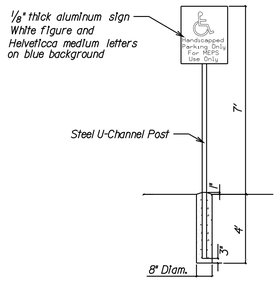

HANDICAPPED PARKING SIGN
NTS

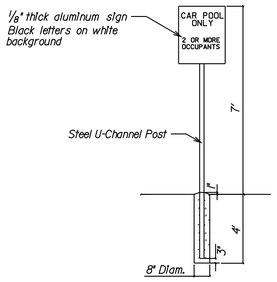

CAR POOL SIGN
NTS

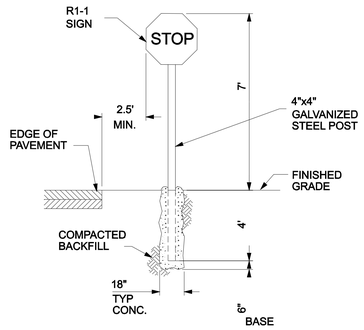

"STOP" SIGN
NTS

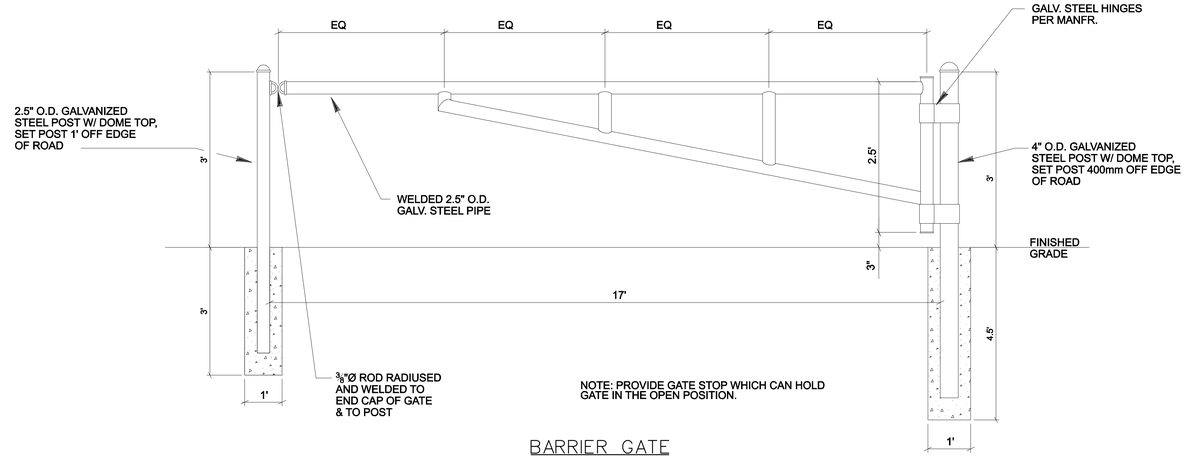

NOTE: PROVIDE GATE STOP WHICH CAN HOLD GATE IN THE OPEN POSITION.

BARRIER GATE
NTS

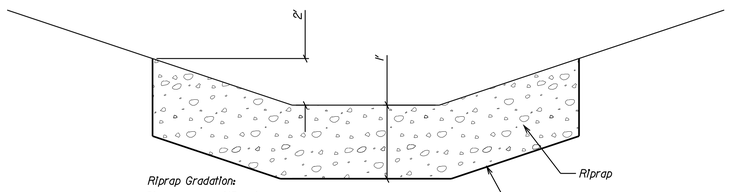

Riprap Gradation:

Size	%Passing
12"	100
9"	100-70
8"	80-50
7"	50-30
5"	15-0

RIPRAP
NTS

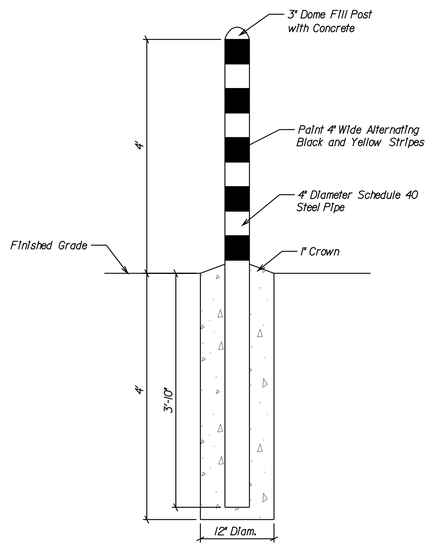

BOLLARD
NTS

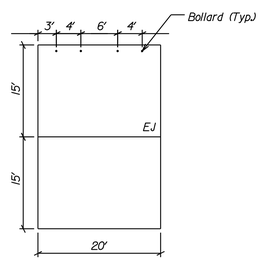

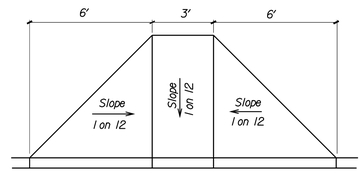

PLAN

HANDICAPPED CURB RAMP
NTS

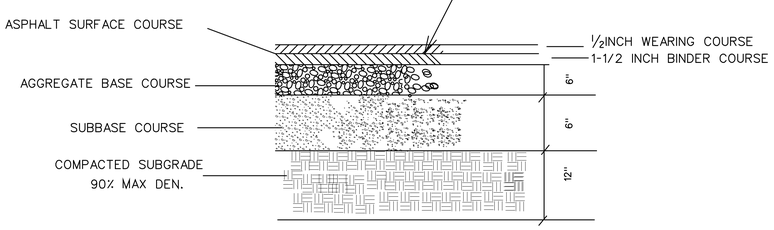

PAVING DETAIL FOR ACCESS ROADS
N.T.S.

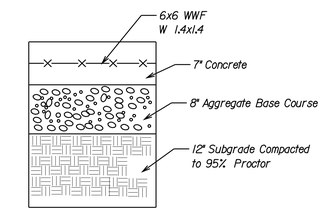

DUMPSTER PAD
NTS

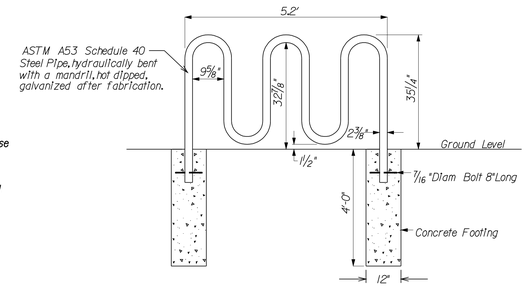

BIKE RACK
NTS

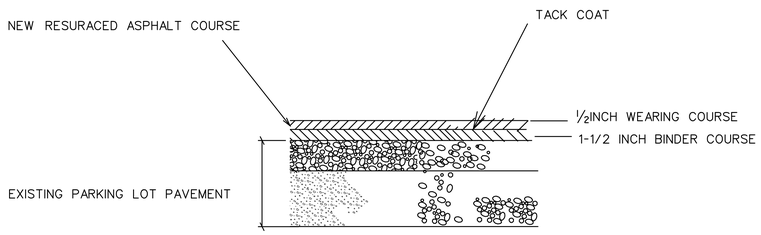

RESURFACING DETAIL FOR PARKING LOT
N.T.S.

NOTE : SEE DETAIL FOR CONTROL JOINTS & EXPANSION JOINTS. COORDINATE CONTRACTION JOINTS WITH STAMP PATTERN

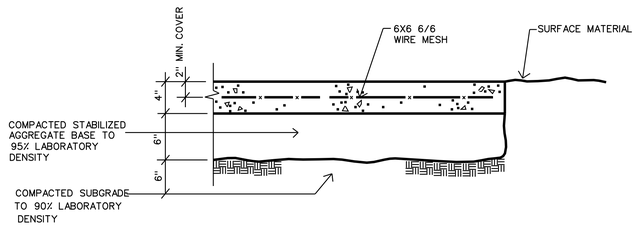

STAMP CONC. DETAIL
N.T.S.

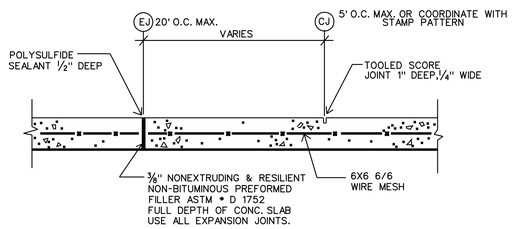

STAMPED CONC. E.J.-C.J. DETAIL
N.T.S.

US Army Corps of Engineers
New York District

Symbol	Description	Date	Appr.
1	AMENDMENT 2 - TACK COAT NOTE	12/09/04	
	90% SUBMISSION	10/14/04	
	60% SUBMISSION	08/30/04	
	15% SUBMISSION	03/19/04	

Designed by: | Date:
Dwn by: | Ckd by: | Drawing file no.:
Reviewed by: | Drawing code:
Submitted by: | Plot date: 9-DEC-2004 09:33 | Plot by: edendorsi | Size: | Rev.:
File name: S:\Benson\military\Niagara Falls\MEPS\Civil\100% submission\meps14.dgn

U.S. ARMY ENGINEER DISTRICT
CORPS OF ENGINEERS
NEW YORK, NEW YORK

PN 58973
MILITARY ENTRANCE PROCESSING STATION (MEPS)
NIAGARA FALLS, NY

SITE DETAILS

Sheet reference number:
C–10

Plot Date: 10-DEC-2004 09:33
Submitted by: edendorsi
Latter:submitter:petitpierre Fail AFBANEP&C:\TAFFICE\TEMP\~$$$.dgn

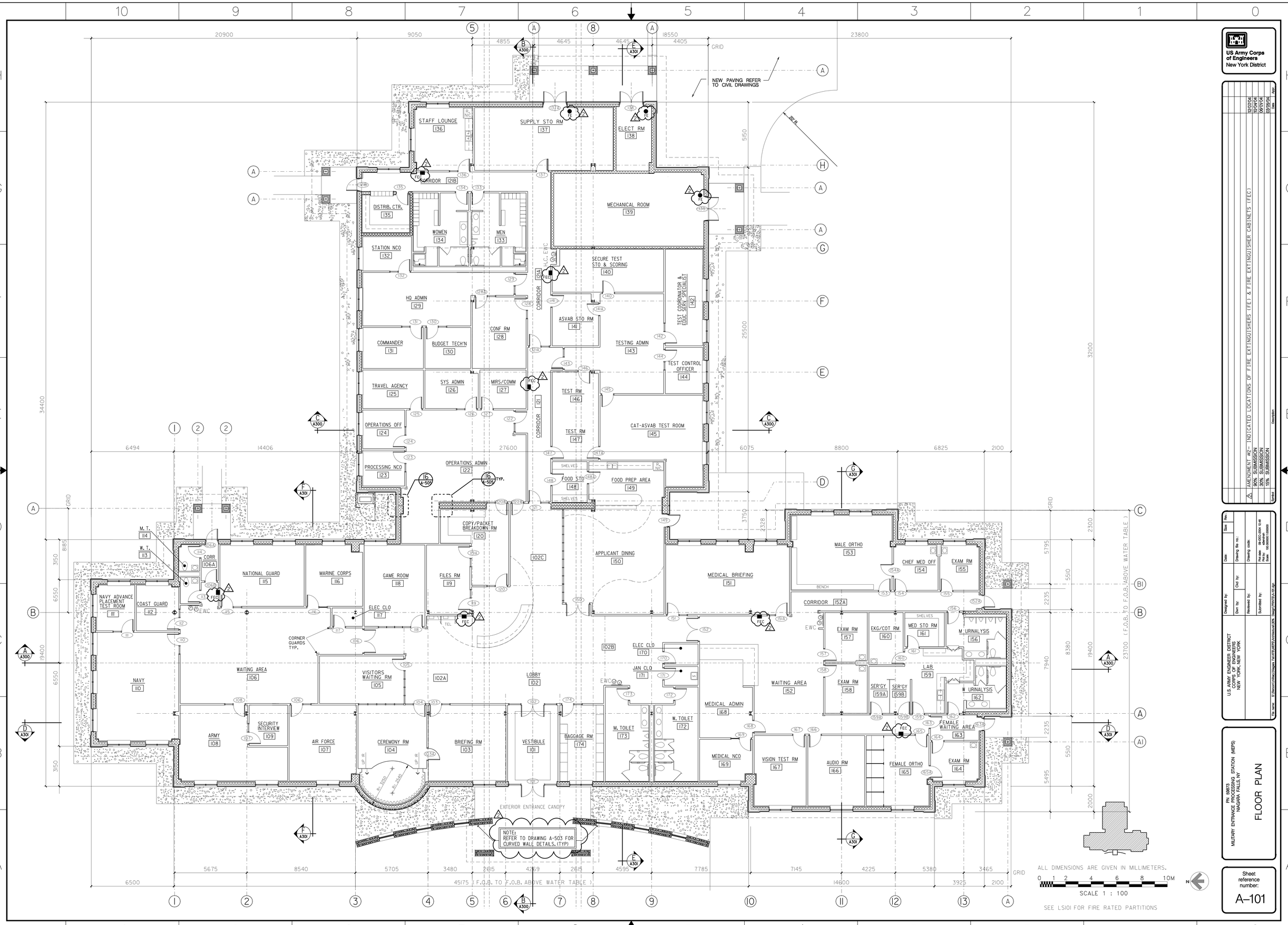

Symbol	Description	Date	Appr.
2	AMENDMENT #2- INDICATED LOCATIONS OF FIRE EXTINGUISHERS (FEC) & FIRE EXTINGUISHER CABINETS (FEC)	12/07/04	
	90% SUBMISSION	10/04/04	
	30% SUBMISSION	08/30/04	
	15% SUBMISSION	07/30/04	

Designed by: | Date: | Size: | Rev.:
Dwn by: | Ckd by: | Drawing file no.:
Reviewed by: | Drawing code:
Submitted by: | Plot date: 09-DEC-2004 12:48 | Plot by: edenomah | Plot file: 100_FP0101.dwg

U.S. ARMY ENGINEER DISTRICT
CORPS OF ENGINEERS
NEW YORK, NEW YORK

File name: S:\Benson\Military\Niagara Falls\MEPS\Architectural\A101_Design(FP0101).dwg

PN 58873
MILITARY ENTRANCE PROCESSING STATION (MEPS)
NIAGARA FALLS, NY

FLOOR PLAN

Sheet reference number:
A-101

Plot Date: 09-DEC-2004 12:48
Submitted by: edenomah
S:\Other\Admin\Niagara Falls AFB\MEPS\Architectural\A101_Design(FP0101).dwg

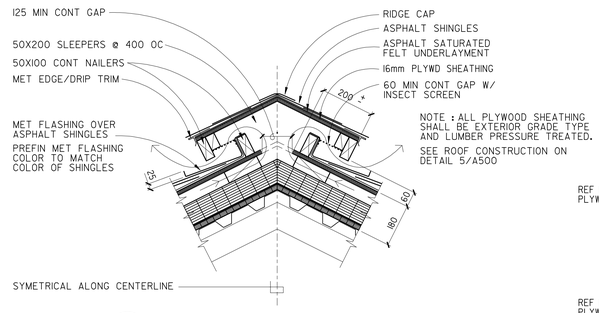

4 RIDGE VENT DETAIL (TYP U.O.N.)
A300 A301 A500 SCALE (6/12 PITCH SHOWN- 4/12 PITCH DET SIM.) 1:10

NOTE:
RIDGE VENT SHOWN IN DETAIL #4 SHALL BE USED ONLY AS INDICATED ON ROOF PLAN, RIDGES OF ROOF.

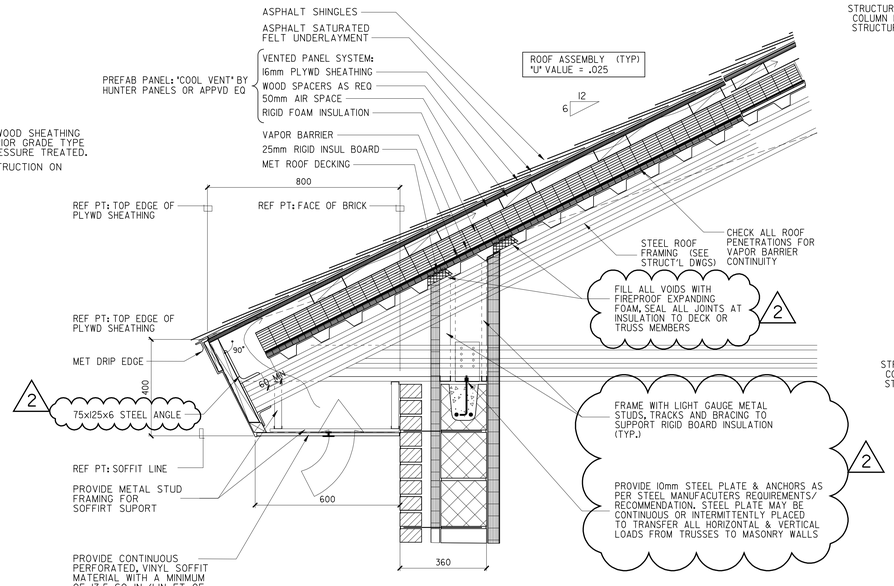

5 ROOF/EAVES DETAIL (TYP U.O.N.)
A500 SCALE (6/12 PITCH SHOWN- 4/12 PITCH DET SIM.) 1:10

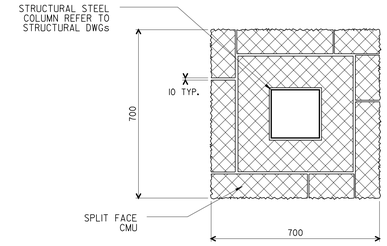

A COLUMN DETAIL (TYP)
A500 SCALE 1:10

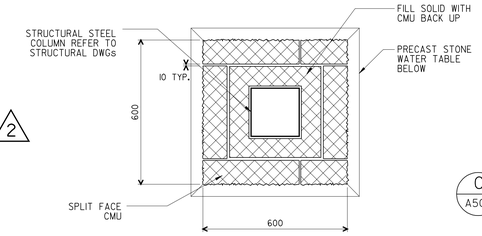

B COLUMN DETAIL (TYP)
A500 SCALE 1:10

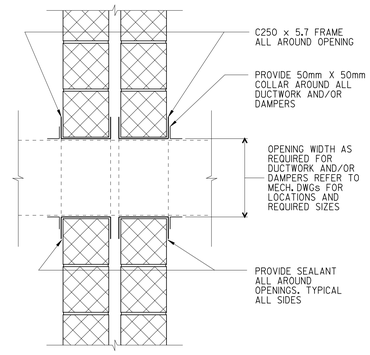

C TYPICAL CHANNEL FRAME AT SEISMIC MASONRY OPENINGS
A500 SCALE 1:10

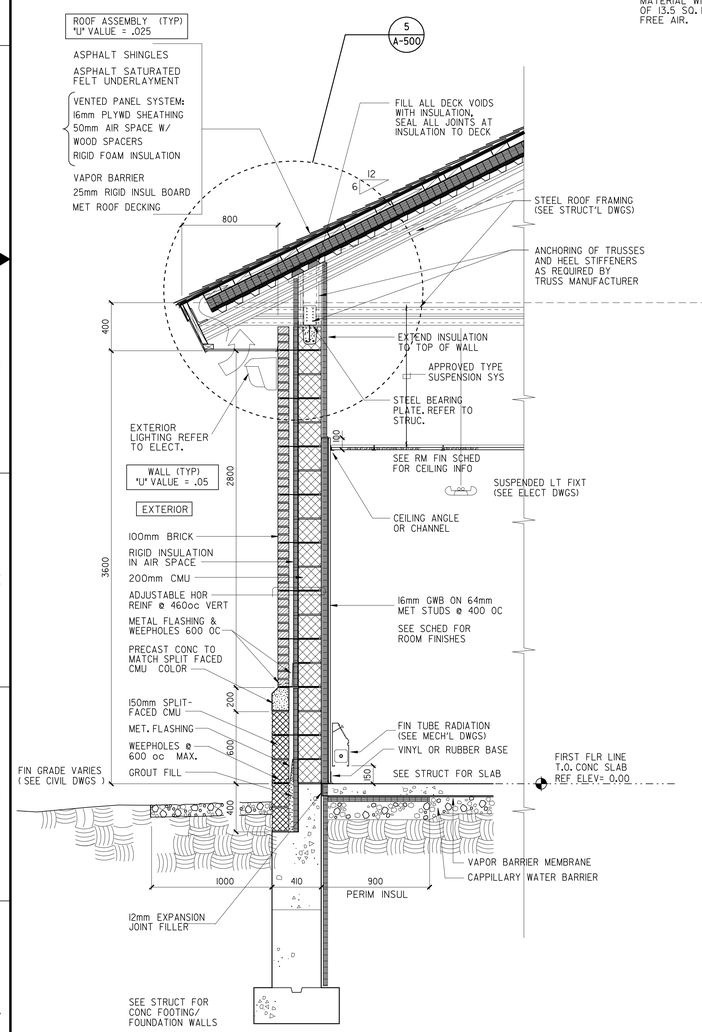

1 TYP. WALL SECTION (U.O.N.)
A300 A301 A500 SCALE 1:20

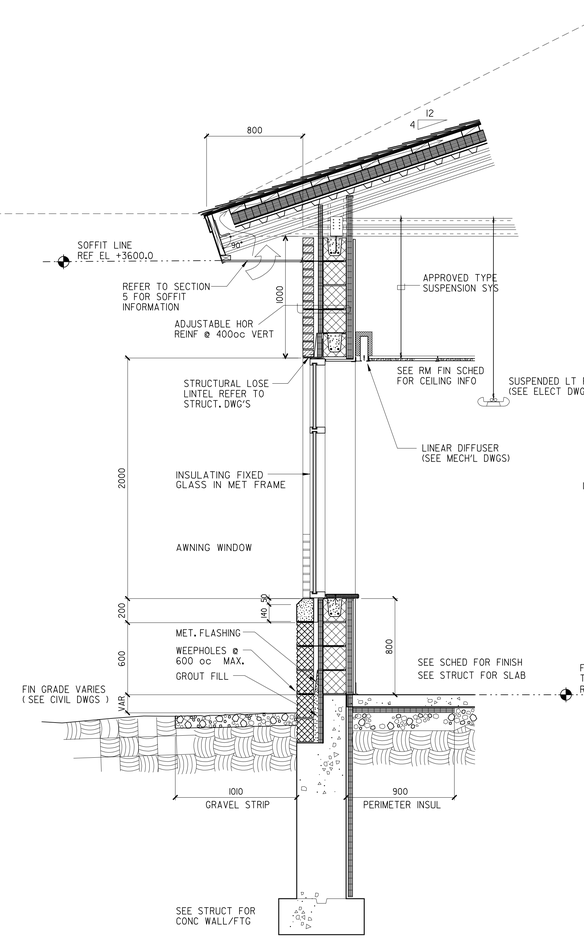

2 TYPICAL WALL SECTION THRU WINDOW (U.O.N.)
A300 A301 A500 SCALE 1:20

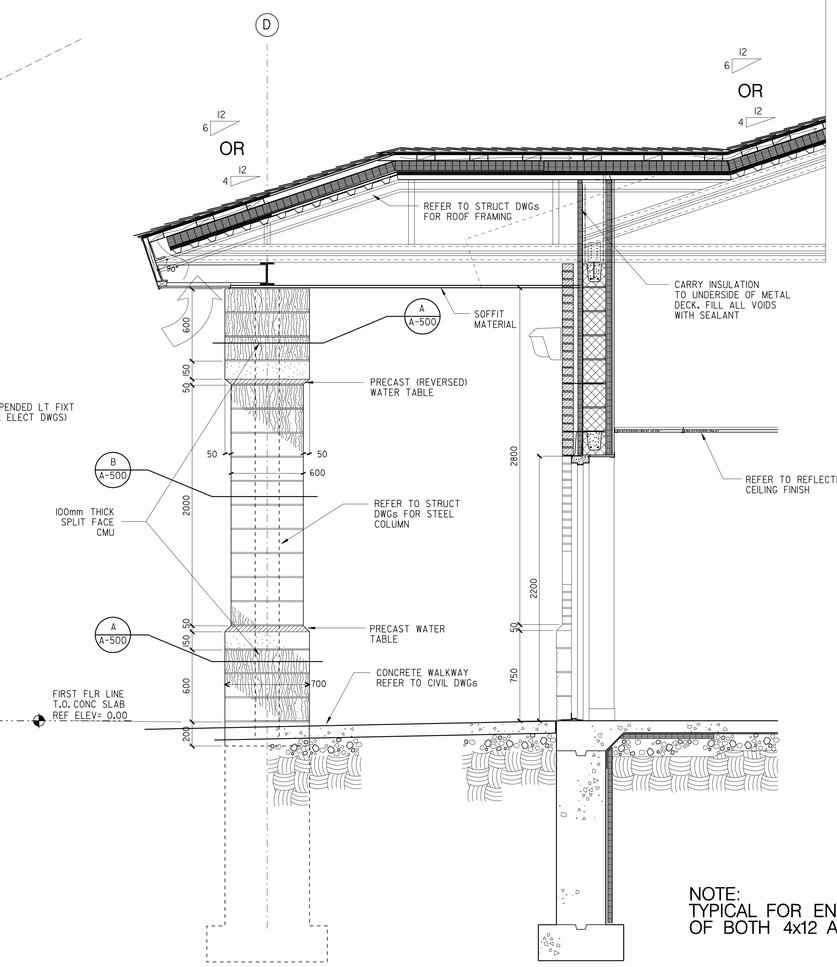

3 TYPICAL WALL SECTION THRU EXT DOOR (U.O.N.)
A300 A301 A500 SCALE 1:20

NOTE:
TYPICAL FOR ENTRANCE WAYS OF BOTH 4x12 AND 6x12 SLOPES

US Army Corps of Engineers
New York District

Symbol	Description	Date	Appr.
2	AMENDMENT #2- ADDED AND/OR REVISED NOTES ON DETAIL #4 AND DETAIL #5	12/07/04	
1	90% SUBMISSION	09/30/04	
	60% SUBMISSION	06/01/04	
	30% SUBMISSION	03/05/04	
	15% SUBMISSION		

U.S. ARMY ENGINEER DISTRICT
FORT PECKHAM (FP-NEW YORK)
NEW YORK, NEW YORK

Designed by: | Date: | Size | Rev.
Dwn by: | Ckd by: | Drawing file no:
Reviewed by: | Drawing code:
Submitted by: | Plot date: 09-DEC-2004 12:49 | Plot file: A-500.dgn | Scale: 20.3729381130000
File name: S:\Benjamin\Military\Niagara_Hydro\MEPS\Architecural\300s Design\PRINTS\A-500.dgn

PN 58873
MILITARY ENTRANCE PROCESSING STATION (MEPS)
NIAGARA FALLS, NY

WALL SECTIONS

Sheet reference number:
A-500

Submitted by: eSendrah
Submitter-admin:Torg-Niagara Fall AFB\MEPS\Architecture\300s Design\PRINTS\A-500.dgn
Plot Date: 09-DEC-2004 12:49

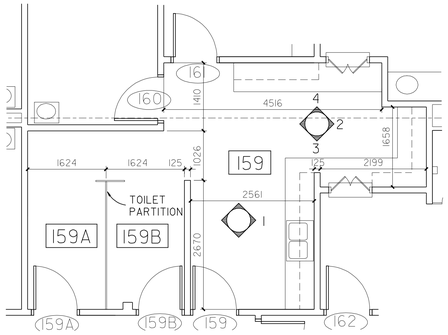

A LABORATORY RM 159
SCALE: 1:20

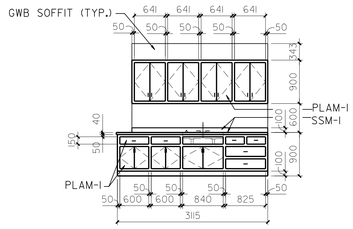

1 LABORATORY RM 159 ELEVATION
SCALE: 1:50

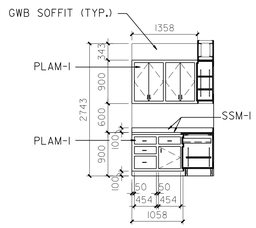

2 LABORATORY RM 159 ELEVATION
SCALE: 1:20

NOTE:
ALL UPPER CABINETRY IN LABORATORY SHALL HAVE PLAM-I FINISH WITH APPROPRIATE HARDWARE AND CABINET LOCKS (TYPICAL).

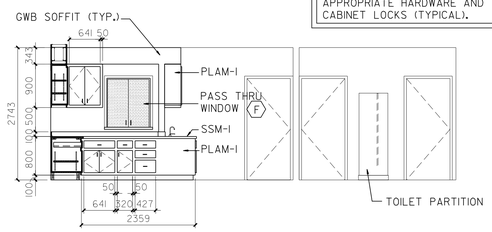

3 LABORATORY RM 159 SEROLOGY RM 159A & 159B
SCALE: 1:20

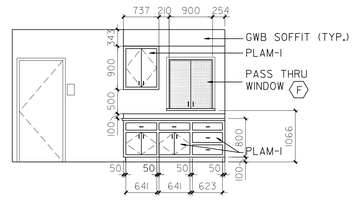

4 LABORATORY RM 159 ELEVATION
SCALE: 1:20

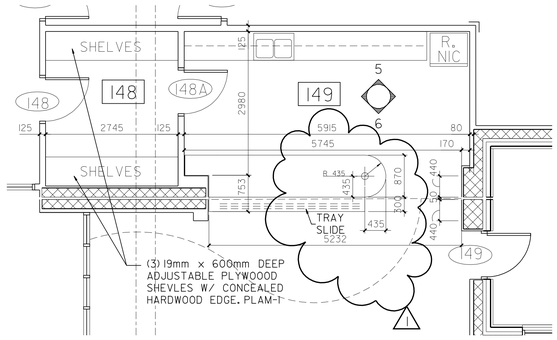

B FOOD PREP AREA 149 & FOOD STORAGE ROOM 148
SCALE: 1:20

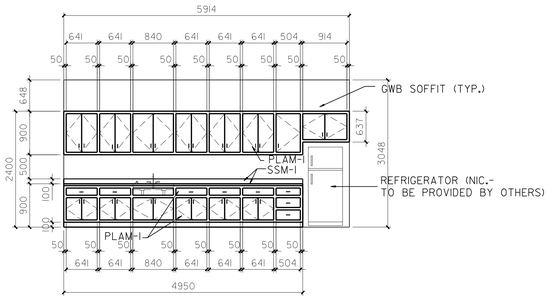

5 FOOD PREP AREA 149 ELEVATION
SCALE: 1:20

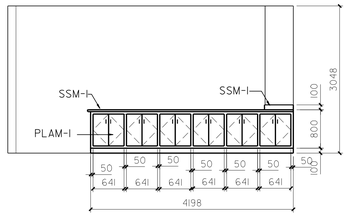

6 FOOD PREP AREA 149 ELEVATION
SCALE: 1:20

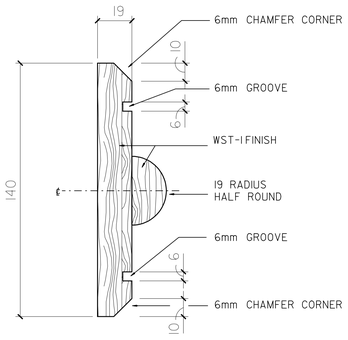

9 WOOD CHAIR RAIL SECTION
SCALE: NTS

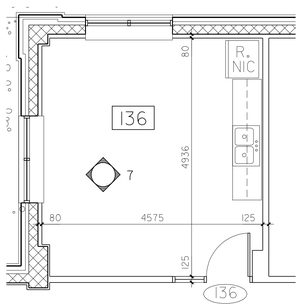

C STAFF LOUNGE ROOM 136
SCALE: 1:20

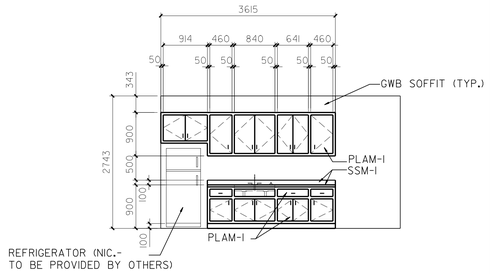

7 STAFF LOUNGE ROOM 136 ELEVATION
SCALE: 1:20

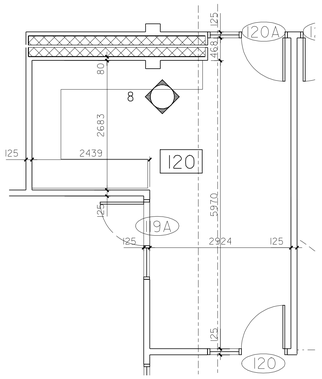

D COPY/PACKET BREAKDOWN ROOM 120
SCALE: 1:20

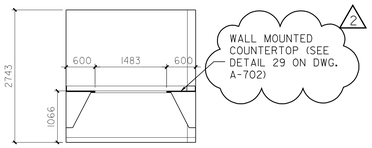

8 COPY/PACKET BREAKDOWN ROOM 120 ELEVATION
SCALE: 1:20

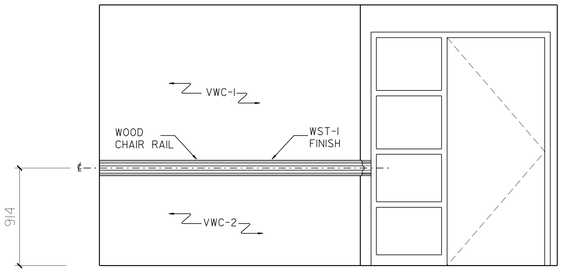

10 LOCATION OF CHAIR RAIL (TYP.) ELEVATION
SCALE: NTS

US Army Corps of Engineers
New York District

Symbol	Description	Date	Appr.
3	AMENDMENT #2- REVISED NOTE ON ELEVATION #8	12/07/04	
2	AMENDMENT #1- REVISED COUNTERTOP FOR FOOD PREP AREA 149, DELETE NOTE FOR STEAM TABLE	12/02/04	
	90% SUBMISSION	10/14/04	
	60% SUBMISSION	06/30/04	
	35% SUBMISSION	03/19/04	

U.S. ARMY ENGINEER DISTRICT
CORPS OF ENGINEERS
NEW YORK, NEW YORK

Designed by: | Date: | Size: | File:
Dwn by: | Ckd by: | Drawing file no.:
Reviewed by: | Drawing code:
Submitted by: | Plot date: 09-DEC-2004 12:49 | Plot by: eblancner | Plotter: \\10.0.0.0\\10.0.0.0\xxxx

File name: S:\Mercury\Military\Niagara Falls\AE\MEPS\Architectural\DWG Design\PHASE\A-700.dgn

MILITARY ENTRANCE PROCESSING STATION (MEPS)
NIAGARA FALLS, NY

PN 58873

ENLARGED CASEWORK PLANS & DETAILS

Sheet reference number:
A–700

Submitted by: e3endnsh
pathfinderutility:pwNiagara Falls AE\MEPS\Architectural\DWG Design\PHASE\A-700.dgn Plot Date: 09-DEC-2004 12:49

GENERAL NOTES:

DESIGN LOADS

SNOW LOAD	
GROUND SNOW LOAD	2.2 KN/M^2
FLAT ROOF SNOW LOAD	1.6 KN/M^2
UNBALANCED SNOW LOAD	2.6 KN/M^2
FROST DEPTH	1,500 MM
WIND LOAD	
BASIC WIND SPEED	44.7 M/S
SOIL BEARING CAPACITY	168 KN/M^2

SEISMIC
BUILDING CLASSIFICATION: II
SEISMIC USE GROUP: I
SITE CLASSIFICATION: D
Ss = .31G
S1=.067G

REINFORCED CONCRETE:

CONCRETE	30 MPa - FOUNDATION WALL AND FOOTINGS
CONCRETE	25 MPa @ 28 DAYS, NORMAL WEIGHT: SLAB ON GRADE
REINFORCING	ASTM A615 GRADE 60
WELDED WIRE FABRIC	ASTM A185

1. CONCRETE WORK SHALL CONFORM TO ACI 318-02, "BUILDING CODE REQUIREMENTS FOR REINFORCED CONCRETE".
2. MINIMUM OF 72 HOURS SHALL ELAPSE BETWEEN ADJACENT CONCRETE PLACEMENTS SEPARATED BY CONSTRUCTION JOINTS.
3. REINFORCING LAP SPLICES SHALL BE PLACED ONLY WHERE INDICATED OR CALLED FOR UNLESS OTHERWISE APPROVED BY THE CONTRACTING OFFICER.
4. MINIMUM COVER FOR CONCRETE REINFORCEMENT:EXPOSED TO EARTH OR WEATHER - 38 MM
   CAST AGAINST AND PERMANENTLY EXPOSED TO EARTH - 75MM

STRUCTURAL STEEL:

SHAPES, PLATES, BARS	ASTM A36
HIGH STRENGTH BOLTS	ASTM A325 - MIN. 3/4" DIAM.
WELDING	AWS D1.1.E70XX
ANCHOR BOLTS	ASTM 307, GRADE A

1. STRUCTURAL STEEL WORK SHALL CONFORM TO THE AISC "SPECIFICATION FOR STRUCTURAL STEEL BUILDINGS - ALLOWABLE STRESS DESIGN (ASD)
2. ALL GROOVE WELDS SHALL BE FULL PENETRATION.
3. WHERE FILLET WELD SIZE IS NOT SHOWN, MINIMUM SIZE SHALL BE 5MM.
4. ALL WELDS SHALL BE SHOP WELDS (TYPICAL UNLESS OTHERWISE SHOWN OR APPROVED).

ROOF TRUSS FRAMING SYSTEM:

THE ROOF TRUSS FRAMING SYSTEM SHALL BE PREFABRICATED AS PER PERFORMANCE SPECIFICATION SECTION 05425

OPEN WEB STEEL JOISTS ATTIC FLOOR:

TYPE K SERIES
1. OPEN WEB JOISTS SHALL CONFORM TO THE STEEL JOIST INSTITUTE STANDARD SPECIFICATIONS FOR OPEN WEB STEEL JOIST K SERIES
2. MANUFACTURER SHALL VERIFY JOIST SIZES SHOWN ARE ADEQUATE AT THE SPANS INDICATED ON THE PLAN. JOIST CHORDS AND WEB MEMBERS SHALL BE INCREASED IN SIZE AS REQUIRED.
3. MANUFACTURER SHALL VERIFY JOIST SIZES SHOWN ARE ADEQUATE TO SUPPORT MECHANICAL EQUIPMENT AND DUCTWORK AS INDICATED ON MECHANICAL DRAWINGS. VERIFY LOADING OF EQUIPMENT TO BE INSTALLED AT THEIR APPROPRIATE LOCATION.

METAL DECKS:

DEPTH: 38mm

1. DECKS SHALL CONFORM TO THE "SPECIFICATIONS FOR THE DESIGN OF COLD FORMED STEEL STRUCTURAL MEMBERS" 1997 (AISI) AND TO THE "DESIGN MANUAL FOR COMPOSITE DECKS, ROOF DECKS, AND CELLULAR METAL FLOOR DECK WITH ELECTRICAL DISTRIBUTION," PUBLICATION NO. 29, 1995 (SDI).
2. ROOF DECK SHALL BE ATTACHED TO STEEL SUPPORTS WITH 19mm DIA. PUDDLE WELDS @ 305mm o.c. SIDE SEAMS TO BE BUTTON PUNCHED @ 305mm o.c.
3. ROOF DECK SHALL BE DESIGNED AS A DIAPHRAGM.

REINFORCED MASONRY:

CONCRETE MASONRY UNITS	ASTM C90 GRADE N-1 NORMALWEIGHT UNITS
MORTAR	ASTM C270 TYPE S
JOINT REINFORCEMENT	LADDER TYPE FOR CAVITY WALLS, TRUSS TYPE FOR SINGLE WYTHE WALLS

1. HORIZONTAL JOINT REINFORCEMENT SHALL BE EXTRA HEAVY 5MM SIDE RODS, NO. 9 GAGE CROSS RODS.
2. LAP SPLICES SHALL BE THE GREATER OF 40 BAR DIAMETERS OR 610 MM O.C. LAP SPLICES SHALL BE STAGGERED.
3. ALL CELLS RECEIVING ANCHOR BOLTS SHALL BE GROUTED SOLID 2 COURSES VERTICALLY MIN.
4. CMU WALLS SHALL HAVE A BOND BEAM WITH 2-#16 AT THE BOTTOM COURSE, TOP COURSE OR NEXT TO THE TOP COURSE.
5. LINTELS SHALL HAVE A MINIMUN 200 MM BEARING EACH SIDE. STEEL LINTELS EXPOSED TO WEATHER SHALL BE GALVANIZED.
6. OPENINGS IN CMU WALLS SHALL BE REINFORCED WITH 2-#16 VERTICAL ON EACH SIDE OF OPENING FOR FULL HEIGHT OF WALL, AND 2-#16 HORIZONTAL AT TOP AND BOTTOM EXTENDING 610 MM PAST OPENING. LINTEL BARS ABOVE THE OPENING MAY SERVE AS THE HORIZONTAL BARS. CELLS WITH REBARS MUST BE FILLED WITH GROUT.
7. AT EACH SIDE OF A CONTROL JOINT PROVIDE 2-#16 VERTICAL FOR FULL HEIGHT OF WALL. FOR LOCATIONS AND DETAIL OF CONTROL JOINTS SEE ARCHITECTURAL DRAWINGS.
8. ALL MASONRY REINFORCEMENT SHALL BE PLACED USING WIRE CENTERING AND CAGING CLIPS TO ENSURE PROPER SPACING.
9. VERTICAL REINFORCEMENT IN ALL EXTERIOR MASONRY WALLS AS WELL AS THE SEISMIC WALLS SHALL BE #19 @ 610 mm O.C. ALL CELLS FULLY GROUTED. (2)
10. PROVIDE HORIZONTAL SHEAR REINFORCEMENT, 2#16 @ 915 mm O.C. WHERE NOTED ON DWG. S-108.
11. VERTICAL REINFORCEMENT IN INTERIOR MASONRY WALLS SHALL BE #16 @ 1220 mm O.C.

US Army Corps of Engineers
New York District

Symbol	Description	Date	Appr.
2	AMENDMENT 2, CLARIFIED MASONRY REINFORCEMENT NOTES.	12/09/04	
	90% SUBMISSION	10/14/04	
	60% SUBMISSION	06/09/04	
	15% SUBMISSION	03/30/04	

U.S. ARMY ENGINEER DISTRICT
CORPS OF ENGINEERS
NEW YORK, NEW YORK

Designed by: | Date: | Size: | Rev.:
Dwn by: | Ckd by: | Drawing file no.:
Reviewed by: | Drawing code:
Submitted by: | Plot date: 09-DEC-2004 10:49 | Plot by: admcrum | Scale: SCALE(S)(22x34)

File name: S:\Benson\military\Niagara_Falls\MEPS\Structural\MEPS_S-001.dgn

PN 59873
MILITARY ENTRANCE PROCESSING STATION (MEPS)
NIAGARA FALLS, NY

GENERAL NOTES

Sheet reference number:
S–001

Submitted by: e3engnash
Saf1fsr:admin1fsr:p4fsr:pw:Niagara Fall: AFB4MEP:p4fsr:Structural:MEPS_S-001.dgn
Plot Date: 09-DEC-2004 12:49

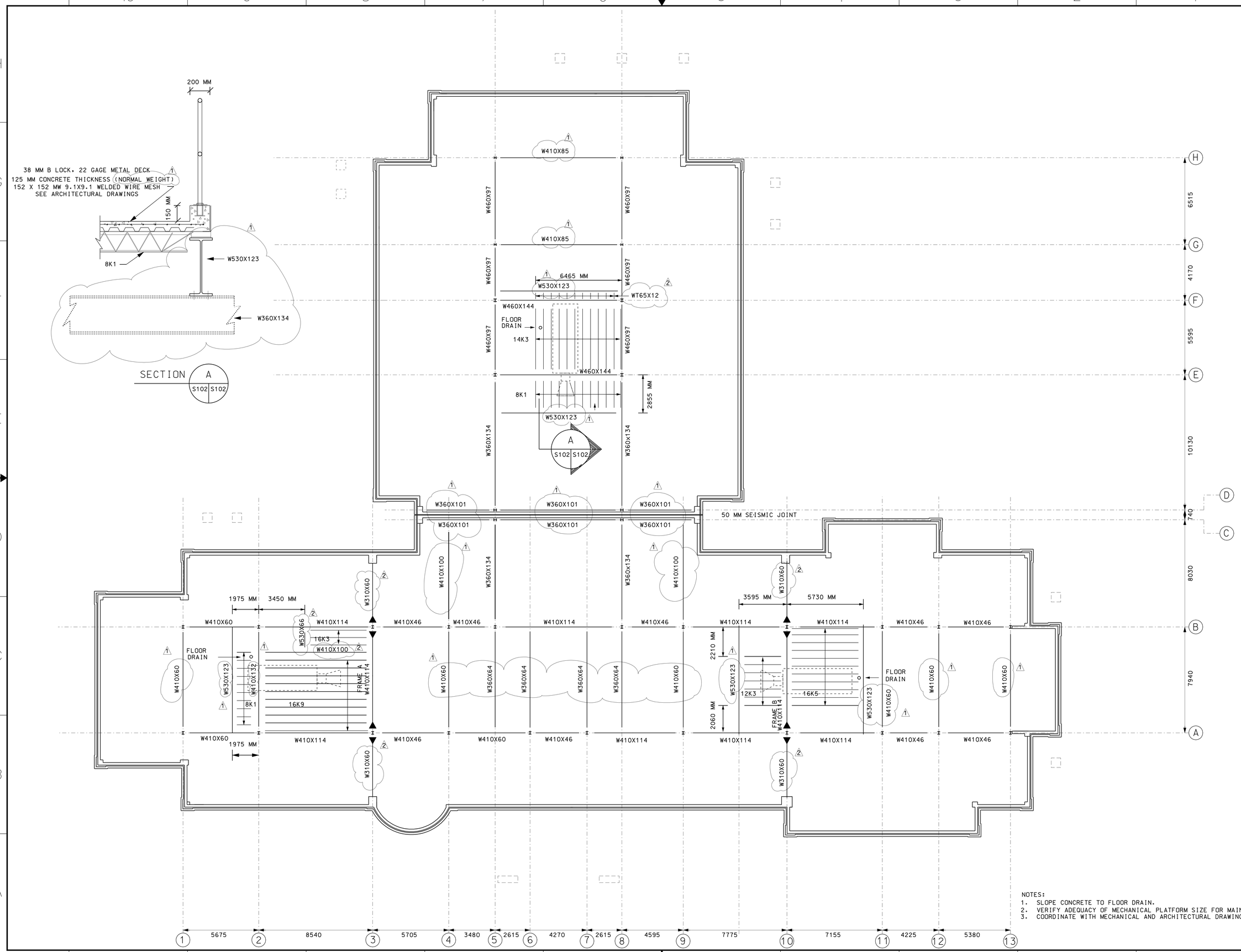

NOTES:
1. SLOPE CONCRETE TO FLOOR DRAIN.
2. VERIFY ADEQUACY OF MECHANICAL PLATFORM SIZE FOR MAINTENANCE.
3. COORDINATE WITH MECHANICAL AND ARCHITECTURAL DRAWINGS.

US Army Corps of Engineers
New York District

Symbol	Description	Date	Appr.
2	AMENDMENT 2 – INCORPORATED ADDITIONAL BEAM SIZES	12/09/04	
1	AMENDMENT 1 – INCORPORATED ADDITIONAL BEAM SIZES	12/02/04	
	90% SUBMISSION	10/14/04	
	60% SUBMISSION	09/07/04	
	15% SUBMISSION	03/30/04	

U.S. ARMY ENGINEER DISTRICT
CORPS OF ENGINEERS
NEW YORK, NEW YORK

Designed by: JAL
Dwn by: JAL
Ckd by:
Reviewed by:
Submitted by:
Date:
Drawing file no.:
Drawing code:
Plot date: 09-DEC-2004 12:49
Plot by: eberdman
Scale: 1/8"=1'0"
Size:
Rev.:

File name: S:\Mercer\Military\Images\NIAGARA\MEPS\Structural\MEPS S-102.dgn

MILITARY ENTRANCE PROCESSING STATION (MEPS)
NIAGARA FALLS, NY

PN 58873

STEEL FRAMING PLAN

Sheet reference number:
S–102

Submitted by: eberdman
pattersondentlicp pwlogan's Edit MEPS\Structural\MEPS S-102.dgn Plot Date: 09-DEC-2004 12:49

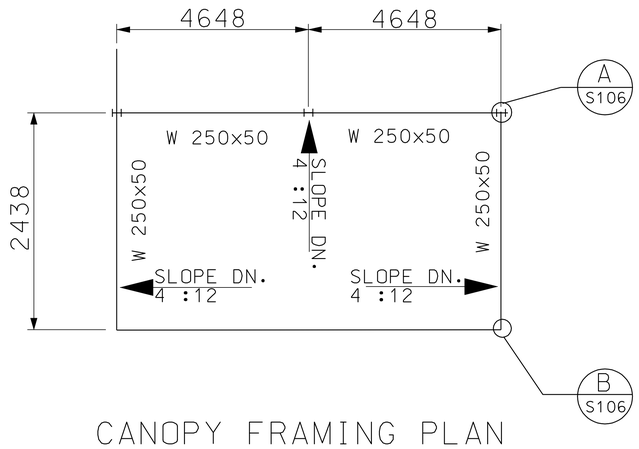

CANOPY FRAMING PLAN
REAR ENTRANCE

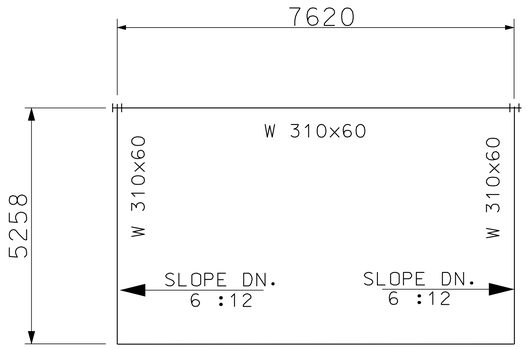

CANOPY FRAMING PLAN
FRONT ENTRANCE

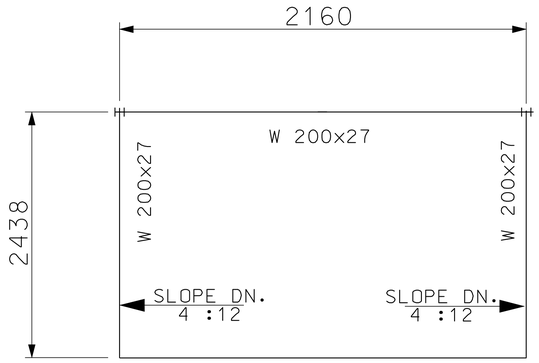

CANOPY FRAMING PLAN
SIDE ENTRANCES (SEE ARCH.)

FOOTING TYPE
760 mm X 760 mm X 150 mm
#19 @ 305 mm o.c.e.w.

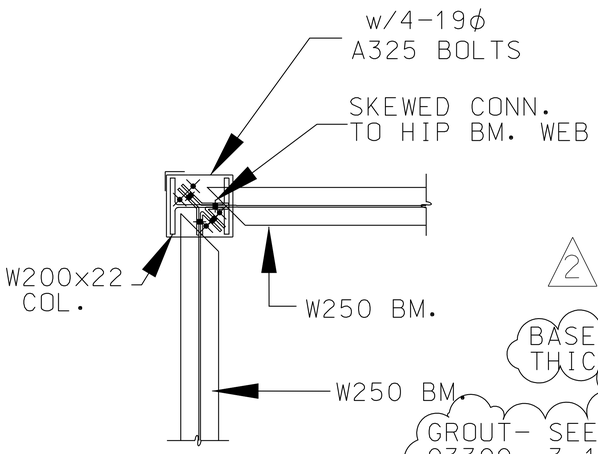

CONNECTION DETAIL (A S106)
SCALE: NTS

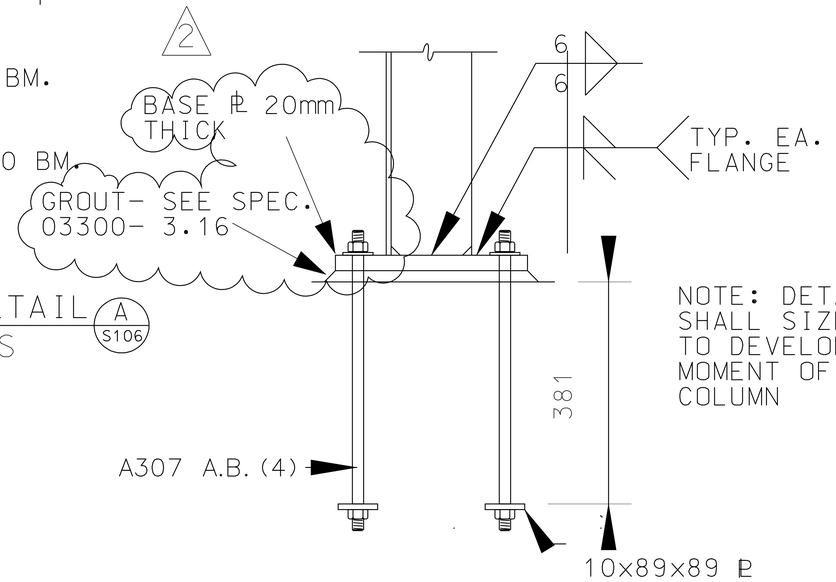

NOTE: DETAILER SHALL SIZE WELDS TO DEVELOP FULL MOMENT OF COLUMN

COLUMN BASE PLATE TYPE
SCALE: NTS

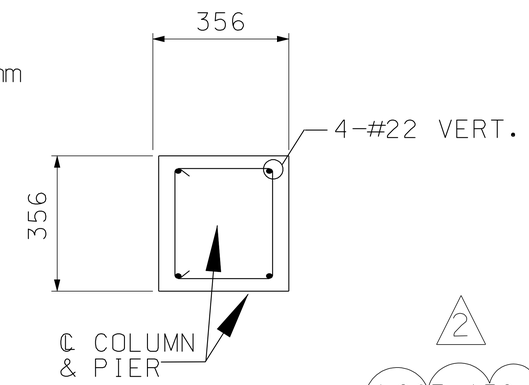

PIER TYPE
SCALE: NTS

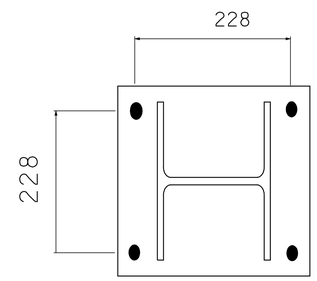

BASE PLATE DETAIL
SCALE: NTS

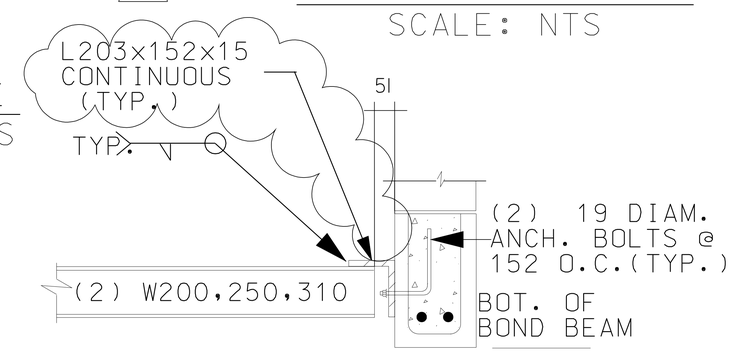

NOTES:
1. COORDINATE ALL ELEVATIONS WITH ARCH. DWGS.
2. FACING BRICK NOT SHOWN FOR CLARITY SEE ARCH. DWGS.
3. FULLY GROUT MASONRY EXTERIOR WALL AT CANOPY ANCHORAGE LOCATIONS, USE #22 BARS VERT. @ 203". EXTEND MIN. 2 CELLS ON EITHER SIDE OF ANCHORAGE BOLTS WHERE REQ'D. LINTELS MAY SERVE AS CANOPY ACHORAGE AS REQUIRED.

TYPICAL CANOPY ANCHORAGE DETAIL (B S106)
SCALE: NTS

US Army Corps of Engineers
New York District

Symbol	Description	Date	Appr.
2	AMENDMENT TO CANOPY DETAILS	12/09/04	
	90% SUBMISSION	10/04/04	
	60% SUBMISSION	08/06/04	
	15% SUBMISSION	03/19/04	

Designed by: | Date: | Size: | Rev:
Dwn by: | Ckd by: | Drawing file no:
Reviewed by: | Drawing code:
Submitted by: | Plot date: 09-DEC-2004 12:49 | Plot by: | Scale: NTS | File: S106.dgn
File name: S:\Niagara\Niagara Fall AFB\MEPS\Structural\MEPS S106.dgn

U.S. ARMY ENGINEER DISTRICT
CORPS OF ENGINEERS
NEW YORK, NEW YORK

PN 58873
MILITARY ENTRANCE PROCESSING STATION (MEPS)
NIAGARA FALLS, NY

CANOPY DETAILS

Sheet reference number:
S-106

Submitted by: aJendrush
pw:\\crd-exwhite\ny-pw\Niagara Fall AFB\MEPS\Structural\MEPS S106.dgn
Plot Date: 09-DEC-2004 12:49