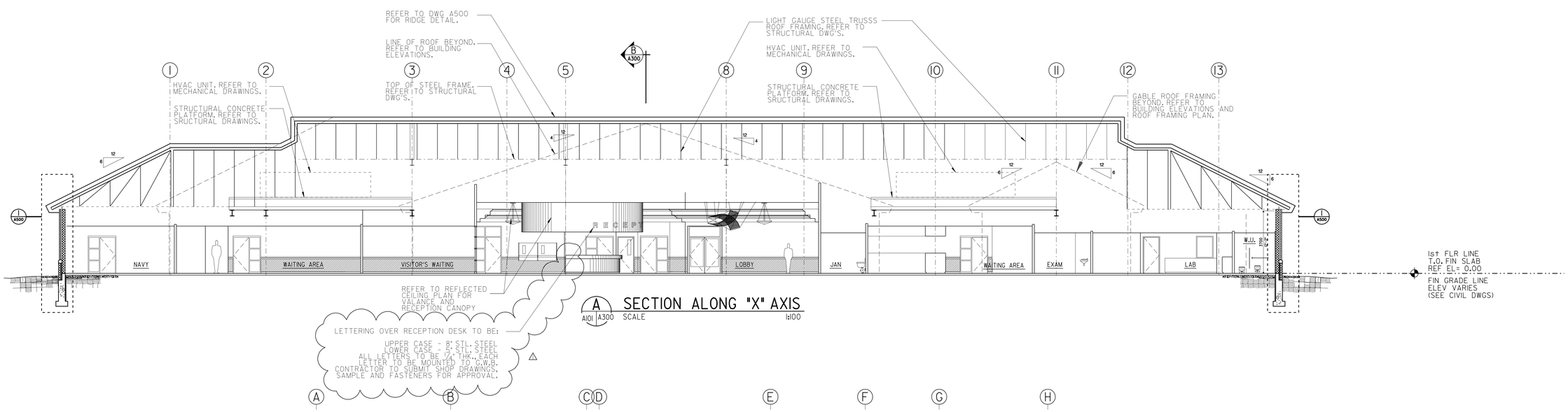

A SECTION ALONG "X" AXIS
A101 A300 SCALE 1:100

NOTE:
ACCENT CANOPIES ARE AN OPTIONAL ITEM. COLOR SELECTION AND LOCATION SHALL BE DETERMINED BY ARCHITECT.

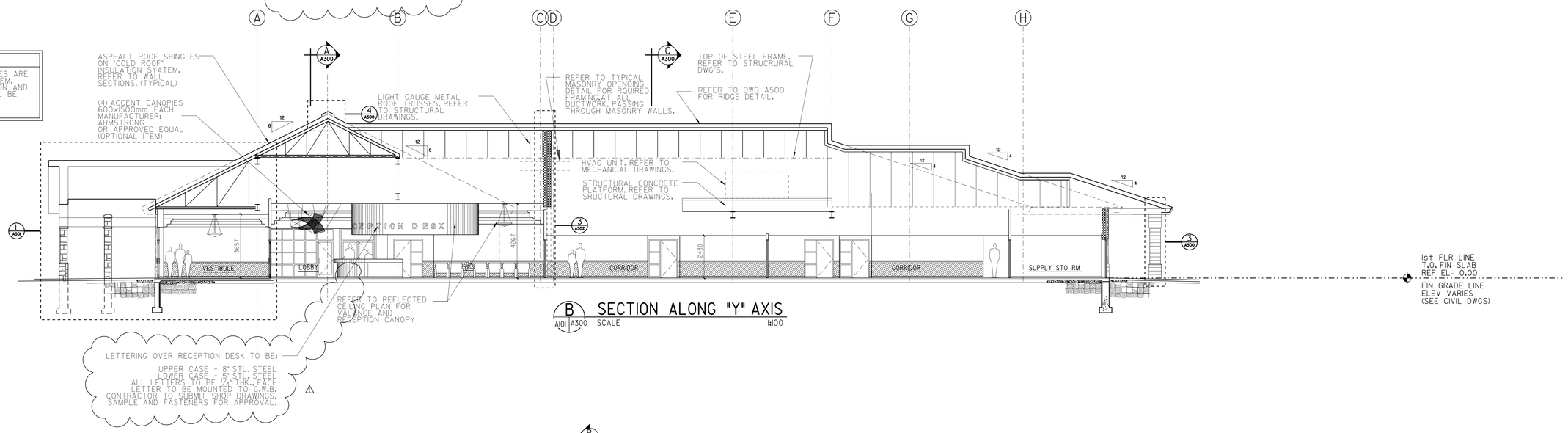

B SECTION ALONG "Y" AXIS
A101 A300 SCALE 1:100

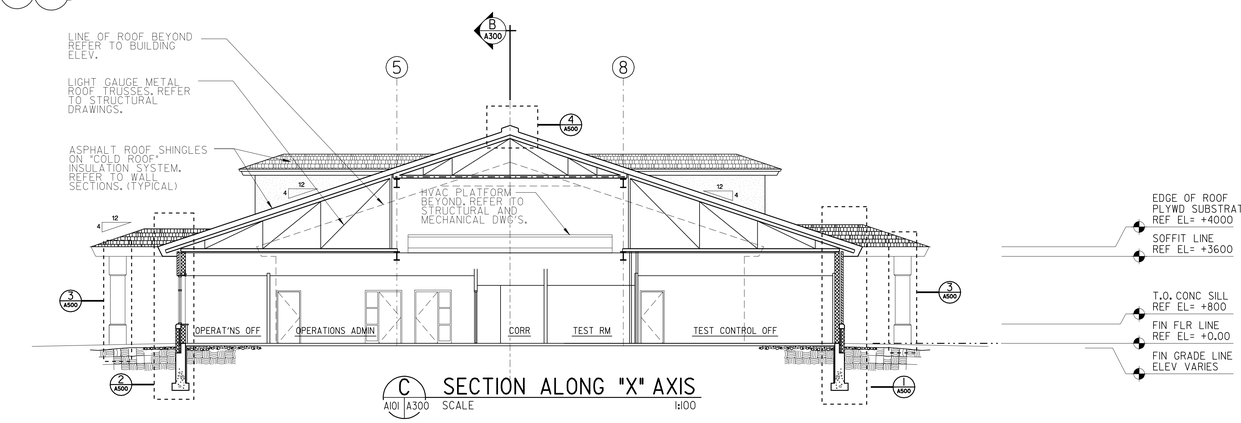

C SECTION ALONG "X" AXIS
A101 A300 SCALE 1:100

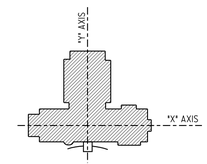

KEY PLAN
SCALE: NONE

ALL DIMENSIONS ARE GIVEN IN MILLIMETERS.
0 1 2 4 6 8 10M
SCALE 1 : 100

US Army Corps of Engineers
New York District

Rev.	Date	Description	Appr.
	12/14/04	ADDED LETTERING NOTE TO SECTIONS	
	10/04/04	90% SUBMISSION	
	08/30/04	35% SUBMISSION	
	07/30/04	35% SUBMISSION	

Submitted

Size: Rev:
Date:
Designed by:
Drawing file no.:
Drawing code:
Dwn by: Ckd by:
Reviewed by:
Plot date: 14-DEC-2004 16:13
Plot by: eJohnson
Submitted by: ejohnson
File name: S:\Division\Military\Niagara Falls\MILMEPS\Architectural\DWG Design\PRINTS\A-300.dgn

U.S. ARMY ENGINEER DISTRICT
CORPS OF ENGINEERS
NEW YORK, NEW YORK

PN 58873
MILITARY ENTRANCE PROCESSING STATION (MEPS)
NIAGARA FALLS, NY

BUILDING SECTIONS

Sheet reference number:
A–300

Plot Date: 14-DEC-2004 16:13
Submitted by: eJohnson
Settings:coadmin1\arpublicgrp\Figure 6 Foil AEDBASE\Sae\architecture\DWG Design\PRINTS\A-300.dgn

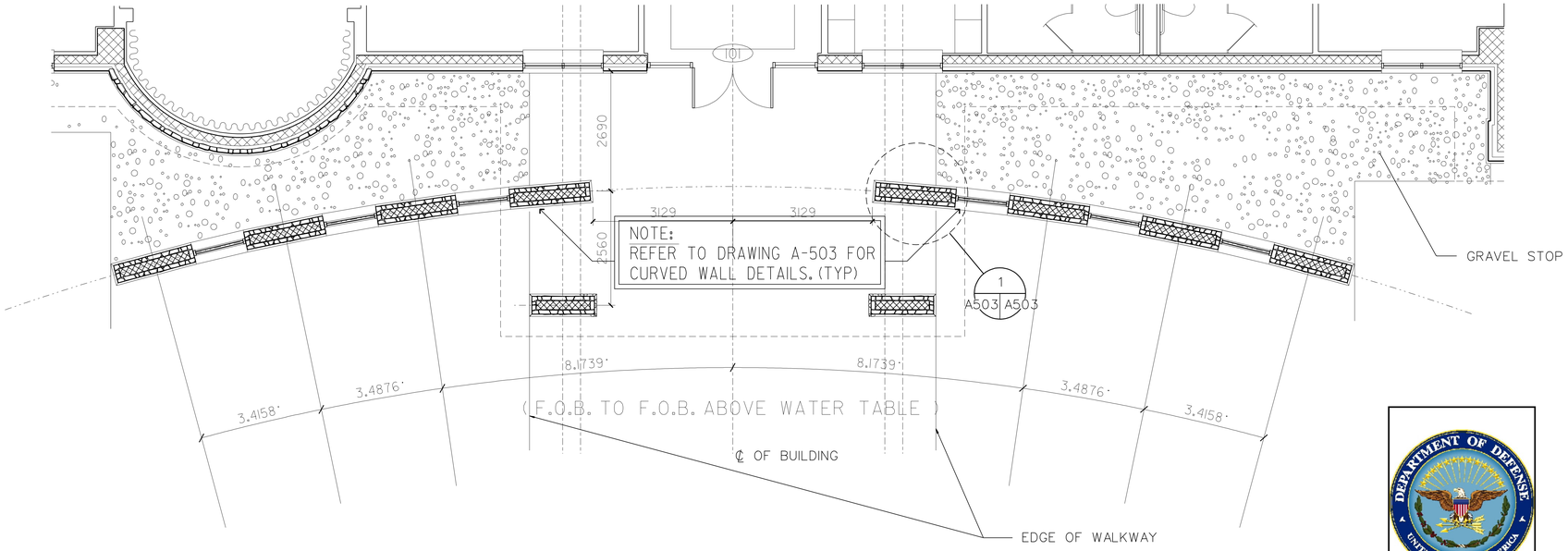

A
A503
ENLARGED ENTRANCE CANOPY PLAN
SCALE: 1:100

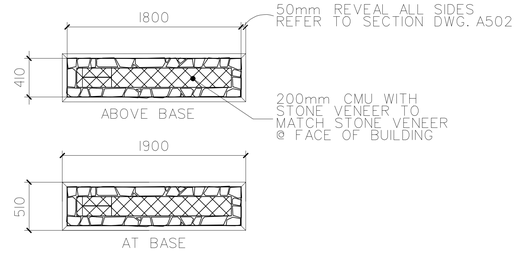

1
A503
COLUMN @ CURVED WALL DETAIL
SCALE: 1:50

DEPT. OF DEFENSE EMBLEM

ARMY EMBLEM

MARINE CORPS EMBLEM

NAVY EMBLEM

AIRFORCE EMBLEM

COAST GUARD EMBLEM

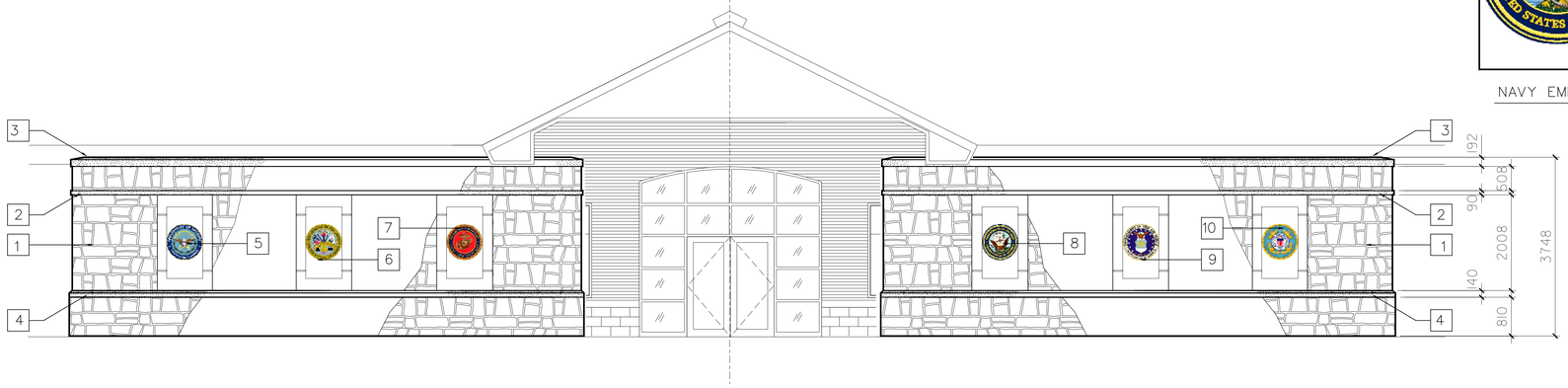

B
A503
CURVED WALL ELEVATION
SCALE: 1:100

C
A503
SERVICE EMBLEMS
SCALE: NTS

NOTE:
COLOR SELECTION FOR PANELS SHALL BE PROVIDED BY GOVERNMENT

CURVED WALL MATERIAL LEGEND

1. *STONE VENEER*
   MANUFACTURER : ARRISCRAFT INTERNATIONAL
   COLLECTION: CITADEL
   COLOR: DESERT BROWN
2. *PRECAST CONCRETE TRIM*
   COLOR TO MATCH STONE VENEER
3. *PRECAST CONCRETE TRIM*
   COLOR TO MATCH STONE VENEER
4. *PRECAST STONE SILL*
   COLOR TO MATCH STONE VENEER
5. *DEPARTMENT OF DEFENSE PANEL*
6. *ARMY PANEL*
7. *MARINE CORPS PANEL*
8. *NAVY PANEL*
9. *AIRFORCE PANEL*
10. *COAST GUARD PANEL*

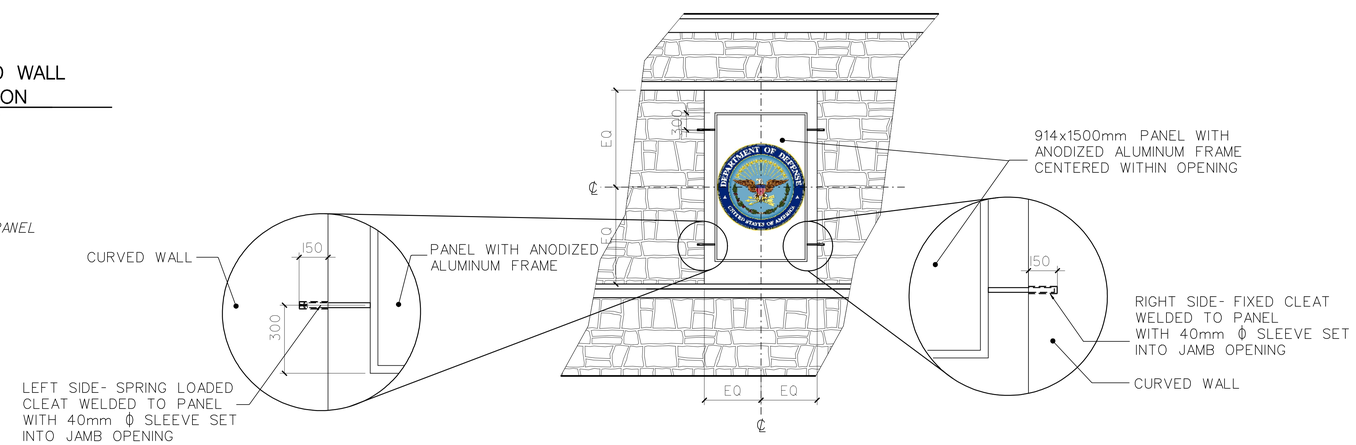

US Army Corps of Engineers
New York District

Symbol	Description	Date	Appr.
1	90% SUBMISSION	12/14/04	
2	90% SUBMISSION	10/04/04	
3	35% SUBMISSION	08/10/04	
4	15% SUBMISSION		
5	AS NOTED		

U.S. ARMY ENGINEER DISTRICT
CORPS OF ENGINEERS
NEW YORK, NEW YORK

Designed by: | Date: | Size: | Rev.
Dwn by: | Ckd by: | Drawing file no.:
Reviewed by: | Drawing code:
Submitted by: | Plot date: 14-DEC-2004 16:13 | Plot by: eldjmwe | Scale: NTS | Sc.0000000000000

File name: S:\Services\military\Niagara Falls\MEPS\Architecture\A-503\ Design\WINSTA-A503.dgn

PN 59573
MILITARY ENTRANCE PROCESSING STATION (MEPS)
NIAGARA FALLS, NY

CURVE WALL DETAILS

Sheet reference number:
A–503

Submitted by: eldjmwe
Plot Date: 14-DEC-2004 16:13
Author:admin\Microsoft\Application Data\Temp\MINSTA-A503.dgn

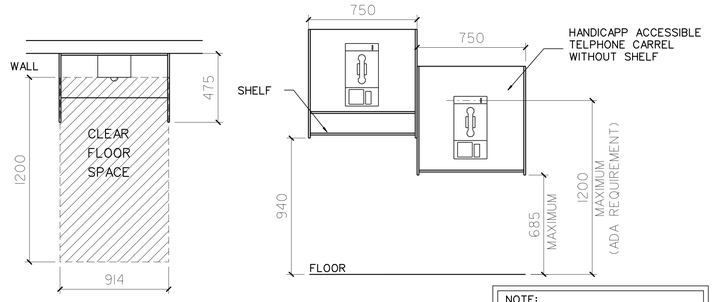

NOTE:

CONTRACTOR SHALL PROVIDE (1) STANDARD TELEPHONE CARREL AND (1) HANDICAPP ACCESSIBLE TELEPHONE CARREL @ LOBBY AREA. REFER TO FLOOR PLAN FOR LOCATION .(TYP.)

1 WALL MOUNTED TELEPHONE CARREL

SCALE: 1:20

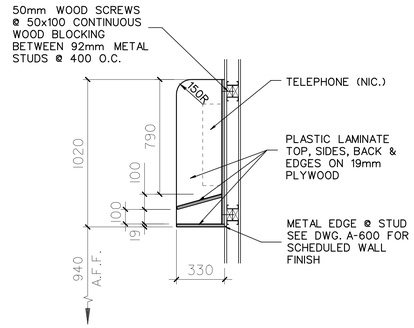

2 TELEPHONE CARREL DETAIL

SCALE: 1:20

ABBREVIATIONS FOR FIRE EXTINGUISHER

F.E.C.- SEMI-RECESSED FIRE EXTINGUISHER CABINET

S.F.E.C.- SURFACE MOUNTED FIRE EXTINGUISHER CABINET

F.E.- SURFACE MOUNTED FIRE EXTINGUISHER EQUIPT.

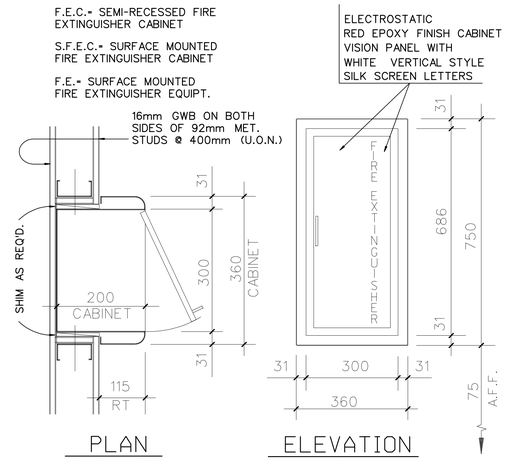

PLAN
SCALE: NTS

ELEVATION
SCALE: NTS

(SEMI-RECESSED FIRE EXTINGUISHER CABINET SHOWN)

NOTE: FIRE EXTING. CABINET TO ACCOMMODATE 2 - 10# ABC EXTINGUISHERS (TYP)

3 FIRE EXTINGUISHER CABINET

SCALE: NTS

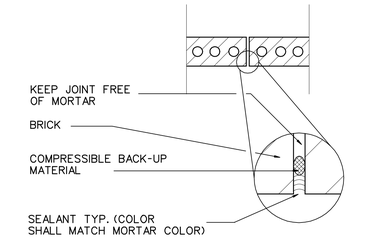

4 BRICK EXPANSION JOINT DETAIL (TYP.)

SCALE: 1:10

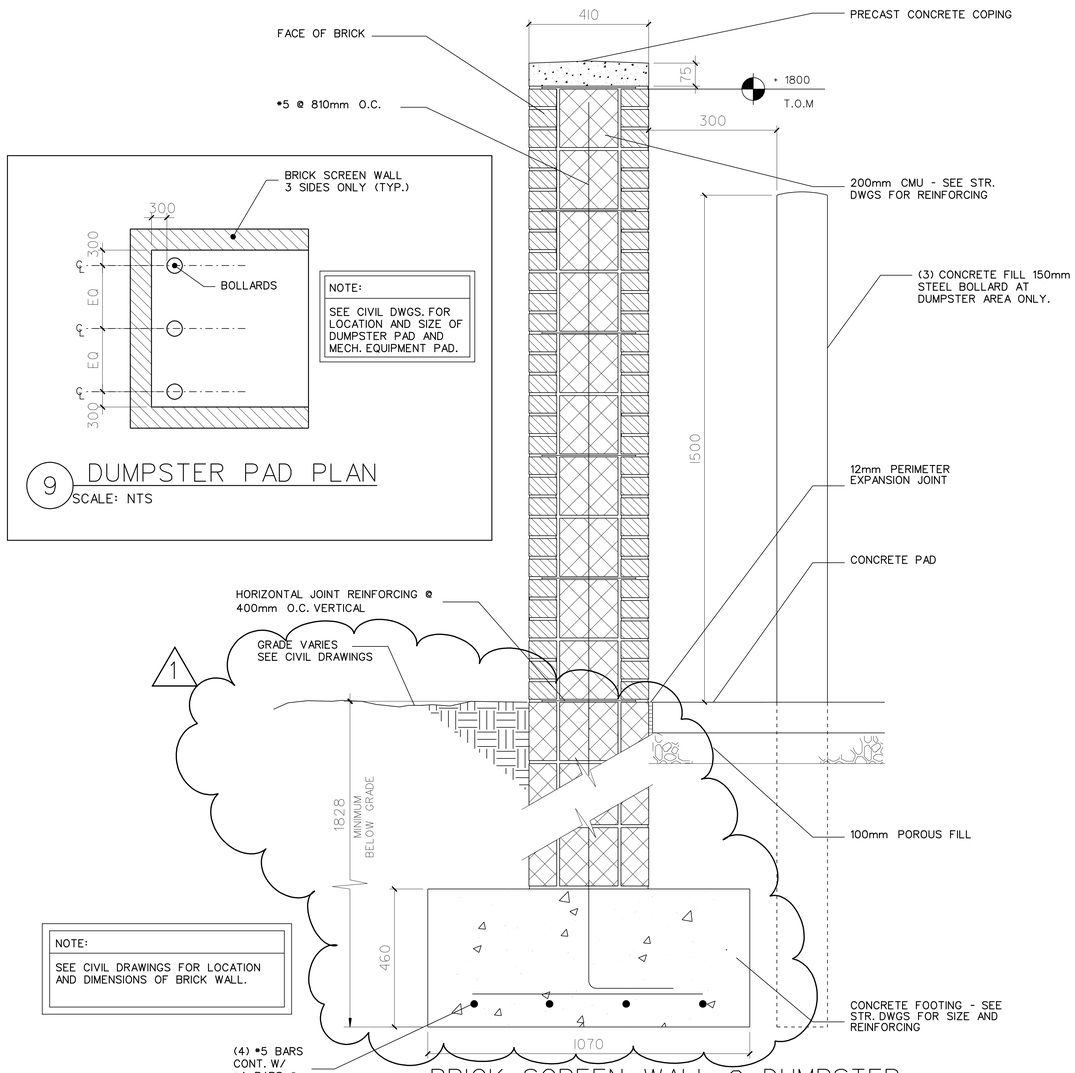

NOTE:

SEE CIVIL DWGS. FOR LOCATION AND SIZE OF DUMPSTER PAD AND MECH. EQUIPMENT PAD.

9 DUMPSTER PAD PLAN

SCALE: NTS

NOTE:

SEE CIVIL DRAWINGS FOR LOCATION AND DIMENSIONS OF BRICK WALL.

5 BRICK SCREEN WALL @ DUMPSTER & MECH. EQUIPMENT- SECTION

SCALE: NTS

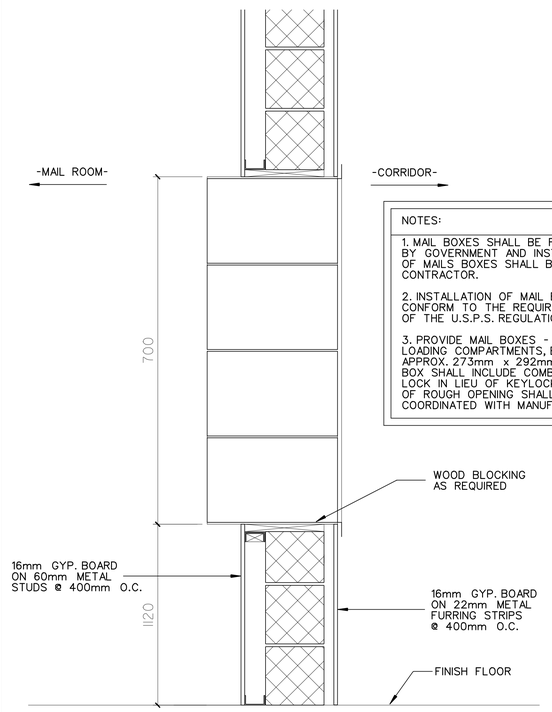

NOTES:

1. MAIL BOXES SHALL BE FURNISHED BY GOVERNMENT AND INSTALLATION OF MAILS BOXES SHALL BE DONE BY CONTRACTOR.

2. INSTALLATION OF MAIL BOXES SHALL CONFORM TO THE REQUIREMENTS OF THE U.S.P.S. REGULATIONS.

3. PROVIDE MAIL BOXES - 16 REAR LOADING COMPARTMENTS, EACH APPROX. 273mm x 292mm. EACH MAIL BOX SHALL INCLUDE COMBINATION LOCK IN LIEU OF KEYLOCKS. SIZE OF ROUGH OPENING SHALL BE COORDINATED WITH MANUFACTURER.

6 TYP. MAIL BOX SECTION

SCALE: NTS

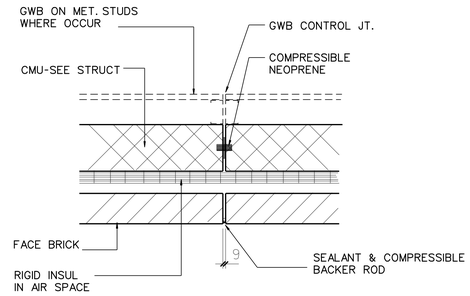

7 MASONRY CONTROL JOINT DETAIL (TYP.)

SCALE: 1:10

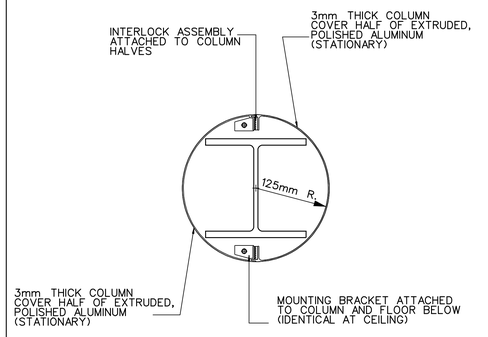

8 COLUMN DETAIL @ ROOMS 106 AND 112

SCALE: 1:10

US Army Corps of Engineers
New York District

Symbol	Description	Date	Appr.
1	MODIFIED FOOTING DEPTH	12/14/04	
	90% SUBMISSION	10/04	
	65% SUBMISSION	09/04	
	15% SUBMISSION	03/04	

Designed by: | Date: | Size: | Rev:
Dwn by: | Ckd by: | Drawing file no.:
Reviewed by: | Drawing code:
Submitted by: | Plot date: 14-DEC-2004 16:13 | Plot by: a3jimmee | File: 4000000000
File name: S:\Benson\military\Niagara Fall AFB\MEPS\Architectural\DWG Design\PRINTS\A-504.dgn

U.S. ARMY ENGINEER DISTRICT
CORPS OF ENGINEERS
NEW YORK, NEW YORK

PN 58973
MILITARY ENTRANCE PROCESSING STATION (MEPS)
NIAGARA FALLS, NY

MISCELLANEOUS DETAILS

Sheet reference number:
A–504

Submitted by: a3jimmee
Lastfiledsaved by: gwhitsgarra Full AFB\MEPS\Architectural\DWG Design\PRINTS\A-504.dgn
Plot Date: 14-DEC-2004 16:13

DOOR SCHEDULE

ROOM	DOOR								FRAME						HDW	REMARKS
	DOOR NO.	ELEV.	MAT'L.	SIZE W	SIZE H	SIZE T	GLASS TYPE	FIRE RATED	ELEV.	MAT'L.	HEAD	JAMB	SILL	FIRE RATED	SET NO.	
VESTIBULE	101	D	ALUM	2 @ 914	2133	45	G8		D	ALUM	H1	J1	S1		HW13 (1)	
MAIN LOBBY	102	D	ALUM	2 @ 914	2133	45	G7		D	ALUM	H5	J3	——		HW12	
BRIEFING ROOM	103	F	WD	914	2133	45	——		E	HM	H3	J3	S4		HW1	
CEREMONY ROOM	103A	F	WD	914	2133	45	——		C	HM	H3	J3	——		HW13	
CEREMONY ROOM	104	E	(1) WD	914	2133	45	G2		F	WD (1)	H3	J3	S4		HW13	SEE WINDOW SCHEDULE DWG. A-604
VISITORS WAITING ROOM	105	E	WD	914	2133	45	G2		F	WD	H3	J3	S4		HW13	SEE WINDOW SCHEDULE DWG. A-604
WAITING AREA	106	D	ALUM	2 @ 914	2133	45	G2		G	ALUM	H3	J3	S5		HW11	
CORRIDOR	106A	A	HM	914	2133	45	G6		A	HM	H1	J1	S3		HW3 (1)	
CORRIDOR	106B	A	WD	914	2133	45	G2		C	HM	H3	J3	——		HW7	
AIR FORCE	107	F	WD	914	2133	45	——		E	HM	H3	J3	S4		HW2	
ARMY	108	F	WD	914	2133	45	——		E	HM	H3	J3	S4		HW2	
SECURITY INTERVIEW	109	F	WD	914	2133	45	——		E	HM	H3	J3	——		HW2	
NAVY	110	F	WD	914	2133	45	——		E	HM	H3	J3	S4		HW2	
NAVY ADVANCE PLACEMENT TEST ROOM	111	F	WD	914	2133	45	——		E	HM	H3	J3	——		HW1	
COAST GUARD	112	F	WD	914	2133	45	——		E	HM	H3	J3	S4		HW2	
WOMENS TOILET	113	F	WD	914	2133	45	——		C	HM	H3	J3	S6		HW6	25mm UNDERCUT
MENS TOILET	114	F	WD	914	2133	45	——		C	HM	H3	J3	S6		HW6	25mm UNDERCUT
NATIONAL GUARD	115	F	WD	914	2133	45	——		E	HM	H3	J3	S4		HW2	
MARINE CORPS.	116	F	WD	914	2133	45	——		E	HM	H3	J3	S4		HW2	
ELECTRICAL CLOSET	117	F	WD	914	2133	45	——		C	HM	H3	J3	——		HW2	25mm UNDERCUT
GAME ROOM	118	E	ALUM	914	2133	45	G2		F	ALUM	H3	J3	S5		HW13	SEE WINDOW SCHEDULE DWG. A-604
FILES ROOM	119	F	WD	914	2133	45	——		E	HM	H3	J3	S4		HW2	
FILES ROOM	119A	F	WD	914	2133	45	——		E	HM	H3	J3	——		HW2	
COPY / PACKET BREAKDOWN ROOM	120	F	WD	914	2133	45	——		E	HM	H3	J3	S4		HW1	
COPY / PACKET BREAKDOWN ROOM	120A	F	WD	914	2133	45	——		E	HM	H3	J3	——		HW1	
CORRIDOR	121	F	WD	914	2133	45	——		E	HM	H3	J3	S5		HW7	
CORRIDOR	121A	F	WD	914	2133	45	——		E	HM	H3	J3	——		HW7	
CORRIDOR	121B	E	ALUM	914	2133	45	G8		A	ALUM	H1	J1	S3		HW3 (1)	
OPERATIONS ADMINISTRATION	122	F	WD	914	2133	45	——		E	HM	H3	J3	S4		HW2	
OPERATIONS ADMINISTRATION	122A	A	WD	914	2133	45	G2		E	HM	H3	J3	S4		HW1	
PROCESSING NCO	123	F	WD	914	2133	45	——		E	HM	H3	J3	——		HW2	
OPERATIONS OFFICER	124	F	WD	914	2133	45	——		E	HM	H3	J3	——		HW2	
TRAVEL AGENCY	125	A	WD	914	2133	45	G2		C	HM	H3	J3	——		HW2	
SYSTEMS ADMINISTRATOR	126	F	WD	914	2133	45	——		E	HM	H3	J3	——		HW2	
MIRS/ COMMUNICATION	127	A	WD	914	2133	45	——		C	HM	H3	J3	S4		HW2	
CONFERENCE ROOM	128	F	WD	914	2133	45	——		E	HM	H3	J3	S4		HW2	
CONFERENCE ROOM	128A	F	WD	914	2133	45	——		E	HM	H3	J3	——		HW1	
HEADQUARTERS ADMINISTRATION	129	F	WD	914	2133	45	——		E	HM	H3	J3	S4		HW2	
BUDGET TECHNICIAN	130	F	WD	914	2133	45	——		E	HM	H3	J3	——		HW2	
COMMANDER	131	F	WD	914	2133	45	——		E	HM	H3	J3	——		HW2	
STATION NCO	132	F	WD	914	2133	45	——		E	HM	H3	J3	——		HW2	
MENS TOILET	133	F	WD	914	2133	45	——		C	HM	H3	J3	S6		HW9	25mm UNDERCUT
WOMENS TOILET	134	F	WD	914	2133	45	——		C	HM	H3	J3	S6		HW9	25mm UNDERCUT
MAIL ROOM	135	F	HM	914	2133	45	——		C	HM	H4	J2	——		HW9	
STAFF LOUNGE	136	F	WD	914	2133	45	——		E	HM	H3	J3	——		HW1	
SUPPLY STORAGE ROOM	137	C	WD	914	2133	45	——		C	HM	H3	J3	——		HW9	
SUPPLY STORAGE ROOM	137A	B	HM	2 @ 914	2133	45	——		B	HM	H1	J1	S3		HW5	
ELECTRICAL ROOM	138	B	HM	2 @ 914	2133	45	——		H	HM	H1	J1	S2		HW14	
MECHANICAL ROOM	139	B	HM	2 @ 914	2133	45	——		H	HM	H1	J1	S2		HW14	
SECURE TEST STORAGE & SCORING	140	A	WD	914	2133	45	G2		C	HM	H3	J3	——		HW2	
ASVAB STORAGE ROOM	141	F	WD	914	2133	45	——		C	HM	H3	J3	S4		HW2	25mm UNDERCUT
ASVAB STORAGE ROOM	141A	F	WD	914	2133	45	——		C	HM	H3	J3	S4		HW2	25mm UNDERCUT
TEST COORDINATOR & EDUCATION SERVICES SPECIALIST	142	F	WD	914	2133	45	——		E	HM	H3	J3	S4		HW2	
TESTING ADMINISTRATION	143	C	WD	914	2133	45	——		E	HM	H3	J3	——		HW2	
TEST CONTROL OFFICER	144	F	WD	914	2133	45	——		E	HM	H3	J3	——		HW2	
CAT-ASVAB TEST ROOM	145	A	WD	914	2133	45	G2		C	HM	H3	J3	S4		HW2	
TEST ROOM	146	A	WD	914	2133	45	G2		C	HM	H3	J3	S4		HW2	
TEST ROOM	147	A	WD	914	2133	45	G2		C	HM	H3	J3	——		HW2	
TEST ROOM	147A	A	WD	914	2133	45	G2		C	HM	H3	J3	——		HW2	
FOOD STORAGE	148	F	WD	914	2133	45	——		C	HM	H3	J3	——		HW2	25mm UNDERCUT
FOOD STORAGE	148A	F	WD	914	2133	45	——		C	HM	H3	J3	——		HW2	25mm UNDERCUT
APPLICANT DINING	149	E	ALUM	914	2133	45	G8		F	ALUM	H1	J1	S3		HW10	
APPLICANT DINING	150	D	ALUM	2 @ 914	2133	45	G2		G	ALUM	H3	J3	S5		HW11	
MEDICAL BRIEFING	151	F	WD	914	2133	45	——		E	HM	H3	J3	S4		HW1	
MEDICAL BRIEFING	151A	F	WD	914	2133	45	——		E	HM	H3	J3	S4		HW1	
WAITING AREA	152	D	ALUM	2 @ 914	2133	45	G2		G	ALUM	H3	J3	S5		HW11	
CORRIDOR	152A	A	HM	914	2133	45	G6		A	HM	H1	J1	S3		HW3 (1)	
MALE ORTHO	153	F	WD	914	2133	45	——		C	HM	H3	J3	——		HW6	
CHIEF MEDICAL OFFICER	154	F	WD	914	2133	45	——		C	HM	H3	J3	——		HW2	
CHIEF MEDICAL OFFICER	154A	F	WD	914	2133	45	——		C	HM	H3	J3	——		HW6	
EXAM ROOM	155	F	WD	914	2133	45	——		C	HM	H3	J3	——		HW6	
MALE URINALYSIS	156	F	WD	914	2133	45	——		C	HM	H3	J3	S6		HW7	25mm UNDERCUT
EXAM ROOM	157	F	WD	914	2133	45	——		C	HM	H3	J3	——		HW6	
EXAM ROOM	158	F	WD	914	2133	45	——		C	HM	H3	J3	——		HW6	
LABORATORY	159	A	WD	914	2133	45	G2		C	HM	H3	J3	——		HW1	
SEROLOGY	159A	F	WD	914	2133	45	——		C	HM	H3	J3	——		HW1	
SEROLOGY	159B	F	WD	914	2133	45	——		C	HM	H3	J3	——		HW1	
EKG / COT ROOM	160	F	WD	914	2133	45	——		C	HM	H3	J3	——		HW6	
MEDICAL STORAGE ROOM	161	F	WD	914	2133	45	——		C	HM	H3	J3	——		HW2	25mm UNDERCUT
FEMALE UNRINALYSIS	162	F	WD	914	2133	45	——		C	HM	H3	J3	S6		HW7	25mm UNDERCUT
FEMALE WAITING AREA	163	A	WD	914	2133	45	G2		C	HM	H3	J3	——		HW1	
FEMALE WAITING AREA	163A	A	HM	914	2133	45	G6		A	HM	H1	J1	S3		HW9	
EXAM ROOM	164	F	WD	914	2133	45	——		C	HM	H3	J3	——		HW6	
FEMALE ORTHO	165	F	WD	914	2133	45	——		C	HM	H3	J3	——		HW6	
FEMALE ORTHO	165A	F	WD	914	2133	45	——		C	HM	H3	J3	——		HW6	
AUDIO ROOM	166	A	WD	914	2133	45	G2		C	HM	H3	J3	——		HW1	
VISION TEST ROOM	167	A	WD	914	2133	45	G2		C	HM	H3	J3	——		HW1	
MEDICAL ADMINISTRATION	168	F	WD	914	2133	45	——		C	HM	H3	J3	——		HW2	
MEDICAL NCO	169	F	WD	914	2133	45	——		E	HM	H3	J3	S4		HW2	
ELECTRICAL CLOSET	170	F	WD	914	2133	45	——		C	HM	H3	J3	S5		HW2	25mm UNDERCUT
JANITORS CLOSET	171	F	WD	914	2133	45	——		C	HM	H3	J3	S5		HW2	25mm UNDERCUT
FEMALE RESTROOM	172	F	WD	914	2133	45	——		C	HM	H3	J3	S6		HW7	25mm UNDERCUT
MALE RESTROOM	173	F	WD	914	2133	45	——		C	HM	H3	J3	S6		HW7	25mm UNDERCUT
BAGGAGE ROOM	174	F	WD	914	2133	45	——		E	HM	H3	J3	S5		HW2	

DOOR ELEVATIONS

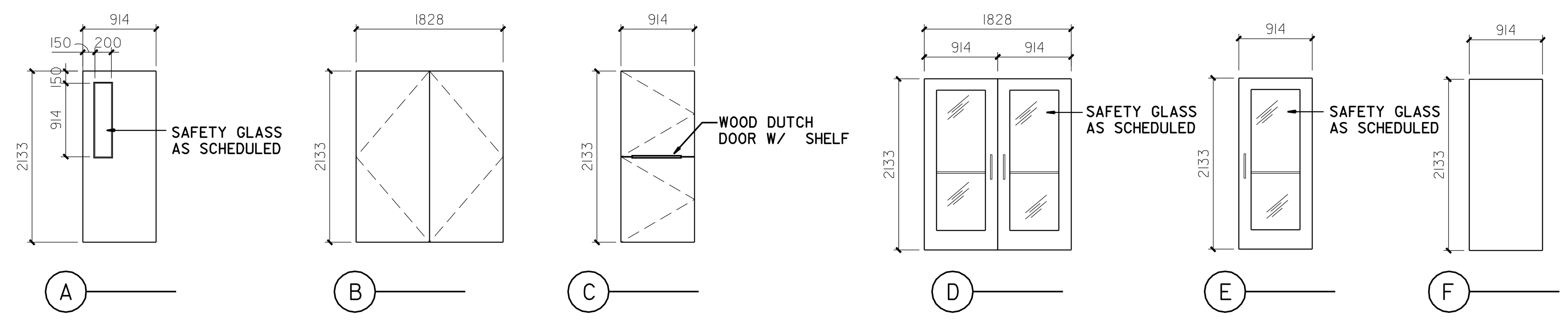

DOOR FRAMES

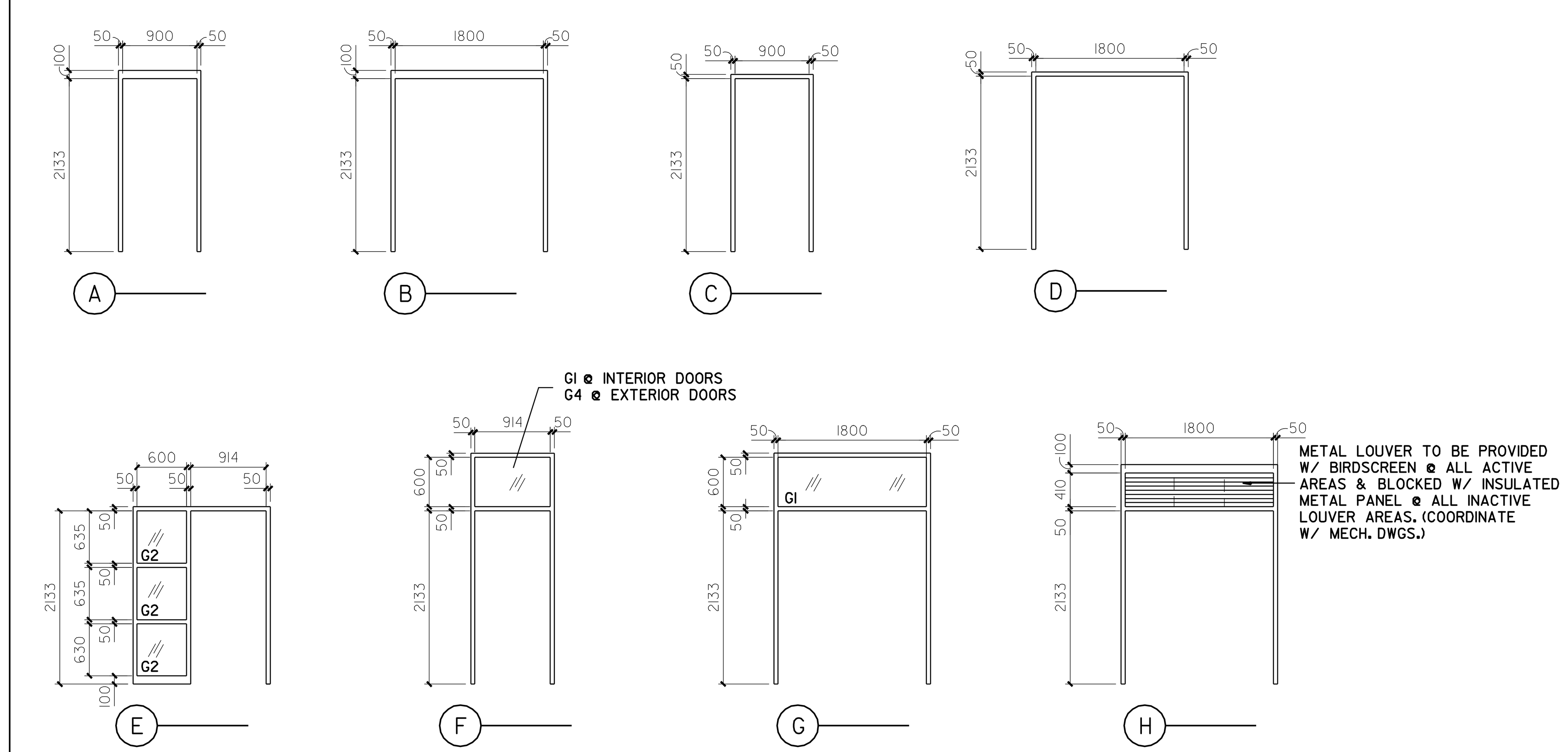

GLASS TYPES

G1 - 6mm PLATE GLASS, CLEAR

G2 - 6mm PLATE GLASS, CLEAR TEMPERED

G3 - 25mm INSULATED, TINTED-TEMPERED, LAMINATED

G4 - 25mm INSULATED TINTED- LAMINATED

G5 - 25mm INSULATED, CLEAR- LAMINATED

G6 - 6mm WIRE GLASS

G7 - 6mm CLEAR LAMINATED

G8 - 6mm TINTED LAMINATED

ABBREVIATIONS

HM	HOLLOW METAL
ALUM	ALUMINUM
MT	METAL
HR	HOUR
WD	SOLID CORE WOOD

NOTES

1. HEAD, JAMB AND SILL DETAILS ARE LOCATED ON DRAWING A-602 AND A-603.

US Army Corps of Engineers
New York District

Symbol	Description	Date	Appr.
1	AS NOTED	12/14/04	
	90% SUBMISSION	10/04/04	
	30% SUBMISSION	06/01/04	
	15% SUBMISSION	03/05/04	

U.S. ARMY ENGINEER DISTRICT
CORPS OF ENGINEERS
NEW YORK, NEW YORK

Designed by: | Date: | Size: | Rev.:
Dwn by: | Ckd by: | Drawing file no.:
Reviewed by: | Drawing code:
Submitted by: | Plot date: 14-DEC-2004 16:13 | Plot by: e3jehmwe | Scale: 50.000000:1.000000
File name: S:\Vericom\military\Niagara Fall\AFB\MEPS\Architectural\30% Design\PRINTS\A-601.dgn

PN 59873
MILITARY ENTRANCE PROCESSING STATION (MEPS)
NIAGARA FALLS, NY

DOOR SCHEDULE

Sheet reference number:
A–601