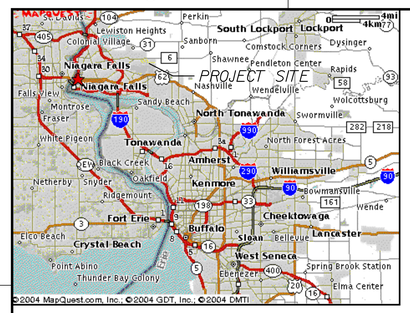

General Map

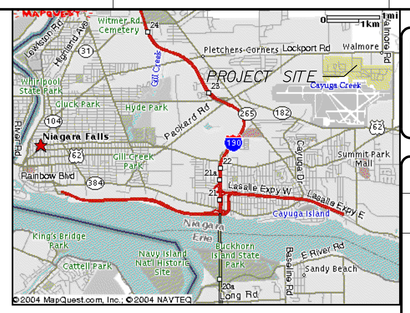

Area Map

US Army Corps of Engineers
New York District

US ARMY CORPS OF ENGINEERS NEW YORK DISTRICT

NIAGARA FALLS AIR RESERVE STATION

MILITARY ENTRANCE PROCESSING STATION

M E P S

PN 59873

90 / 100% DESIGN SUBMISSION SEPTEMBER 2004

DESIGNED BY:

US Army Engineer District, New York
Engineering Division Design Branch
Jacob K Javits Federal Building
26 Federal Plaza
New York, N.Y. 10278–0900

Symbol	Description	Date	Appr.
	90% SUBMISSION	10/04/04	
	30% SUBMISSION	06/01/04	
	15% SUBMISSION	03/05/04	

Designed by: Date: Size: A1 Rev.:
Dwn by: Ckd by: Drawing file no.:
Reviewed by: Drawing code:
Submitted by: Plot date: 19-NOV-2004 15:57
Chief: Plot by: e3jerrwe
Scale: 0.078725:1.000000
File name: S:\fileroom\military\Niagara Fall AFB\MEPS\General\G-001.dgn

U.S. ARMY ENGINEER DISTRICT
CORPS OF ENGINEERS
NEW YORK, NEW YORK

PN 59873
NIAGARA FALLS AIR RESERVE STATION STATION
MILITARY ENTRANCE PROCESSING STATION

COVER SHEET

Sheet reference number:
G–001

INDEX OF DRAWINGS

SHEET REFERENCE NO.	FILE NO.	TITLE.
G–001		COVER SHEET
G–002		INDEX OF DRAWINGS
G–003		ABBREVIATIONS & SYMBOLOGY
		CIVIL
C–1		DEMOLITION PLAN
C–2		SITE PLAN
C–3		GRADING PLAN
C–4		UTILITY PLAN
C–5		EROSION AND SEDIMENT CONTROL PLAN
C–6		LANDSCAPE PLAN
C–7		ROAD LAYOUT AND PROFILE
C–8		SITE DETAILS
C–9		SITE DETAILS
C–10		SITE DETAILS
C–11		SOIL EROSION AND SEDIMENTATION CONTROL DETAILS
		ARCHITECTURAL
A–101		FLOOR PLAN
A–101A		ENLARGED FLOOR PLAN PART 'A'
A–101B		ENLARGED FLOOR PLAN PART 'B'
A–101C		ENLARGED FLOOR PLAN PART 'C'
A–101D		ATTIC PLAN
A–102		REFLECTED CEILING PLAN
A–103		ROOF PLAN
A–104		FLOOR TILE PATTERN
A–105		ENLARGED TILE PATTERN
A–106		FLOOR TILE RADIUS DIMENSION PLAN
A–107		FURNITURE PLAN
A–200		BUILDING ELEVATIONS
A–201		BUILDING ELEVATIONS
A–300		BUILDING SECTIONS
A–301		BUILDING SECTIONS
A–400		TOILET ROOM ACCESSORIES DETAILS
A–401		ENLARGED BATHROOM PLANS & ELEVATIONS
A–402		ENLARGED BATHROOM PLANS & ELEVATIONS
A–500		WALL SECTIONS
A–501		WALL SECTIONS
A–502		WALL SECTIONS
A–502A		WALL SECTIONS
A–503		CURVE WALL DETAILS
A–504		MISCELLANEOUS DETAILS
A–505		MISCELLANEOUS DETAILS
A–600		FINISH SCHEDULE
A–601		DOOR SCHEDULE

SHEET REFERENCE NO.	FILE NO.	TITLE.
A–602		DOOR DETAILS
A–603		DOOR DETAILS
A–604		WINDOW & LOUVER DETAILS
A–605		WALL TYPES & MISCELLANEOUS DETAILS
A–606		SUSPENDED CEILING DETAILS
A–700		ENLARGED CASEWORK PLANS & DETAILS
A–701		ENLARGED CASEWORK PLANS & DETAILS
A–702		ENLARGED CASEWORK PLANS & DETAILS
A–703		SIGNAGE
A–704		SIGNAGE SCHEDULE & DETAILS
LS–101		LIFE SAFETY PLAN
		STRUCTURAL
S–001		GENERAL NOTES
S–101		SLAB PLAN
S–102		STEEL FRAMING PLAN
S–103		ROOF SUPPORT PLAN
S–104		COLUMN SCHEDULE
S–105		MISC. STEEL SECTIONS
S–106		CANOPY DETAILS
S–107		ROOF FRAMING PLAN
S–108		MASONRY DETAILS
S–701		FOUNDATION PLAN
S–702		FOUNDATION SECTIONS
S–703		PIER WITH PILASTER PLANS
		MECHANICAL
M–001		SYMBOLS & ABBREVIATIONS – HVAC
M–100		FLOOR PLAN – DUCTWORK
M–101		FLOOR PLAN – PIPING
M–102		ATTIC DUCTWORK & PIPING
M–500		SEISMIC BRACING AND SUPPORT DETAILS – 1
M–501		SEISMIC BRACING AND SUPPORT DETAILS – 2
M–502		PIPING SUPPROT DETAILS
M–503		MECHANICAL DETAILS – 1
M–504		MECHANICAL DETAILS – 2
M–505		MECHANICAL DETAILS – 3
M–506		MECHANICAL DETAILS – 4
M–507		MECHANICAL DETAILS – 5
M–508		MECHANICAL DETAILS – 6
M–509		MECHANICAL DETAILS – 7
M–510		MECHANICAL PART PLANS
M–600		MECHANICAL SCHEDULES – 1
M–601		MECHANICAL SCHEDULES – 2
M–602		MECHANICAL SCHEDULES – 3

SHEET REFERENCE NO.	FILE NO.	TITLE.
M–700		CONTROLS
M–701		AHU–1,2,3 CONTROL SCHEMATIC
M–702		AHU–1,2,3 CONTROL LOGIC DIAGRAMS
M–703		BOILER CONTROL SCHEMATIC
M–704		MISCELLANEOUS CONTROLS DETAILS
M–705		SEQUENCE OF OPERATIONS AND NOTES
		PLUMBING
P–001		LEGEND, NOTES & DETAILS PLUMBING
P–100		FLOOR PLAN PLUMBING
P–400		PART PLAN
P–600		WATER PIPING RISER DIAGRAMS
P–601		WASTE PIPING RISER DIAGRAMS
		FIRE PROTECTION
FA–01		FIRE ALARM FLOOR PLAN
FP–001		FIRE PROTECTION FLOOR PLAN
		ELECTRICAL
E–01		SITE PLAN, SYMBOLS AND ABBREVIATIONS
E–02		POWER PLAN
E–03		LIGHTING PLAN
E–04		SYSTEMS PLAN
E–05		SINGLE LINE DIAGRAM & ELECTRICAL DETAILS
E–06		ELECTRICAL DETAILS
E–07		LIGHTING DETAILS
E–08		LIGHTING DETAILS
E–09		SYSTEMS DETAILS
E–10		SYSTEMS DETAILS & SCHEDULES
E–11		SCHEDULES
E–12		SCHEDULES
E–13		SYSTEMS DETAILS
		TOPOGRAPHIC
R–1		SITE SURVEY
R–2		SITE SURVEY
R–3		SITE SURVEY
R–4		SITE SURVEY
R–5		SUBSURFACE EXPLORATION

US Army Corps of Engineers
New York District

Symbol	Description	Date	Appr.
90%	SUBMISSION	10/04/04	
75%	SUBMISSION	07/02/04	
35%	SUBMISSION	03/02/04	

U.S. ARMY ENGINEER DISTRICT
CORPS OF ENGINEERS
NEW YORK, NEW YORK

Designed by: | Date: | Size: | Rev.:
Dwn by: | Ckd by: | Drawing file no.:
Reviewed by: | Drawing code:
Submitted by: | Plot date: 19-NOV-2004 15:57 | Plot by: s-kbarnwell | Scale: 0.000000000000

File name: S:\Simon\military\Niagara Falls AFB\MERS\General\G-002.dgn

PN 59873
NIAGARA FALLS AIR RESERVE STATION STATION
MILITARY ENTRANCE PROCESSING STATION

INDEX OF DRAWINGS

Sheet reference number:
G-002

Submitted by: a3jenkmee
Plot Date: 19-NOV-2004 15:57
pw:\\crd-cadwin1\ldp\PW\Share & Fail AFB\MER\General\G-002.dgn

ABBREVIATIONS

@	AT
&	AND
A.B.	ANCHOR BOLT
ABV	ABOVE
ACST	ACOUSTIC - ACOUSTICAL
ACT	ACOUSTICAL CEILING TILE
AFF	ABOVE FINISHED FLOOR
AGG	AGGREGATE
ALUM./AL.	ALUMINUM
AMCA	AIR MOVING & AIR CONDITIONING INC.
ARCH.	ARCHITECTURAL
ASTM	AMERICAN SOCIETY FOR TESTING & MATERIALS
AWG	AMERICAN WIRE GAUGE
BBH	BASE BOARD HEATER
BH	BUMPER HOOK
BLDG	BUILDING
BLK/BLKG.	BLOCK/BLOCKING
BM	BEAM OR BENCH MARK
B.O.	BOTTOM OF
BOT	BOTTOM
℄/CL	CENTER LINE
CAB	CABINET
CAP	CAPACITY
CEM	CEMENT
CER	CERAMIC
CH	COAT HOOK
CHAN/ ⊏	CHANNEL
CI	CAST IRON
CJ	CONTRACTION JOINT
CLG	CEILING
CLO	CLOSET
CMP	CORRUGATED METAL PIPE
CMU	CONCRETE MASONRY UNIT
COL	COLUMN
CONC	CONCRETE
CONN.	CONNECTION
CONT	CONTINUOUS
CT	CERAMIC TILE
CTRS	CENTERS/COOLING TOWER
CL	CLEAR
CU	COPPER
DET	DETAIL
DIA. / ϕ/	DIAMETER
DIM	DIMENSION
DN	DOWN
DR	DOOR
DEG.	DEGREE
D.S.	DOWNSPOUT
DWG	DRAWING
EA	EACH
EIFS	EXTERIOR INSULATION FINISH SYSTEM
EL/ELEV	ELEVATION
ELEC	ELECTRICAL
EMG	EMERGENCY
EQ	EQUAL
EQUIP/EQPT	EQUIPMENT
EWC	ELECTRIC WATER COOLER
EXIST	EXISTING
EXP	EXPANSION
EJ	EXPANSION JOINT
EXT/EX	EXTERIOR
E.W.	EMERGENCY EYE WASH AND DELUGE SHOWER
E.W.E.F.	EACH WAY EACH FACE
ETC	ETCETERA/AND SO FORTH
FED SPEC	FEDERAL SPECIFICATION
FD	FLOOR DRAIN
FEC	FIRE EXTINGUISHER CABINETS
FF	FINISHED FLOOR
FIN	FINISHED, FINISH
FIXT	FIXTURE
FLR/FL	FLOOR
FLSG	FLASHING
FOUND/FDN	FOUNDATION
FR	FIRE RATED
FT	FOOT
GA	GAUGE
GALV	GALVANIZED
GEN	GENERATOR
GB	GRAB BAR
GND	GROUND
GL	GLASS
GWB	GYPSUM WALL BOARD
H.C.	HANDICAPPED
HCL	HANDICAPPED LAVATORY
HM	HOLLOW METAL
HOR	HORIZONTAL
HP	HIGH POINT
HR	HANDRAIL
HR	HOUR
HT/HGT	HEIGHT
HW	HARDWARE
ID	IDENTIFICATION/INSIDE DIAMETER
I.J.	ISOLATION JOINT
INSUL/ INSUL'G	INSULATION /INSULATING
INV	INVERT
J.C.	JANITOR'S CLOSET
JT	JOINT
L	LAVATORY
LB	POUND
LH	LAVATORY HANDICAPPED
LLV	LOG VERTICAL
LOUV-LVR	LOUVER
L.F.	LINEAR FOOT
LP	LOW POINT
LT WT	LIGHTWEIGHT
MAT'L	MATERIAL
MAX	MAXIMUM
MECH.	MECHANICAL
MET	METAL
MG	MIRROR GLASS
MIL	MILITARY
MIN	MINIMUM
MISC	MISCELLANEOUS
MO	MASONRY OPENING
MSRY	MASONRY
MPH	MILES PER HOUR
NEMA	NATIONAL ELECTRICAL MANUFACTURES ASSOCIATION
NIC	NOT IN CONTRACT
NFS	NON-FROST SUSCEPTIBLE
NTS	NOT TO SCALE
NO/#	NUMBER
NOM	NOMINAL
OC	ON CENTER
OD	OUTSIDE DIAMETER
P	PAINTED
PART	PARTITION
PERIPH	PERIPHERY
PERIM	PERIMETER
PL	PLATE
PL GL	PLATE GLASS
PLYWD	PLYWOOD
PN	PANEL
PREFIN	PREFINISHED
PT	POINT
PTD	PAPER TOWEL DISPENSER
POSN.	POSITION
PVC	POLY-VINYL CHLORIDE/ POINT OF VERTICAL CURVATURE
PVI	POINT OF VERTICAL INTERSECTION
PVT	POINT OF VERTICAL TANGENCY
PT	PORCELAIN TILE
PTDHC	PAPER TOWEL DISP/RECEPTOR HANDICAPPED
RAD	RADIUS
REF	REFERENCE
REINF	REINFORCED
REQ'D	REQUIRED
RM	ROOM
R.O.	ROUGH OPENING
SCHED	SCHEDULE
SD	STACKED DRYER
SDH	SOAP DISPENSER HANDICAPPED
SEC'Y	SECURITY
SECT	SECTION
SGR	STATIC GROUND RECEPTICAL
SH	SHOWER
SIM	SIMILAR
SND	SANITARY NAPKIN DISPOSAL
SNTD	SANITARY NAPKIN & TAMPON DISPENSER
SP.	SPACE
SPCG	SPACING
SPEC	SPECIFICATION
SS	SERVICE SINK
SSCG	STAINLESS STEEL CORNER GUARD
STA	STATION
STAGG	STAGGERED
STD	STANDARD
ST. STL.	STAINLESS STEEL
STL	STEEL
STRUCT/ STRUCT'L	STRUCTURAL
SUSP	SUSPENDED
SYM	SYMMETRICAL
T&B	TOP & BOTTOM
TBD	TO BE DETERMINED
TEL	TELEPHONE
T/G	TOP OF GRADE
TGL	TEMPERED GLASS
THK./ t	THICKNESS
T.O.M.	TOP OF MASONRY
T.O.S.	TOP OF STEEL
TOW	TOP OF WALL
TP	TOWEL PIN
TPH	TOILET PAPER HOLDER
TYP	TYPICAL
U	URINAL
UC	UNDERCUT
UG	UNDERGROUND
UH	URINAL HANDICAPPED
U.O.N.	UNLESS OTHERWISE NOTED
VBB	VINYL BASE BOARD
VCT	VINYL COMPOSITION TILE
VERT	VERTICAL
VEST	VESTIBULE
W/	WITH
WC	WATER CLOSET
WCH	WATER CLOSET HANDICAPPED
WD	WOOD
WDO.	WINDOW
WGL	WIRE GLASS
W.R.	WATER RESISTANT
WRGWB	WATER RESISTANT GYPSUM WALL BOARD
WWF	WELDED WIRE FABRIC
WWM	WELDED WIRE MESH
Y.P.	YIELD POINT

MATERIAL LEGEND

- EARTH
- CONCRETE
- BRICK
- ROUGH LUMBER
- FINISHED LUMBER
- INSULATION (RIGID)
- INSULATION (BATT)
- CRUSHED STONE
- CONCRETE MASONRY UNIT
- CERAMIC TILE PORCELAIN TILE
- METAL (LARGE SCALE)
- METAL (SMALL SCALE)
- WIRE MESH PARTITION
- SECURITY FENCE
- GWB PARTITION
- NEW GWB PARTITIONS ON MET. STUDS
- WALLS & PARTITIONS TO BE REMOVED (SEE DEMOLITION DWG'S.)

GRAPHIC SYMBOLS

- 5 / 3 3 / A — SECTION, ELEVATION OR DETAIL NUMBER; SHEET ON WHICH DETAIL IS DRAWN; SHEET ON WHICH CONDITION IS LOCATED
- A — COLUMN NUMBER
- 101 — ROOM NUMBER
- 2 — OCCUPANCY LOAD, NUMBER OF PERSONS
- 200 — DOOR NUMBER
- W-1 — WINDOW TYPE

NOTE: SEE ADDITIONAL ABBREVIATION AND LEGENDS PROVIDED IN EACH DISCIPLINE.

US Army Corps of Engineers
New York District

Symbol	Description	Date	Appr.
	90% SUBMISSION	10/04/04	
	95% SUBMISSION	09/09/04	
	35% SUBMISSION	05/30/04	

U.S. ARMY ENGINEER DISTRICT
CORPS OF ENGINEERS
NEW YORK, NEW YORK

Designed by: | Date: | Size: | Rev.
Dwn by: | Ckd by: | Drawing file no.:
Reviewed by: | Drawing code:
Submitted by: | Plot date: 19-NOV-2004 15:58 | Plot by: eqbertrow | Style: G.000STD0000
File name: S:\Navcon\military\Niagara Fall AFB\MEPS\General\G-003.dgn

MILITARY ENTRANCE PROCESSING STATION (MEPS)
NIAGARA FALLS AIR RESERVE BASE, NEW YORK

PN 58973

ABBREVIATIONS & SYMBOLOGY

Sheet reference number:
G–003

Submitted by: eqbertrowe
Setter: eqbertrow/military/Niagara Fall AFB\MEPS\General\G-003.dgn
Plot Date: 19-NOV-2004 15:58

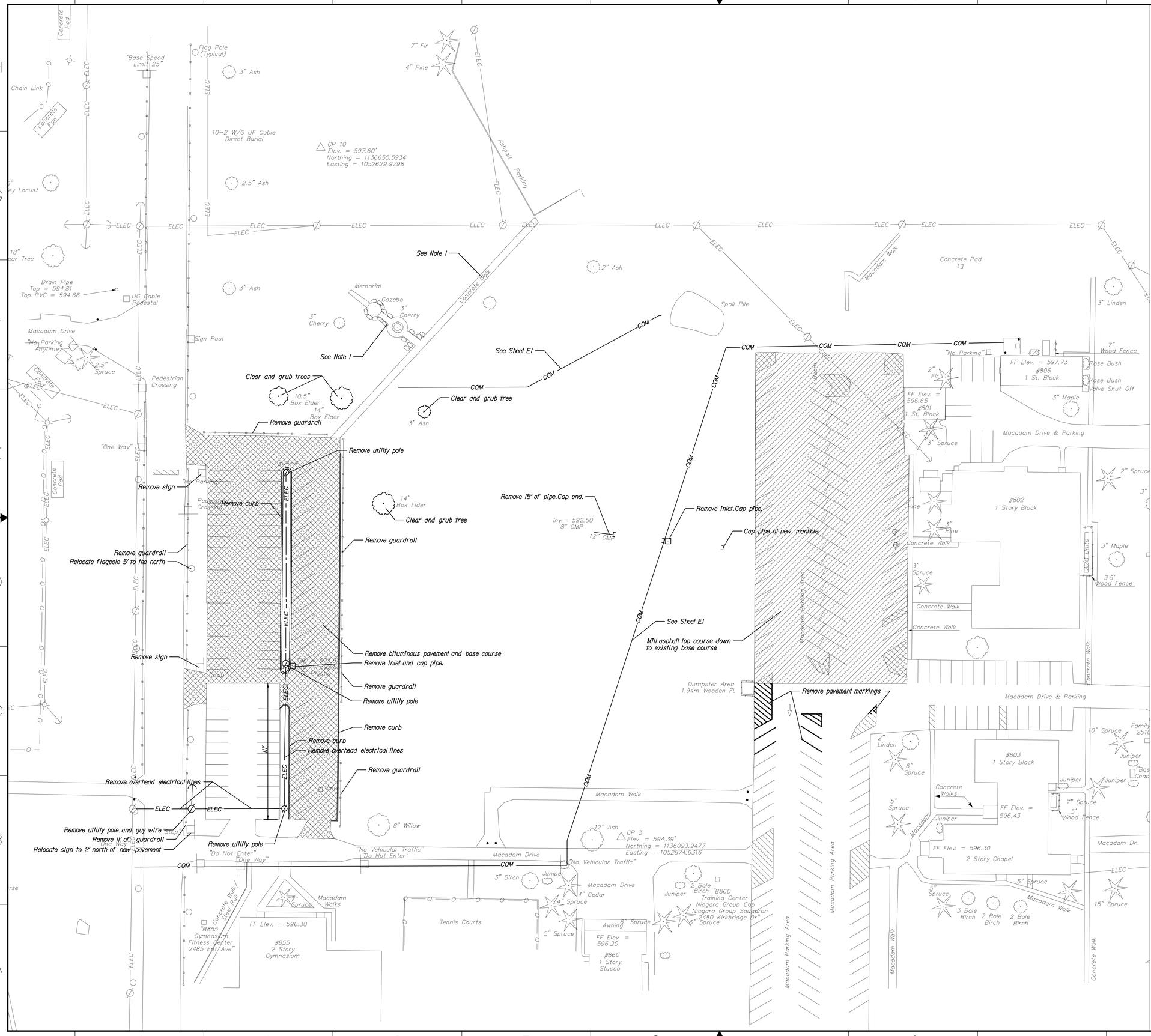

Note:
1. The gazebo, the memorial, the walks to the gazebo and the memorial, the vegetation around the gazebo and the memorial, and the concrete walk between the headquaters parking and gym parking are to be removed by others prior to the start of construction.

US Army Corps of Engineers
New York District

U.S. ARMY ENGINEER DISTRICT
CORPS OF ENGINEERS
NEW YORK, NEW YORK

PN 59673
MILITARY ENTRANCE PROCESSING STATION (MEPS)
NIAGARA FALLS, NY

DEMOLITION PLAN

SCALE: 1" = 30'

Sheet reference number:
C-1

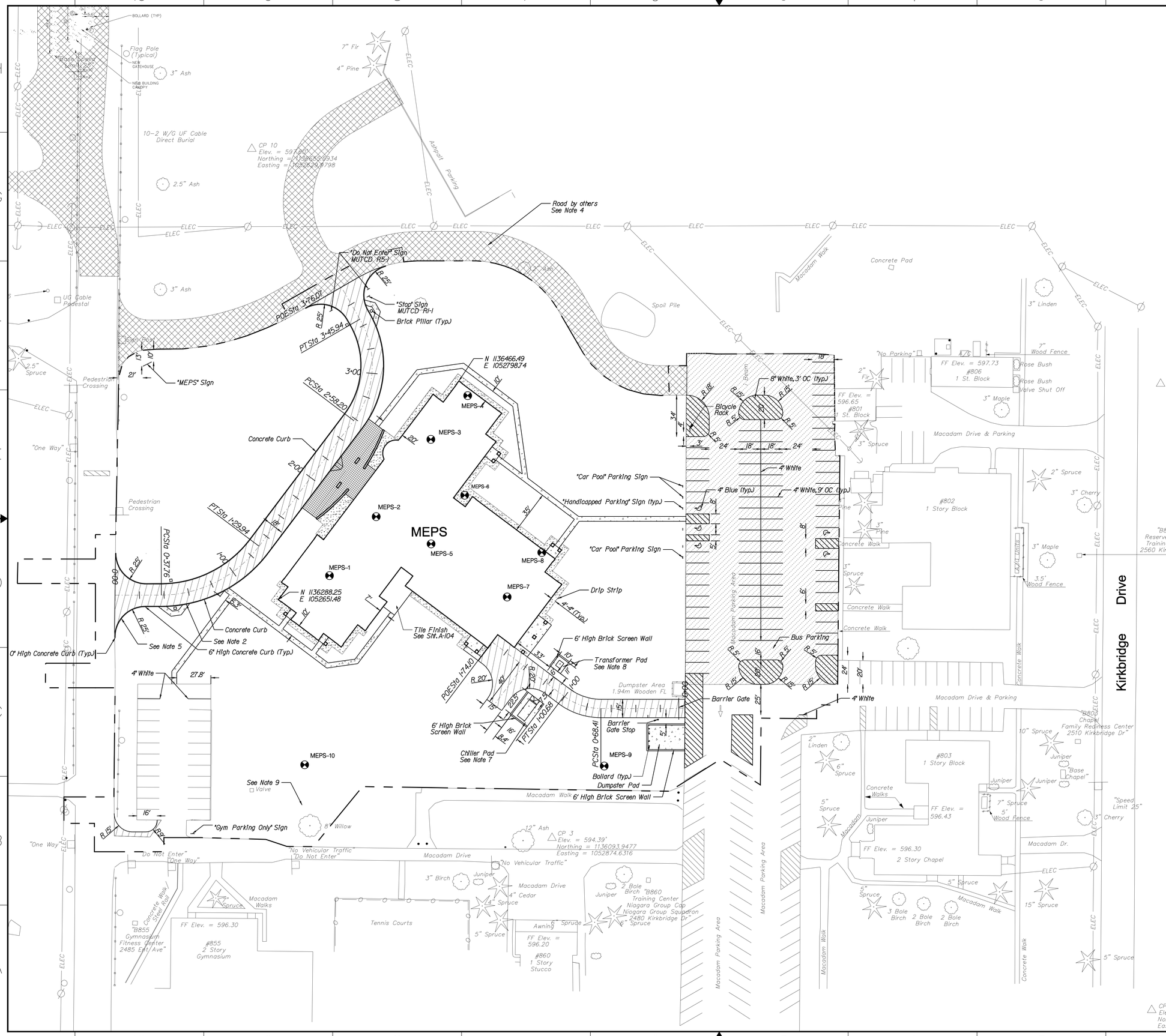

US Army Corps of Engineers
New York District

LEGEND

- Bituminous Pavement
- Concrete Pavement
- Resurface Existing Bituminous Pavement
- Colored Stamped Concrete
- MEPS-1 Boring
- Limit of Contractor's Working Area
- LIFU Jet Fuel Line

Notes:
1. Sidewalks shall be 4' wide.
2. Depress concrete curb to 0" high at sidewalks around brick pillars. Transition curb from 6" high to 0" high over 1'.
3. One lane of Ent Avenue shall be kept open at all times.
4. The Contractor shall coordinate his work with the road contractor.
5. At Ent Avenue and at the road by others, linearly transition curb of each fillet from 6" at the start of fillet to 0" at the end of fillet.
6. The project shall conform with criteria found in UFC 4-010-01 dated 8 October 2003 for a primary gathering facility.
7. Provide 2' clearance at the back of chiller and 4' clearance at the sides of chiller.
8. Provide 2.5' clearance at the sides and back of the transformer and 3' clearance at the front of transformer. The front of the transformer shall face the road.
9. The contractor shall exercise extreme caution while working around the active jet fuel line.

Symbol	Description	Date	Appr.

Rev.	Size	Date:	Designed by:	Drawn by:	Civil by:	Reviewed by:	Submitted by:

Drawing file no:
Drawing code:
Plot date: 19-NOV-2004 15:58
Plot by: eqbrown
Scale: 1:1(ISO)(ANSI)

U.S. ARMY ENGINEER DISTRICT
CORPS OF ENGINEERS
NEW YORK, NEW YORK

PN 59873
MILITARY ENTRANCE PROCESSING STATION (MEPS)
NIAGARA FALLS, NY

SITE PLAN

Sheet reference number:
C-2

Submitted by: eqbrown
Saf file: S:\Secure\military\Niagara Fall AFB\MEPS\Civil\meps_A1.dgn
Plot Date: 19-NOV-2004 15:58

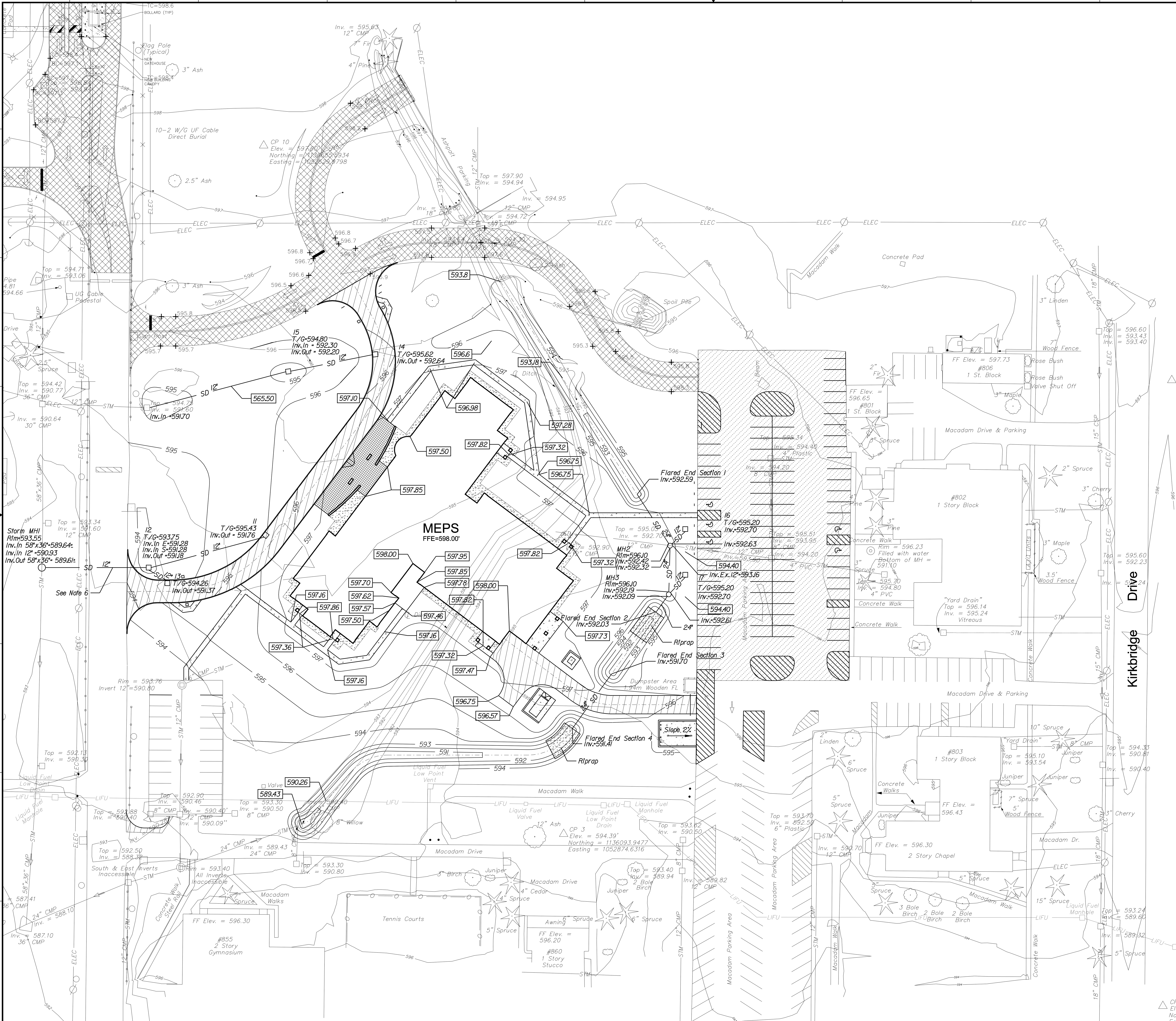

US Army Corps of Engineers
New York District

Legend

Existing	Proposed	
597	594	Contour
□	□	Inlet
◎	○	Manhole
STM	SD	Storm Drain Line

Notes:

1. Match existing grade where new pavement intersects existing pavement.
2. Exterior landings at all doorways shall match the finished floor at the building and shall slope away from the building at 2%. Unless otherwise indicated and except at doorways, finished grade at the building shall be 597.50.
3. The sidewalks shall have a cross slope of 1% away from the building.
4. The cross slope of the drop off road and the road to the mechanical room shall be 2%.
5. Drainage ditch shall have a bottom width of 4' with 3 horizontal to 1 vertical side slopes.
6. Pavement shall be sawcut and backfilled with select material to full depth with pavement replaced in kind.

30 15 0 30 60FT
SCALE: 1"= 30'

Designed by:	Date:
Dwn by:	Ckd by:
Reviewed by:	Drawing code:
Submitted by:	Plot date: 19-NOV-2004 15:59 Plot by: e3jetmwe Scale: 1.181102:1.000000

Size: | Rev.: | Drawing file no.:

U.S. ARMY ENGINEER DISTRICT
CORPS OF ENGINEERS
NEW YORK, NEW YORK

File name: S:\fileroom\military\Niagara Fall AFB\MEPS\Civil\meps_cg.dgn

PN 59873
MILITARY ENTRANCE PROCESSING STATION (MEPS)
NIAGARA FALLS, NY

GRADING PLAN

Sheet reference number:
C–3

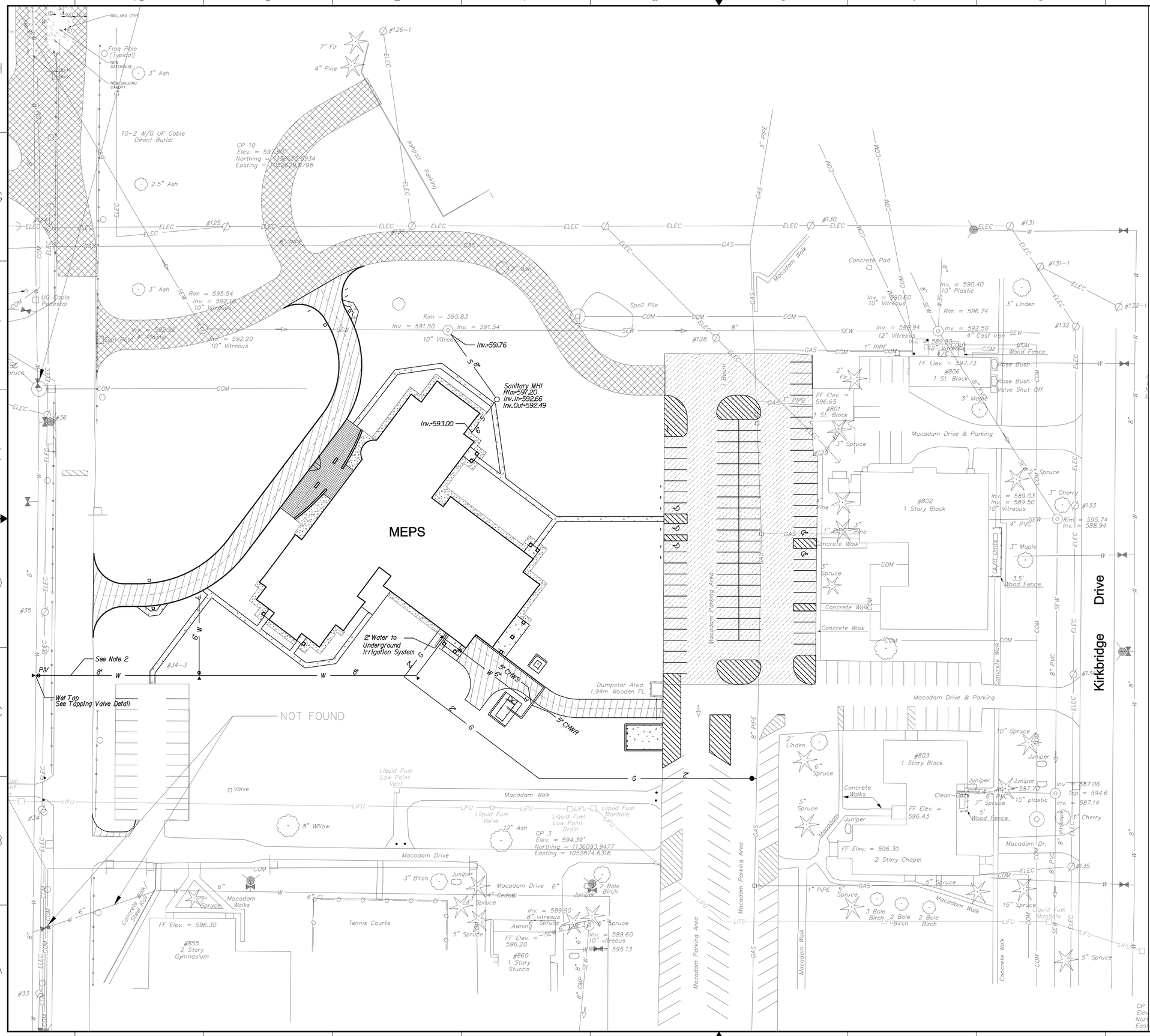

US Army Corps of Engineers
New York District

N

LEGEND

Existing	New	
—W—	— W —	Water line
		Gate Valve
	PIV	Post Indicator Valve
		Thrust Block
		Fire Hydrant
—SEW—	— S —	Sanitary Sewer
		Sanitary Sewer Manhole
8" PIPE	— G —	Gas line
		Gas valve

Notes:
1. The contractor shall verify the location and elevation of utilities prior to the start of construction.
2. Pavement shall be sawcut and backfilled with select material to full depth with pavement replaced in kind.

Symbol	Description	Date	Appr.

Designed by: | Date: | Size: | Rev.:
Dwn by: | Ckd by: | Drawing file no.:
Reviewed by: | Drawing code:
Submitted by: | Plot date: 19-NOV-2004 15:59 | Plot by: ebarrows | Scale: 1:1700/8000

U.S. ARMY ENGINEER DISTRICT
CORPS OF ENGINEERS
NEW YORK, NEW YORK

File name: S:\Division\Water\Niagara Falls\MEPS\Civil\meps_cu.dgn

PN 59873
MILITARY ENTRANCE PROCESSING STATION (MEPS)
NIAGARA FALLS, NY

UTILITY PLAN

30 15 0 30 60FT
SCALE: 1"= 30'

Sheet reference number:
C-4

Plot Date: 19-NOV-2004 15:59
Plot By: ebarrows
Submitted by: e3jenmae
pw:\\ford-oddmillcity.pw\niagara falls\#59873\Specs\meps.cu.dgn

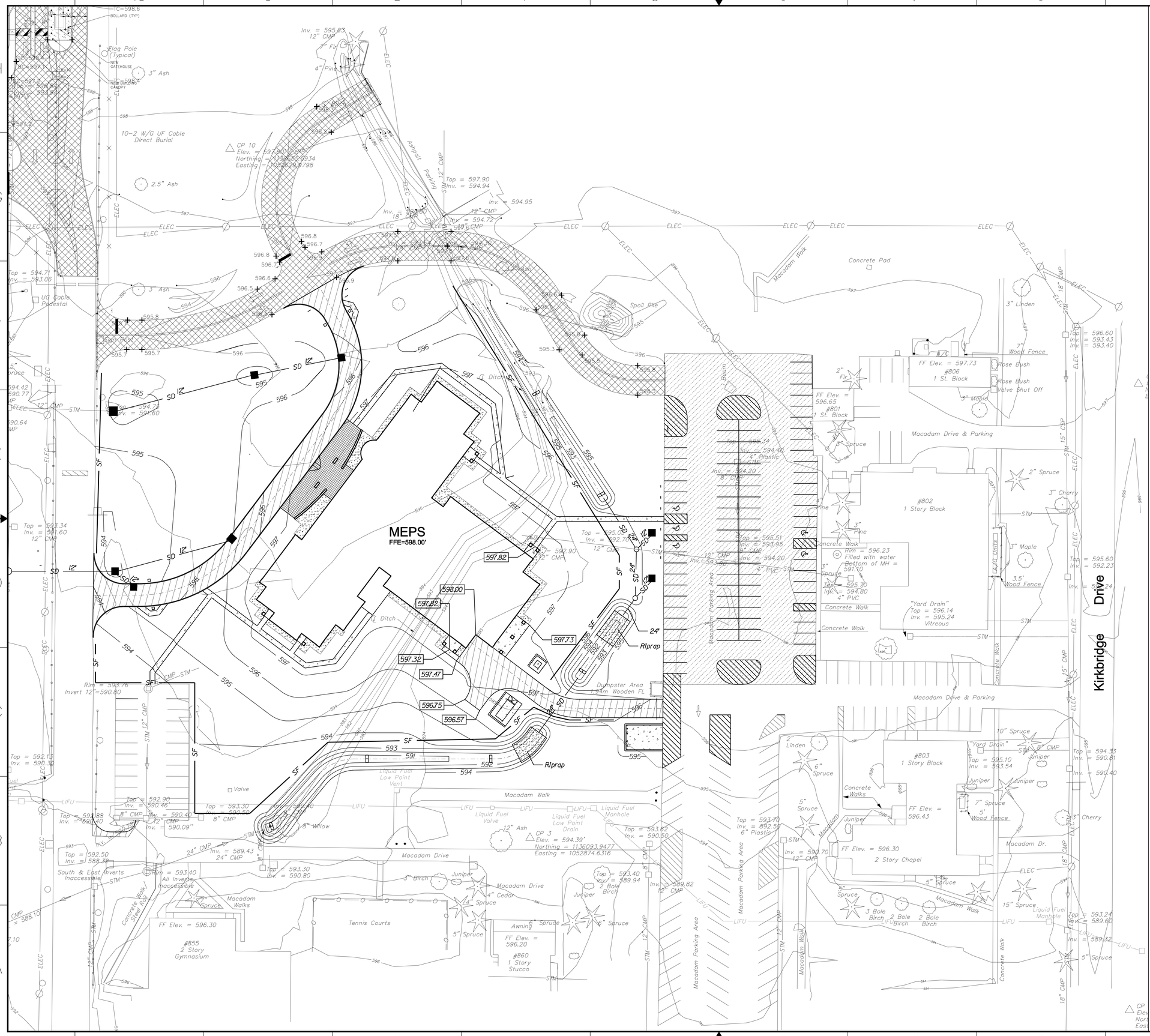

LEGEND

— SF —	Silt Fence
■	Inlet Protection
▫	Straw Bale

Note:
1.Silt fence,Inlet protection and straw bales shown are minimum. Contractor to be prepared to provide additional Storm Water Pollution Prevention measures in accordance with the approved Storm Water Pollution Prevention Plan at no additional cost to the Government.

US Army Corps of Engineers
New York District

Symbol	Description	Date	Appr.

U.S. ARMY ENGINEER DISTRICT
CORPS OF ENGINEERS
NEW YORK, NEW YORK

Designed by:		Date:	Size: Rev:
Dwn by:	Ckd by:	Drawing file no.:	
		Drawing code:	
Reviewed by:		Plot date: 19-NOV-2004 16:00	
Submitted by:		Plot by: eqstmwe	
		Plot scale: 1:30	
File name: S:\Source\military\Images_Fall\FUSRS\MEPS Civil\meps_ec.dgn			

MILITARY ENTRANCE PROCESSING STATION (MEPS)
PN 58973
NIAGARA FALLS, NY

EROSION AND SEDIMENT CONTROL PLAN

30 15 0 30 60FT
SCALE: 1"= 30'

Sheet reference number:
C-5

Submitted by: eqstmwe
Settler:admin1\Pettigore Fall AFBAMEPS\Civil\meps_ec.dgn
Plot Date: 19-NOV-2004 16:00

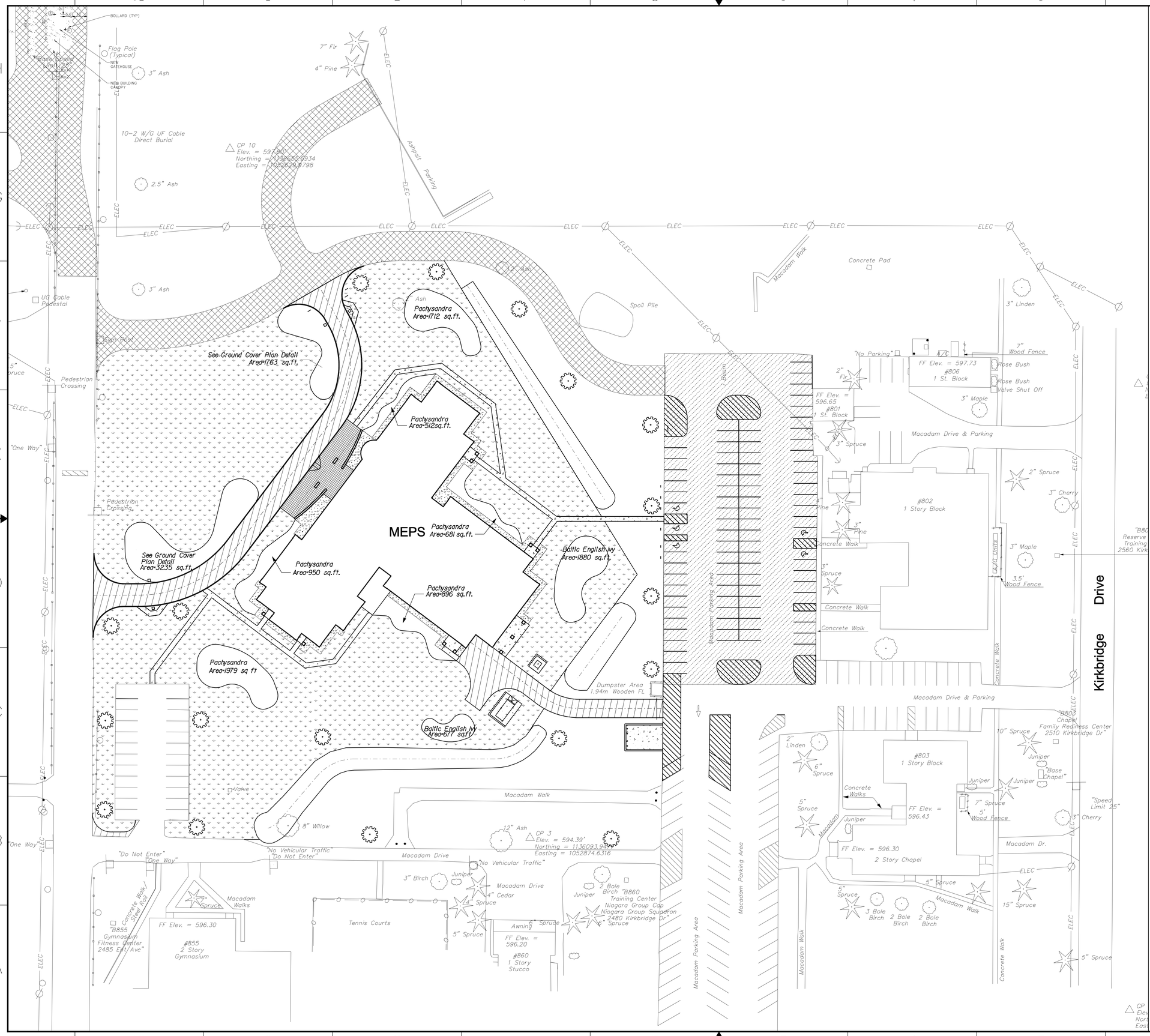

N

Legend

2" caliber Flowering White Oak

Sod

Notes:
1.Topsoil and seed all areas disturbed by construction which are not paved or sodded.
2.The area which is to be sodded and the area which is to have ground cover shall be sprinklered with an underground sprinkler system.Contractor to retain an underground irrigation system designer company to provide system layout for the site with design plans and details.Contractor to present this information with shop drawing submittals.Location of tap on existing water main.Irrigation plan and design calculations shall be approved by the Contracting Officer prior to construction.Items listed are approximate and should be determined by the irrigation company.
50 rotary heads (plus or minus) with 50' radius
1 or 2 clocks depending on the number of zones
solenoid valves
1" diameter PVC piping looped system
2" water supply main plus or minus
backflow preventer
Each zone shall have a maximum water consumption of 125 gal/min.The system shall be designed so that only one zone operates at a time.
3.Contractor to follow free form layout of ground cover approximately following plan layout.
4.Plant Quantities:
100 Acorus Gramineus "Variegatus"
100 Ferns
100 Festuca Glauca
100 Ice Blue Juniper
100 Mother Lode Juniper
120 Flats Pachysandra
60 Flats Baltic English Ivy

SCALE: 1"= 30'

US Army Corps of Engineers
New York District

Symbol	Description	Date	Appr.

U.S. ARMY ENGINEER DISTRICT
CORPS OF ENGINEERS
NEW YORK, NEW YORK

Designed by: | Date: | Size: | Rev:
Dwn by: | Ckd by: | Drawing file no.:
Reviewed by: | Drawing code:
Submitted by: | Plot date: 19-NOV-2004 16:05 | Plot by: dgerman | Scale: 1:30(1:300)
File name: S:\Missions\Military\Niagara Falls\FUSRAMEPS\Drawings\ecw.dgn

PN 58673
MILITARY ENTRANCE PROCESSING STATION (MEPS)
NIAGARA FALLS, NY

LANDSCAPE PLAN

Sheet reference number:
C-6

Plan Date: 19-NOV-2004 16:00
Submitted by: e3jetmee
S:\Files\Guadalupe\Antiguo Fall AFB\MEPS\C-1\Meps-Lands.dgn

HORIZONTAL ALIGNMENT DATA FOR CENTERLINE OF DROPOFF ROAD

	STATION	NORTHING	EASTING
Element: Linear			
POB ( )	0+00.00	1136291.80	1052518.55
PC ( )	0+37.76	1136291.93	1052556.31
Tangent Direction:	N 89°48′46″ E		
Tangent Length:	37.76		
Element: Circular			
PC ( )	0+37.76	1136291.93	1052556.31
PI ( )	0+87.42	1136292.09	1052605.97
CC ( )		1136391.92	1052555.98
PT ( )	1+29.94	1136331.75	1052635.85
Radius:	100.00		
Delta:	52°48′55″ Left		
Degree of Curvature(Arc):	57°17′45″		
Length:	92.18		
Tangent:	49.66		
Chord:	88.95		
Middle Ordinate:	10.43		
External:	11.65		
Tangent Direction:	N 89°48′46″ E		
Radial Direction:	S 0°11′14″ E		
Chord Direction:	N 63°24′19″ E		
Radial Direction:	S 53°00′09″ E		
Tangent Direction:	N 36°59′51″ E		
Element: Linear			
PT ( )	1+29.94	1136331.75	1052635.85
PC ( )	2+58.20	1136434.18	1052713.03
Tangent Direction:	N 36°59′51″ E		
Tangent Length:	128.26		
Element: Circular			
PC ( )	2+58.20	1136434.18	1052713.03
PI ( )	3+07.87	1136473.85	1052742.92
CC ( )		1136479.32	1052653.13
PT ( )	3+45.94	1136516.85	1052718.07
Radius:	75.00		
Delta:	67°01′20″ Left		
Degree of Curvature(Arc):	76°23′40″		
Length:	87.73		
Tangent:	49.66		
Chord:	82.81		
Middle Ordinate:	12.47		
External:	14.95		
Tangent Direction:	N 36°59′51″ E		
Radial Direction:	S 53°00′09″ E		
Chord Direction:	N 3°29′11″ E		
Radial Direction:	N 59°58′31″ E		
Tangent Direction:	N 30°01′29″ W		
Element: Linear			
PT ( )	3+45.94	1136516.85	1052718.07
POE ( )	3+76.07	1136542.94	1052702.99
Tangent Direction:	N 30°01′29″ W		
Tangent Length:	30.14		

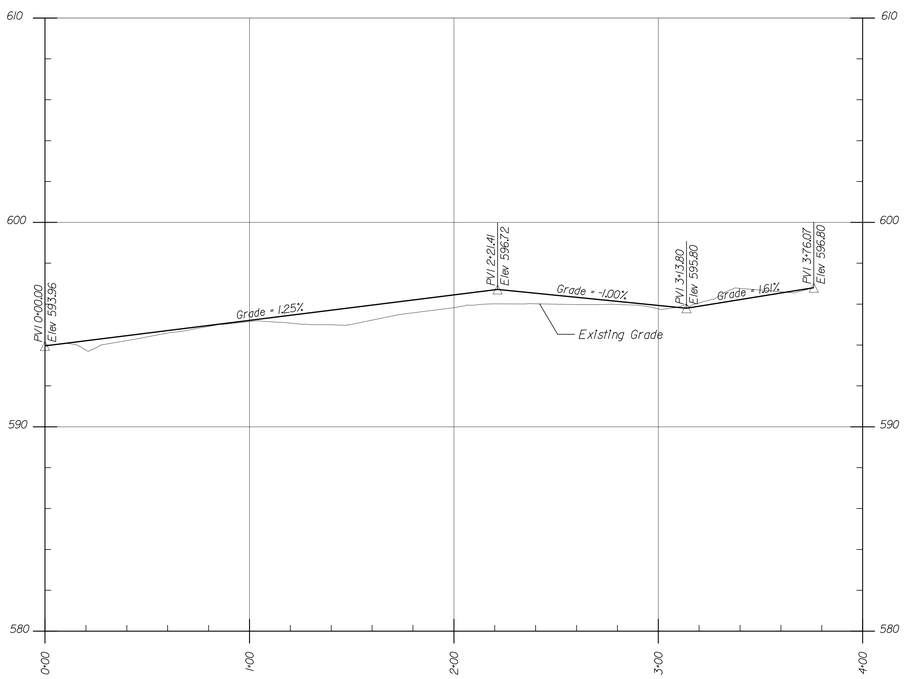

Drop Off Road Centerline Profile

Horiz.: 30 15 0 30 60 SCALE: 1" = 30'

Vert.: 3 1.5 0 3 6 SCALE: 1" = 3'

HORIZONTAL ALIGNMENT DATA FOR CENTERLINE OF ROAD TO MECHANICAL ROOM

	STATION	NORTHING	EASTING
Element: Linear			
POB ( )	0+00.00	1136199.45	1052982.86
PC ( )	0+68.41	1136199.48	1052914.45
Tangent Direction:	N 89°58′31″ W		
Tangent Length:	68.41		
Element: Circular			
PC ( )	0+68.41	1136199.48	1052914.45
PI ( )	0+85.13	1136199.49	1052897.73
CC ( )		1136249.48	1052914.47
PT ( )	1+00.68	1136209.55	1052884.38
Radius:	50.00		
Delta:	36°58′31″ Right		
Degree of Curvature(Arc):	114°35′30″		
Length:	32.27		
Tangent:	16.72		
Chord:	31.71		
Middle Ordinate:	2.58		
External:	2.72		
Tangent Direction:	N 89°58′31″ W		
Radial Direction:	N 0°01′29″ E		
Chord Direction:	N 71°29′16″ W		
Radial Direction:	N 37°00′00″ E		
Tangent Direction:	N 53°00′00″ W		
Element: Linear			
PT ( )	1+00.68	1136209.55	1052884.38
POE ( )	1+74.10	1136253.74	1052825.74
Tangent Direction:	N 53°00′00″ W		
Tangent Length:	73.42		

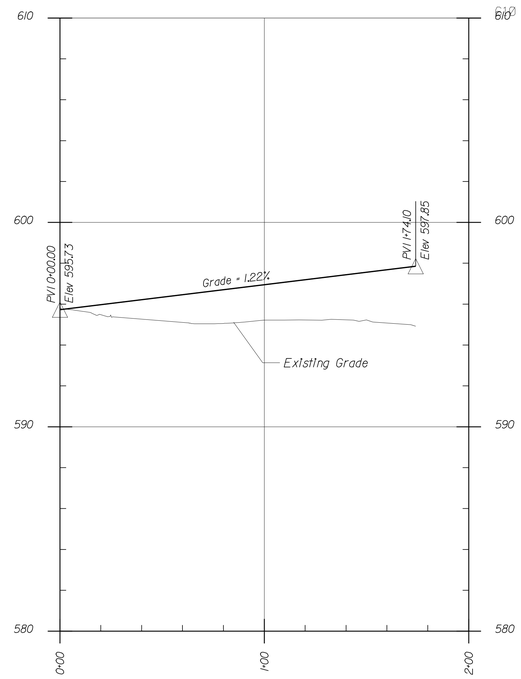

Road to Mechanical Room Centerline Profile

Horiz.: 30 15 0 30 60 SCALE: 1" = 30'

Vert.: 3 1.5 0 3 6 SCALE: 1" = 3'

US Army Corps of Engineers New York District

Symbol	Description	Date	App.

U.S. ARMY ENGINEER DISTRICT
CORPS OF ENGINEERS
NEW YORK, NEW YORK

Designed by: | Date: | Size: | Rev.:
Dwn by: | Ckd by: | Drawing file no.:
Reviewed by: | Drawing code:
Submitted by: | Plot date: 19-NOV-2004 14:01 | Plot by: edjenkwe | Scale: 1:1(ISO)(1000)

File name: S:\Services\military\Niagara_Falls\MEPS\Civil\road_0.dgn

MILITARY ENTRANCE PROCESSING STATION (MEPS)
NIAGARA FALLS, NY

PN 58873

ROAD LAYOUT AND PROFILE

Sheet reference number: C7

Submitted by: edjenkwe
Satellite:admin1(usr)ankiqore Fail AFBANEQ:SPC:11dfmesa.1.1:dgn
Plot Date: 19-NOV-2004 16:01

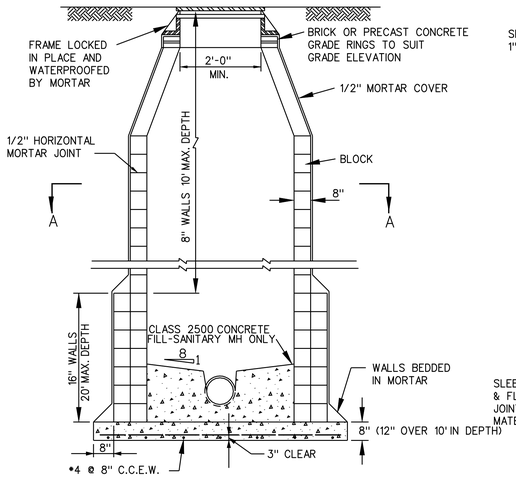

FRONT VIEW

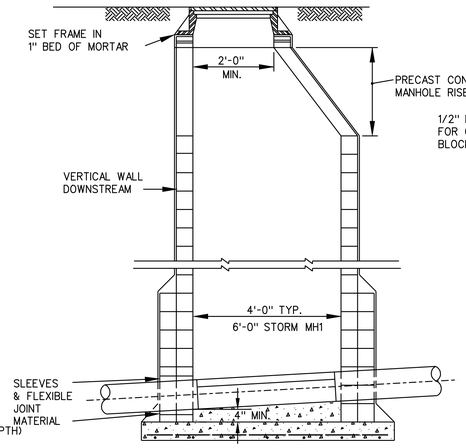

SIDE VIEW

SECTIONAL ELEVATION OF CONCRETE BLOCK MANHOLE

N.T.S.

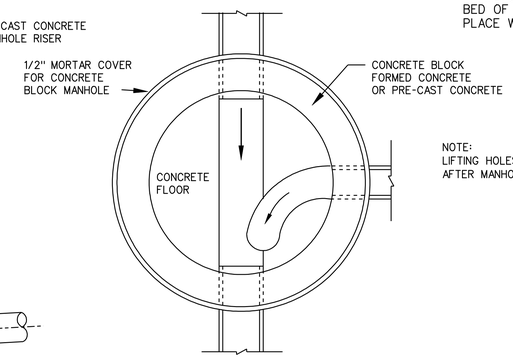

SECTION A-A

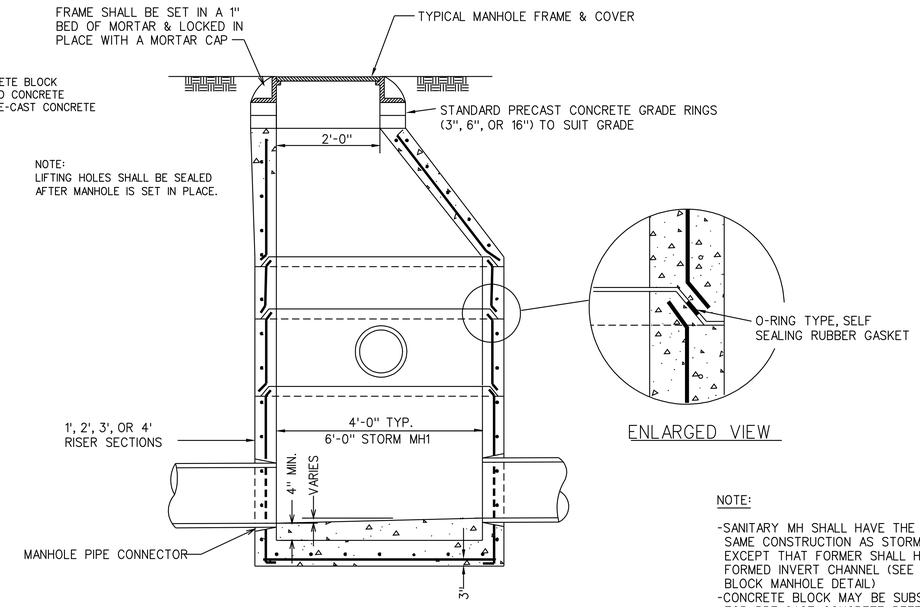

ENLARGED VIEW

PRE-CAST CONCRETE STORM MANHOLE

NTS

NOTE:

- SANITARY MH SHALL HAVE THE SAME CONSTRUCTION AS STORM MH EXCEPT THAT FORMER SHALL HAVE A FORMED INVERT CHANNEL (SEE CONCRETE BLOCK MANHOLE DETAIL)
- CONCRETE BLOCK MAY BE SUBSTITUTED FOR PRE-CAST CONCRETE, REFER TO SANITARY MANHOLE DETAIL.REFER TO CONCRETE BLOCK MANHOLE DETAIL.

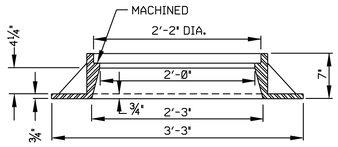

SECTION B-B

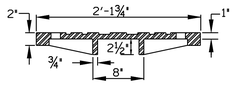

SECTION C-C

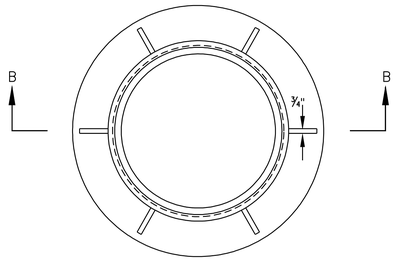

PLAN OF FRAME

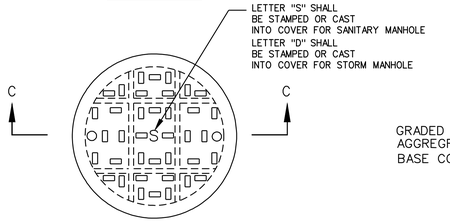

PLAN OF COVER

MANHOLE FRAME AND COVER

N.T.S.

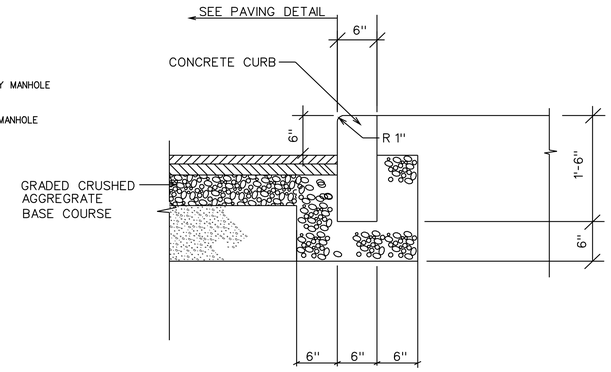

CURB DETAIL

N.T.S.

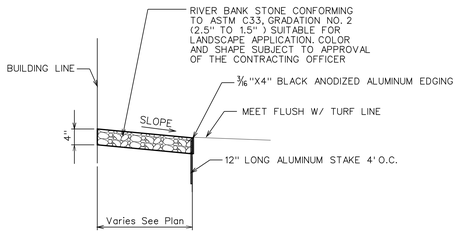

DRIP STRIP

N.TS

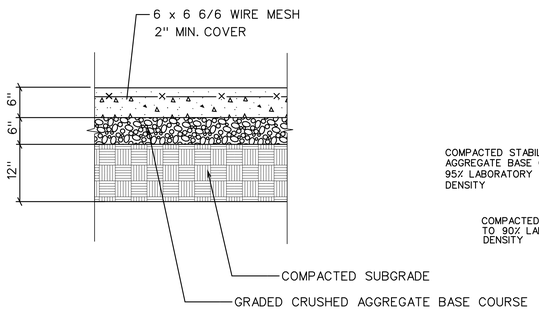

CONCRETE CHILLER/TRANSFORMER PAD DETAIL

N.T.S.

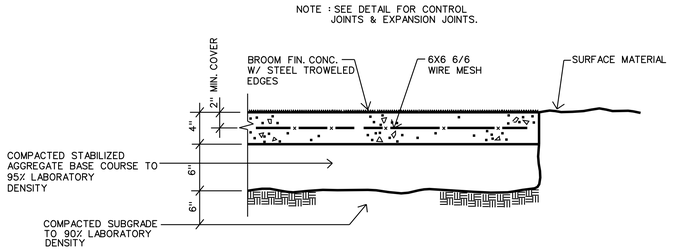

CONC. WALK DETAIL

N.T.S.

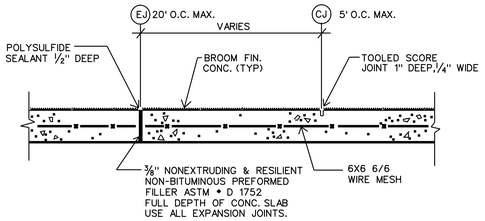

E.J.-C.J. DETAIL

N.T.S.

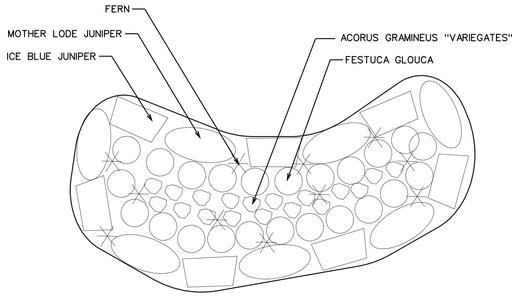

GROUND COVER PLAN

N.T.S.

US Army Corps of Engineers
New York District

Symbol	Description	Date	Appr.

Size	Rev.
Date:	
Drawing file no.:	
Drawing code:	
Prod date: 19-NOV-2004 16:01	
Plot by: eqtetmwe	
Style: G:\BMP\STANDARD.CTB	

U.S. ARMY ENGINEER DISTRICT
CORPS OF ENGINEERS
NEW YORK, NEW YORK

Designed by: | Dwn by: | Ckd by: | Reviewed by: | Submitted by:

File name: S:\Branch\military\Niagara Falls\PN\MERS Cont\mers_D.dgn

MILITARY ENTRANCE PROCESSING STATION (MEPS)
NIAGARA FALLS, NY
PN 58973

SITE DETAILS

Sheet reference number:
C-8

Submitted by: eqtetmwe
Plot Date: 19-NOV-2004 16:01
Settings:admin\workspaces Fall AFBAMEPS\Plans.12.dgn

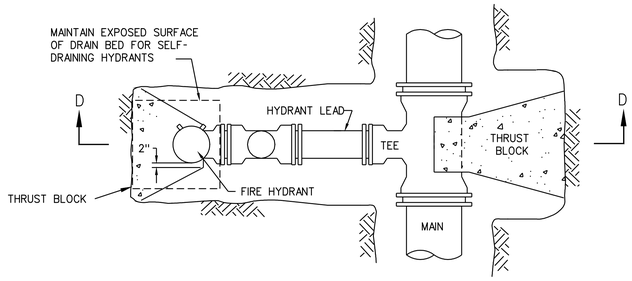

PLAN

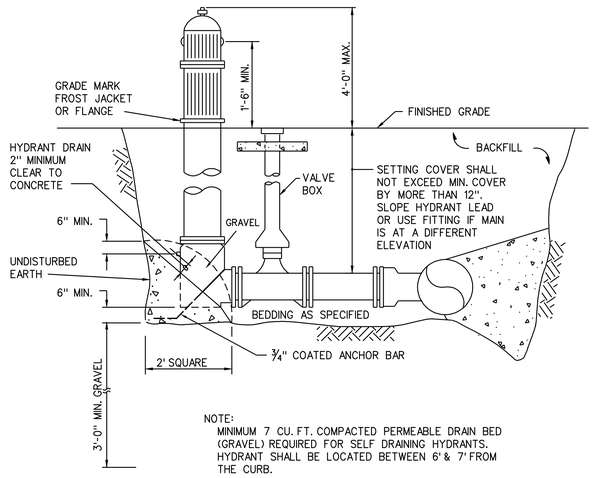

NOTE:
MINIMUM 7 CU. FT. COMPACTED PERMEABLE DRAIN BED (GRAVEL) REQUIRED FOR SELF DRAINING HYDRANTS. HYDRANT SHALL BE LOCATED BETWEEN 6' & 7' FROM THE CURB.

SECTION D-D

FIRE HYDRANT ASSEMBLY

N.T.S.

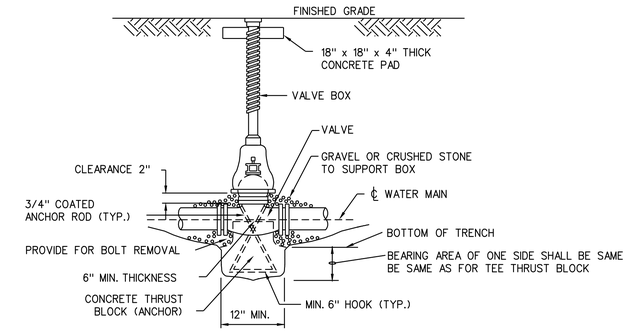

VALVE AND BOX

N.T.S.

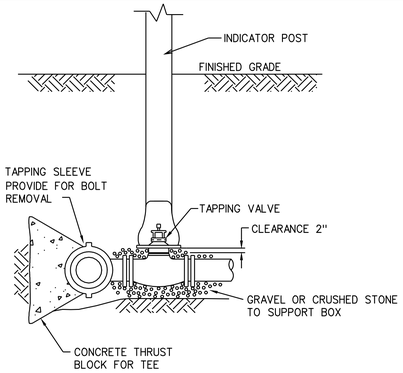

TAPPING VALVE AND SLEEVE

N.T.S.

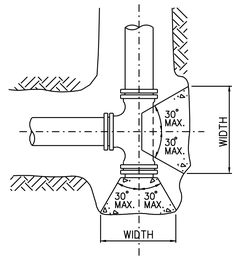

TYPICAL TEE & CAP

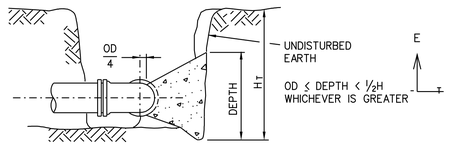

TYPICAL SECTION

NOTE: BEARING AREAS ARE BASED ON 200 P.S.I. TEST PRESSURE, A FACTOR OF SAFETY OF 1.5 AND SOIL RESISTANCE OF 2000 P.S.F.. IF WEAK (LESS THAN 2000 P.S.F. RESISTANCE) SOIL POCKETS ARE ENCOUNTERED, THE CONTRACTOR SHALL INCREASE THE BEARING AREAS SHOWN TO PREVENT MOVEMENT UNDER TEST OR OPERATING PRESSURES.

PIPE FITTING	MINIMUM BEARING AREA (SQ. FT.)
45° BEND	4.0
6" TEE	5.0
8" TEE	8.5

THRUST BLOCKS SHALL BE CLASS 2500 CONCRETE (MINIMUM)

THRUST BLOCKS

N.T.S.

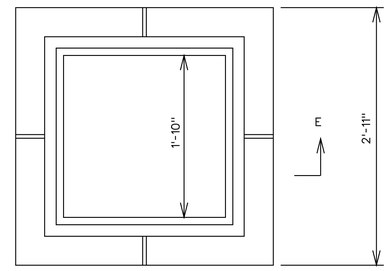

PLAN

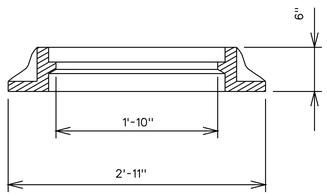

SECTION E-E

FRAME

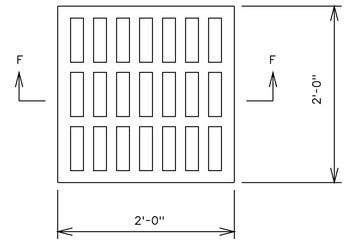

PLAN

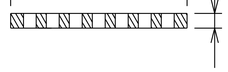

SECTION F-F

GRATE

TOTAL WEIGHT 400 LBS MIN.

TYPICAL FRAME AND GRATE

STORM DRAIN INLET

NTS

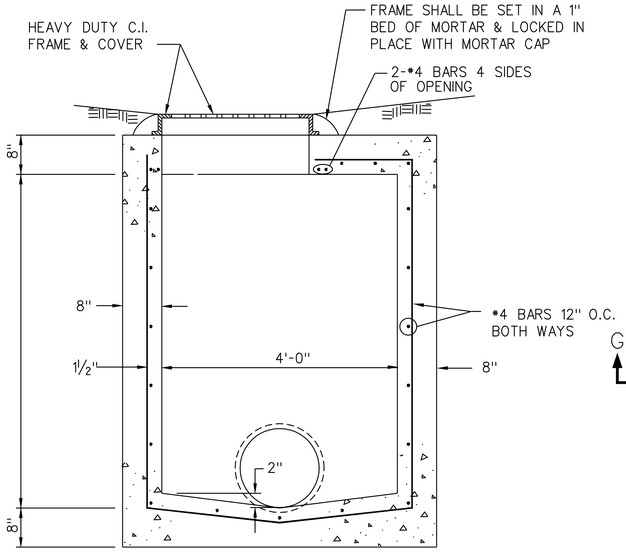

SECTION G-G

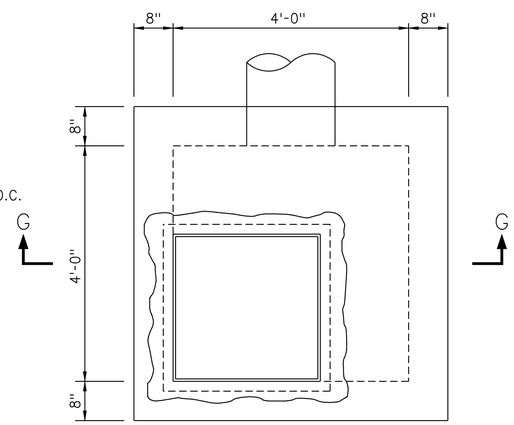

PLAN

TYPICAL STORM DRAIN INLET

NTS

US Army Corps of Engineers
New York District

Symbol	Description	Date	Appr.

Designed by:
Dwn by:
Ckd by:
Reviewed by:
Submitted by:
Date:
Size:
Rev:
Drawing file no.
Drawing code:
Plot date: 19-NOV-2004 10:01
Plot by: admmcw
Scale: 0.8000170000

File name: S:\Mission\military\Niagara Falls\FIB\MEPS\Drawings\C9.dgn

U.S. ARMY ENGINEER DISTRICT
CORPS OF ENGINEERS
NEW YORK, NEW YORK

PN 58673
MILITARY ENTRANCE PROCESSING STATION (MEPS)
NIAGARA FALLS, NY

SITE DETAILS

Sheet reference number:
C–9

Plot Date: 19-NOV-2004 (ecl)
Submitted by: admmcw
S:\Mission\military\Niagara Falls\FIB\MEPS\Drawings\C3.dgn

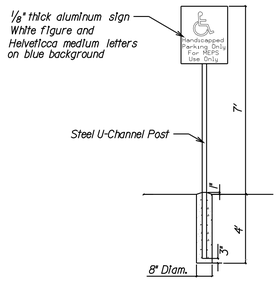

HANDICAPPED PARKING SIGN
NTS

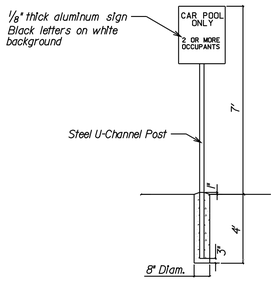

CAR POOL SIGN
NTS

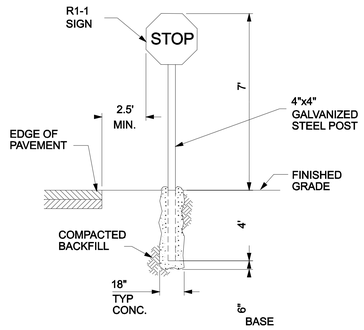

"STOP" SIGN
NTS

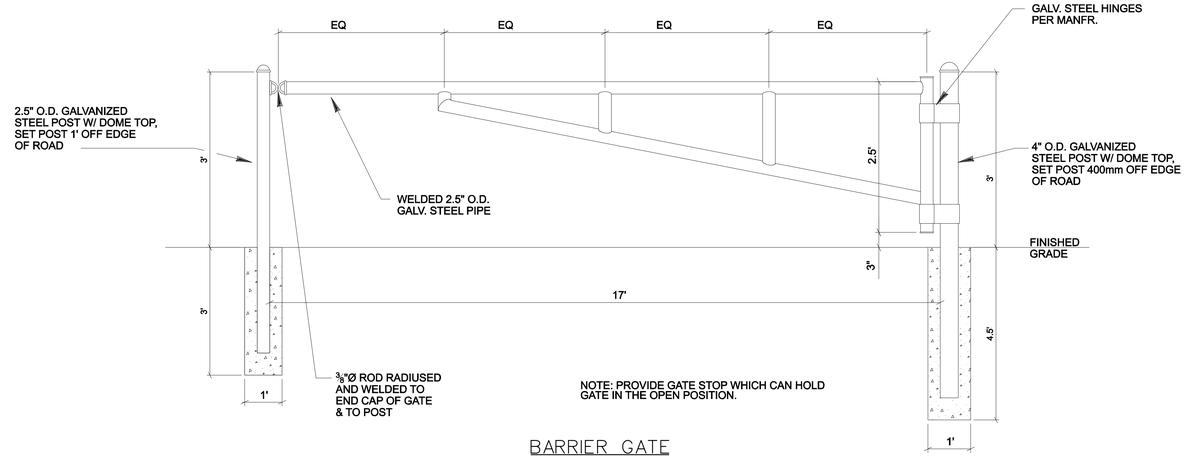

NOTE: PROVIDE GATE STOP WHICH CAN HOLD GATE IN THE OPEN POSITION.

BARRIER GATE
NTS

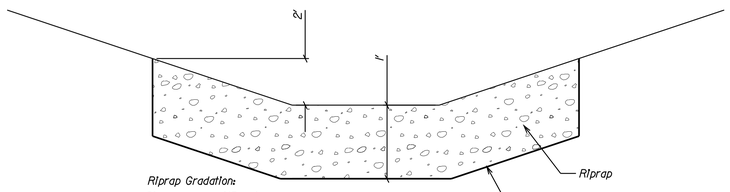

Riprap Gradation:

Size	%Passing
12"	100
9"	100-70
8"	80-50
7"	50-30
5"	15-0

RIPRAP
NTS

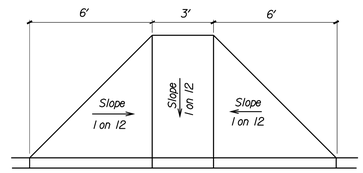

PLAN

HANDICAPPED CURB RAMP
NTS

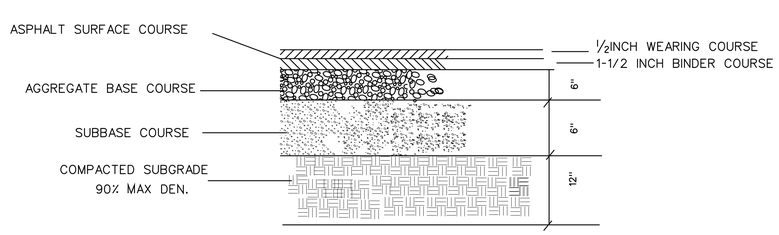

PAVING DETAIL FOR ACCESS ROADS
N.T.S.

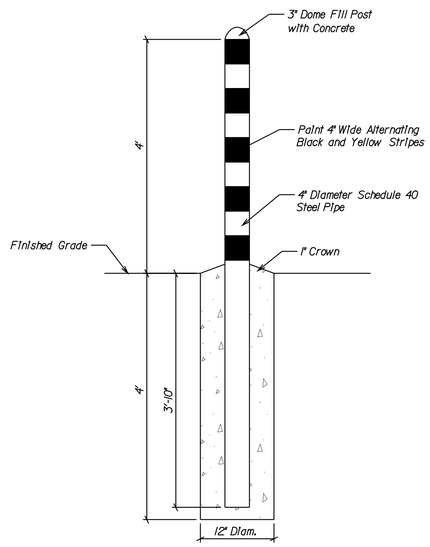

BOLLARD
NTS

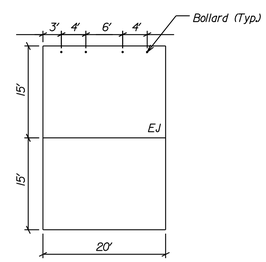

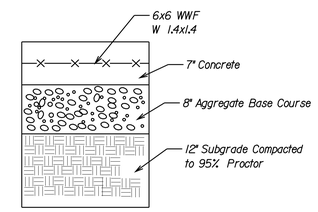

DUMPSTER PAD
NTS

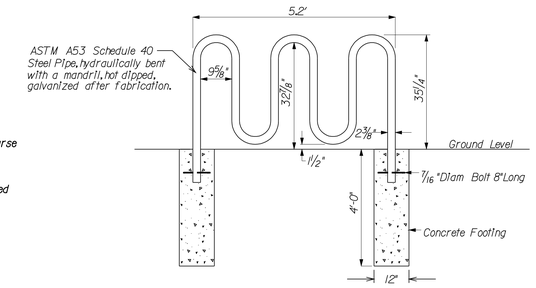

BIKE RACK
NTS

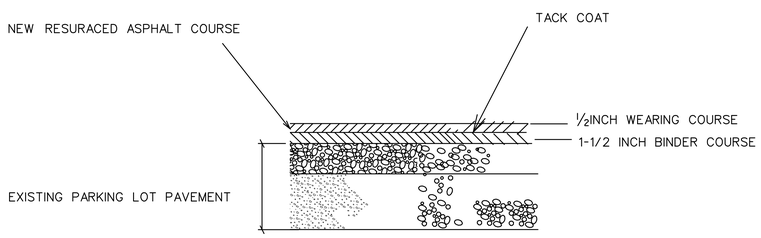

RESURFACING DETAIL FOR PARKING LOT
N.T.S.

NOTE : SEE DETAIL FOR CONTROL JOINTS & EXPANSION JOINTS. COORDINATE CONTRACTION JOINTS WITH STAMP PATTERN

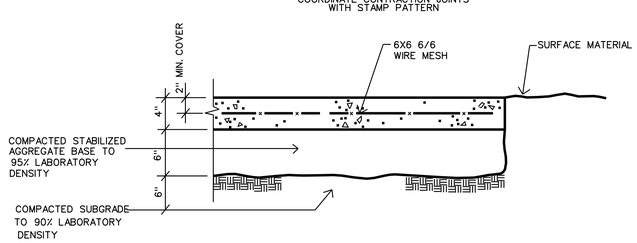

STAMP CONC. DETAIL
N.T.S.

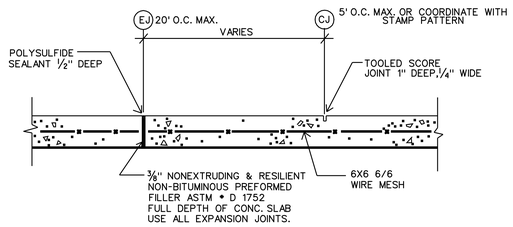

STAMPED CONC. E.J.-C.J. DETAIL
N.T.S.

US Army Corps of Engineers
New York District

Symbol	Description	Date	Appr.

Designed by:		Date:	Size:
Dwn by:	Ckd by:	Drawing file no.:	Rev.
Reviewed by:		Drawing code:	
Submitted by:		Plot date: 19-NOV-2004 15:58 Plot by: eijetmwe Style: C,B,BITS,300000	

U.S. ARMY ENGINEER DISTRICT
CORPS OF ENGINEERS
NEW YORK, NEW YORK

File name: S:\Services\military\Niagara Falls\AFRB\MEPS\Civil\maps\A-1.dgn

PN 58973
MILITARY ENTRANCE PROCESSING STATION (MEPS)
NIAGARA FALLS, NY

SITE DETAILS

Sheet reference number:
C–10

Submitted by: eijetmwe
Latter-Assemblies:pattlogan Fail AFBANEPS/Civil/maps.A-1.dgn
Plot Date: 19-NOV-2004 15:58

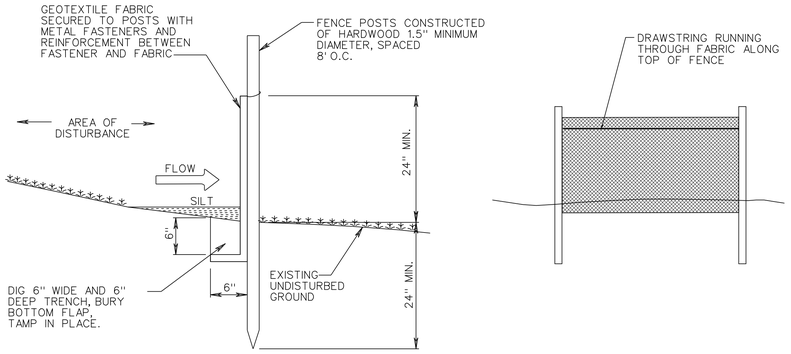

SILT FENCE NOTES:

1. SILT FENCE SHALL BE INSTALLED SO THAT RUNOFF FROM DISTURBED AREAS DO NOT BYPASS THE ENDS OF THE BARRIER.
2. THE GEOTEXTILE FABRIC SHALL BE RECOMMENDED BY THE MANUFACTURER FOR SUCH USE.
3. THE FABRIC SHALL BE SECURELY FASTENED TO THE POSTS USING A SYSTEM OF METAL FASTENERS (NAILS OR STAPLES) AND A HIGH STRENGTH REINFORCEMENT MATERIAL (NYLON WEBBING, GROMMETS, WASHERS ETC.) PLACED BETWEEN THE FASTENER AND THE GEOTEXTILE FABRIC. THE FASTENING SYSTEM SHALL RESIST TEARING AWAY FROM THE POST. THE FABRIC SHALL INCORPORATE A DRAWSTRING IN THE TOP PORTION OF THE FENCE FOR ADDED STRENGTH.
4. ENDS OF INDIVIDUAL ROLLS OF GEOTEXTILE FABRIC SHALL BE SECURELY FASTENED TO A COMMON POST IN SUCH A WAY THAT THERE IS NOT A GAP IN FILTERING ABILITY.
5. REFER TO EROSION CONTROL PLAN FOR LOCATION OF SILT FENCE.

SILT FENCE CONSTRUCTION AND INSTALLATION DETAIL

N.T.S.

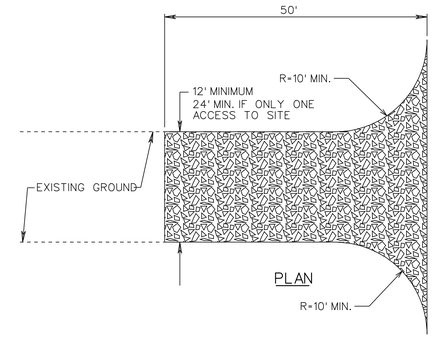

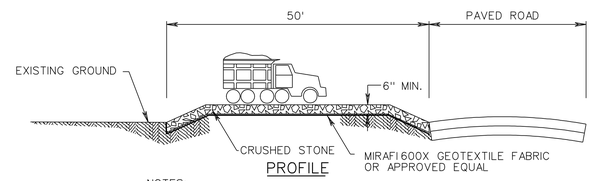

NOTES:

1. PROVIDE APPROPRIATE TRANSITION BETWEEN STABILIZED CONSTRUCTION ENTRANCE AND PUBLIC R.O.W.
2. CRUSHED STONE SHALL BE ASTM C-33, SIZE NO. 2 (1.5"-2.5") OR NO. 3 (1"-2").
3. THE STABILIZED CONSTRUCTION DRIVEWAY SHALL BE MAINTAINED IN A CONDITION WHICH WILL PREVENT TRACKING OF SEDIMENT ONTO THE ADJACENT PAVEMENT.
4. GRADE THE SURROUNDING AREA TO DIVERT STORM WATER RUNOFF AWAY FROM THE STABILIZED CONSTRUCTION ENTRANCE.
5. A STABILIZED CONSTRUCTION ENTRANCE SHALL BE LOCATED AT EVERY POINT WHERE TRAFFIC ENTERS OR LEAVES THE CONSTRUCTION SITE. VEHICLES LEAVING THE SITE MUST TRAVEL OVER THE ENTIRE LENGTH OF THE STABILIZED CONSTRUCTION ENTRANCE.

STABILIZED CONSTRUCTION ENTRANCE

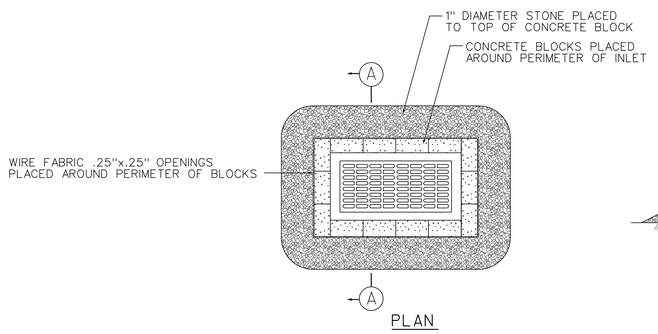

INLET PROTECTION NOTE:
PLACE INLET PROTECTION AT LOCATIONS SHOWN ON THE SOIL EROSION AND SEDIMENT CONTROL PLAN.

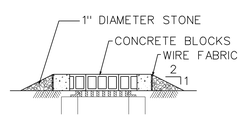

INLET PROTECTION, CONCRETE BLOCK BARRIER

N.T.S.

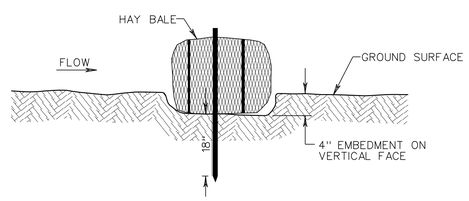

EMBEDDING DETAIL

NOTES:

1. HAY BALES SHALL BE INSTALLED SO WATER CANNOT BYPASS THE ENDS OF THE BARRIER.
2. INSPECTION SHALL BE FREQUENT AND REPAIR OR REPLACEMENT SHALL BE MADE WHEN NEEDED.
3. HAY BALES SHALL BE PLACED IN A ROW WITH ENDS TIGHTLY ABUTTING THE ADJACENT BALES.
4. EACH HAY BALE SHALL BE EMBEDDED IN THE SOIL A MINIMUM OF 4 INCHES.
5. HAY BALES SHALL REMAIN IN PLACE FOR THE DURATION OF THE PROJECT UNLESS OTHERWISE INSTRUCTED BY THE CONTRACTING OFFICER.

HAY BALES SEDIMENT BARRIERS

N.T.S.

US Army Corps of Engineers
New York District

Symbol	Description	Date	Appr.

U.S. ARMY ENGINEER DISTRICT
CORPS OF ENGINEERS
NEW YORK, NEW YORK

Designed by: | Date: | Size: | Rev.:
Dwn by: | Ckd by: | Drawing file no.:
Reviewed by: | Drawing code:
Submitted by: | Plot date: 19-NOV-2004 15:58 | Plot by: eijelmwe | Plot file: 1.STD.C-00000
File name: S:\Benson\military\Niagara Falls\AFB\MEPS\Civil\mep-IE.dgn

PN 58573
MILITARY ENTRANCE PROCESSING STATION (MEPS)
NIAGARA FALLS AIR RESERVE BASE

SOIL EROSION AND SEDIMENTATION CONTROL DETAILS

Sheet reference number:
C–11

Plot Date: 19-NOV-2004 15:58
Submitted by: eijelmwe
Satterlee\admin\nyd\philippe\ Fall AFB\MEPS\Civil\mep-IE.dgn

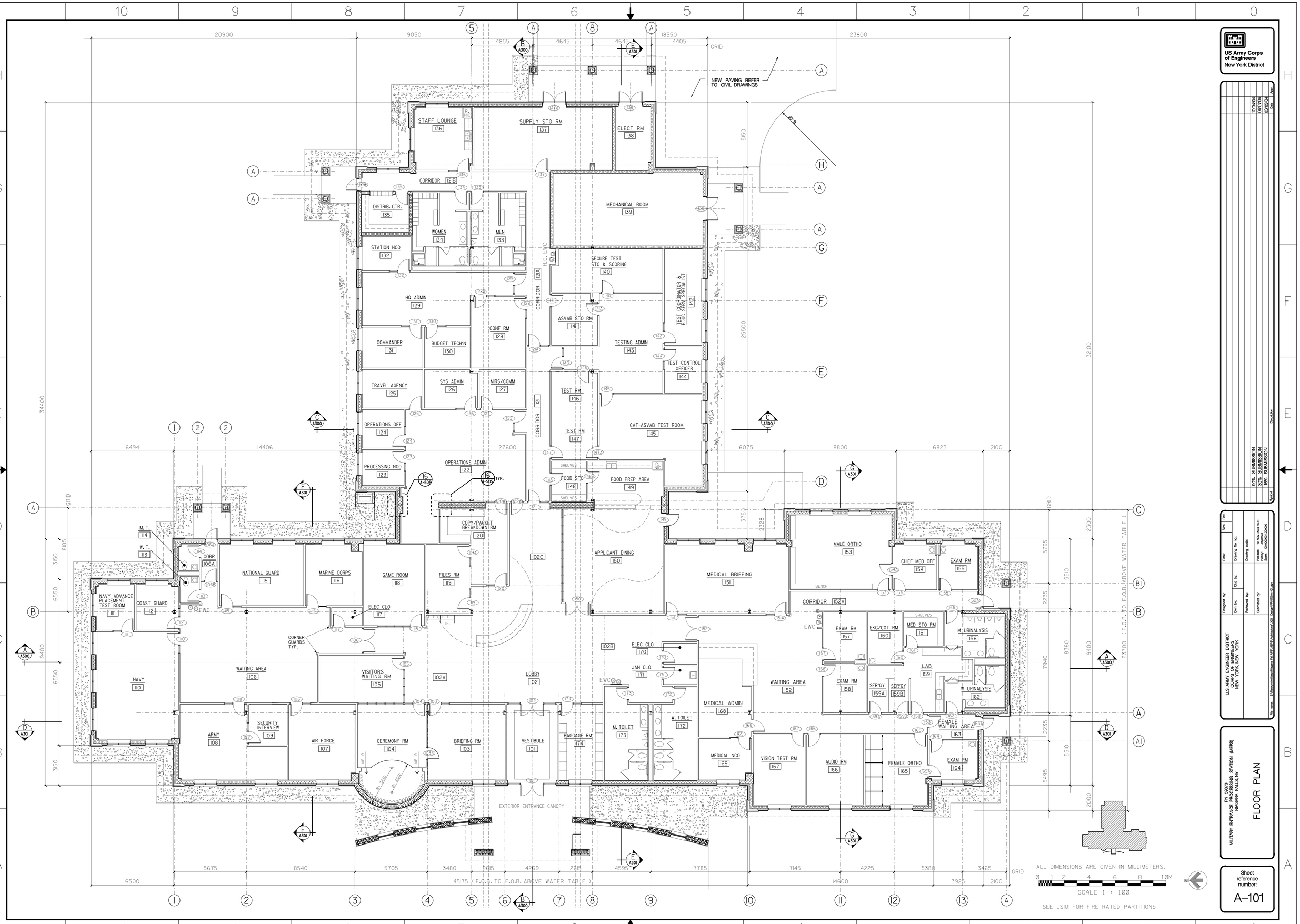
US Army Corps of Engineers
New York District
STAFF LOUNGE 136
SUPPLY STO RM 137
ELECT RM 138
CORRIDOR 121B
DISTRIB. CTR. 135
WOMEN 134
MEN 133
MECHANICAL ROOM 139
STATION NCO 132
SECURE TEST STO & SCORING 140
HQ ADMIN 129
CORRIDOR 121A
ASVAB STO RM 141
TEST COORDINATOR & EDUC SERV SPECIALIST 142
CONF RM 128
COMMANDER 131
BUDGET TECH'N 130
TESTING ADMIN 143
TEST CONTROL OFFICER 144
TRAVEL AGENCY 125
SYS ADMIN 126
MIRS/COMM 127
TEST RM 146
OPERATIONS OFF 124
CORRIDOR 121
TEST RM 147
CAT-ASVAB TEST ROOM 145
PROCESSING NCO 123
OPERATIONS ADMN 122
FOOD STO 148
FOOD PREP AREA 149
COPY/PACKET BREAKDOWN RM 120
APPLICANT DINING 150
M. T. 114
W. T. 113
CORR 106A
NATIONAL GUARD 115
MARINE CORPS 116
GAME ROOM 118
FILES RM 119
MEDICAL BRIEFING 151
MALE ORTHO 153
CHIEF MED OFF 154
EXAM RM 155
NAVY ADVANCE PLACEMENT TEST ROOM 111
COAST GUARD 112
ELEC CLO 117
CORRIDOR 152A
CORNER GUARDS TYP.
EXAM RM 157
EKG/COT RM 160
MED STO RM 161
M. URINALYSIS 156
ELEC CLO 170
JAN CLO 171
WAITING AREA 152
EXAM RM 158
SER'GY 159A
SER'GY 159B
LAB 159
W. URINALYSIS 162
WAITING AREA 106
VISITORS WAITING RM 105
LOBBY 102
NAVY 110
MEDICAL ADMIN 168
W. TOILET 172
M. TOILET 173
FEMALE WAITING AREA 163
SECURITY INTERVIEW 109
ARMY 108
AIR FORCE 107
CEREMONY RM 104
BRIEFING RM 103
VESTIBULE 101
BAGGAGE RM 174
MEDICAL NCO 169
VISION TEST RM 167
AUDIO RM 166
FEMALE ORTHO 165
EXAM RM 164
EXTERIOR ENTRANCE CANOPY
NEW PAVING REFER TO CIVIL DRAWINGS
45175 (F.O.B. TO F.O.B. ABOVE WATER TABLE)
23700 (F.O.B. TO F.O.B. ABOVE WATER TABLE)
ALL DIMENSIONS ARE GIVEN IN MILLIMETERS.
SCALE 1 : 100
SEE LS101 FOR FIRE RATED PARTITIONS
Issue: 90% SUBMISSION
Issue: 95% SUBMISSION
Issue: 95% SUBMISSION
Date: 19/04/04
Date: 19/05/04
Date: 09/09/04
Description
Designed by:
Date:
Size:
Rev:
Drawn by:
Cad by:
Drawing file no.:
Drawing code:
Reviewed by:
Submitted by:
Plot date: 19-NOV-2004 15:41
Plot by: eclemwe
File name: S:\Benson\Military\Niagara Falls\MEPS\Architectural\A-101.dwg
U.S. ARMY ENGINEER DISTRICT
CORPS OF ENGINEERS
NEW YORK, NEW YORK
PN 58873
MILITARY ENTRANCE PROCESSING STATION (MEPS)
NIAGARA FALLS, NY
FLOOR PLAN
Sheet reference number:
A-101

MATCH LINE REFER DWG. A-101C

MATCH LINE REFER DWG. A-101A

PROVIDE THE FOLLOWING FOR THE DX UNIT
- 1200 mm WX 800 mm DX 150mm THICK CONCRETE PAD
- 1500 mm WX1100 mm DX 1350mm HIGH CHAIR LINK FENCE ENCLOSURE WITH TOP PANEL AND ONE 900mm WIDE LOCKABLE GATE

CORNER GUARDS TYP.

MATCH LINE REFER DWG. A-101A

MATCH LINE REFER DWG. A-101B

LEGEND

- GYPSUM WALL PARTITION
- CMU WALL
- WINDOW TYPE (REFER TO DWG. A-604)
- PARTITION TYPE (REFER TO DWG. A-605)
- ROOM NUMBER
- DOOR W/ SIDELIGHT AND DOOR NUMBER

PART "A"

ALL DIMENSIONS ARE GIVEN IN MILLIMETERS.

SCALE 1 : 50

US Army Corps of Engineers
New York District

U.S. ARMY ENGINEER DISTRICT
CORPS OF ENGINEERS
NEW YORK, NEW YORK

MILITARY ENTRANCE PROCESSING STATION (MEPS)
PN 58973
NIAGARA FALLS, NY

FLOOR PLAN PART "A"

Sheet reference number:
A-101A

Plot Date: 19-NOV-2004 15:41
Submitted by: e3jetmwe

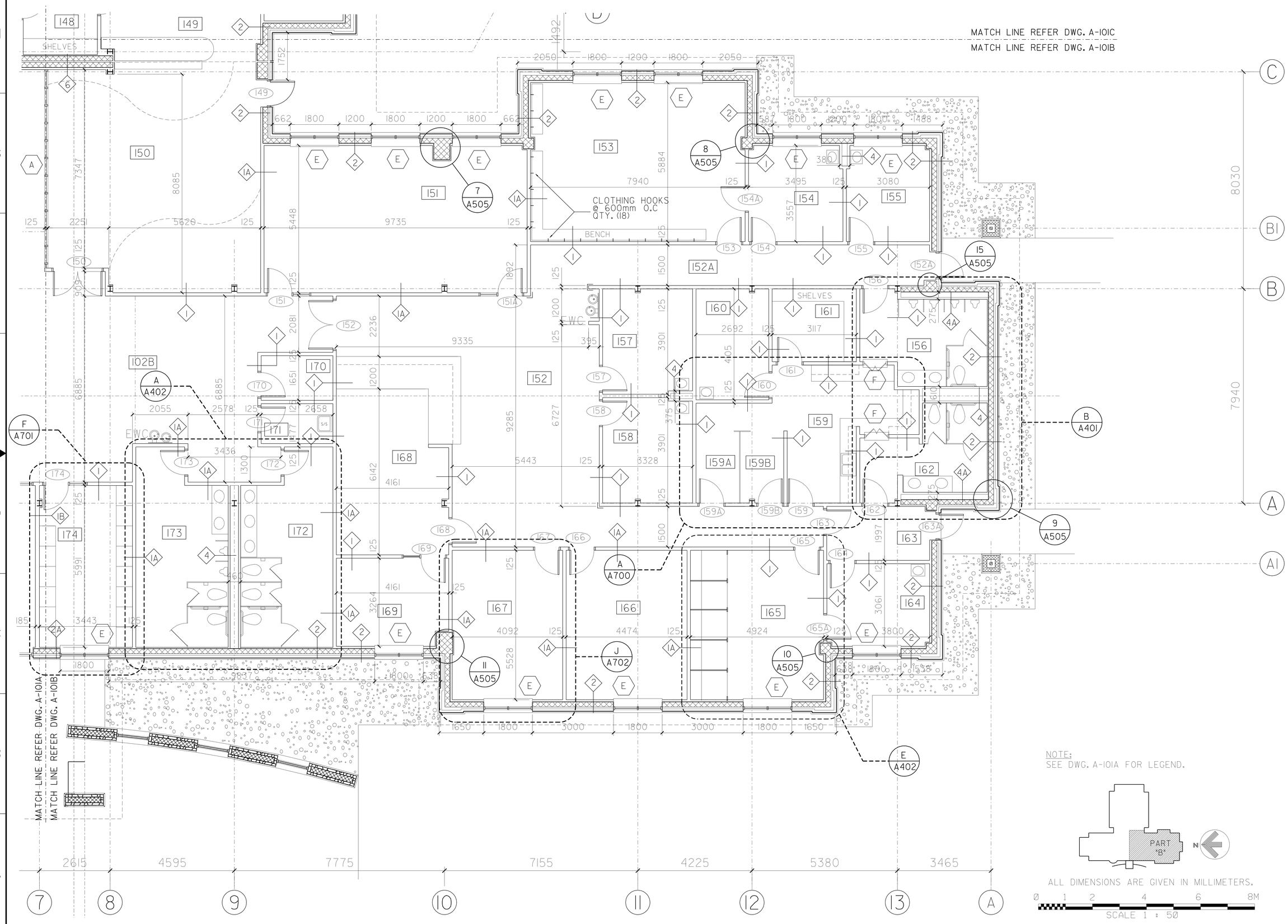

US Army Corps of Engineers
New York District

U.S. ARMY ENGINEER DISTRICT
CORPS OF ENGINEERS
NEW YORK, NEW YORK

PN 59873
MILITARY ENTRANCE PROCESSING STATION (MEPS)
NIAGARA FALLS, NY

FLOOR PLAN PART "B"

Sheet reference number:
A-101B

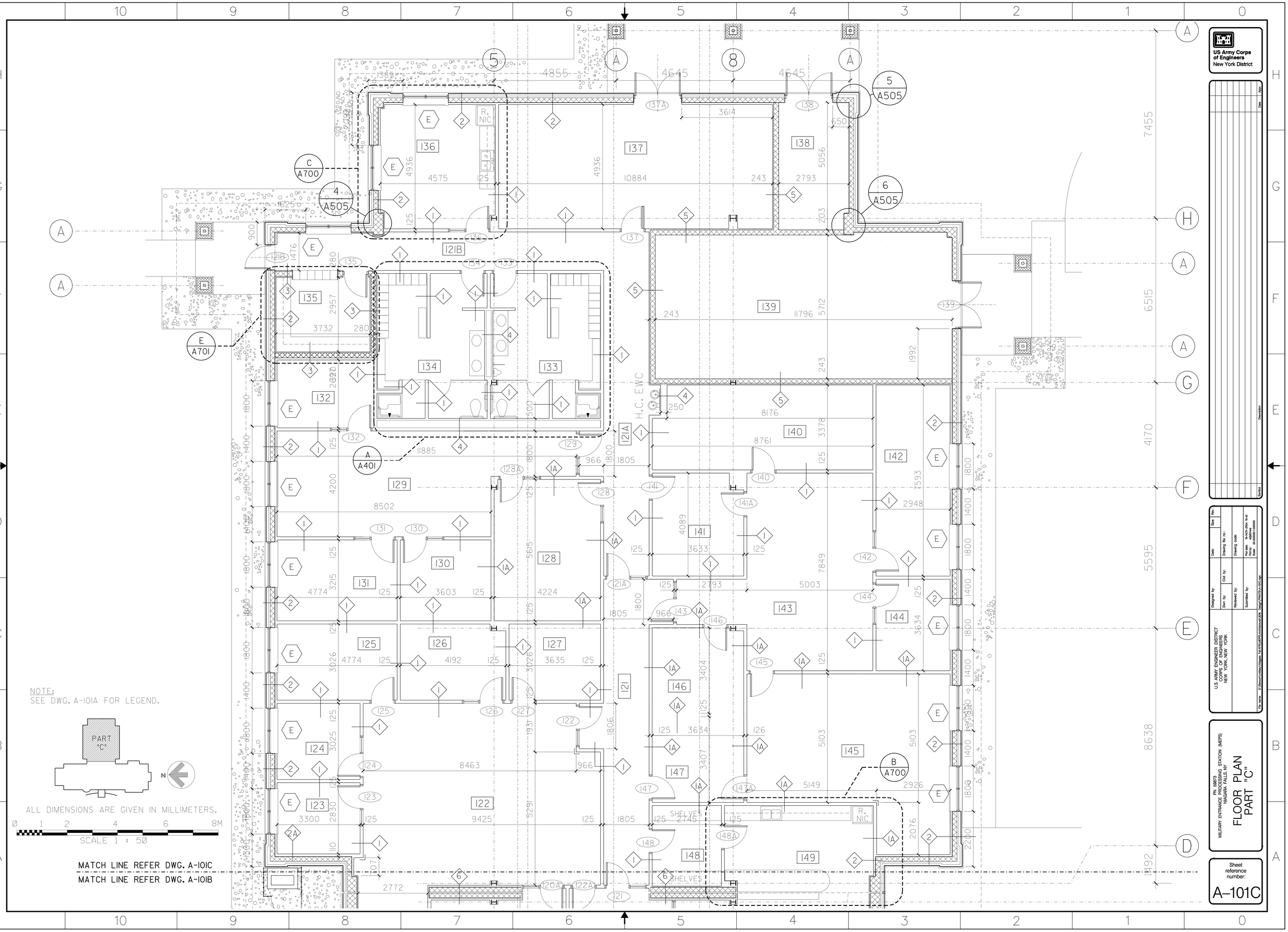

US Army Corps of Engineers
New York District
U.S. ARMY ENGINEER DISTRICT
CORPS OF ENGINEERS
NEW YORK, NEW YORK
PN 56873
MILITARY ENTRANCE PROCESSING STATION (MEPS)
NIAGARA FALLS, NY
FLOOR PLAN
PART "C"
Sheet reference number:
A-101C
NOTE:
SEE DWG. A-101A FOR LEGEND.
PART "C"
ALL DIMENSIONS ARE GIVEN IN MILLIMETERS.
SCALE 1 : 50
MATCH LINE REFER DWG. A-101C
MATCH LINE REFER DWG. A-101B
H.C. EWC
SHELVES
R. NIC

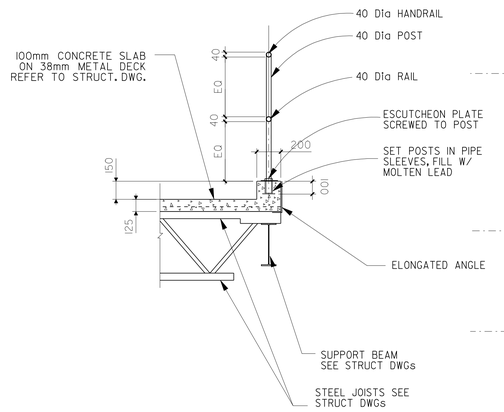

1 ATTIC CEMENT FLOOR AND HANDRAIL DETAIL
SCALE: 1:20

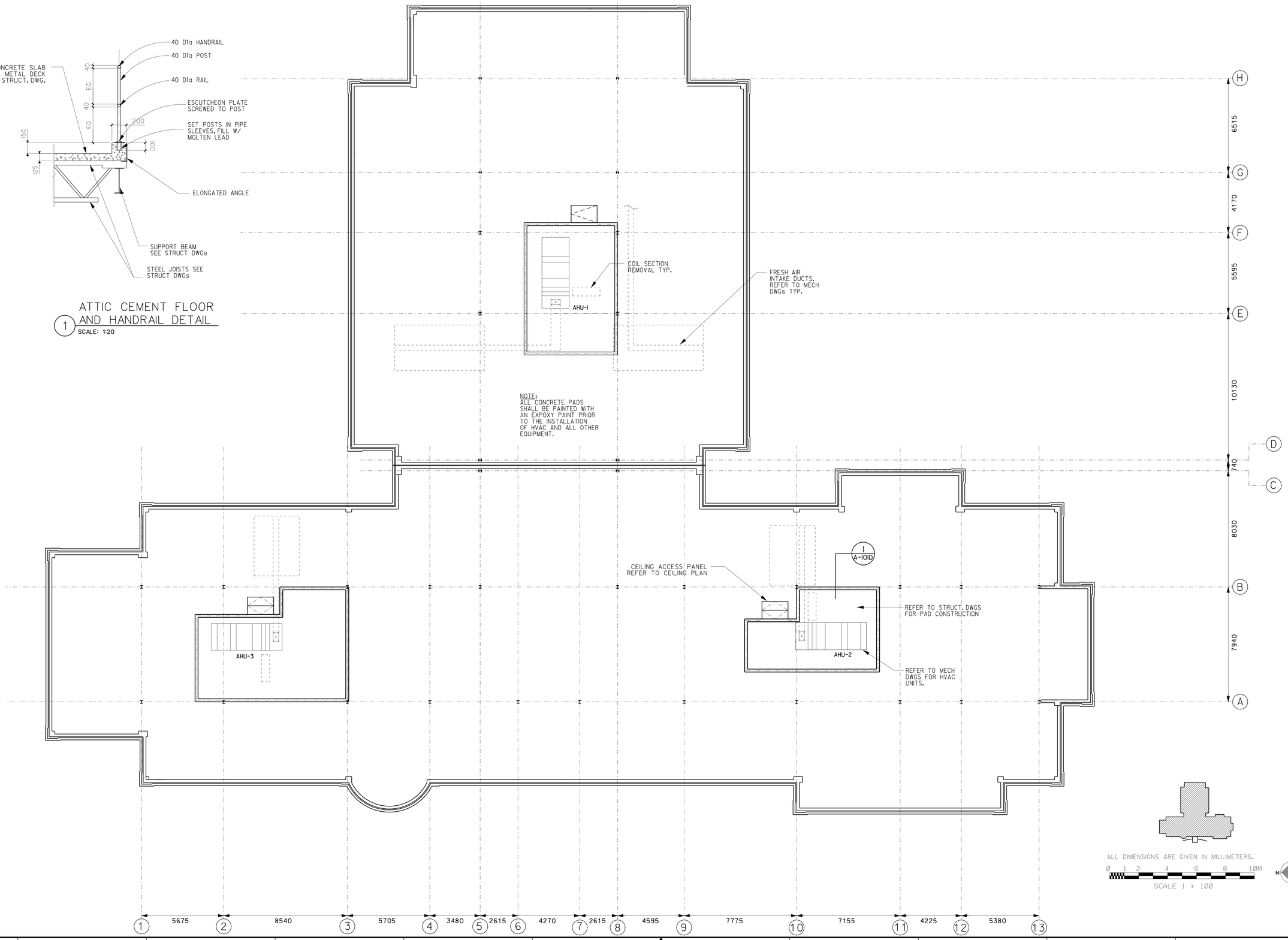

ALL DIMENSIONS ARE GIVEN IN MILLIMETERS.

0 1 2 4 6 8 10M

SCALE 1 : 100

N

US Army Corps of Engineers
New York District

Symbol	Description	Date	Appr.
80% SUBMISSION		10/04/04	
35% SUBMISSION		09/30/04	
15% SUBMISSION		08/30/04	

U.S. ARMY ENGINEER DISTRICT
CORPS OF ENGINEERS
NEW YORK, NEW YORK

Designed by: | Date: | Size: | Rev.:
Dwn by: | Ckd by: | Drawing file no.:
Reviewed by: | Drawing code:
Submitted by: | Plot date: 19-NOV-2004 16:02 | Plot by: u0dbrmw | Scale: 100000000000
File name: S:\Division\Niagara\Niagara Falls\MEPS\Architecture\DWG Design\PRINTS\A-101D.dgn

PN 59873
MILITARY ENTRANCE PROCESSING STATION (MEPS)
NIAGARA FALLS, NY

ATTIC PLAN

Sheet reference number:
A–101D

Submitted by: e3jetmwe
petter-coadmin\Projects Fol AE3MWE\Fsa-architecture\DGs Design\PRINTS\A-101D.dgn
Plot Date: 19-NOV-2004 16:02

LEGEND

- 600mm x 600mm RECESSED LIGHT FIXTURE
- 600mm x 1200mm RECESSED LIGHT FIXTURE
- PENDANT LIGHT FIXTURE
- FLUORESCENT DOWN LIGHT
- PENDANT MOUNTED FLUORESCENT LIGHT
- SUPPLY DIFFUSER
- RETURN REGISTER
- LINEAR DIFFUSER
- 600mm x 600mm ACOUSTICAL CEILING TILE (ACT)
- ACCESS PANEL
- EMERGENCY EXIT LIGHT FIXTURE
- GYPSUM BOARD CEILING
- STC 50 ACOUSTICAL INSULATION BLANKET (REFER TO DWG. A-605)

NOTES

1. FOR ALL ELECTRICAL ITEMS, COORDINATE WITH ELECTRICAL DRAWINGS.
2. FOR ALL MECHANICAL ITEMS, COORDINATE WITH MECHANICAL DRAWINGS.

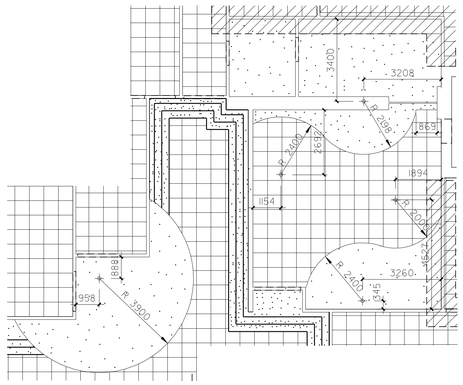

CEILING RADIUS DIMENSIONS

SCALE 1:100

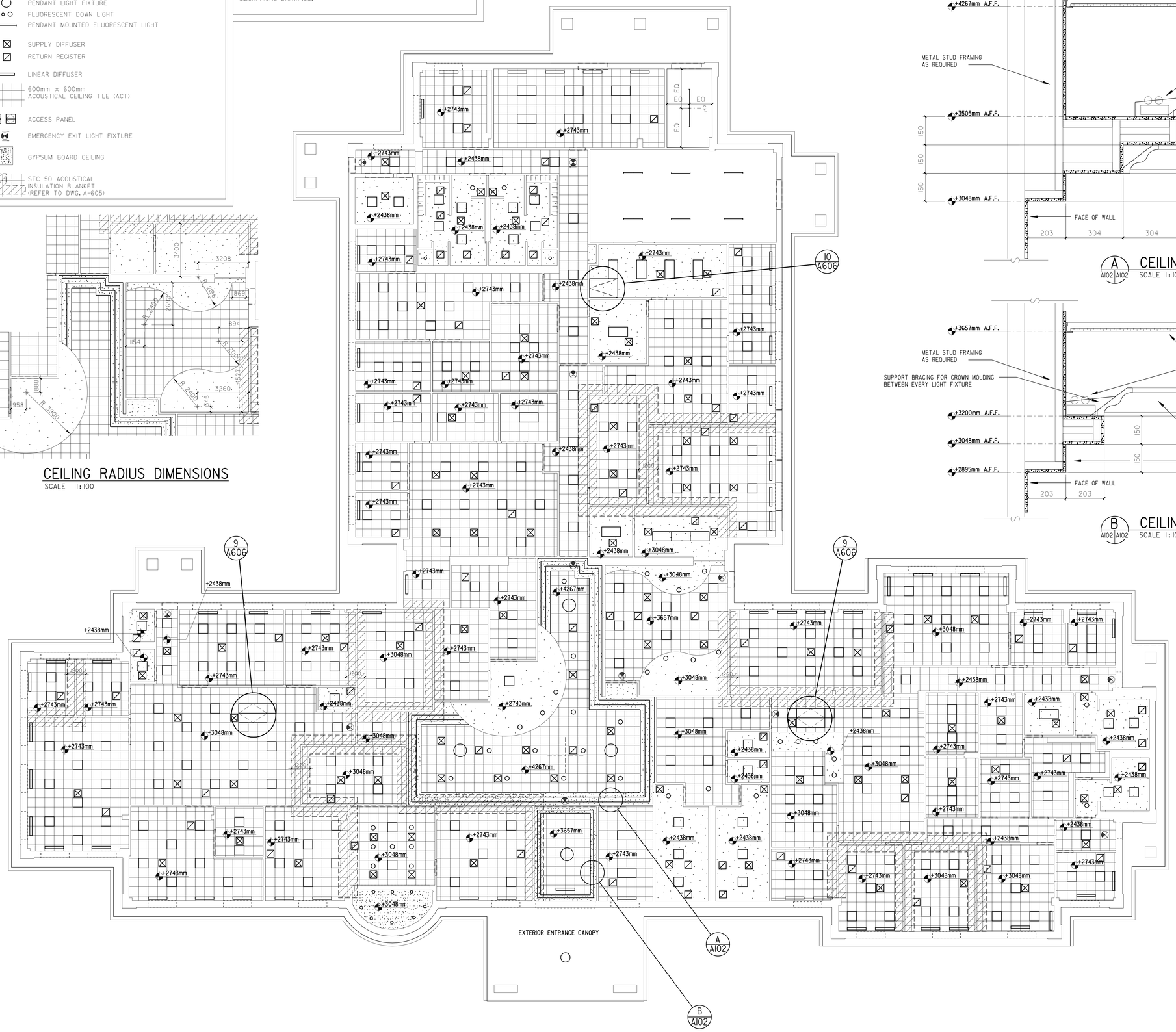

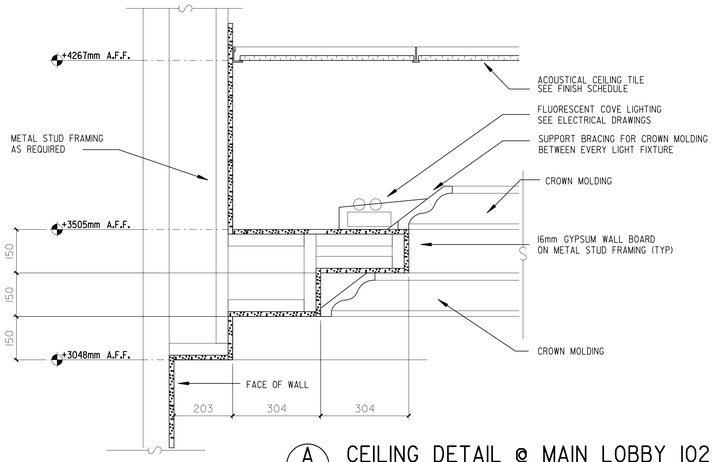

A A102 A102 CEILING DETAIL @ MAIN LOBBY 102

SCALE 1:10

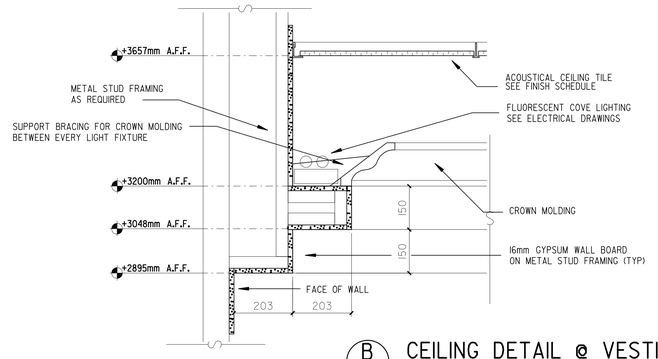

B A102 A102 CEILING DETAIL @ VESTIBULE 101

SCALE 1:10

ALL DIMENSIONS ARE GIVEN IN MILLIMETERS.

0 1 2 4 6 8 10M

SCALE 1 : 100

N

US Army Corps of Engineers
New York District

Symbol	Description	Date	Appr.
90% SUBMISSION		10/04/04	
35% SUBMISSION		08/09/04	
15% SUBMISSION		03/30/04	

U.S. ARMY ENGINEER DISTRICT
CORPS OF ENGINEERS
NEW YORK, NEW YORK

Designed by: | Date: | Size: | Rev:
Dwn by: | Ckd by: | Drawing file no.:
Reviewed by: | Drawing code:
Submitted by: | Plot date: 19-NOV-2004 15:42 | Plot by: ADMINW | Date: 100/000/000000
File name: S:\Mission\military\Niagara Fall\FINI\USER\Architectural\Arch\ Design\INNITS1A-102.dgn

PN 58673
MILITARY ENTRANCE PROCESSING STATION (MEPS)
NIAGARA FALLS, NY

REFLECTED CEILING PLAN

Sheet reference number:
A-102

Plot Date: 19-NOV-2004 15:42
Submitted by: e3jettmee
Saffle:c:\pwworkingdir\pwtemp\ af38meep\archive\arch\ Design\INITS1A-102.dgn

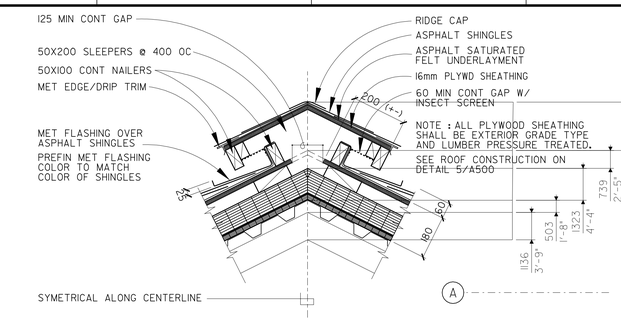

1 TYPICAL RIDGE VENT DETAIL

SCALE 1:10

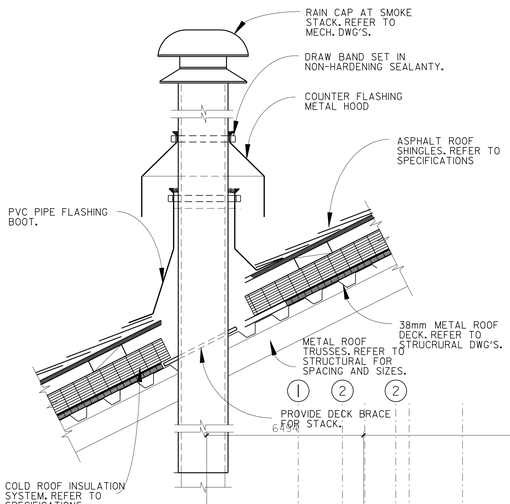

2 TYPICAL BOILER STACK DETAIL

SCALE NONE

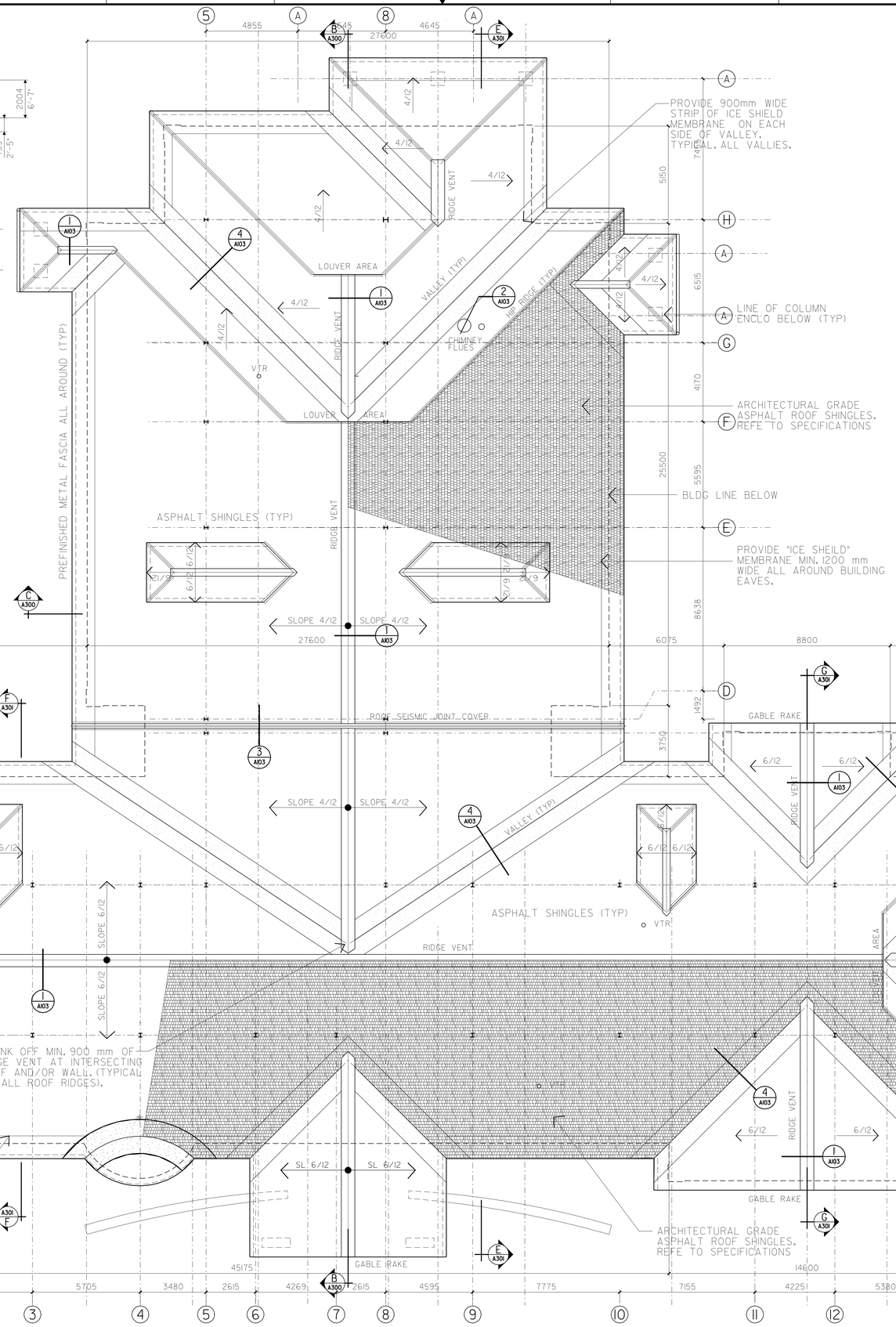

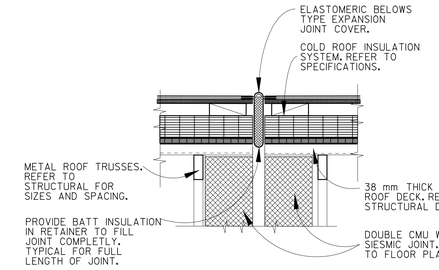

3 TYPICAL ROOF SEISMIC JOINT DETAIL

SCALE 1:10

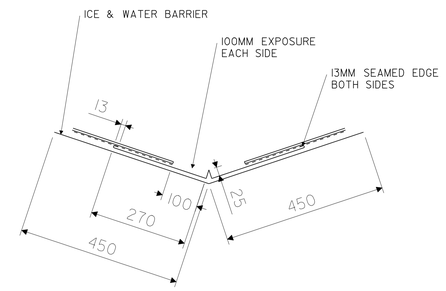

4 TYPICAL VALLEY METAL DETAIL

SCALE: 1:15

NOTES:
ALL EXPOSED EDGES SHALL BE SEAMED.
DO NOT NAIL THROUGH METAL VALLEY.
SEAL SHINGLES W/ ROOFING CEMENT
VALLEY SHALL BE LINED W/ ICE ANDWATER BARRIER PRIOR TO VALLEY METAL INSTALLATION.
USE 1MM ALUMINUM

ALL DIMENSIONS ARE GIVEN IN MILLIMETERS.

SCALE 1 : 100

US Army Corps of Engineers
New York District

Symbol	Description	Date	Appr.
90% SUBMISSION		10/04/04	
95% SUBMISSION		09/30/04	
35% SUBMISSION		03/30/04	

Designed by: | Date: | Size: | Rev:
Dwn by: | Ckd by: | Drawing file no:
Reviewed by: | Drawing code:
Submitted by: | Plot date: 19-NOV-2004 15:42 | Plot by: eJohnson | File: 100500000000
File name: S:\Devon\Niagara Fall AFS\MFS\Architectural\DWG Design\PN15873-A-103.dgn

U.S. ARMY ENGINEER DISTRICT
CORPS OF ENGINEERS
NEW YORK, NEW YORK

PN 15873
MILITARY ENTRANCE PROCESSING STATION (MEPS)
NIAGARA FALLS, NY

ROOF PLAN

Sheet reference number:
A-103

Submitted by: e3johnwe
pwtinrdcadmin1\projects\niagara fall AFS\MEPS\architectural\DWG Design\PN15873-A-103.dgn
Plot Date: 19-NOV-2004 15:42

NOTE:

1. PPT-2 AND PPT-3 TILE AT FOOD PREP AREA 149 SHALL HAVE A CLEAR SLIP RESISTANT FINISH.

2. PPT-1, PPT-2, AND PPT-3 TILE AT APPLICANT DINING 150 SHALL HAVE A FINISH TO MATCH PPT TILE AT LOBBY AREA.

A FOOD PREP AREA 149
SCALE : 1100

NOTE:

ALL PPT TILE WITHIN VESTIBULE 101 AND BOUNDARY OF DOTTED LINE IN LOBBY 102 SHALL HAVE A CLEAR SLIP RESISTANT FINISH. (TYP.)

B VESTIBULE 101
SCALE : 1100

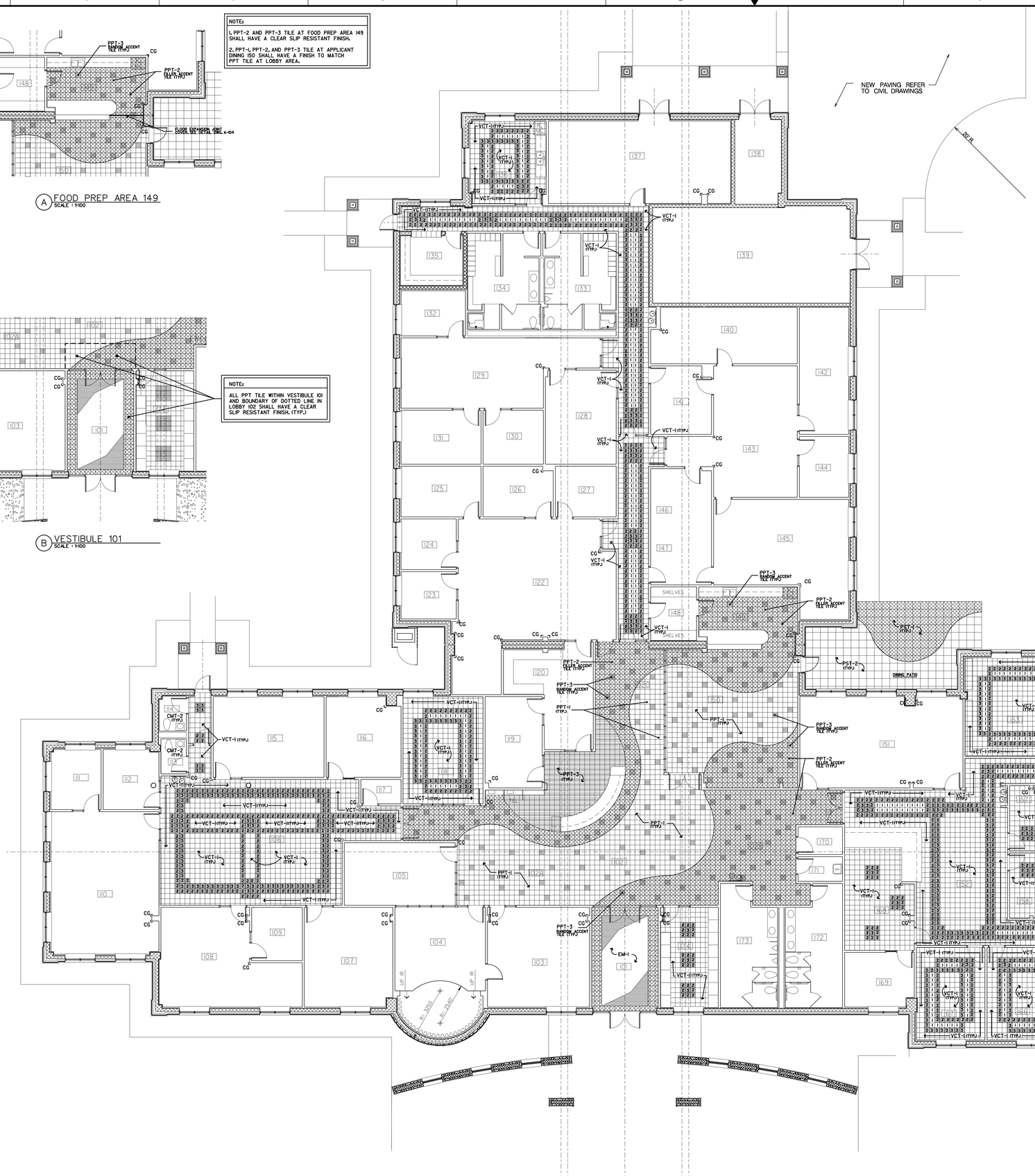

FLOOR TILE LEGEND

PPT-1	VCT-1
PPT-2	VCT-2
PPT-3	VCT-3
CG-1	

PPT- PORCELAIN PAVER TILE
VCT- VINYL COMPOSITION TILE
CG- CORNER GUARD
PST- PORCELAIN STONE TILE

NOTES:

1. SEE FINISH SCHEDULE ON DRAWING A-600 FOR MORE DETAILS ON FLOOR FINISHES.

2. INSTALL METAL TRANSITION STRIP AT PPT AND VCT TRANSITIONS TYPICAL OF ALL LOCATIONS.

3. INSTALL MARBLE SADDLE AT PPT AND CMT TRANSITIONS TYPICAL OF ALL LOCATIONS.

4. SEE DRAWING A-105 FOR FLOOR AND WALL TILE PATTERNS AT LOCKER ROOMS AND PUBLIC RESTROOMS.

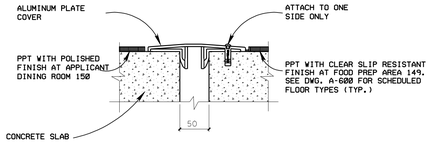

1 FLOOR EXP. JOINT DETAIL
SCALE : NONE

ALL DIMENSIONS ARE GIVEN IN MILLIMETERS.

0 1 2 4 6 8 10M

SCALE 1 : 100

US Army Corps of Engineers
New York District

Date	Description
10/04/04	90% SUBMISSION
09/04/04	35% SUBMISSION
07/30/04	15% SUBMISSION

Designed by: | Date: | Size: | Rev:
Dwn by: | Ckd by: | Drawing file no.: | Drawing code:
Reviewed by: | Plot date: 19-NOV-2004 15:42 | Plot by: eJ8hmee | Size: 1000x700000
Submitted by: | File name: S:\Denver\Military\Niagara Fall AFS\MPS\Architectural\DWG Design\PRINTS\A-104.dgn

U.S. ARMY ENGINEER DISTRICT
CORPS OF ENGINEERS
NEW YORK, NEW YORK

PN 58873
MILITARY ENTRANCE PROCESSING STATION (MEPS)
NIAGARA FALLS, NY

FLOOR TILE PATTERN

Sheet reference number:
A-104

Submitted by: e3hmee
Sorted-assembler:pkhiggins Fail AFBMEPS\Sae\architecture\DWG Design\PRINTS\A-104.dgn
Plot Date: 19-NOV-2004 15:42

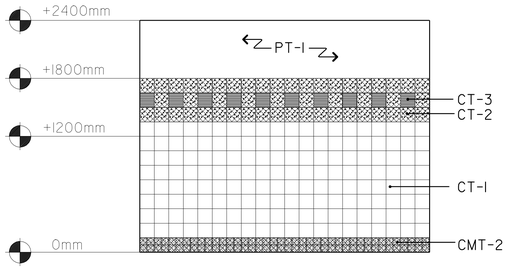

WALL TILE PATTERN @
ROOMS 113, 114, 133, 134, 156, 162, 172, & 173
(A) SCALE: 1:20

NOTE:
WALL TILE PATTERN SHALL BE CONTINUOUS FROM WALL TO WALL.

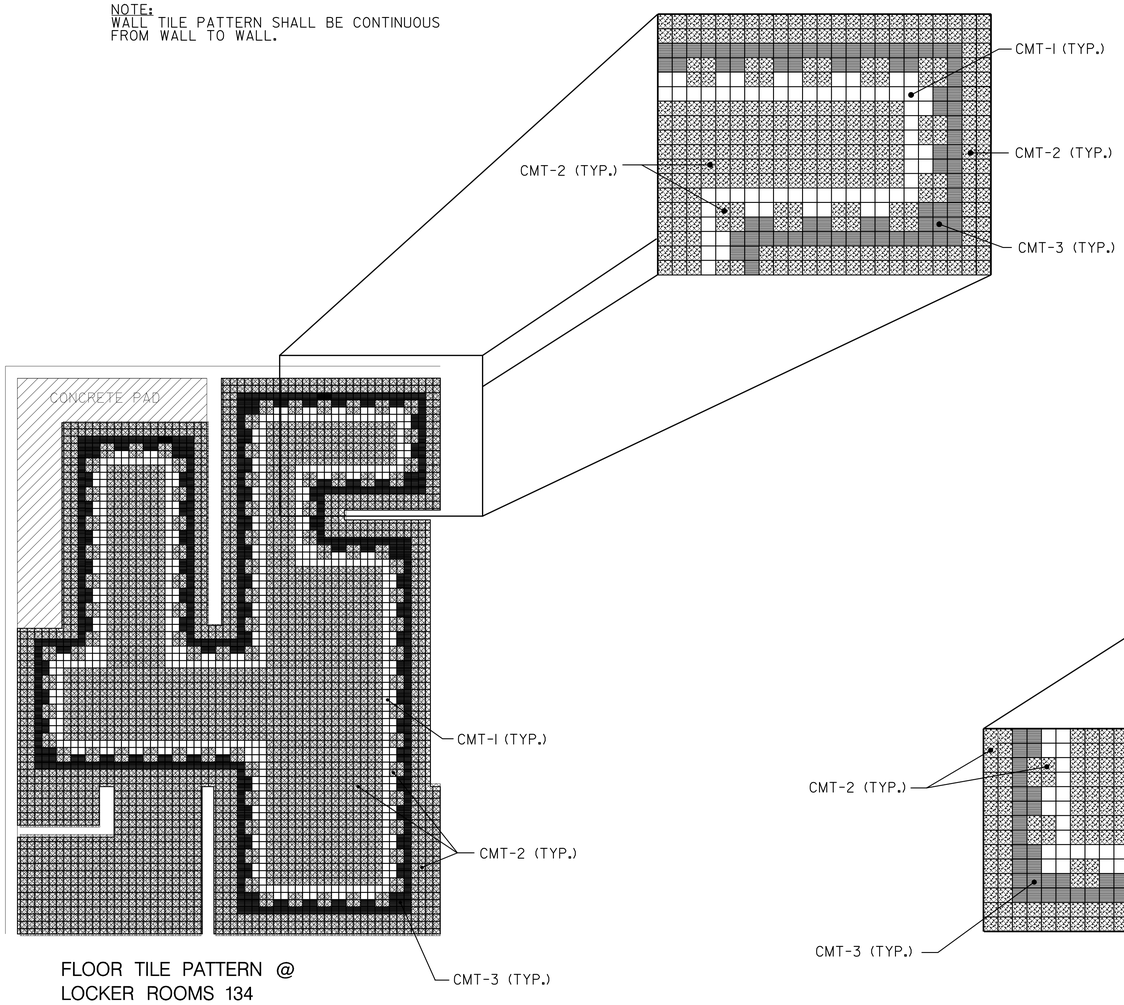

FLOOR TILE PATTERN @
LOCKER ROOMS 134
(LOCKER RM. 133 SIM. OPP. HAND)
(B) SCALE: 1:50

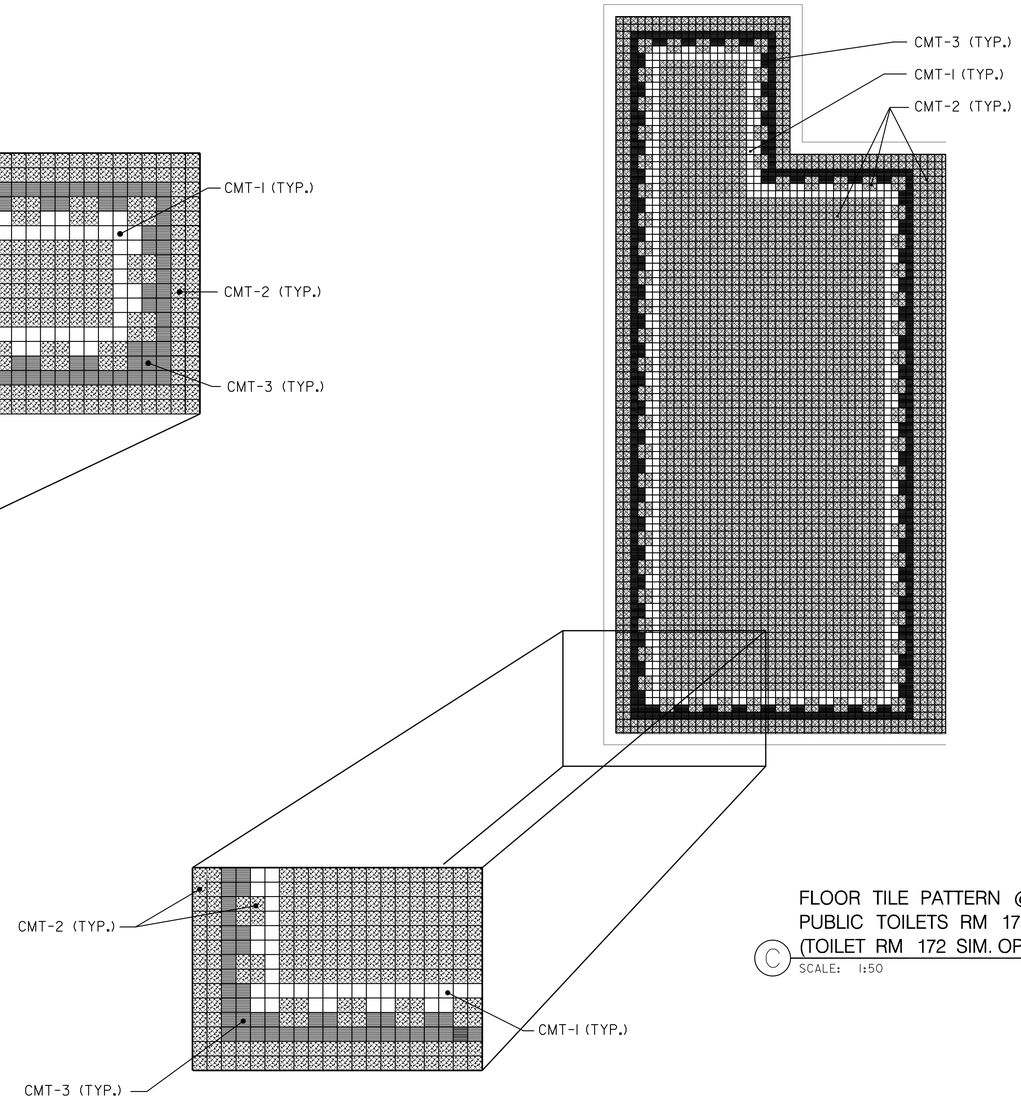

FLOOR TILE PATTERN @
PUBLIC TOILETS RM 173
(TOILET RM 172 SIM. OPP. HAND)
(C) SCALE: 1:50

US Army Corps of Engineers
New York District

Rev.	Date	Description	Appr.

U.S. ARMY ENGINEER DISTRICT
CORPS OF ENGINEERS
NEW YORK, NEW YORK

Designed by: | Date: | Size: | Rev.:
Dwn by: | Ckd by: | Drawing file no.:
Reviewed by: | Drawing code:
Submitted by: | Pltd date: 19-NOV-2004 15:43 | Plot by: o3jetmxw | Scale: 0.000000000000

File name: S:\divisions\military\niagara_fall\MEPS\architectural\DWG_Design\PRINTED\A-105.dgn

PN 59873
MILITARY ENTRANCE PROCESSING STATION (MEPS)
NIAGARA FALLS, NY

ENLARGED TILE PATTERN

Sheet reference number:
A–105

Submitted by: o3jetmxw
petter-coatesblue:pmkiger & Fol AE@MEPS&architecture&DGs Designprints\S&A-105.dgn Plot Date: 19-NOV-2004 15:43

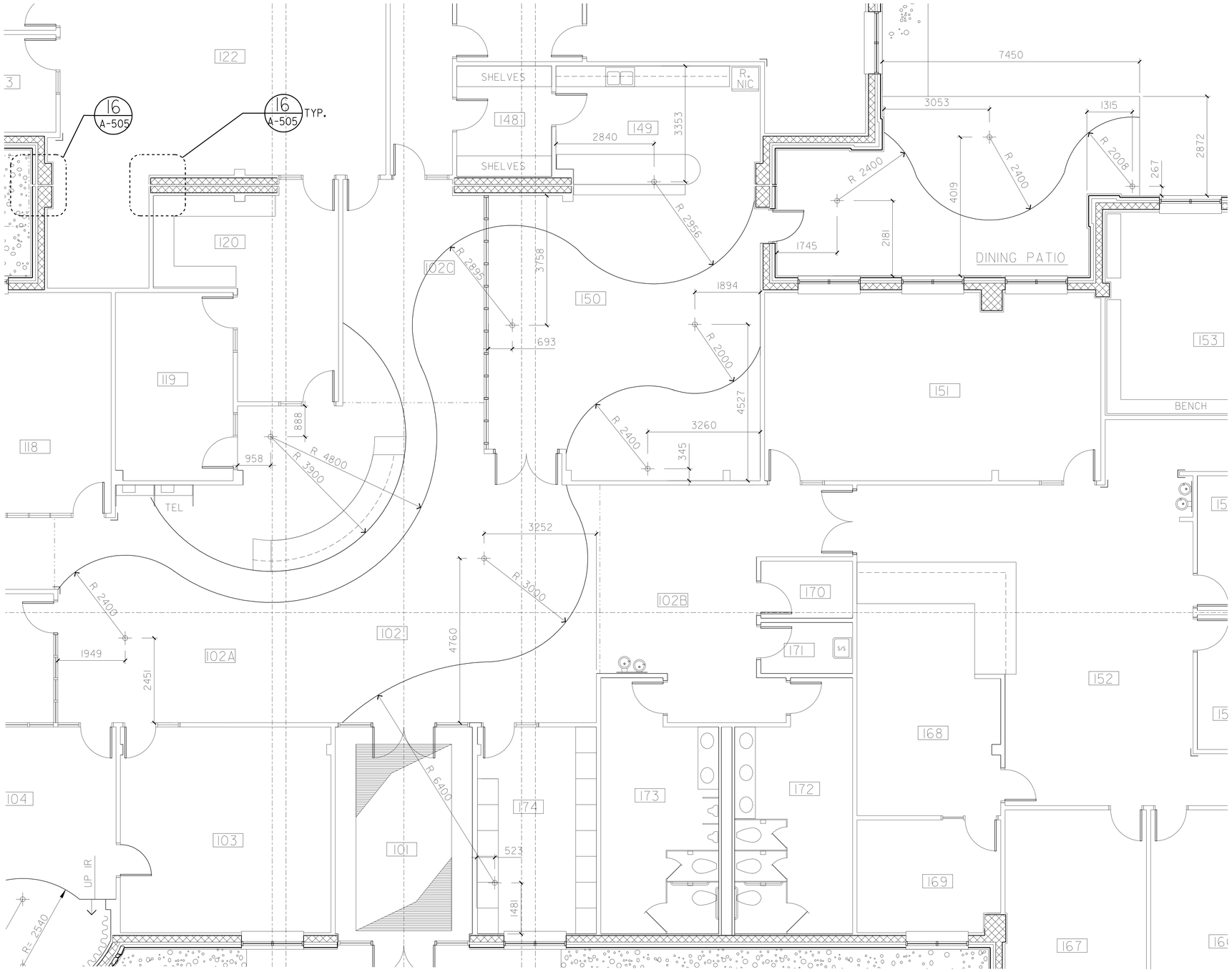

FLOOR TILE RADIUS DIMENSION PLAN

SCALE: 1:50

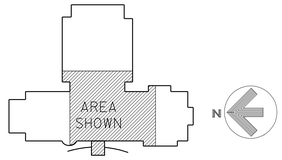

ALL DIMENSIONS ARE GIVEN IN MILLIMETERS.

0 1 2 4 6 8M

SCALE 1 : 50

US Army Corps of Engineers
New York District

U.S. ARMY ENGINEER DISTRICT
CORPS OF ENGINEERS
NEW YORK, NEW YORK

PN 58673
MILITARY ENTRANCE PROCESSING STATION (MEPS)
NIAGARA FALLS, NY

FLOOR TILE RADIUS DIMENSION PLAN

Sheet reference number:
A–106

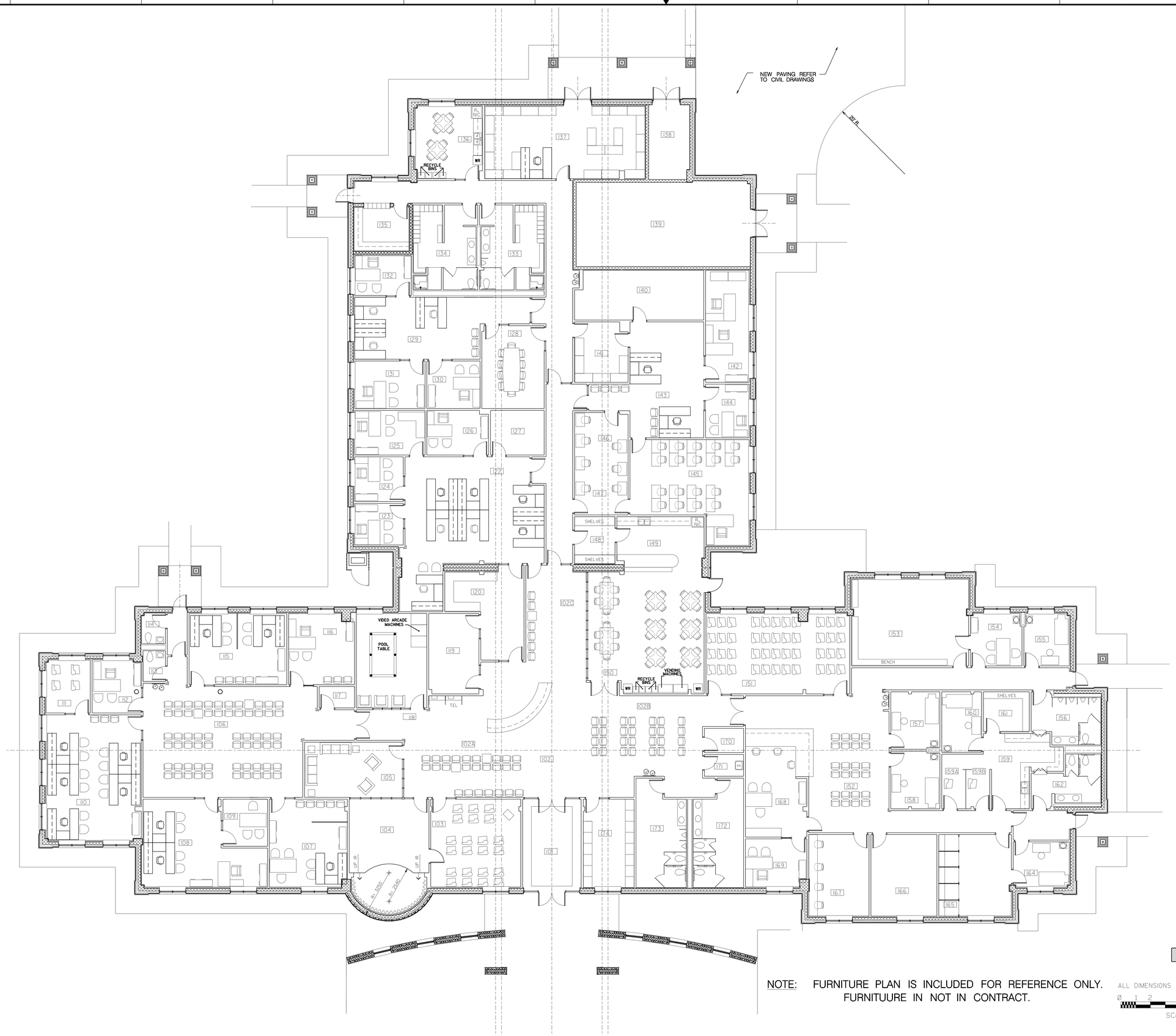

NOTE: FURNITURE PLAN IS INCLUDED FOR REFERENCE ONLY.
FURNITUURE IN NOT IN CONTRACT.

ALL DIMENSIONS ARE GIVEN IN MILLIMETERS.

0 1 2 4 6 8 10M

SCALE 1 : 100

US Army Corps of Engineers
New York District

Symbol	Description	Date	Appr.
	90% SUBMISSION	10/04/04	
	30% SUBMISSION	06/07/04	
	15% SUBMISSION	03/05/04	

U.S. ARMY ENGINEER DISTRICT
CORPS OF ENGINEERS
NEW YORK, NEW YORK

Designed by: | Date: | Size: | Rev.:
Dwn by: | Ckd by: | Drawing file no.:
Reviewed by: | Drawing code:
Submitted by: | Plot date: 19-NOV-2004 15:45 | Plot by: eJetmwe | Scale: 100.000000:1.000000

File name: S:\Mason\military\Niagara Fall AFB\MEPS\Architectural\30% Design\PRINTS\A-107.dgn

PN 56873
MILITARY ENTRANCE PROCESSING STATION (MEPS)
NIAGARA FALLS, NY

FURNITURE PLAN

Sheet reference number:
A–107

Submitted by: e3jetmwe
Plot Date: 19-NOV-2004 15:45
S:\Mason\military\Niagara Fall AFB\MEPS\Architectural\30% Design\PRINTS\A-107.dgn

NOTES:

1. FOR ELEVATION MATERIAL LIST REFER TO DRAWING A-201.
2. LOUVER TYPE INDICATOR REFER TO DWG. A-604 (TYP.)

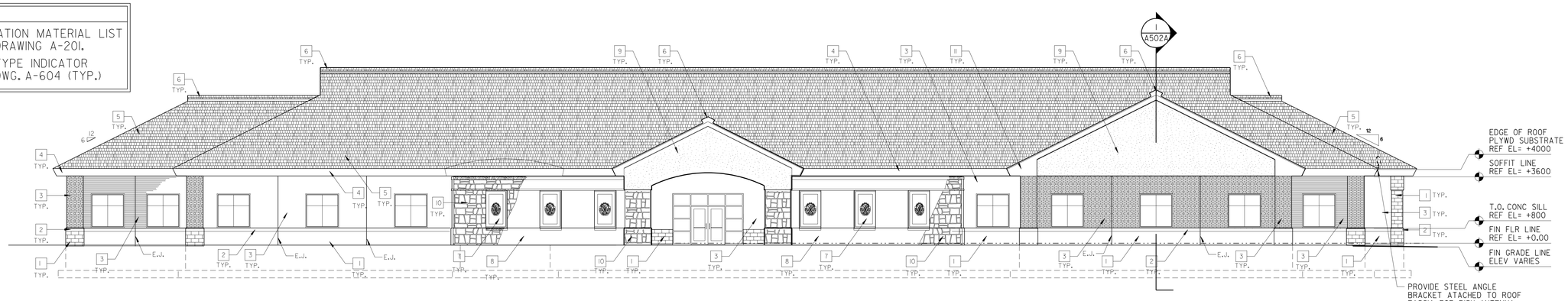

1 WEST ELEVATION
SCALE: 1:100

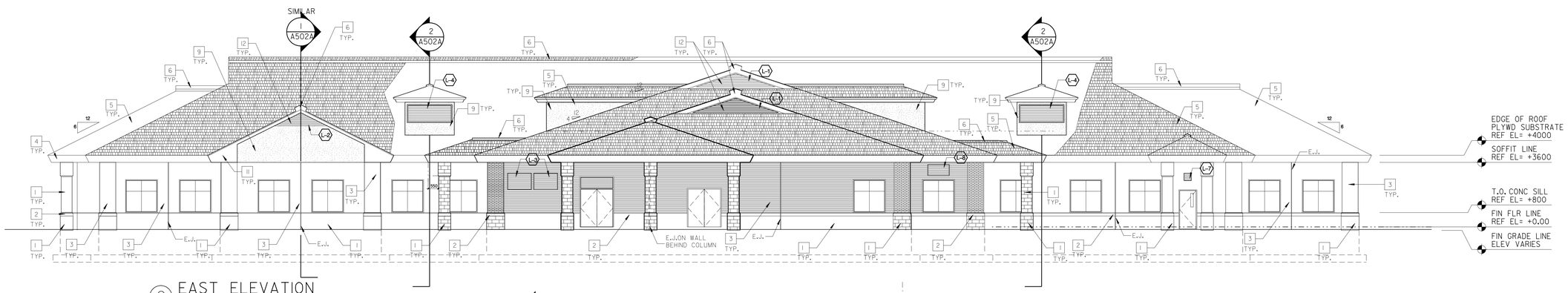

2 EAST ELEVATION
SCALE: 1:100

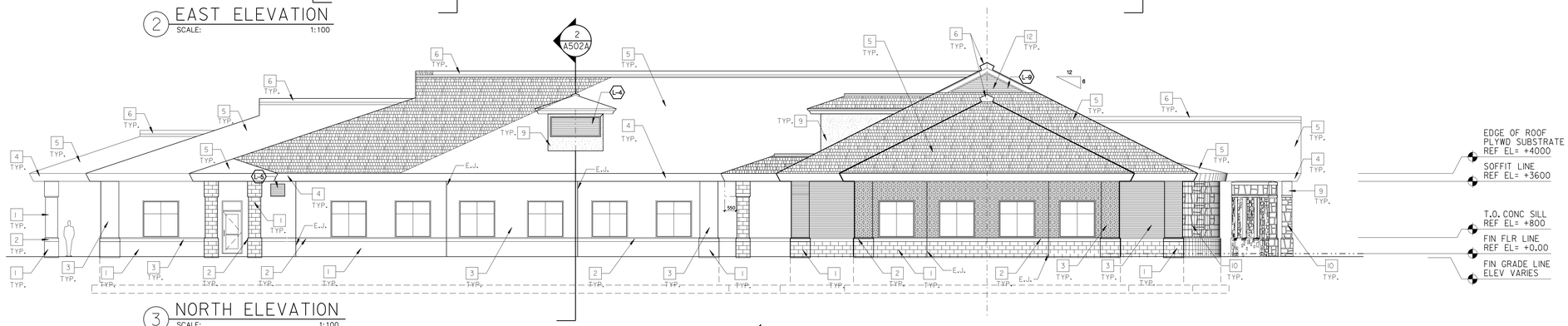

3 NORTH ELEVATION
SCALE: 1:100

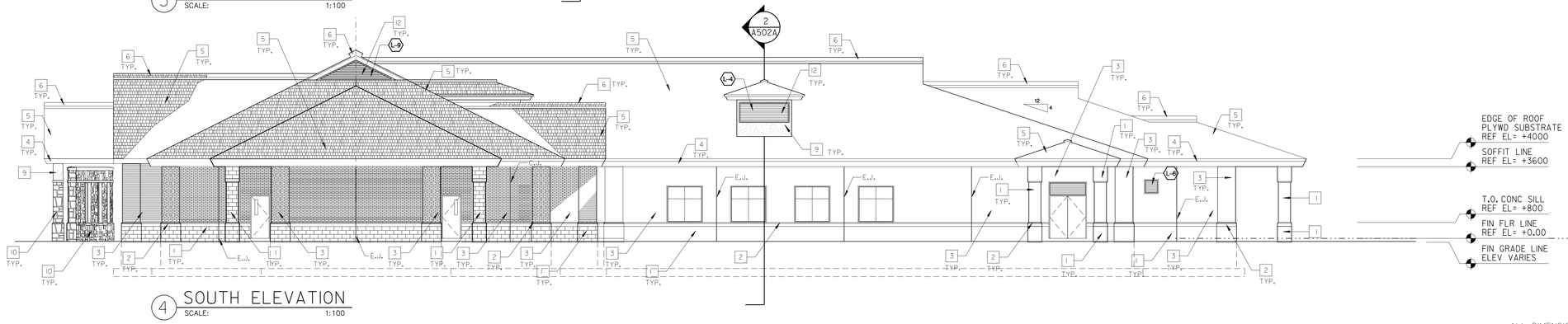

4 SOUTH ELEVATION
SCALE: 1:100

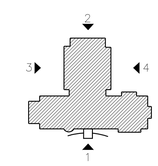

KEY PLAN
SCALE: NONE

ALL DIMENSIONS ARE GIVEN IN MILLIMETERS.
0 1 2 4 6 8 10M
SCALE 1 : 100

US Army Corps of Engineers
New York District

Symbol	Description	Date	Appr.
90% SUBMISSION		10/04/04	
90% SUBMISSION		10/04/04	
65% SUBMISSION		09/09/04	

U.S. ARMY ENGINEER DISTRICT
CORPS OF ENGINEERS
NEW YORK, NEW YORK

Designed by: | Date: | Size: | Rev.:
Dwn by: | Ckd by: | Drawing file no.:
Reviewed by: | Drawing code:
Submitted by: | Plot date: 19-NOV-2004 15:45 | Plot by: eJetmee | Scale: 0.000000x0.000000
File name: G:\Mercon\Military\Niagara Falls\ARMS\Architectural\DN_Design\Plans\A-200.dgn

PN 56973
MILITARY ENTRANCE PROCESSING STATION (MEPS)
NIAGARA FALLS, NY

BUILDING ELEVATIONS

Sheet reference number:
A-200

Submitted by: eJetmee
pattern:contentlibrary\Mercon\Pattern\Mercon\Pattern\Plots Design\PRINTS\A-200.dgn
Plot Date: 19-NOV-2004 15:45

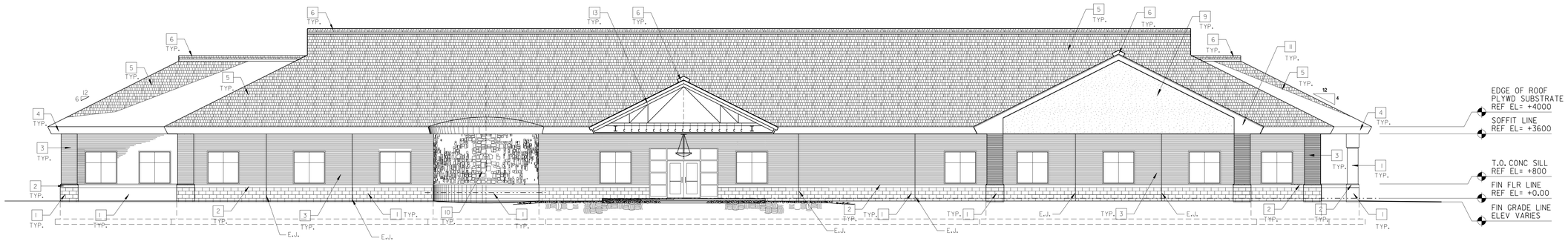

1 WEST ELEVATION
SCALE: 1:100

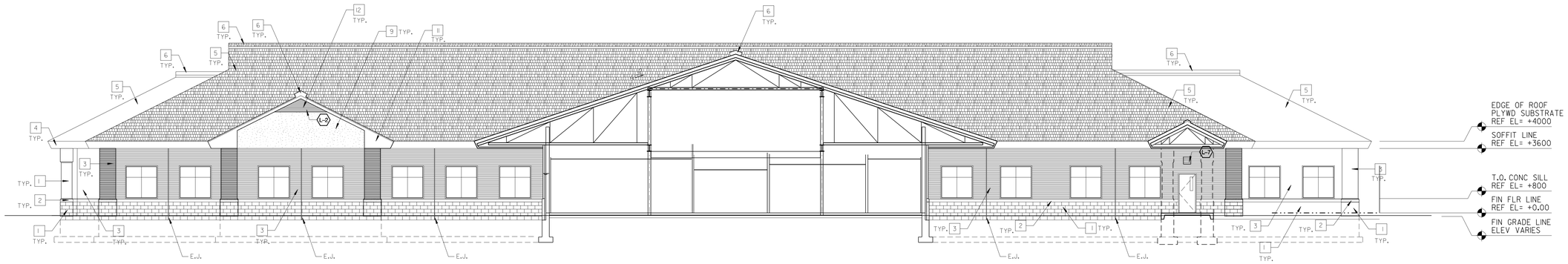

2 EAST ELEVATION
SCALE: 1:100

MATERIALS LIST

1. *SPLIT FACE CMU*
2. *CAST STONE TRIM*
3. *FACE BRICK*
   MANUFACTURER: CUNNINGHAM BRICK CO.
   COLOR: WINESTONE VELOUR
4. *ALUMINUM CLAD FASCIA*
5. *COMPOSITION SHINGLES*
6. *VENTED RIDGE CAP*
7. *ARMED SERVICES PANEL*
8. *CURVED WALL*
9. *EIFS*
   MANUFACTURER: DRYVIT
   SANDBLAST DPR
   COLOR: TO MATCH STONE VENEER
10. *STONE VENEER*
    MANUFACTURER: ARRISCRAFT INTERNATIONAL
    COLLECTION: CITADEL
    COLOR: DESERT BROWN
11. *SOFFIT*
12. *METAL LOUVER*
13. *FRONT ENTRANCE CANOPY*

NOTES

COLORS AND MANUFACTURERS INDICATED ON LIST OF MATERIALS ARE FOR REFERENCE ONLY AND ARE NOT INTENDED TO LIMIT SELECTION OF MANUFACTURERS.

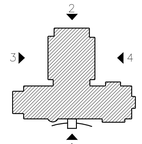

KEY PLAN
SCALE: NONE

ALL DIMENSIONS ARE GIVEN IN MILLIMETERS.
0 1 2 4 6 8 10M
SCALE 1 : 100

US Army Corps of Engineers
New York District

Symbol	Description	Date	Appr.
90% SUBMISSION		10/04/04	
80% SUBMISSION		09/07/04	
65% SUBMISSION		06/08/04	

U.S. ARMY ENGINEER DISTRICT
CORPS OF ENGINEERS
NEW YORK, NEW YORK

Designed by:
Dwn by:
Ckd by:
Reviewed by:
Submitted by:
Date:
Size:
Rev:
Drawing file no.:
Drawing code:
Plot date: 19-NOV-2004 15:48
Plot by: eddsimme
Plot file: 100_0000000000000
File name: S:\Benson\military\Niagara_Falls\FBI\MEPS\Architectural\90%_Design\PRINTS\A-201.dgn

PN 58973
MILITARY ENTRANCE PROCESSING STATION (MEPS)
NIAGARA FALLS, NY

BUILDING ELEVATIONS

Sheet reference number:
A–201

Submitted by: eijlmewe
Plot Date: 19-NOV-2004 15:48
S:\Other-Government\Niagara Falls AFB\MEPS\Architectural\90% Design\PRINTS\A-201.dgn

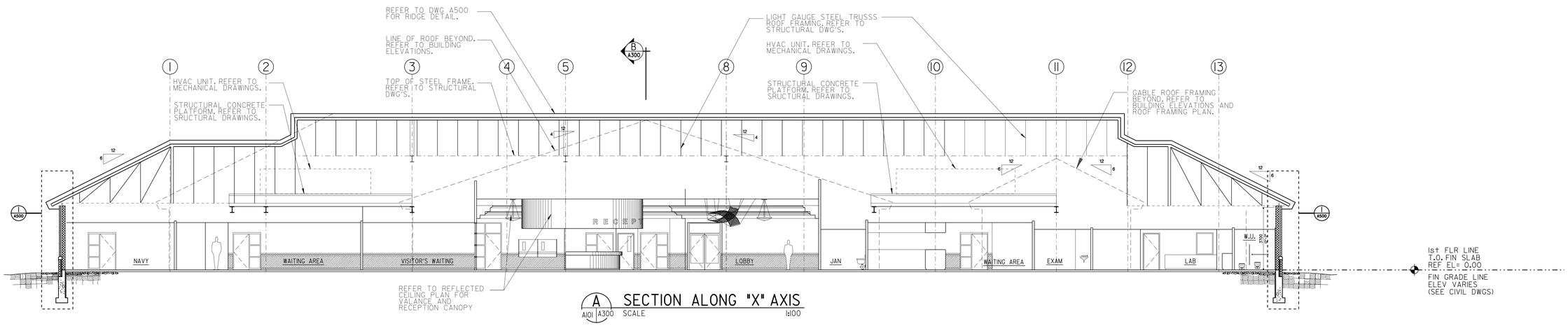

A SECTION ALONG "X" AXIS
A101 A300 SCALE 1:100

NOTE:
ACCENT CANOPIES ARE AN OPTIONAL ITEM. COLOR SELECTION AND LOCATION SHALL BE DETERMINED BY ARCHITECT.

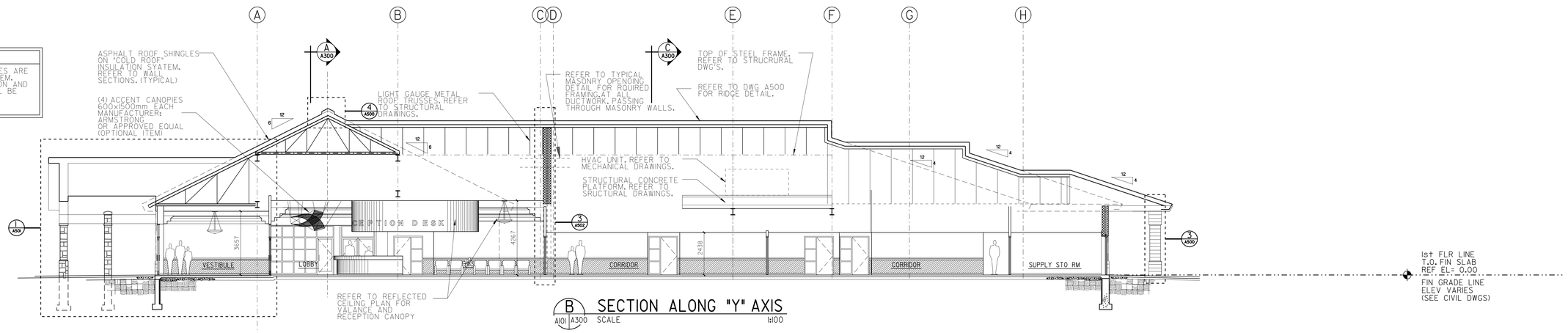

B SECTION ALONG "Y" AXIS
A101 A300 SCALE 1:100

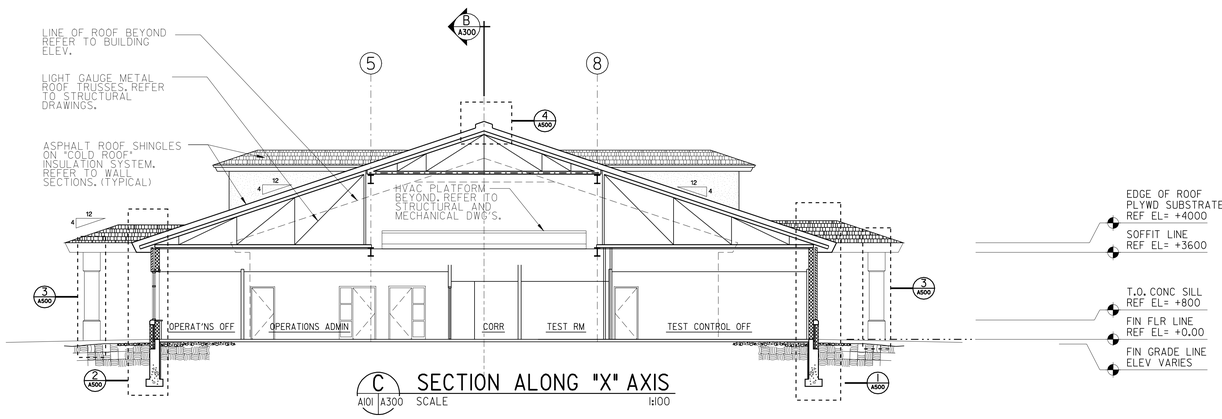

C SECTION ALONG "X" AXIS
A101 A300 SCALE 1:100

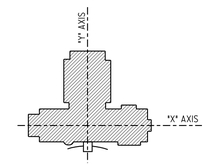

KEY PLAN
SCALE: NONE

ALL DIMENSIONS ARE GIVEN IN MILLIMETERS.
0 1 2 4 6 8 10M
SCALE 1 : 100

US Army Corps of Engineers
New York District

Symbol	Description	Date	Rev.
90%	SUBMISSION	10/04/04	
35%	SUBMISSION	09/09/04	
15%	SUBMISSION	06/08/04	

U.S. ARMY ENGINEER DISTRICT
CORPS OF ENGINEERS
NEW YORK, NEW YORK

Designed by: | Date: | Size: | Rev:
Dwn by: | Ckd by: | Drawing file no.:
Reviewed by: | Drawing code:
Submitted by: | Plot date: 19-NOV-2004 15:46 | Plot by: eJ8hmw | File: 03100000000
File name: S:\Denver\Military\Niagara Fall AFB\MEPS\Architectural\DWG Design\PRINTS\A-300.dgn

PN 58873
MILITARY ENTRANCE PROCESSING STATION (MEPS)
NIAGARA FALLS, NY

BUILDING SECTIONS

Sheet reference number:
A–300

Submitted by: eJ8hmw
Plot Date: 19-NOV-2004 15:46
Plot Scale: 1:1 Plot Device: AEPMAGTS54x42HiQuality
Design: PRINTS\A-300.dgn

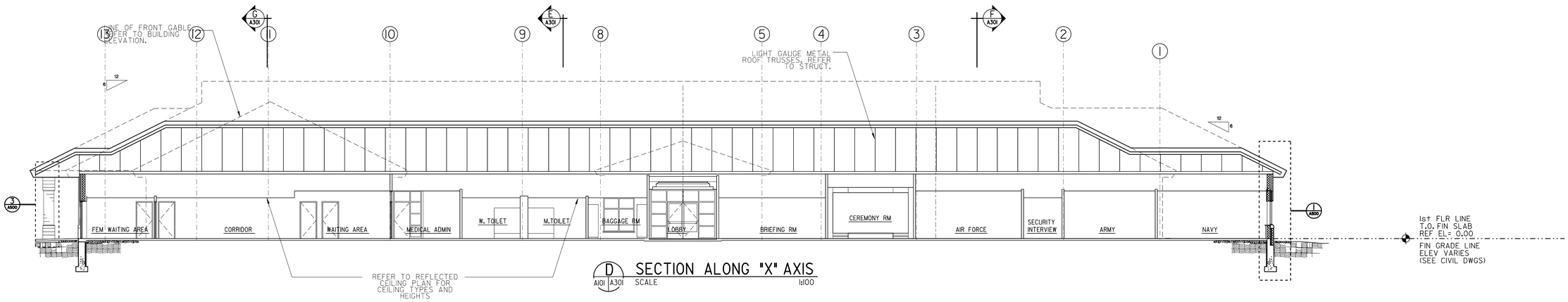

D A101 A301 SECTION ALONG "X" AXIS
SCALE 1:100

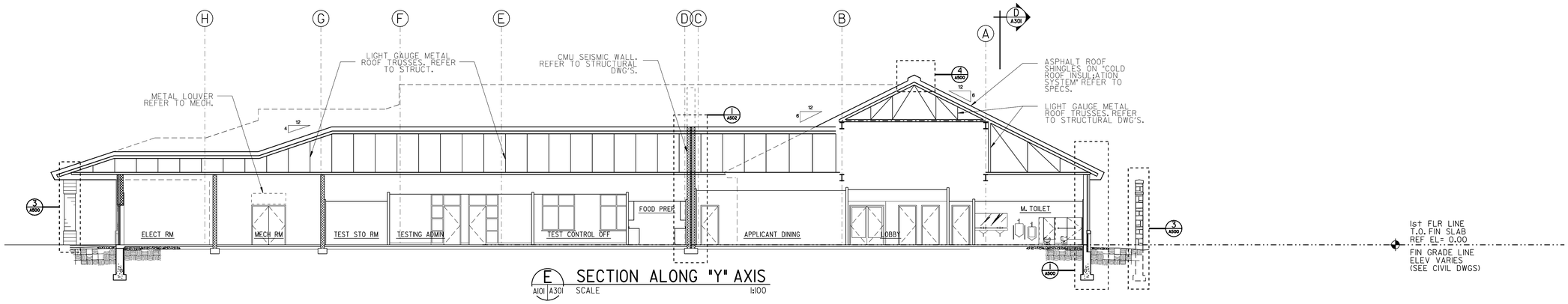

E A101 A301 SECTION ALONG "Y" AXIS
SCALE 1:100

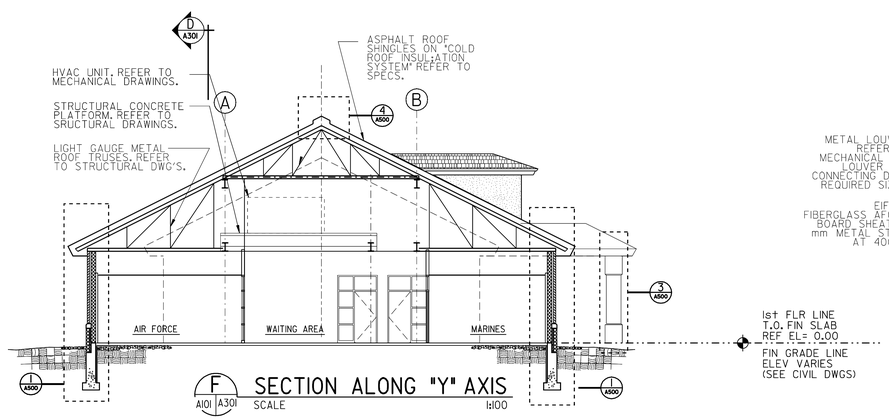

F A101 A301 SECTION ALONG "Y" AXIS
SCALE 1:100

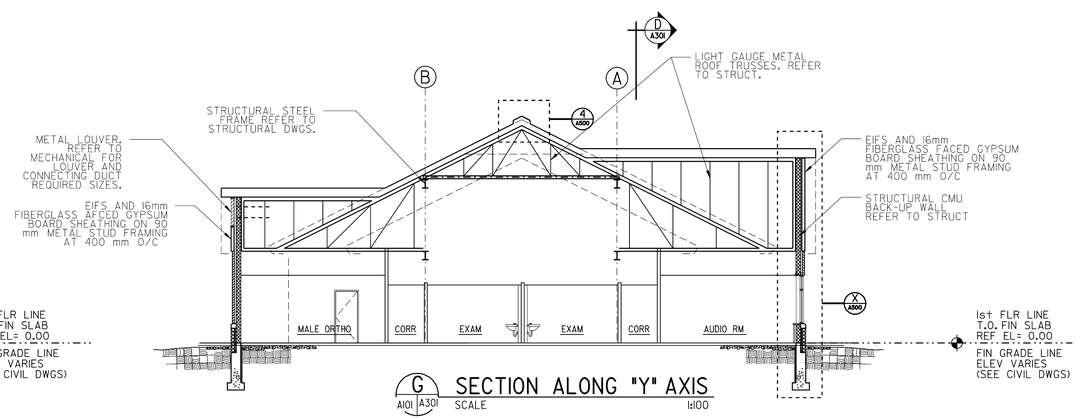

G A101 A301 SECTION ALONG "Y" AXIS
SCALE 1:100

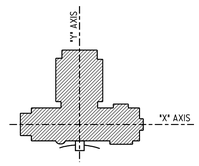

KEY PLAN
SCALE: NONE

ALL DIMENSIONS ARE GIVEN IN MILLIMETERS.

2 4 6 8 10M

SCALE 1 : 100

N

US Army Corps of Engineers
New York District

Symbol	Description	Date	Appr.
90%	SUBMISSION	10/04/04	
60%	SUBMISSION	08/09/04	
35%	SUBMISSION	05/05/04	

U.S. ARMY ENGINEER DISTRICT
CORPS OF ENGINEERS
NEW YORK, NEW YORK

Designed by: | Date: | Size: | Rev.:
Dwn by: | Ckd by: | Drawing file no.:
Reviewed by: | Drawing code:
Submitted by: | Plot date: 19-NOV-2004 15:46 | Plot file: eldenme | Scale: 100/0000/0000
File name: S:\Benson\military\Niagara Falls\MEPS\Architecture\A301A_Design\PRINTS\A-301.dgn

PN 56873
MILITARY ENTRANCE PROCESSING STATION (MEPS)
NIAGARA FALLS, NY

BUILDING SECTIONS

Sheet reference number:
A–301

Submitted by: eJehmee
Sarthi\Documents\Bentley\Projects\ Plot Date: 19-NOV-2004 15:46
Sarthi\Documents\Bentley\Projects\ Plot: A\PRINTS\Architecture\A301 Resolution\PRINTS\A-301.dgn

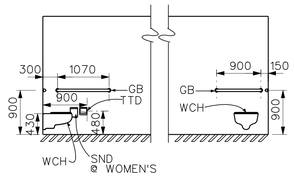

TYP. HANDICAP'D STALL ELEV.
SCALE: 1:50

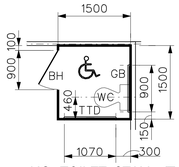

HC TOILET STALL (TYP)
SCALE: 1:50

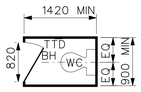

TOILET STALL (TYP)
SCALE: 1:50

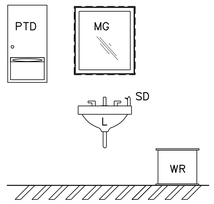

TYP ROOMS
155, 157, 158, 159 &164
NTS

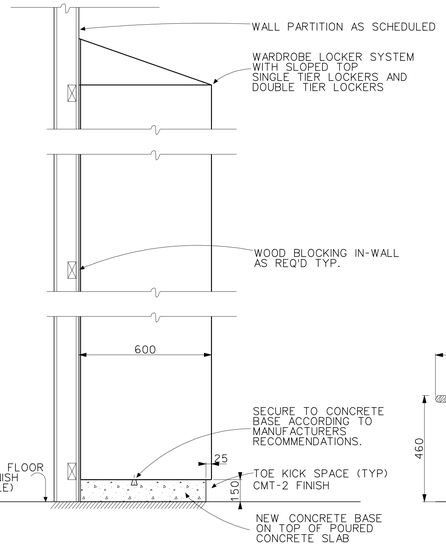

NOTES:

1. PROVIDE FINISHED PANELS @ ALL EXPOSED ENDS OF LOCKERS
2. PROVIDE FINISHED FILLER PIECES AS REQUIRED FOR CONTINUOUS FLUSH RUNS, TYP.

TYPICAL LOCKER & BENCH SECTION
SCALE: NOT TO SCALE

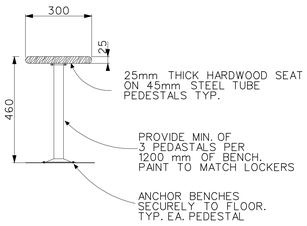

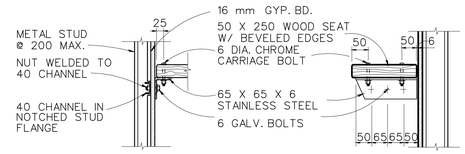

WALL MOUNTED BENCH DETAIL
SCALE: NOT TO SCALE

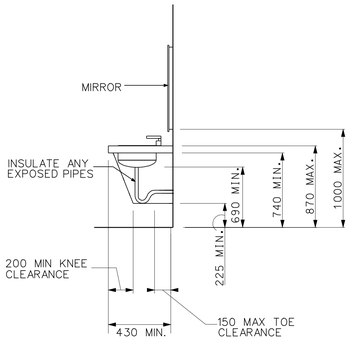

LAVATORY CLEARANCES
SCALE: 1:20

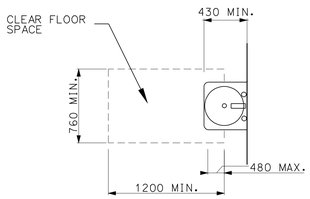

CLEAR FLOOR SPACE @ LAVATORIES
SCALE: 1:20

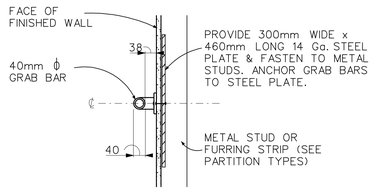

GRAB BAR ANCHORING DETAIL (TYP)
SCALE: NOT TO SCALE

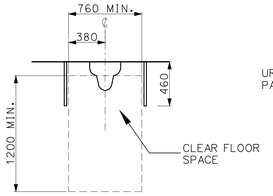

CLEAR FLOOR SPACE @ HC URINAL
SCALE: 1:20

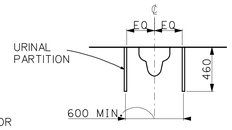

CLEAR FLOOR SPACE @ STANDARD URINAL
SCALE: 1:20

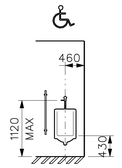

HANDICAPPED URINAL MOUNTING HEIGHT (TYP)
SCALE: 1:50

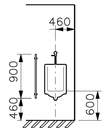

STANDARD URINAL MOUNTING HEIGHT (TYP)
SCALE: 1:50

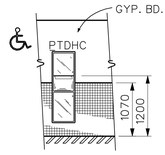

PAPER TOWEL DISPENSER RECEPTOR HANDICAPPED
SCALE: 1:50

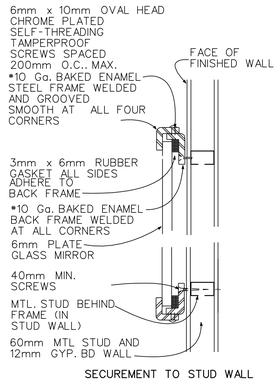

TYP. MIRROR DETAILS
NOT TO SCALE

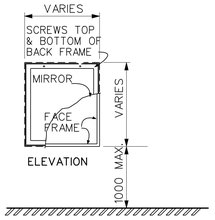

TYP. MIRROR DETAILS
NOT TO SCALE

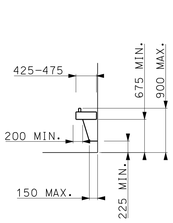

HC WATER COOLER CLEARANCES
SCALE: 1:20

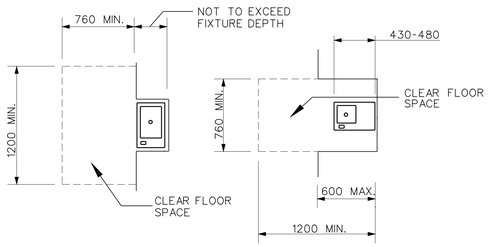

CLEAR FLOOR SPACE @ HC WATER COOLER
SCALE: 1:20

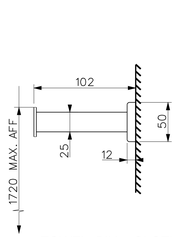

TOWEL PIN /CLOTHING HOOK
NOT TO SCALE

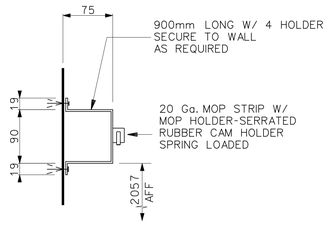

MOP RACK
NOT TO SCALE

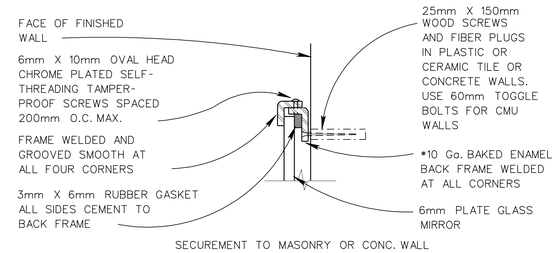

TYP. MIRROR DETAILS
NOT TO SCALE

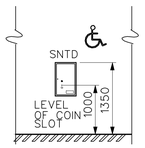

SANITARY NAPKIN TAMPON DISPENSER
SCALE: 1:50

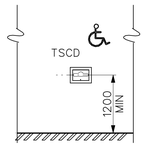

TOILET SEAT COVER DISPENSER
SCALE: 1:50

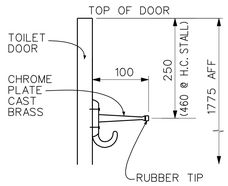

BUMPER HOOK
NOT TO SCALE

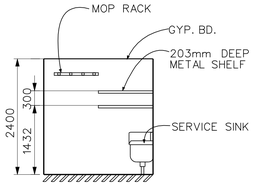

ELEVATION JANITOR'S CLOSET (TYP)
SCALE: 1:50

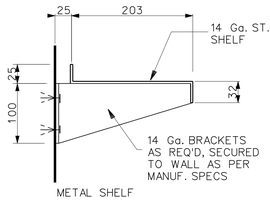

METAL SHELF
NOT TO SCALE

US Army Corps of Engineers
New York District

Symbol	Description	Date	Appr.

U.S. ARMY ENGINEER DISTRICT
CORPS OF ENGINEERS
NEW YORK, NEW YORK

Designed by: | Date: | Size: | Rev.
Dwn by: | Ckd by: | Drawing code:
Reviewed by: | Drawing file no.:
Submitted by: | Plot date: 19-NOV-2004 15:47 | Plot by: eqtimwe | Plot file: s0_400000.dgn
File name: S:\Navcon\military\Hagan Fall AFB\MERS Architectural\A400_Design(PRINTS)-400D.dgn

PN 58873
MILITARY ENTRANCE PROCESSING STATION (MEPS)
HAGAN FALLS, NY

TOILET ROOM ACCESSORIES DETAILS

Sheet reference number:
A–400

Plot Date: 19-NOV-2004 15:47
Submitted by: eqtimwe
Settings:admin\fonts;pattern;Fall AFB\MERS\Arch\A400_Design(PRINTS)A-400D.dgn

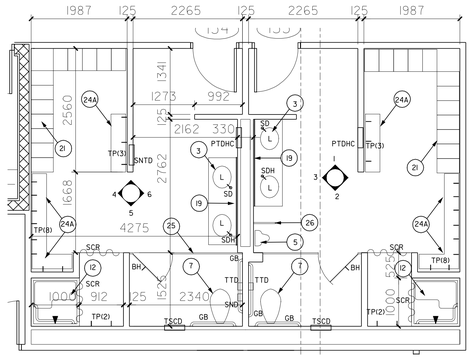

A WOMENS LOCKER RM 134
MENS LOCKER RM 133
A1O1 A401 A1O1C SCALE: 1:50

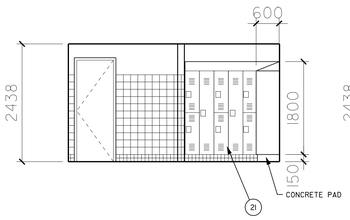

1 ELEVATION
SCALE: 1:50

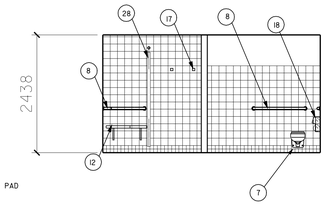

2 ELEVATION
SCALE: 1:50

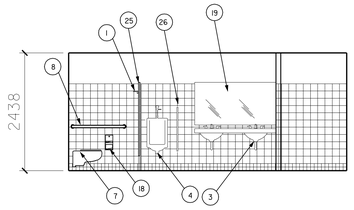

3 ELEVATION
SCALE: 1:50

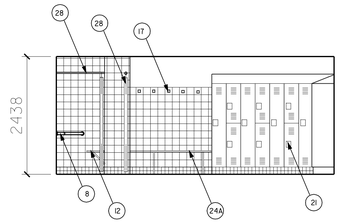

4 ELEVATION
SCALE: 1:50

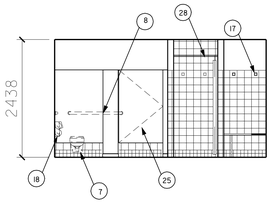

5 ELEVATION
SCALE: 1:50

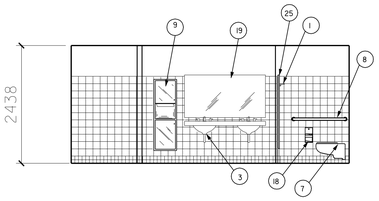

6 ELEVATION
SCALE: 1:50

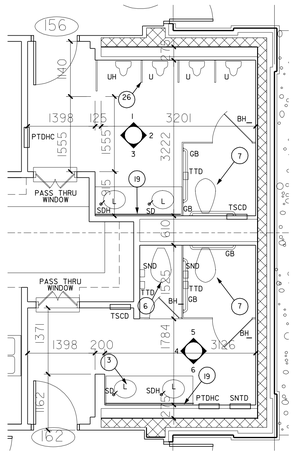

B MALE URINALYSIS RM 156
FEMALE URINALYSIS RM 162
A1O1 A401 A1O1B SCALE: 1:50

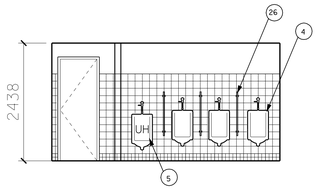

1 ELEVATION
SCALE: 1:50

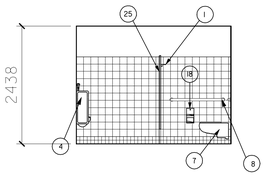

2 ELEVATION
SCALE: 1:50

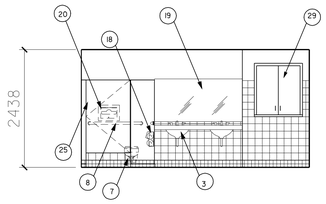

3 ELEVATION
SCALE: 1:50

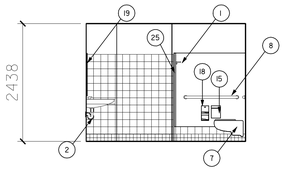

4 ELEVATION
SCALE: 1:50

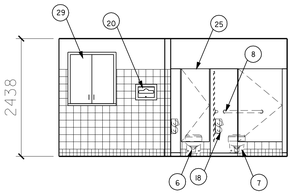

5 ELEVATION
SCALE: 1:50

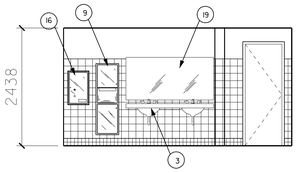

6 ELEVATION
SCALE: 1:50

LEGEND

	GYPSUM BOARD & METAL STUD WALL
	CMU WALL
3	NEW DOOR & DOOR NUMBER
7 / 8 / 5 / 6	INTERIOR ELEVATION MARKER
A	WALL PARTITION TYPE (DWG. A-503)
6 / D	COLUMN GRID INDICATOR
	REINFORCED CONCRETE WALL
	COLUMN
24	BATHROOM ACCESSORY INDICATOR

SCHEDULE FOR TOILET ROOM ACCESSORIES

	ABBV.	ACCESSORIES	TOTAL QTY.
1	BH	BUMPER HOOK	10
2	——	NOT USED	0
3	L	LAVATORY	21
4	U	URINAL	4
5	UH	URINAL HANDICAPPED	3
6	WC	WATER CLOSET	6
7	WCH	WATER CLOSET HANDICAPPED	6
8	GB	GRAB BAR	12
9	PTDHC	PAPER TOWEL DISPENSER/RECEPTACLE HANDICAPPED	6
10	PTD	PAPER TOWEL DISPENSER	7
11	PTDWR	PAPER TOWEL DISPENSER/WASTE RECEPTACLE	2
12	SHO	SHOWER WITH FOLD UP SEAT	2
13	SD	SOAP DISPENSER (DECK MOUNTED)	9
14	SDH	SOAP DISPENSER HANDICAPPED (DECK MOUNTED)	6
15	SND	SANITARY NAPKIN DISPOSAL	7
16	SNTD	SANITARY NAPKIN & TAMPON DISPENSER (RECESS)	3
17	TP	TOWEL PIN / CLOTHING HOOKS	60
18	TTD	TOILET TISSUE DISPENSER	12
19	MG	MIRROR GLASS	13
20	TSCD	TOILET SEAT COVER DISPENSER (RECESS)	8
21	——	LOCKERS W/ SLOPED TOP	36
22	SS	SERVICE SINK	1
23	SMHD	SHELF, METAL, HEAVY DUTY	1
24A	——	BENCH	
24B	——	NOT USED	
25	——	TOILET PARTITION	
26	——	URINAL PARTITION	
27	——	MOP RACK	1
28	SCR	SHOWER CURTAIN AND ROD	4
29	——	PASS THRU WINDOW W/ FROSTED GLASS	2
30	BCS	BABY CHANGING STATION	2
31	WR	WASTE RECEPTACLE	

NOTES:

1. SEE DWG. A-105 FOR WALL & FLOOR TILE PATTERNS.
2. SEE DWG. A-600 FOR INTERIOR FINISH SCHEDULE.
3. SEE DWG. A-701, DETAIL 19 FOR LAVATORY DETAIL.

1 0 1 2 m
SCALE: 1:50

ALL DIMENSIONS ARE SHOWN IN MILLIMETERS.

US Army Corps of Engineers
New York District

Symbol	Description	Date	Appr.
SDR. SUBMISSION		10/04/04	
90% SUBMISSION		09/09/04	
65% SUBMISSION		03/19/04	

Designed by: | Date: | Size: | Rev.
Dwn by: | Ckd by: | Drawing file no:
Reviewed by: | Drawing code:
Submitted by: | Plot date: 19-NOV-2004 16:47 | Plot for: 400scale | Scale: SC:0700000000000

U.S. ARMY ENGINEER DISTRICT
CORPS OF ENGINEERS
NEW YORK, NEW YORK

Title name: S:\Services\military\Niagara Falls\AFRB\MEPS\Architectural\90%\Design\R04070_A-401.dgn

MILITARY ENTRANCE PROCESSING STATION (MEPS)
PN 59873
NIAGARA FALLS, NY

ENLARGED BATHROOM PLANS & ELEVATIONS

Sheet reference number:
A–401

Submitted by: e3jetmwe
Plot Date: 19-NOV-2004 15:47
Saf:Nor:admin:Nor:pkhugare Fail: AFB\MEP\Architectural\90%\Design\R04070_A-401.dgn

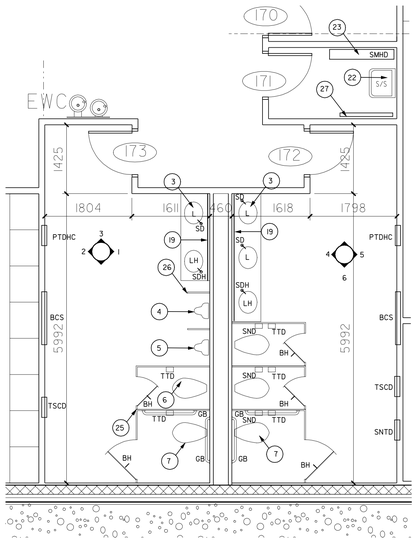

JANITORS CLOSET RM 171
WOMENS TOILET RM 172
MENS TOILET RM 173

C A101 A402 A101B SCALE: 1 : 50

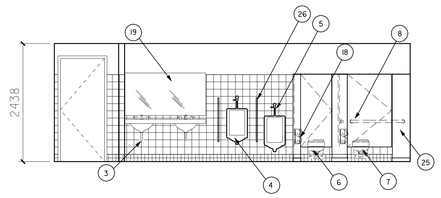

1 ELEVATION
SCALE: 1 : 50

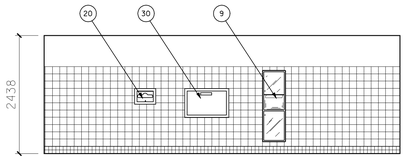

2 ELEVATION
SCALE: 1 : 50

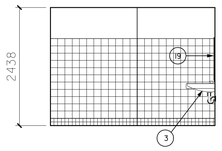

3 ELEVATION
SCALE: 1 : 50

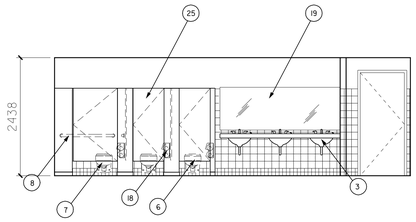

4 ELEVATION
SCALE: 1 : 50

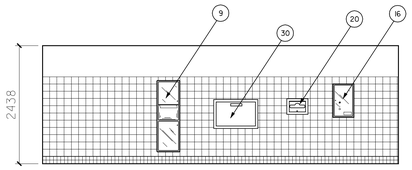

5 ELEVATION
SCALE: 1 : 50

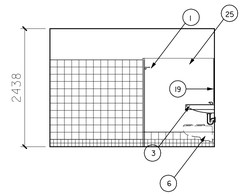

6 ELEVATION
SCALE: 1 : 50

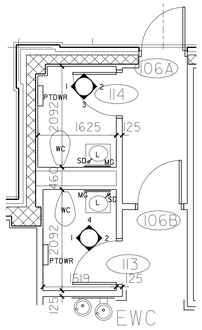

WOMENS TOILET RM 113
MENS TOILET RM 114

D A101 A402 A101A SCALE: 1 : 50

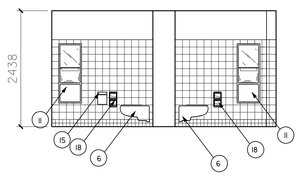

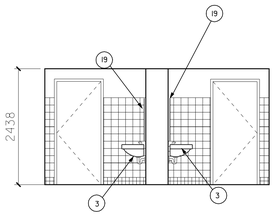

2 ELEVATION
SCALE: 1 : 50

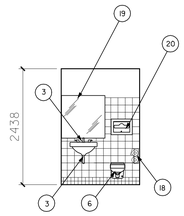

3 ELEVATION
SCALE: 1 : 50

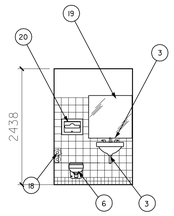

4 ELEVATION
SCALE: 1 : 50

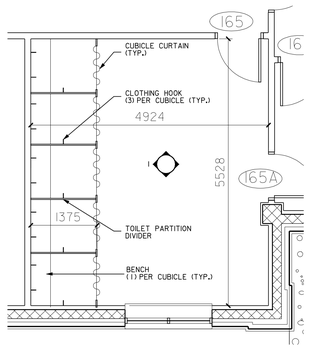

E A101 A402 A101B FEMALE ORTHO ROOM 165
SCALE: 1 : 50

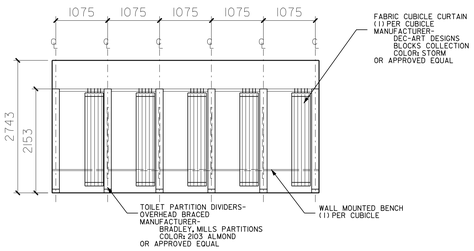

1 ELEVATION
SCALE: 1 : 50

NOTE:
ALL MAUFACTURER'S COLORS, PATTERNS & TYPE INDICATED ARE FOR REFERENCE PURPOSES ONLY. THE REFERENCES ARE USED TO INDICATE THE INTENDED TYPE, DETAIL, COLOR AND PATTERN. IT IS NOT INTENDED TO LIMIT THE SELECTION OF OTHER MANUFACTURERS PRODUCTS OF SIMLAR TYPE, DETAIL, COLOR, & PATTERN.

LEGEND

	GYPSUM BOARD & METAL STUD WALL
	CMU WALL
3	NEW DOOR & DOOR NUMBER
7 5 8 6	INTERIOR ELEVATION MARKER
A	WALL PARTITION TYPE (DWG. A-503)
6 D	COLUMN GRID INDICATOR
	REINFORCED CONCRETE WALL
	COLUMN
24	BATHROOM ACCESSORY INDICATOR

SCHEDULE FOR TOILET ROOM ACCESSORIES

	ABBV.	ACCESSORIES	TOTAL QTY.
1	BH	BUMPER HOOK	10
2	——	NOT USED	0
3	L	LAVATORY	21
4	U	URINAL	4
5	UH	URINAL HANDICAPPED	3
6	WC	WATER CLOSET	6
7	WCH	WATER CLOSET HANDICAPPED	6
8	GB	GRAB BAR	12
9	PTDHC	PAPER TOWEL DISPENSER/RECEPTACLE HANDICAPPED	6
10	PTD	PAPER TOWEL DISPENSER	7
11	PTDWR	PAPER TOWEL DISPENSER/WASTE RECEPTACLE	2
12	SHO	SHOWER WITH FOLD UP SEAT	2
13	SD	SOAP DISPENSER (DECK MOUNTED)	9
14	SDH	SOAP DISPENSER HANDICAPPED (DECK MOUNTED)	6
15	SND	SANITARY NAPKIN DISPOSAL	7
16	SNTD	SANITARY NAPKIN & TAMPON DISPENSER (RECESS)	3
17	TP	TOWEL PIN / CLOTHING HOOKS	60
18	TTD	TOILET TISSUE DISPENSER	12
19	MG	MIRROR GLASS	13
20	TSCD	TOILET SEAT COVER DISPENSER (RECESS)	8
21	——	LOCKERS W/ SLOPED TOP	36
22	SS	SERVICE SINK	1
23	SMHD	SHELF, METAL, HEAVY DUTY	1
24A	——	BENCH	
24B	——	NOT USED	
25	——	TOILET PARTITION	
26	——	URINAL PARTITION	
27	——	MOP RACK	1
28	SCR	SHOWER CURTAIN AND ROD	4
29	——	PASS THRU WINDOW W/ FROSTED GLASS	2
30	BCS	BABY CHANGING STATION	2
31	WR	WASTE RECEPTACLE	

NOTES:
1. SEE DWG. A-105 FOR WALL & FLOOR TILE PATTERNS.
2. SEE DWG. A-600 FOR INTERIOR FINISH SCHEDULE.
3. SEE DWG. A-701, DETAIL 19 FOR LAVATORY DETAIL.

1 0 1 2 m
SCALE: 1:50

ALL DIMENSIONS ARE SHOWN IN MILLIMETERS.

US Army Corps of Engineers
New York District

Symbol	Description	Date	Appr.
95% SUBMISSION		NOV/04	
100% SUBMISSION		NOV/04	
100% SUBMISSION		NOV/04	

U.S. ARMY ENGINEER DISTRICT
CORPS OF ENGINEERS
NEW YORK, NEW YORK

Designed by: | Date: | Size: | Rev.:
Dwn by: | Ckd by: | Drawing file no.:
Reviewed by: | Drawing code:
Submitted by: | Plot date: 19-NOV-2004 16:47 | Plot for Scale: 50.000000000000
File name: S:\Services\Military\Niagara Falls\AFRB\Architectural\95% Design\FINAL\TS-A-402.dgn

MILITARY ENTRANCE PROCESSING STATION (MEPS)
PN 59873
NIAGARA FALLS, NY

ENLARGED BATHROOM PLANS & ELEVATIONS

Sheet reference number:
A–402

Submitted by: e3jetmwe
Saf1ter\admin\tsp\Niagara Fall AFRB\MEPS\Architectural\TS_Design\FINAL\TS-A-402.dgn
Plot Date: 19-NOV-2004 16:47

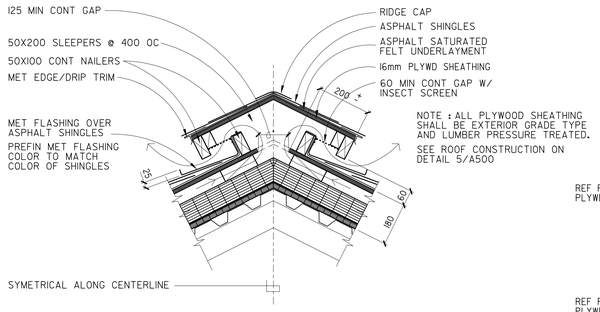

4 RIDGE VENT DETAIL (TYP U.O.N.)
A300 A301 A500 (612 PITCH SHOWN- 412 PITCH DET SIM.)
SCALE 1:10

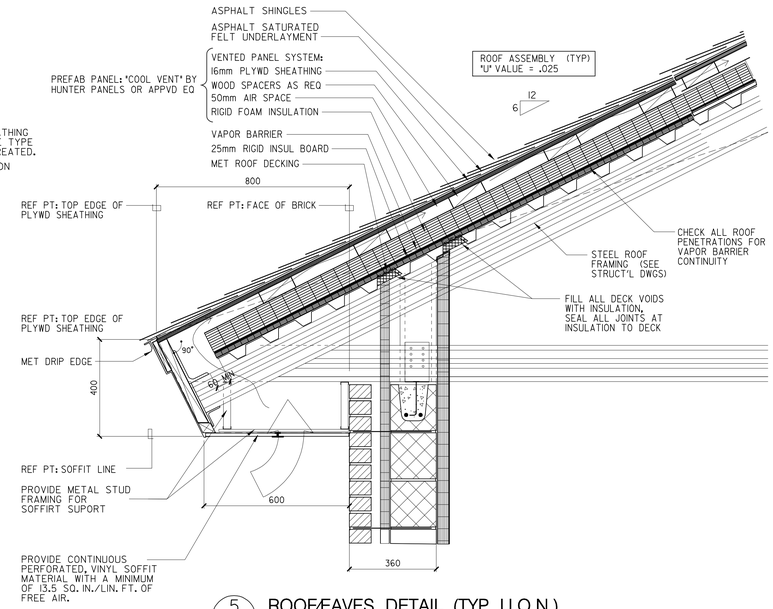

5 ROOF/EAVES DETAIL (TYP U.O.N.)
A500 (612 PITCH SHOWN- 412 PITCH DET SIM.)
SCALE 1:10

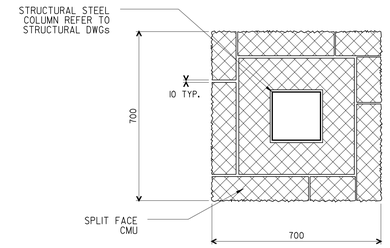

A COLUMN DETAIL (TYP)
A500 SCALE 1:10

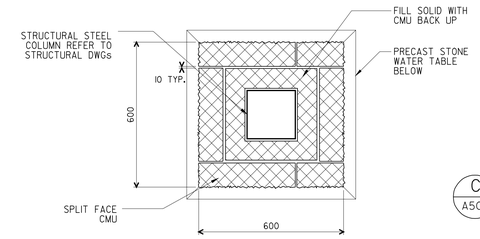

B COLUMN DETAIL (TYP)
A500 SCALE 1:10

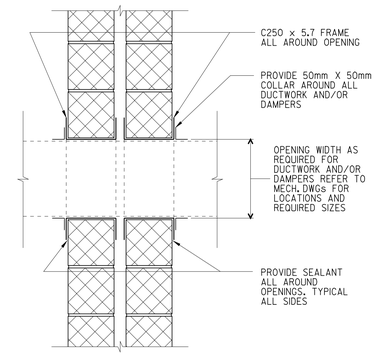

C TYPICAL CHANNEL FRAME AT SEISMIC MASONRY OPENINGS
A500 SCALE 1:10

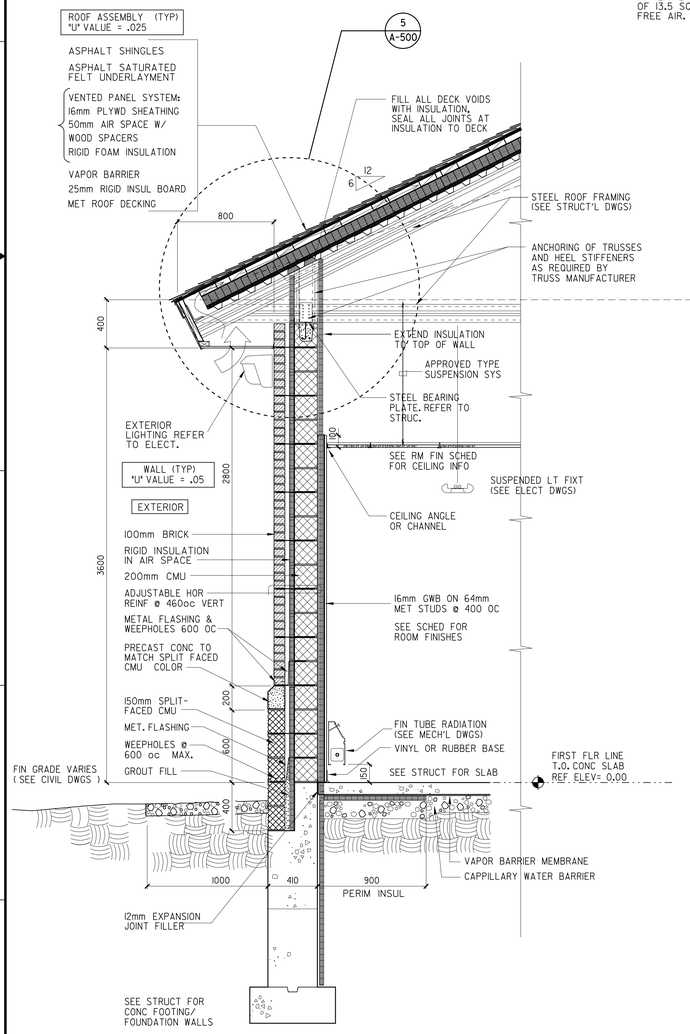

1 TYP. WALL SECTION (U.O.N.)
A300 A301 A500 SCALE 1:20

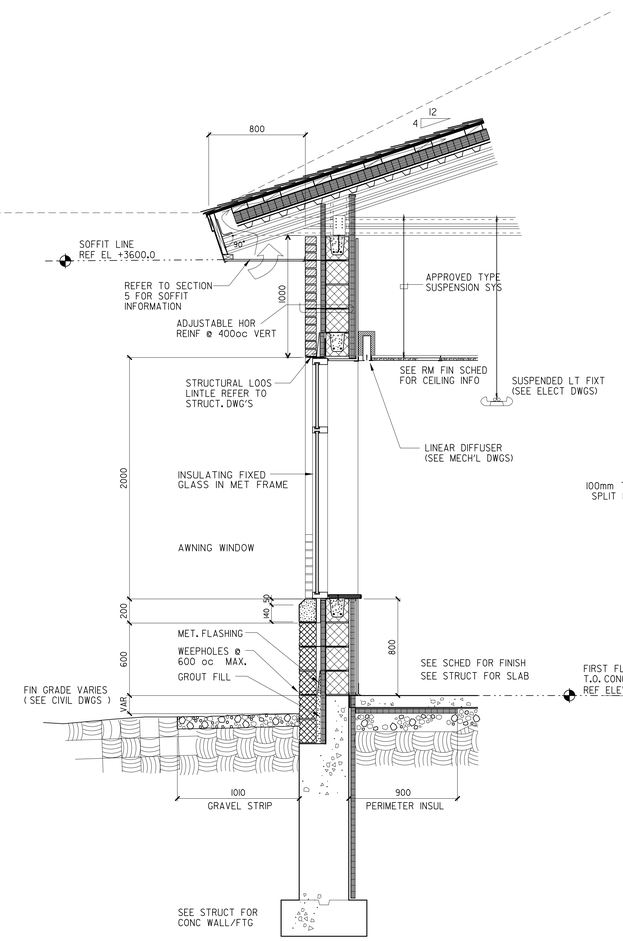

2 TYPICAL WALL SECTION THRU WINDOW (U.O.N.)
A300 A301 A500 SCALE 1:20

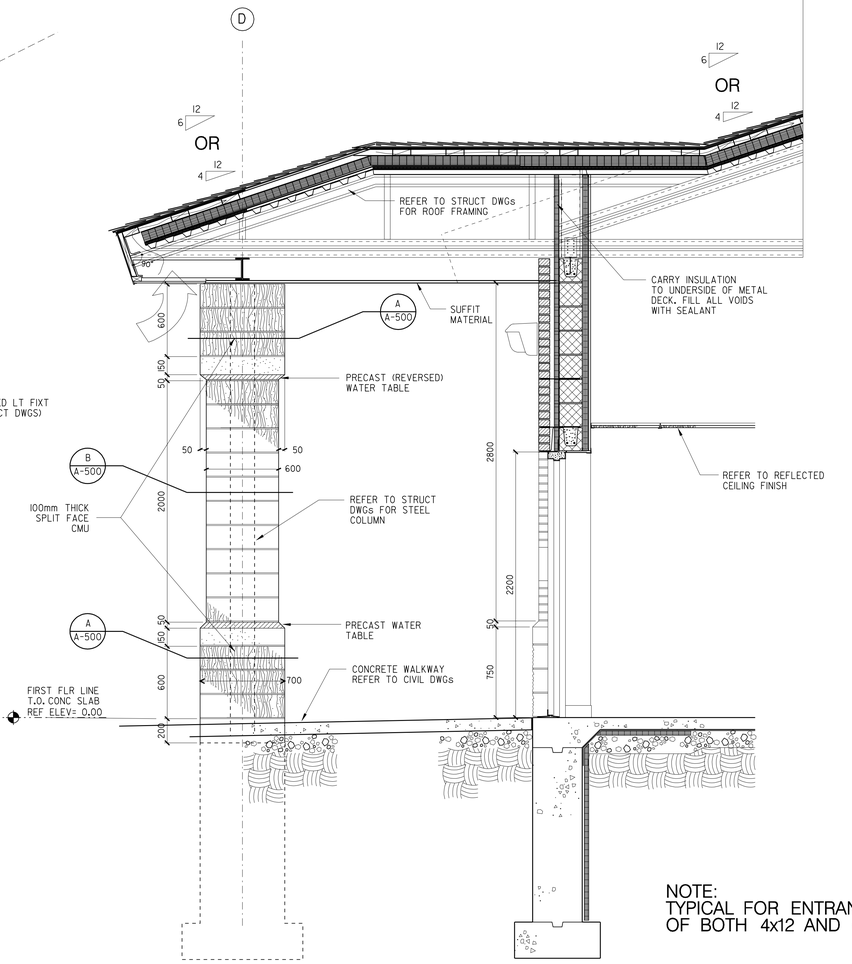

3 TYPICAL WALL SECTION THRU EXT DOOR (U.O.N.)
A300 A301 A500 SCALE 1:20

NOTE:
TYPICAL FOR ENTRANCE WAYS OF BOTH 4x12 AND 6x12 SLOPES

US Army Corps of Engineers
New York District

Symbol	Description	Date	Appr.
	90% SUBMISSION	10/04/04	
	60% SUBMISSION	06/01/04	
	35% SUBMISSION	03/25/04	
	15% SUBMISSION		

Designed by: | Date: | Size: | Rev.:
Dwn by: | Ckd by: | Drawing file no.:
Reviewed by: | Drawing code:
Submitted by: | Plot date: 19-NOV-2004 15:47 | Plot by: | Scale: 0.000000000000

U.S. ARMY ENGINEER DISTRICT
CORPS OF ENGINEERS
NEW YORK, NEW YORK

MILITARY ENTRANCE PV 59873
MEPS RECEIVING STATION (MEPS)
NIAGARA FALLS, NY

WALL SECTIONS

Sheet reference number:
A–500

File name: S:\Structural\Misc\Niagara Fall AFS\MEPS\Architectural\Dwg. Design\PROTB\A-500.dgn

Plot date: 19-NOV-2004 15:47
Plot by:
Submitted by: e3jetmwe
S:\structural\Misc\Niagara Fall AFS\MEPS\Architectural\Dwg. Design\PROTB\A-500.dgn

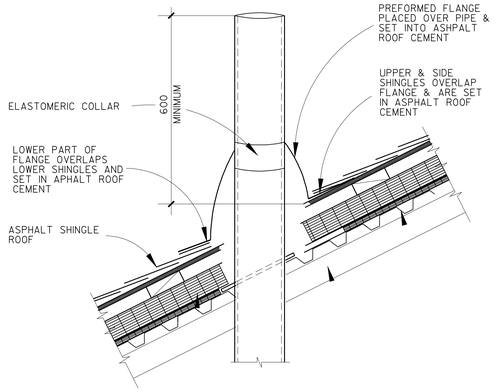

1 TYPICAL VENT PIPE DETAIL
SCALE NONE

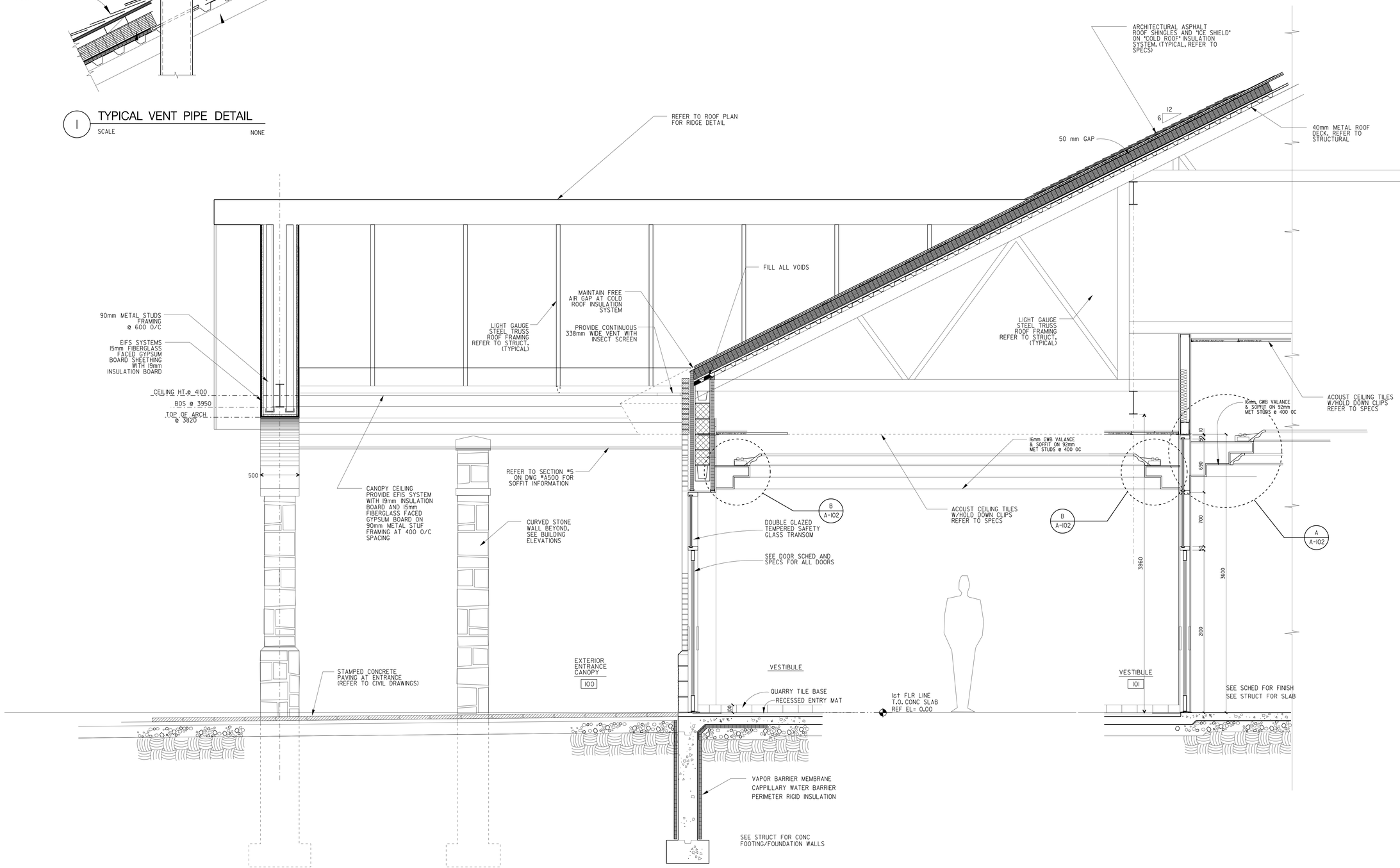

1 A300 SECTION THRU VESTIBULE
SCALE 1:20

US Army Corps of Engineers
New York District

Symbol	Description	Date	Appr.
	80% SUBMISSION	10/04/04	
	95% SUBMISSION	09/30/04	
	15% SUBMISSION	07/30/04	

Designed by:	Date:
Dwn by:	Ckd by:
Reviewed by:	Drawing file no.:
Submitted by:	Drawing code:
	Plot date: 19-NOV-2004 15:48 Plot by: edjetmew Size: 20.00000x30.00000

U.S. ARMY ENGINEER DISTRICT
CORPS OF ENGINEERS
NEW YORK, NEW YORK

File name: S:\Design\military\Niagara Falls\MEP\Architectural\A-501.dgn

PN 58973
MILITARY ENTRANCE PROCESSING STATION (MEPS)
NIAGARA FALLS, NY

WALL SECTIONS

Sheet reference number:
A–501

Submitted by: edjetmew
Plot Date: 19-NOV-2004 15:48
Latter:nbmilitar:pnbpgpro Fail AFBANEC:Architectural:A500.Dwg:pnbNIST545-501.dgn

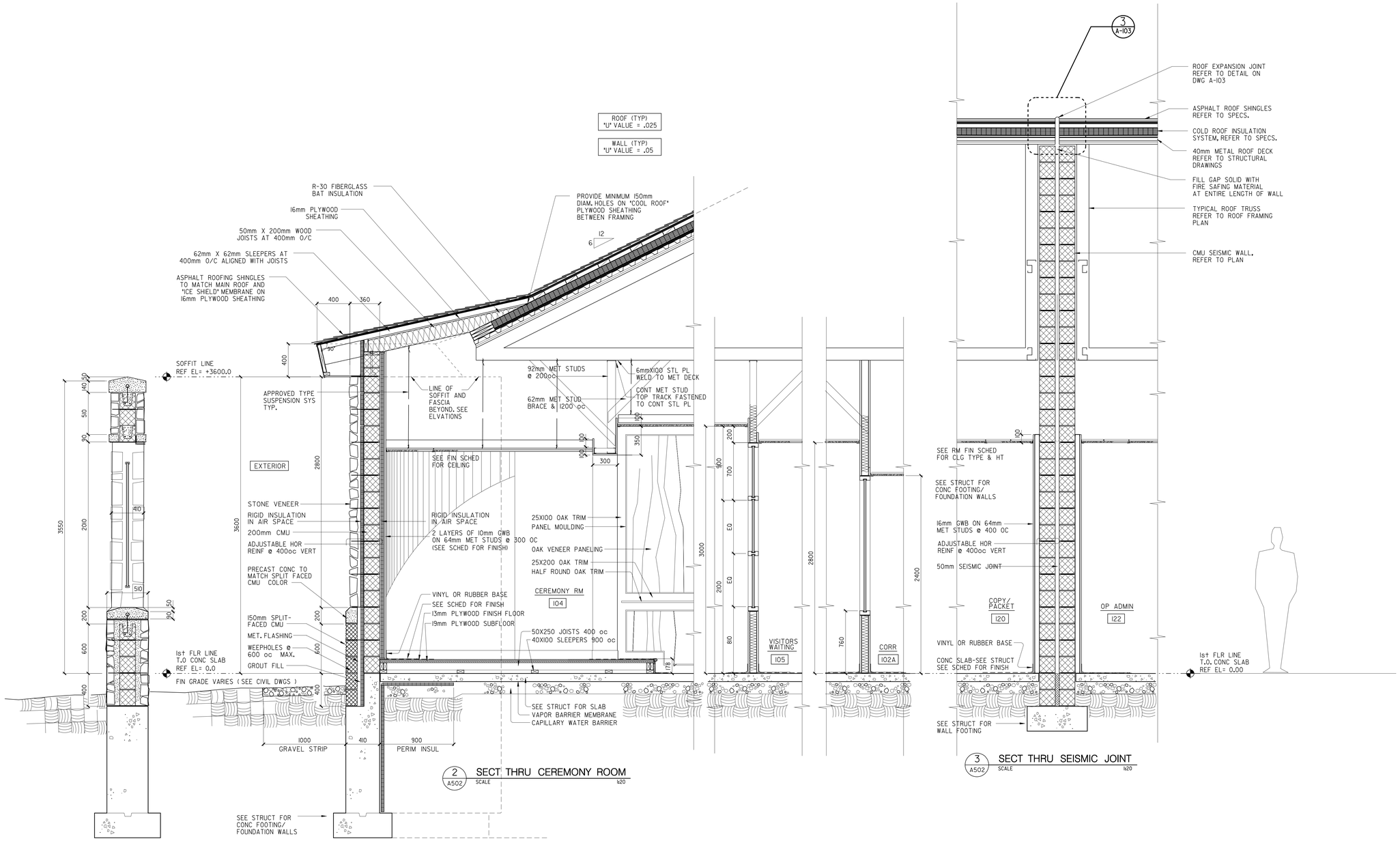

1 A502 SECT THRU FREE STANDING WALL
SCALE 1:20

REFER TO DRAWING A-503

2 A502 SECT THRU CEREMONY ROOM
SCALE 1:20

3 A502 SECT THRU SEISMIC JOINT
SCALE 1:20

US Army Corps of Engineers
New York District

Symbol	Description	Date	Appr.
	80% SUBMISSION	10/04/04	
	35% SUBMISSION	09/09/04	
	15% SUBMISSION	05/30/04	

Designed by:
Dwn by: Ckd by:
Reviewed by:
Submitted by:
Date:
Drawing file no.:
Drawing code:
Plot date: 19-NOV-2004 15:48
Plot by: ADMIN
Scale: 20.000000000000
Size: Rev.:

U.S. ARMY ENGINEER DISTRICT
CORPS OF ENGINEERS
NEW YORK, NEW YORK

File name: S:\Services\military\Niagara Falls\MEPS\Architectural\A502 Design\PRINTS\A-502.dgn

PN 58873
MILITARY ENTRANCE PROCESSING STATION (MEPS)
NIAGARA FALLS, NY

WALL SECTIONS

Sheet reference number:
A-502

Plot Date: 19-NOV-2004 15:48
Submitted by: ejetmew
Saved by: admin\jrodriguez Full AFBANG\Architectural\A502 Design\PRINTS\A-502.dgn

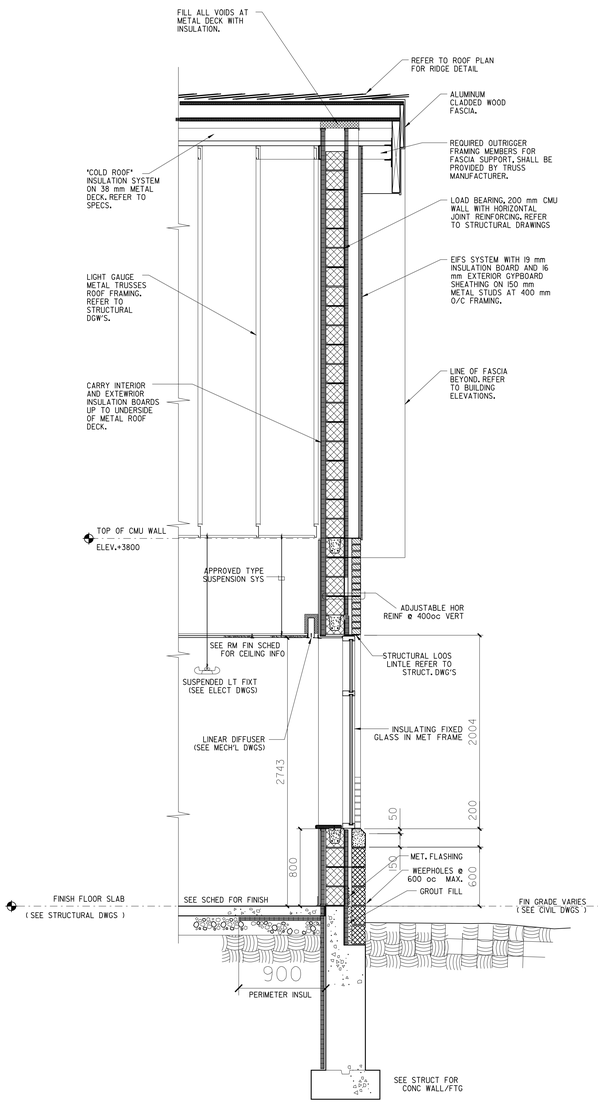

2 A300 A301 A500 TYPICAL GABLE WALL SECTION THRU WINDOW (U.O.N.)
SCALE 1:20

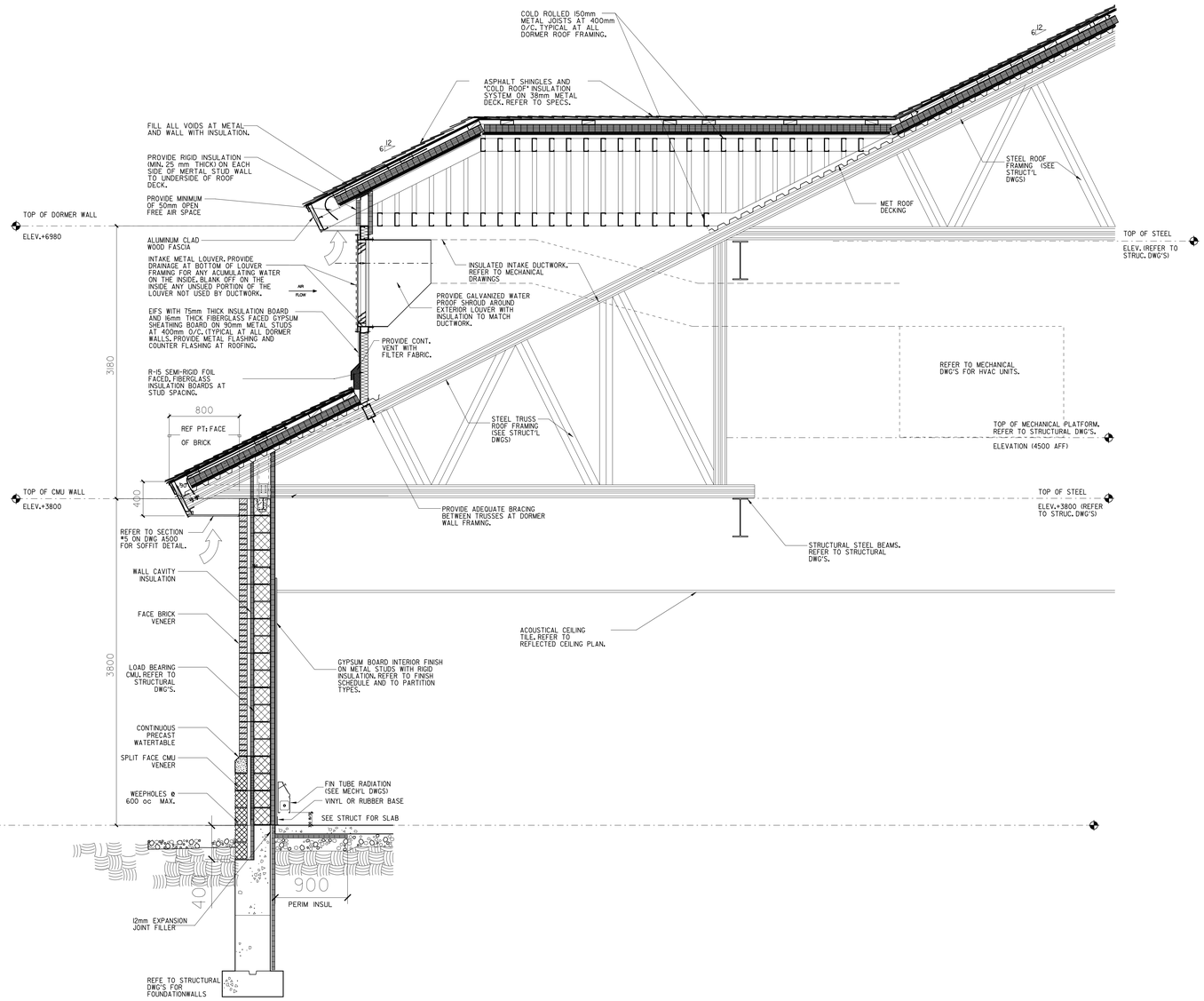

5 A500 ROOF/EAVES/DORMER DETAIL (TYP U.O.N.)
(6:12 PITCH SHOWN- 4:12 PITCH DET SIM.)
SCALE 1:10

US Army Corps of Engineers
New York District

Symbol	Description	Date	Appr.

U.S. ARMY ENGINEER DISTRICT
CORPS OF ENGINEERS
NEW YORK, NEW YORK

Designed by: | Date: | Size: | Rev.:
Dwn by: | Ckd by: | Drawing file no.:
Reviewed by: | Drawing code:
Submitted by: | Plot date: 19-NOV-2004 15:57 | Plot file: a502.dgn | Scale: 1:20000000.000

File name: S:\Harvon\Military\Niagara Fall ATR\ARCH\Architectural\DWG\Design\PermitSet\A-502A.dgn

PN 56873
MILITARY ENTRANCE PROCESSING STATION (MEPS)
NIAGARA FALLS, NY

WALL SECTIONS

Sheet reference number:
A–502A

Submitted by: e3jeffmee
pathfinder=dmillier;pwidgers Est. AE$MEPS$$$dmillier:ar502a Design$PermitSet$A-502A.dgn Plot Date: 19-NOV-2004 15:57

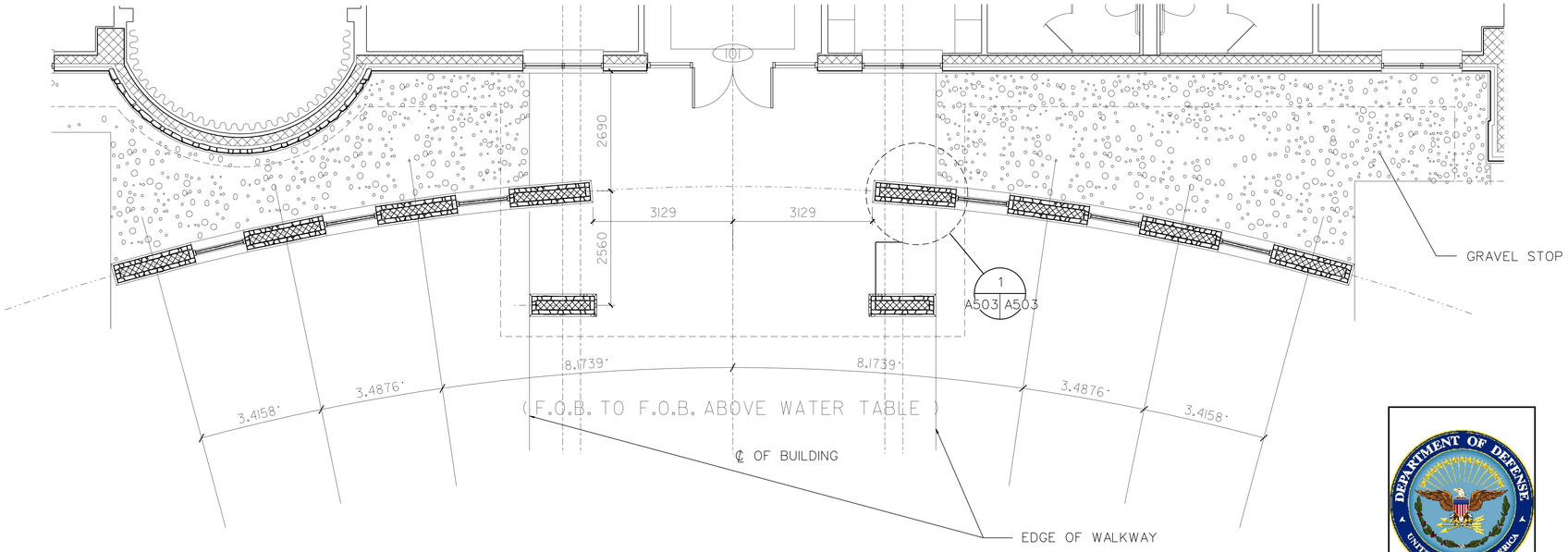

A
A503
ENLARGED ENTRANCE CANOPY PLAN
SCALE: 1:100

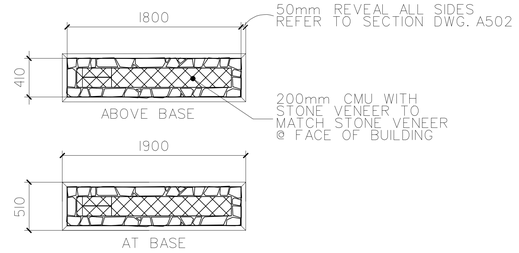

1
A503
COLUMN @ CURVED WALL DETAIL
SCALE: 1:50

DEPT. OF DEFENSE EMBLEM

ARMY EMBLEM

MARINE CORPS EMBLEM

NAVY EMBLEM

AIRFORCE EMBLEM

COAST GUARD EMBLEM

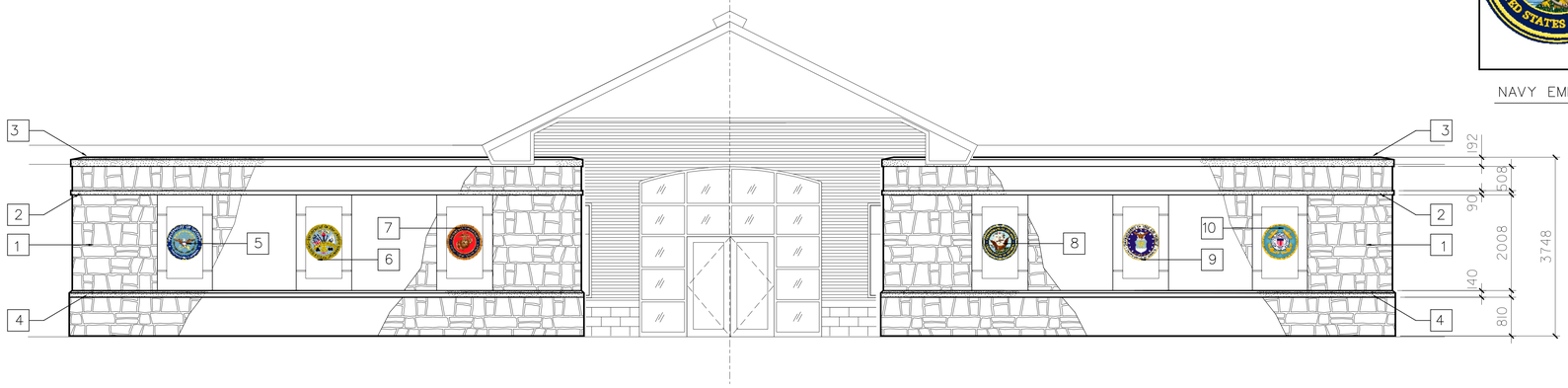

B
A503
CURVED WALL ELEVATION
SCALE: 1:100

C
A503
SERVICE EMBLEMS
SCALE: NTS

NOTE:
COLOR SELECTION FOR PANELS SHALL BE PROVIDED BY GOVERNMENT

CURVED WALL MATERIAL LEGEND

1. *STONE VENEER*
   MANUFACTURER : ARRISCRAFT INTERNATIONAL
   COLLECTION: CITADEL
   COLOR: DESERT BROWN
2. *PRECAST CONCRETE TRIM*
   COLOR TO MATCH STONE VENEER
3. *PRECAST CONCRETE TRIM*
   COLOR TO MATCH STONE VENEER
4. *PRECAST LIMESTONE SILL*
   COLOR TO MATCH STONE VENEER
5. *DEPARTMENT OF DEFENSE PANEL*
6. *ARMY PANEL*
7. *MARINE CORPS PANEL*
8. *NAVY PANEL*
9. *AIRFORCE PANEL*
10. *COAST GUARD PANEL*

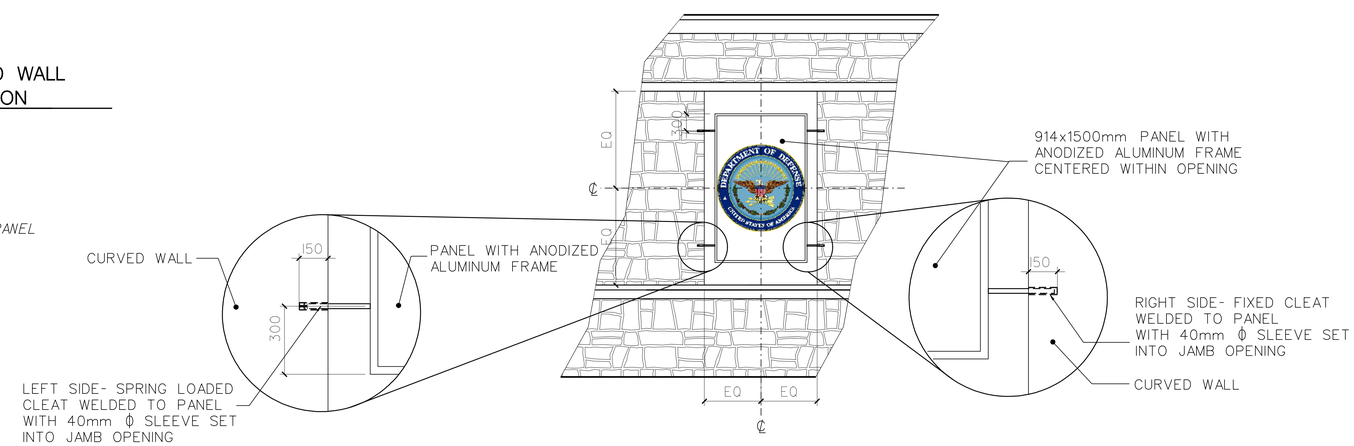

US Army Corps of Engineers
New York District

Symbol	Description	Date	Appr.

U.S. ARMY ENGINEER DISTRICT
CORPS OF ENGINEERS
NEW YORK, NEW YORK

Designed by: | Date: | Size: | Rev.:
Dwn by: | Ckd by: | Drawing file no.:
Reviewed by: | Drawing code:
Submitted by: | Plot date: 19-NOV-2004 15:48 | Plot by: eldstmwe | Scale: NONSCALE

File name: S:\Benson\military\Niagara Falls\MEPS\Architecture\A-503. Design\PRINTS\A-503.dgn

MILITARY ENTRANCE PROCESSING STATION (MEPS)
NIAGARA FALLS, NY
PN 59573

CURVE WALL DETAILS

Sheet reference number:
A–503

Plot Date: 19-NOV-2004 15:48
Submitted by: eldstmwe
Saf:\Benson\military\Niagara Falls\MEPS\Architecture\A-503. Design\PRINTS\A-503.dgn

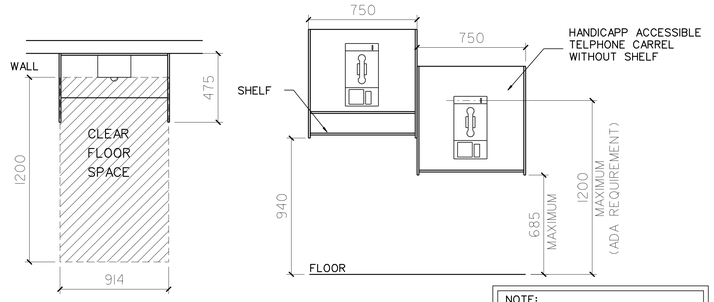

NOTE:

CONTRACTOR SHALL PROVIDE (1) STANDARD TELEPHONE CARREL AND (1) HANDICAPP ACCESSIBLE TELEPHONE CARREL @ LOBBY AREA. REFER TO FLOOR PLAN FOR LOCATION .(TYP.)

1 WALL MOUNTED TELEPHONE CARREL

SCALE: 1:20

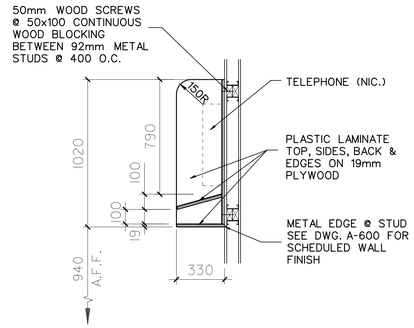

2 TELEPHONE CARREL DETAIL

SCALE: 1:20

ABBREVIATIONS FOR FIRE EXTINGUISHER

F.E.C.- SEMI-RECESSED FIRE EXTINGUISHER CABINET

S.F.E.C.- SURFACE MOUNTED FIRE EXTINGUISHER CABINET

F.E.- SURFACE MOUNTED FIRE EXTINGUISHER EQUIPT.

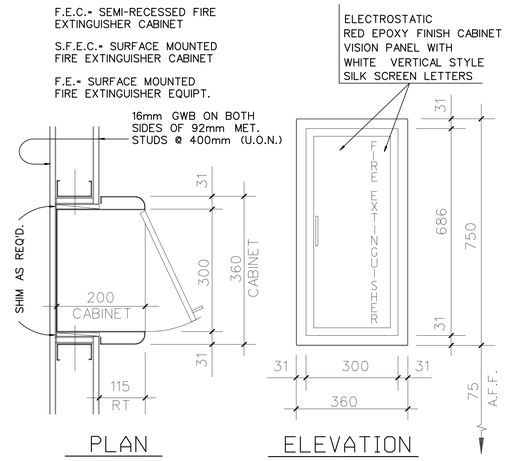

PLAN

SCALE: NTS

ELEVATION

SCALE: NTS

(SEMI-RECESSED FIRE EXTINGUISHER CABINET SHOWN)

NOTE: FIRE EXTING. CABINET TO ACCOMMODATE 2 - 10# ABC EXTINGUISHERS (TYP)

3 FIRE EXTINGUISHER CABINET

SCALE: NTS

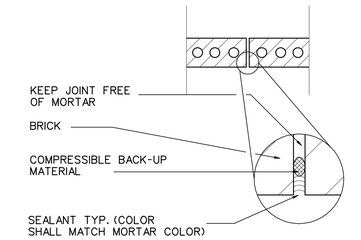

4 BRICK EXPANSION JOINT DETAIL (TYP.)

SCALE: 1:10

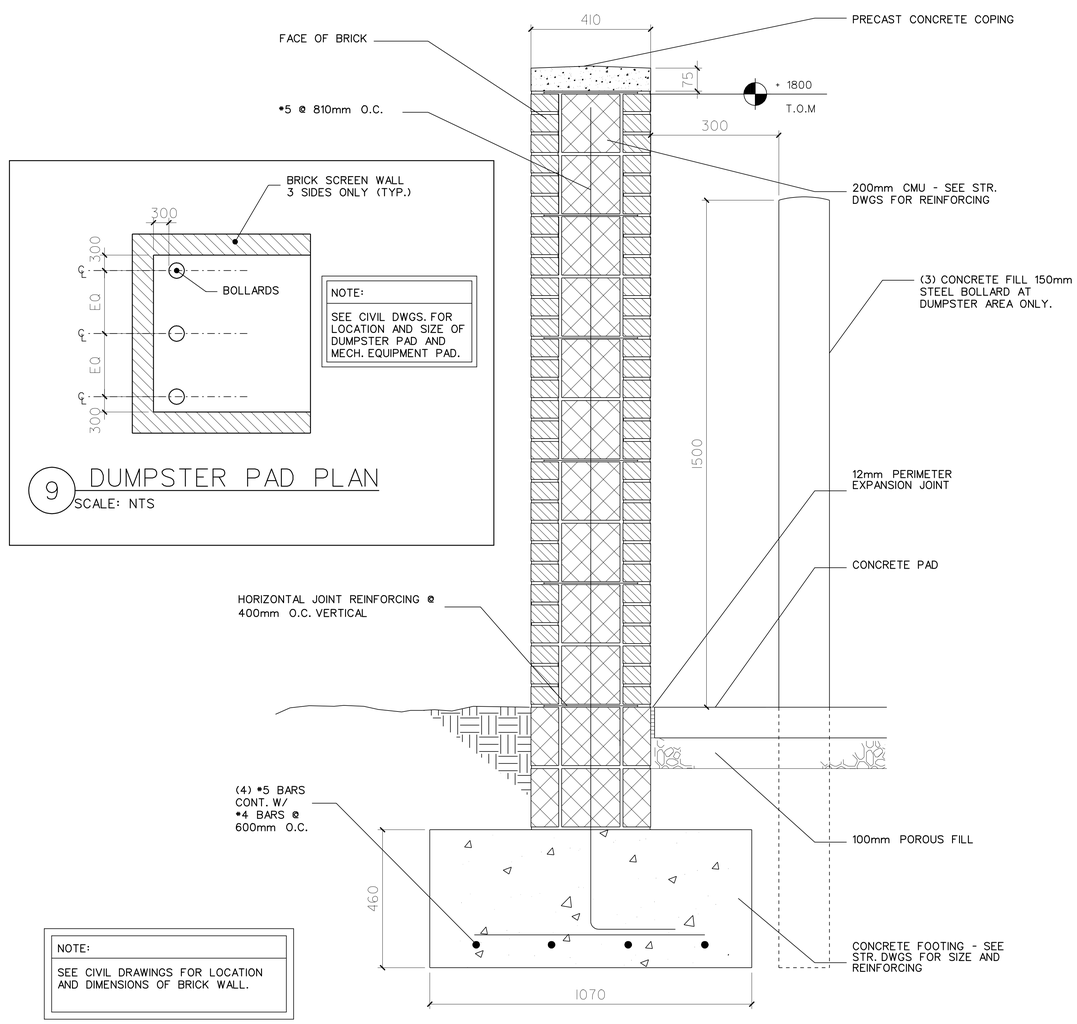

NOTE:

SEE CIVIL DWGS. FOR LOCATION AND SIZE OF DUMPSTER PAD AND MECH. EQUIPMENT PAD.

9 DUMPSTER PAD PLAN

SCALE: NTS

NOTE:

SEE CIVIL DRAWINGS FOR LOCATION AND DIMENSIONS OF BRICK WALL.

5 BRICK SCREEN WALL @ DUMPSTER & MECH. EQUIPMENT- SECTION

SCALE: NTS

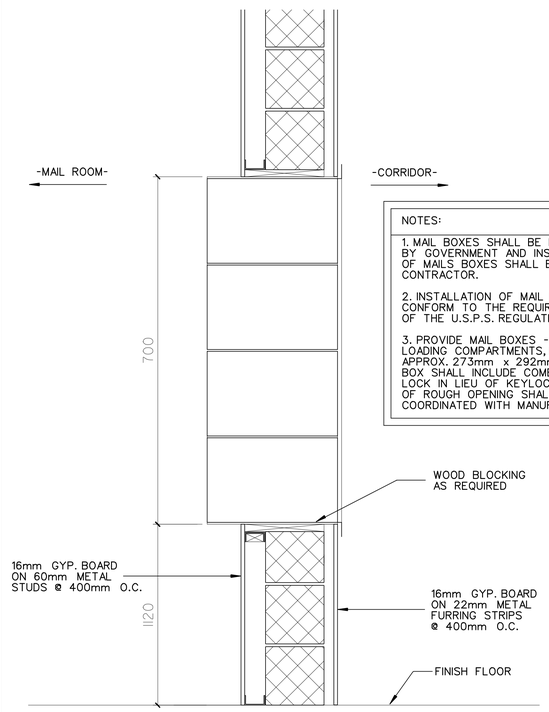

NOTES:

1. MAIL BOXES SHALL BE FURNISHED BY GOVERNMENT AND INSTALLATION OF MAILS BOXES SHALL BE DONE BY CONTRACTOR.

2. INSTALLATION OF MAIL BOXES SHALL CONFORM TO THE REQUIREMENTS OF THE U.S.P.S. REGULATIONS.

3. PROVIDE MAIL BOXES - 16 REAR LOADING COMPARTMENTS, EACH APPROX. 273mm x 292mm. EACH MAIL BOX SHALL INCLUDE COMBINATION LOCK IN LIEU OF KEYLOCKS. SIZE OF ROUGH OPENING SHALL BE COORDINATED WITH MANUFACTURER.

6 TYP. MAIL BOX SECTION

SCALE: NTS

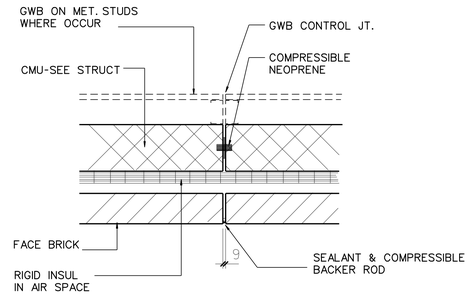

7 MASONRY CONTROL JOINT DETAIL (TYP.)

SCALE: 1:10

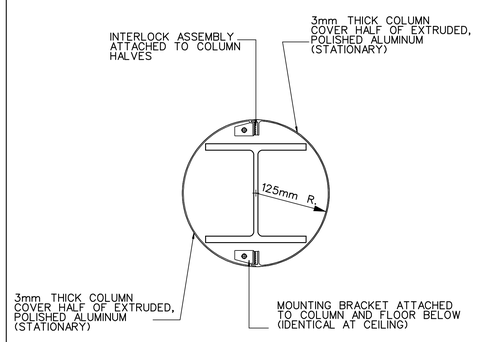

8 COLUMN DETAIL @ ROOMS 106 AND 112

SCALE: 1:10

US Army Corps of Engineers
New York District

Symbol	Description	Date	Appr.

U.S. ARMY ENGINEER DISTRICT
CORPS OF ENGINEERS
NEW YORK, NEW YORK

Designed by: | Date: | Size: | Rev:
Dwn by: | Ckd by: | Drawing file no.:
Reviewed by: | Drawing code:
Submitted by: | Plot date: 19-NOV-2004 15:48 | Plot by: a3jimwe | File: a3jimwe

PN 58973
MILITARY ENTRANCE PROCESSING STATION (MEPS)
NIAGARA FALLS, NY

MISCELLANEOUS DETAILS

Sheet reference number:
A–504

Submitted by: a3jimwe
Plot Date: 19-NOV-2004 15:48
Plot by: a3jimwe

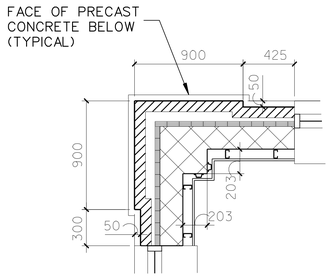

1 TYPICAL EXTERIOR CORNER PILASTER DETAIL
SCALE: 1:20

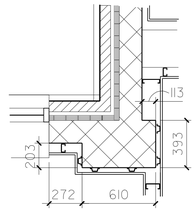

2 DETAIL @ ROOM 112
SCALE: 1:20

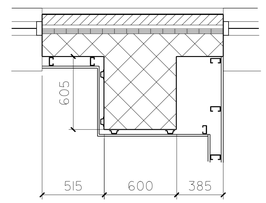

3 DETAIL @ ROOM 116
SCALE: 1:20

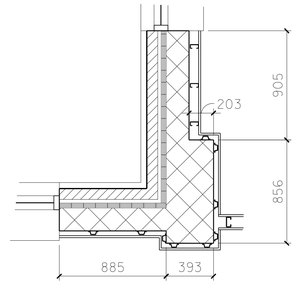

4 DETAIL @ ROOM 136
SCALE: 1:20

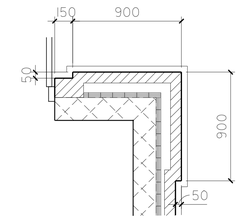

5 DETAIL @ ROOM 138
SCALE: 1:20

(TYPICAL AT CORNER WITHOUT PIERS)

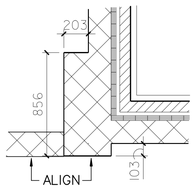

6 DETAIL @ ROOM 139
SCALE: 1:20

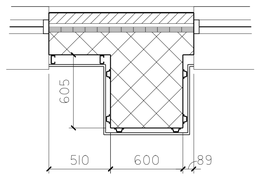

7 DETAIL @ ROOM 151
SCALE: 1:20

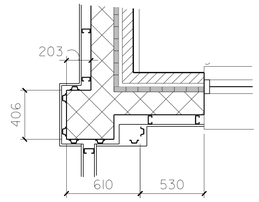

8 DETAIL @ ROOM 153
SCALE: 1:20

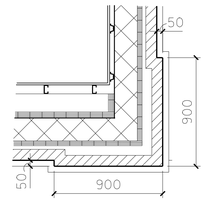

9 DETAIL @ ROOM 162
SIM. OPP. HAND @ ROOM 156
SCALE: 1:20

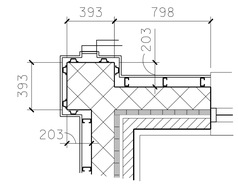

10 DETAIL @ ROOM 165
SCALE: 1:20

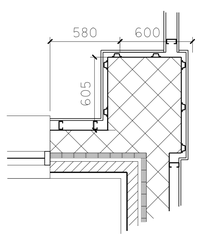

11 DETAIL @ ROOM 169
SCALE: 1:20

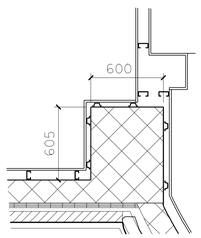

12 DETAIL @ ROOM 107
SCALE: 1:20

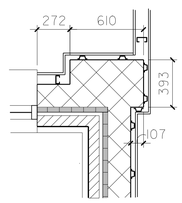

13 DETAIL @ ROOM 110
SCALE: 1:20

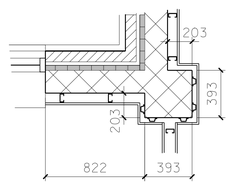

14 DETAIL @ ROOM 153
SCALE: 1:20

(LEFT SIDE SHOWN, RIGHT SIDE SIMILAR)

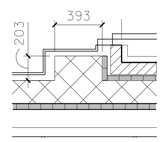

15 DETAIL @ ROOM 152A
SIM. OPP. HAND @ ROOM 163
SCALE: 1:20

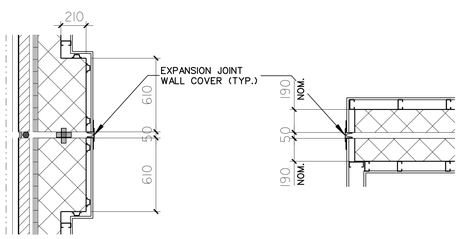

(SIM. OPP. HAND @ ROOM 149)

16 DETAIL @ ROOM 122
SEISMIC JOINT
SCALE: 1:20

NOTES

1. SEE DRAWING A-605 FOR PARTITION TYPES.
2. COORDINATE WITH FLOOR PLAN FOR LOCATION.
3. FOR WALL FINISH SEE DRAWING A-600.

LEGEND

- BRICK VENEER
- RIGID INSULATION
- 200mm CMU
- METAL STUD
- METAL FURRING
- GYPSUM WALLBOARD

US Army Corps of Engineers
New York District

Symbol	Description	Date	Appr.

U.S. ARMY ENGINEER DISTRICT
CORPS OF ENGINEERS
NEW YORK, NEW YORK

Designed by: | Date: | Size: | Rev.:
Dwn by: | Ckd by: | Drawing file no.:
Reviewed by: | Drawing code:
Submitted by: | Plot date: 19-NOV-2004 15:49 | Plot by: e3jenthwe | Scale: 0.000000000000

File name: S:\Mission\Niagara Falls\AE\MEPS\Architectural\DWG Design\PRINTS\A-505.dgn

PN 59873
MILITARY ENTRANCE PROCESSING STATION (MEPS)
NIAGARA FALLS, NY

MISCELLANEOUS DETAILS

Sheet reference number:
A–505

Submitted by: e3jenthwe
pattern:dcadmin1.cg:pmkl:cgm:s Fol: AE\MEP\Sec\Architecture\DWG Design\PRINTS\A-505.dgn Plot Date: 19-NOV-2004 15:49

ROOM FINISH SCHEDULE

ROOM NO.	ROOM	FLOOR			BASE			WEST WALL			EAST WALL			NORTH WALL			SOUTH WALL			CEILING				NOTES
		MAT.	FINISH	COLOR	MAT.	FINISH	COLOR	MAT.	FINISH	F.R. (HOUR)	MAT.	FINISH	F.R. (HOUR)	MAT.	FINISH	F.R. (HOUR)	MAT.	FINISH	F.R. (HOUR)	MAT.	FINISH	F.R. (HOUR)	HEIGHT (mm)	
101	VESTIBULE	PPT	NON-SLIP	PPT-1,2,3	PPT	NON-SLIP	PPT-1,2	GL			GL			GWB	PT-1		GWB	PT-1		GWB			3657	1, 5, 6, 11
102	MAIN LOBBY	PPT	POLISHED	PPT-1,2,3	PPT	POLISHED	PPT-1,2	GWB	VWC-1 VWC-2		GWB	VWC-1 VWC-2		GWB	VWC-1 VWC-2		GWB	VWC-1 VWC-2		ACT-1			4267	5, 6, 11
102A	MAIN LOBBY	PPT	POLISHED	PPT-1,2,3	PPT	POLISHED	PPT-1,2	GWB	VWC-1 VWC-2		GWB	VWC-1 VWC-2		GWB	VWC-1 VWC-2		GWB	VWC-1 VWC-2		ACT-1			4267	5, 6, 11
102B	MAIN LOBBY	PPT	POLISHED	PPT-1,2,3	PPT	POLISHED	PPT-1,2	GWB	VWC-1 VWC-2		GWB	VWC-1 VWC-2		GWB	VWC-1 VWC-2		GWB	VWC-1 VWC-2		ACT-1			4267	5, 6, 11
102C	MAIN LOBBY	PPT	POLISHED	PPT-1,2,3	PPT	POLISHED	PPT-1,2	GWB	VWC-1 VWC-2		GWB	VWC-1 VWC-2		GWB	VWC-1 VWC-2		GWB	VWC-1 VWC-2		ACT-1			4267	5, 6, 11
103	BRIEFING ROOM	CPT		CPT-2	VWB		VWB-1	GWB	VWC-1 PT-1		GWB	VWC-1 PT-1		GWB	VWC-1 PT-1		GWB	VWC-1 PT-1		ACT-1			2743	6
104	CEREMONY ROOM	CPT		CPT-3	OAK TRIM		WST-1	GWB	PT-3		GL GWB	VWC-1		WOOD VENEER	WST-1		WOOD VENEER	WST-1		ACT-2 GWB			3048	6, 8
105	VISITORS WAITING ROOM	CPT		CPT-2	VWB		VWB-1	GWB	VWC-1 VWC-2		GWB	VWC-1 VWC-2		GWB	VWC-1 VWC-2		GWB	VWC-1 VWC-2		ACT-1			3048	6
106	WAITING AREA	VCT		VCT-1,2,3	VWB		VWB-1	GWB	VWC-1 VWC-2		GWB	VWC-1 VWC-2		GWB	VWC-1 VWC-2		GWB	VWC-1 VWC-2		ACT-1			3048	6
106A	CORRIDOR	VCT		VCT-1,2,3	VWB		VWB-1	IR GWB	VWC-1 VWC-2		IR GWB	VWC-1 VWC-2		IR GWB	VWC-1 VWC-2		IR GWB	VWC-1 VWC-2		ACT-1			2438	5, 6
107	AIR FORCE	CPT		CPT-2	VWB		VWB-1	GWB	VWC-1		GWB	VWC-1		GWB	VWC-1		GWB	VWC-1		ACT-1			2743	
108	ARMY	CPT		CPT-2	VWB		VWB-1	GWB	VWC-1		GWB	VWC-1		GWB	VWC-1		GWB	VWC-1		ACT-1			2743	
109	SECURITY INTERVIEW	CPT		CPT-2	VWB		VWB-1	GWB	VWC-1		GWB	VWC-1		GWB	VWC-1		GWB	VWC-1		ACT-1			2743	
110	NAVY	CPT		CPT-2	VWB		VWB-1	GWB	VWC-1		GWB	VWC-1		GWB	VWC-1		GWB	VWC-1		ACT-1			2743	
111	NAVY ADVANCE PLACEMENT TEST ROOM	CPT		CPT-2	VWB		VWB-1	GWB	VWC-1		GWB	VWC-1		GWB	VWC-1		GWB	VWC-1		ACT-2			2743	
112	COAST GUARD	CPT		CPT-2	VWB		VWB-1	GWB	VWC-1		GWB	VWC-1		GWB	VWC-1		GWB	VWC-1		ACT-1			2743	
113	WOMEN'S TOILET	CMT		CMT-2	CMT		CMT-2	WR GWB	CMT-1,2,3 PT-1		WR GWB	CMT-1,2,3 PT-1		WR GWB	CMT-1,2,3 PT-1		WR GWB	CMT-1,2,3 PT-1		WR GWB	PT-2		2438	3, 4
114	MEN'S TOILET	CMT		CMT-2	CMT		CMT-2	WR GWB	CMT-1,2,3 PT-1		WR GWB	CMT-1,2,3 PT-1		WR GWB	CMT-1,2,3 PT-1		WR GWB	CMT-1,2,3 PT-1		WR GWB	PT-2		2438	3, 4
115	NATIONAL GUARD	CPT		CPT-2	VWB		VWB-1	GWB	VWC-1		GWB	VWC-1		GWB	VWC-1		GWB	VWC-1		ACT-1			2743	
116	MARINE CORPS.	CPT		CPT-2	VWB		VWB-1	GWB	VWC-1		GWB	VWC-1		GWB	VWC-1		GWB	VWC-1		ACT-1			2743	
117	ELECTRICAL CLOSET	VCT		VCT-2	VWB		VWB-1	GWB	PT-1		GWB	PT-1		GWB	PT-1		GWB	PT-1		GWB	PT-2		2438	
118	GAME ROOM	VCT		VCT-1,2,3	VWB		VWB-1	IR GWB	VWC-1		IR GWB	VWC-1		IR GWB	VWC-1		IR GWB	VWC-1		ACT-1			2743	5
119	FILES ROOM	CPT		CPT-2	VWB		VWB-1	GWB	VWC-1		GWB	VWC-1		GWB	VWC-1		GWB	VWC-1		ACT-1			2743	
120	COPY / PACKET BREAKDOWN ROOM	CPT		CPT-2	VWB		VWB-1	GWB	VWC-1		GWB	VWC-1		GWB	VWC-1		GWB	VWC-1		ACT-1			2743	
121	CORRIDOR	VCT		VCT-1,2,3	VWB		VWB-1	IR GWB	VWC-1 VWC-2		IR GWB	VWC-1 VWC-2		IR GWB	VWC-1 VWC-2		IR GWB	VWC-1 VWC-2		ACT-1			2438	5, 6
121A	CORRIDOR	VCT		VCT-1,2,3	VWB		VWB-1	IR GWB	VWC-1 VWC-2		IR GWB	VWC-1 VWC-2		IR GWB	VWC-1 VWC-2		IR GWB	VWC-1 VWC-2		ACT-1			2438	5, 6
121B	CORRIDOR	VCT		VCT-1,2,3	VWB		VWB-1	IR GWB	VWC-1 VWC-2		IR GWB	VWC-1 VWC-2		IR GWB	VWC-1 VWC-2		IR GWB	VWC-1 VWC-2		ACT-1			2438	5, 6
122	OPERATIONS ADMINISTRATION	CPT		CPT-2	VWB		VWB-1	GWB	VWC-1		GWB	VWC-1		GWB	VWC-1		GWB	VWC-1		ACT-1			2743	
123	PROCESSING NCO	CPT		CPT-1	VWB		VWB-1	GWB	VWC-1		GWB	VWC-1		GWB	VWC-1		GWB	VWC-1		ACT-1			2743	
124	OPERATIONS OFFICER	CPT		CPT-1	VWB		VWB-1	GWB	VWC-1		GWB	VWC-1		GWB	VWC-1		GWB	VWC-1		ACT-1			2743	
125	TRAVEL AGENCY	CPT		CPT-1	VWB		VWB-1	GWB	VWC-1		GWB	VWC-1		GWB	VWC-1		GWB	VWC-1		ACT-1			2743	
126	SYSTEMS ADMINISTRATOR	CPT		CPT-1	VWB		VWB-1	GWB	VWC-1		GWB	VWC-1		GWB	VWC-1		GWB	VWC-1		ACT-1			2743	
127	MIRS/ COMMUNICATION	VCT		VCT-2	VWB		VWB-1	GWB	PT-1		GWB	PT-1		GWB	PT-1		GWB	PT-1		ACT-1			2743	
128	CONFERENCE ROOM	CPT		CPT-1	VWB		VWB-1	GWB	VWC-1 VWC-3		GWB	VWC-1 VWC-3		GWB	VWC-1 VWC-3		GWB	VWC-1 VWC-3		ACT-2			2743	6
129	HEADQUARTERS ADMINISTRATION	CPT		CPT-2	VWB		VWB-1	GWB	VWC-1		GWB	VWC-1		GWB	VWC-1		GWB	VWC-1		ACT-1			2743	
130	BUDGET TECHNICIAN	CPT		CPT-1	VWB		VWB-1	GWB	VWC-1		GWB	VWC-1		GWB	VWC-1		GWB	VWC-1		ACT-1			2743	
131	COMMANDER	CPT		CPT-1	VWB		VWB-1	GWB	VWC-1 VWC-3		GWB	VWC-1 VWC-3		GWB	VWC-1 VWC-3		GWB	VWC-1 VWC-3		ACT-1			2743	6
132	STATION NCO	CPT		CPT-1	VWB		VWB-1	GWB	VWC-1		GWB	VWC-1		GWB	VWC-1		GWB	VWC-1		ACT-1			2743	
133	MEN'S TOILET	CMT		CMT-1,2,3	CMT		CMT-2	WR GWB	CT-1,2,3 PT-1		WR GWB	CT-1,2,3 PT-1		WR GWB	CT-1,2,3 PT-1		WR GWB	CT-1,2,3 PT-1		WR GWB	PT-2		2438	3, 4
134	WOMEN'S TOILET	CMT		CMT-1,2,3	CMT		CMT-2	WR GWB	CT-1,2,3 PT-1		WR GWB	CT-1,2,3 PT-1		WR GWB	CT-1,2,3 PT-1		WR GWB	CT-1,2,3 PT-1		WR GWB	PT-2		2438	3, 4
135	MAIL ROOM	VCT		VCT-2	VWB		VWB-1	GWB	PT-1		GWB	PT-1		GWB	PT-1		GWB	PT-1		GWB	PT-2		2438	
136	STAFF LOUNGE	VCT		VCT-1,2,3	VWB		VWB-1	GWB	VWC-1 PT-1		GWB	VWC-1 PT-1		GWB	VWC-1 PT-1		GWB	VWC-1 PT-1		ACT-1			2743	6
137	SUPPLY STORAGE ROOM	VCT		VCT-2	VWB		VWB-1	GWB	PT-1		GWB	PT-1		GWB	PT-1		GWB	PT-1		ACT-1			2743	
138	ELECTRICAL ROOM	SEAL. CONC.						CMU	PT-1		CMU	PT-1		CMU	PT-1		CMU	PT-1		EXP STR				
139	MECHANICAL ROOM	SEAL. CONC.						CMU	PT-1		CMU	PT-1		CMU	PT-1		CMU	PT-1		EXP STR				
140	SECURE TEST STORAGE & SCORING	VCT		VCT-2	VWB		VWB-1	GWB	PT-1		GWB	PT-1		GWB	PT-1		GWB	PT-1		ACT-1			2743	
141	ASVAB STORAGE ROOM	VCT		VCT-2	VWB		VWB-1	GWB	PT-1		GWB	PT-1		GWB	PT-1		GWB	PT-1		ACT-1			2743	
142	TEST COORDINATOR EDUCATION SERVICES SPECIALIST	CPT		CPT-1	VWB		VWB-1	GWB	VWC-1		GWB	VWC-1		GWB	VWC-1		GWB	VWC-1		ACT-1			2743	
143	TESTING ADMINISTRATION	CPT		CPT-2	VWB		VWB-1	GWB	VWC-1		GWB	VWC-1		GWB	VWC-1		GWB	VWC-1		ACT-1			2743	
144	TEST CONTROL OFFICER	CPT		CPT-1	VWB		VWB-1	GWB	VWC-1		GWB	VWC-1		GWB	VWC-1		GWB	VWC-1		ACT-1			2743	
145	CAT-ASVAB TEST ROOM	CPT		CPT-2	VWB		VWB-1	GWB	VWC-1		GWB	VWC-1		GWB	VWC-1		GWB	VWC-1		ACT-2			2743	
146	TEST ROOM	CPT		CPT-2	VWB		VWB-1	GWB	VWC-1		GWB	VWC-1		GWB	VWC-1		GWB	VWC-1		ACT-2			2743	
147	TEST ROOM	CPT		CPT-2	VWB		VWB-1	GWB	VWC-1		GWB	VWC-1		GWB	VWC-1		GWB	VWC-1		ACT-2			2743	
148	FOOD STORAGE	VCT		VCT-2	VWB		VWB-1	GWB	PT-1		GWB	PT-1		GWB	PT-1		GWB	PT-1		GWB	PT-2		2438	
149	FOOD PREPARATION AREA	PPT	NON-SLIP	PPT-2,3	PPT	NON-SLIP	PPT-2	GWB	PT-1		WR GWB	PT-1		GWB	PT-1		GWB	PT-1		GWB	PT-2		2438	4, 11
150	APPLICANT DINING	PPT	POLISHED	PPT-1,2,3	PPT	POLISHED	PPT-1,2	IR GWB	VWC-1 VWC-2		IR GWB	VWC-1 VWC-2		IR GWB	VWC-1 VWC-2		IR GWB	VWC-1 VWC-2		ACT-1			3657	5, 6, 11
151	MEDICAL BRIEFING	CPT		CPT-2	VWB		VWB-1	GWB	VWC-1 VWC-3		GWB	VWC-1 VWC-3		GWB	VWC-1 VWC-3		GWB	VWC-1 VWC-3		ACT-1			2743	6
152	WAITING AREA	VCT		VCT-1,2,3	VWB		VWB-1	GWB	VWC-1 VWC-2		GWB	VWC-1 VWC-2		GWB	VWC-1 VWC-2		GWB	VWC-1 VWC-2		ACT-1			3048	6
152A	CORRIDOR	VCT		VCT-1,2,3	VWB		VWB-1	IR GWB	VWC-1 VWC-2		IR GWB	VWC-1 VWC-2		IR GWB	VWC-1 VWC-2		IR GWB	VWC-1 VWC-2		ACT-1			2438	5, 6
153	MALE ORTHO	VCT		VCT-1,2,3	VWB		VWB-1	GWB	VWC-1		GWB	VWC-1		GWB	VWC-1		GWB	VWC-1		ACT-1			3048	
154	CHIEF MEDICAL OFFICER	VCT		VCT-1,2,3	VWB		VWB-1	GWB	VWC-1		GWB	VWC-1		GWB	VWC-1		GWB	VWC-1		ACT-1			2743	
155	EXAM ROOM	VCT		VCT-1,2,3	VWB		VWB-1	GWB	VWC-1		GWB	VWC-1		GWB	VWC-1		GWB	VWC-1		ACT-1			2743	
156	MALE URINALYSIS	CMT		CMT-2	CMT		CMT-2	WR GWB	CT-1,2,3 PT-1		WR GWB	CT-1,2,3 PT-1		WR GWB	CT-1,2,3 PT-1		WR GWB	CT-1,2,3 PT-1		WR GWB	PT-2		2438	3, 4
157	EXAM ROOM	VCT		VCT-1,2,3	VWB		VWB-1	GWB	VWC-1		GWB	VWC-1		GWB	VWC-1		GWB	VWC-1		ACT-1			2743	
158	EXAM ROOM	VCT		VCT-1,2,3	VWB		VWB-1	GWB	VWC-1		GWB	VWC-1		GWB	VWC-1		GWB	VWC-1		ACT-1			2743	
159	LABORATORY	VCT		VCT-1	VWB		VWB-1	GWB	VWC-1		GWB	VWC-1		GWB	VWC-1		WR GWB	VWC-1		ACT-1			2743	4
159A	SEROLOGY	VCT		VCT-1	VWB		VWB-1	GWB	VWC-1		GWB	VWC-1		GWB	VWC-1					ACT-1			2743	10
159B	SEROLOGY	VCT		VCT-1	VWB		VWB-1	GWB	VWC-1		GWB	VWC-1					GWB	VWC-1		ACT-1			2743	10
160	EKG / COT ROOM	VCT		VCT-1,2,3	VWB		VWB-1	GWB	VWC-1		GWB	VWC-1		GWB	VWC-1		GWB	VWC-1		ACT-1			2743	
161	MEDICAL STORAGE ROOM	VCT		VCT-2	VWB		VWB-1	GWB	PT-1		GWB	PT-1		GWB	PT-1		GWB	PT-1		ACT-1			2438	
162	FEMALE UNRINALYSIS	CMT		CMT-2	CMT		CMT-2	WR GWB	CT-1,2,3 PT-1		WR GWB	CT-1,2,3 PT-1		WR GWB	CT-1,2,3 PT-1		WR GWB	CT-1,2,3 PT-1		WR GWB	PT-2		2438	3, 4
163	FEMALE WAITING AREA	VCT		VCT-1,2,3	VWB		VWB-1	IR GWB	VWC-1 VWC-2		IR GWB	VWC-1 VWC-2		IR GWB	VWC-1 VWC-2		IR GWB	VWC-1 VWC-2		ACT-1			2438	5, 6
164	EXAM ROOM	VCT		VCT-1,2,3	VWB		VWB-1	GWB	VWC-1		GWB	VWC-1		GWB	VWC-1		GWB	VWC-1		ACT-1			2743	
165	FEMALE ORTHO	VCT		VCT-1,2,3	VWB		VWB-1	GWB	VWC-1		GWB	VWC-1		GWB	VWC-1		GWB	VWC-1		ACT-1			3048	
166	AUDIO ROOM	VCT		VCT-1,2,3	VWB		VWB-1	GWB	VWC-1		GWB	VWC-1		GWB	VWC-1		GWB	VWC-1		ACT-1			3048	
167	VISION TEST ROOM	VCT		VCT-1,2,3	VWB		VWB-1	GWB	VWC-1		GWB	VWC-1		GWB	VWC-1		GWB	VWC-1		ACT-1			2743	
168	MEDICAL ADMINISTRATION	VCT		VCT-1,2,3	VWB		VWB-1	GWB	VWC-1		GWB	VWC-1		GWB	VWC-1		GWB	VWC-1		ACT-1			3048	
169	MEDICAL NCO	CPT		CPT-1	VWB		VWB-1	GWB	VWC-1		GWB	VWC-1		GWB	VWC-1		GWB	VWC-1		ACT-1			2743	
170	ELECTRICAL CLOSET	VCT		VCT-2	VWB		VWB-1	GWB	PT-1		GWB	PT-1		GWB	PT-1		GWB	PT-1		GWB	PT-2		2438	
171	JANITORS CLOSET	VCT		VCT-2	VWB		VWB-1	GWB	PT-1		GWB	PT-1		GWB	PT-1		GWB	PT-1		GWB	PT-2		2438	
172	WOMEN'S TOILET	CMT		CMT-1,2,3	CMT		CMT-2	WR GWB	CT-1,2,3 PT-1		WR GWB	CT-1,2,3 PT-1		WR GWB	CT-1,2,3 PT-1		WR GWB	CT-1,2,3 PT-1		WR GWB	PT-2		2438	3, 4
173	MEN'S TOILET	CMT		CMT-1,2,3	CMT		CMT-2	WR GWB	CT-1,2,3 PT-1		WR GWB	CT-1,2,3 PT-1		WR GWB	CT-1,2,3 PT-1		WR GWB	CT-1,2,3 PT-1		WR GWB	PT-2		2438	3, 4
174	BAGGAGE ROOM	VCT		VCT-1,2,3	VWB		VWB-1	GWB	PT-1		GWB	PT-1		GWB	PT-1		GWB	PT-1		ACT-1			2743	
	EXTERIOR FRONT ENTRANCE WALKWAY	SC																						
	EXTERIOR DINING PATIO	PST		PST-1 PST-2																				

MATERIALS SCHEDULE

FINISH	MATERIAL MANUFACTURER	PATTERN / COLLECTION	COLOR	NOTES
PPT-1	CROSSVILLE, INC.	CROSS-COLORS	A238 SHETLAND	300x300mm TILE
PPT-2	CROSSVILLE, INC.	CROSS-COLORS	A850 GRAPHITE	300x300mm TILE
PPT-3	CROSSVILLE, INC.	CROSS-COLORS	A585 SEAMIST	300x300mm TILE
VCT-1	ARMSTRONG	EXCELON, STONETEX	52143 SANDSTONE TAN	300x300mm TILE
VCT-2	ARMSTRONG	EXCELON, STONETEX	52147 PUMICE STONE	300x300mm TILE
VCT-3	ARMSTRONG	EXCELON, STONETEX	52125 GRANITE GRAY	300x300mm TILE
CPT-1	CAMBRIDGE COMMERCIAL CARPETS	ROUTE 66, EXIT 36	46632 GRANITE PEAK	DENSE CUT PILE, BROADLOOM, 3600mm
CPT-2	BOLYU CONTRACT	MONTREUX	MTX55 GALAXY	TEXTURED LOOP, BROADLOOM 3600mm
CPT-3	BOLYU CONTRACT	LA CROIX	SM488 BLUE RAPSODY	DENSE CUT PILE, BROADLOOM, 3600mm
CT-1	CROSSVILLE, INC.	CROSS COLORS	B120 PAECH FRESCO	150x150mm TILE
CT-2	CROSSVILLE, INC.	CROSS COLORS	A233 SAND BISQUE	150x150mm TILE
CT-3	CROSSVILLE, INC.	CROSS COLORS	B580 OCEANA	150x150mm TILE
CMT-1	CROSSVILLE, INC.	CROSS COLORS MOSAICS	A120 PEACH FRESCO	75x75mm TILE
CMT-2	CROSSVILLE, INC.	CROSS COLORS MOSAICS	A233 SAND BISQUE	75x75mm TILE
CMT-3	CROSSVILLE, INC.	CROSS COLORS MOSAICS	A580 OCEANA	75x75mm TILE
PST-1	CROSSVILLE, INC.	AURORA XT SERIES	AV82XT METEOR	460x460mm TILE
PST-2	CROSSVILLE, INC.	AURORA XT SERIES	AV81XT STELLAR	460x460mm TILE
VWC-1	WOLF GORDON	MONREALE SORELLA	WG 3774792	54 In. WIDTH, TYPE II
VWC-2	WOLF GORDON	LYONNAISE MARSEILLE	G 3811514	54 In. WIDTH, TYPE II
VWC-3	WOLF GORDON	LYONNAISE TOULON	G 3811515	54 In. WIDTH, TYPE II
PT-1	BENJAMIN MOORE	INTERIOR READY-MIXED COLORS	BONE WHITE	
PT-2	BENJAMIN MOORE	INTERIOR READY-MIXED COLORS	WHITE	
PT-3	BENJAMIN MOORE	INTERIOR READY-MIXED COLORS	BLACK	
ACT-1	ARMSTRONG	FINE FISSURED 1728M	WHITE (WH)	600x600x15mm, SQUARE LAY-IN
ACT-2	ARMSTRONG	FINE FISSURED OPEN PLAN 1756M	WHITE (WH)	600x600x19mm, ANGLED TEGULAR
VWB-1	ARMSTRONG	COLOR-INTERGRATED VINYL	61 GRAPHITE GRAY	
PLAM-1	WILSONART LAMINATE	STANDARDS COLLECTION	10745-60 FONTHILL PEAR	
PLAM-2	WILSONART LAMINATE	TOPAZ COLLECTION	4589-07 SMOKEY TOPAZ	
SSM-1	WILSONART SOLID SURFACE	GIBRALTAR COLLECTION (RICH)	9091-ML MIDNIGHT MELANGE	
SSM-2	WILSONART SOLID SURFACE	GIBRALTAR COLLECTION (RICH)	9033-ML CARMEL MELANGE	
WST-1	MINWAX		223 COLONIAL MAPLE	
EM-1	C/S GROUP	PEDIGRID (GI)	9322 SLATE (CP)	
CG-1	AFCO-USA	ELECTRA CG-2144	148 DESERT SAND	
GT-1	MAPEI	KERAPROXY	02 PEWTER	MAIN LOBBY/ APPLICANT DINING AREA
GT-2	MAPEI	ULTRACOLOR	39 IVORY	ALL TOILET ROOMS / LOCKER ROOMS
D-1	DEC-ART DESIGNS INC.		1118 NAVY	100% COTTON VELOUR

NOTES

1. RECESSED ENTRY MAT (EM) REQUIRED.
2. NOT USED
3. 1800mm CERAMIC TILE WAINSCOT REQUIRED.
4. WATER RESISTENT GYPSUM WALL BOARD SHALL BE UTILIZED AT WALLS AND / OR CEILINGS WERE SPECIFIED.
5. IMPACT RESISTENT GYPSUM WALL BOARD SHALL BE UTILIZED ON WALLS WERE SPECIFIED.
6. A HARDWOOD CHAIR RAIL, STAINED TO MATCH WOOD DOORS, SHALL BE INSTALLED AT 863mm ABOVE FINISHED FLOOR, WHERE SPECIFIED.
7. VINYL CORNER GUARDS SHALL BE INSTALLED ON ALL EXTERIOR CORNERS AT VINYL WALL COVERING AS INDICATED ON DRAWING A-104.
8. ALL WOOD VENEER PANELLING AND MOLDING SHALL BE STAINED.
9. NOT USED
10. INSTALL TOILET PARTITION BETWEEN SERELOGY AREAS 159A AND 159B.
11. PORCELAIN PAVER TILE (PPT) WALL BASE AT LOBBY AREAS AND APPLICANT DINING ROOM SHALL BE COVE STYLE.

GENERAL NOTE:

ALL MAUFACTURER'S COLORS, PATTERNS & TYPE INDICATED ARE FOR REFERENCE PURPOSES ONLY. THE REFERENCES ARE USED TO INDICATE THE INTENDED TYPE, DETAIL, COLOR AND PATTERN. IT IS NOT INTENDED TO LIMIT THE SELECTION OF OTHER MANUFACTURERS PRODUCTS OF SIMILAR TYPE, DETAIL, COLOR, & PATTERN.

ABBREVIATIONS

GWB	GYPSUM WALL BOARD
CMU	CONCRETE MASONRY UNIT
BR	BRICK
MT	METAL
ALUM	ALUMINUM
GL	GLASS
ACT	ACOUSTICAL CEILING TILE
EXP	EXPOSED
SEAL CONC	SEALED CONCRETE
CT	CERAMIC TILE
GT	GROUT
VCT	VINYL COMPOSITION TILE
CPT	CARPET
CMT	CERAMIC MOSAIC TILE
CONC	CONCRETE
WR	WATER RESISTANT
FR	FIRE RATED
WD	WOOD
STR	STRUCTURE
EM	ENTRY MAT
PT	PAINT
IR	IMPACT RESISTANT
PPT	PORCELAIN PAVER TILE
VWB	VINYL WALL BASE
PLAM	PLASTIC LAMINATE
WST	WOOD STAIN
CG	CORNER GUARD
SSM	SOLID SUFSACE MATERIAL
PST	PORCELAIN STONE TILE
SC	STAMPED CONCRETE
D	DRAPERY
VWC	VINYL WALLCOVERING

US Army Corps of Engineers
New York District

Symbol	Description	Date	Appr.
30%	SUBMISSION	060204	

U.S. ARMY ENGINEER DISTRICT
CORPS OF ENGINEERS
NEW YORK, NEW YORK

Designed by: | Date: | Size: | Rev.:
Dwn by: | Ckd by: | Drawing file no.:
Reviewed by: | Drawing code:
Submitted by: | Plot date: 19-NOV-2004 15:49 | Plot by: e3jehmwe | Scale: 50.000000:1.000000
File name: S:\Nerocm\military\Niagara Fall AFB\MEPS\Architectural\30% Design\PRINTS\A-600.dgn

PN 59873
MILITARY ENTRANCE PROCESSING STATION (MEPS)
NIAGARA FALLS, NY

FINISH SCHEUDLE

Sheet reference number: A-600

DOOR SCHEDULE

ROOM	DOOR NO.	ELEV.	MAT'L.	SIZE W	SIZE H	SIZE T	GLASS TYPE	FIRE RATED	FRAME ELEV.	FRAME MAT'L.	HEAD	JAMB	SILL	FRAME FIRE RATED	HDW SET NO.	REMARKS
VESTIBULE	101	D	ALUM	2 @ 914	2133	45	G8		D	ALUM	H1	J1	S1		HW12	
MAIN LOBBY	102	D	ALUM	2 @ 914	2133	45	G7		D	ALUM	H5	J3	—		HW12	
BRIEFING ROOM	103	F	WD	914	2133	45	—		E	HM	H3	J3	S4		HW1	
CEREMONY ROOM	103A	F	WD	914	2133	45	—		C	HM	H3	J3	—		HW13	
CEREMONY ROOM	104	E	ALUM	914	2133	45	G2		F	ALUM	H3	J3	S4		HW13	SEE WINDOW SCHEDULE DWG. A-604
VISITORS WAITING ROOM	105	E	ALUM	914	2133	45	G2		F	ALUM	H3	J3	S4		HW13	SEE WINDOW SCHEDULE DWG. A-604
WAITING AREA	106	D	ALUM	2 @ 914	2133	45	G2		G	ALUM	H3	J3	S5		HW11	
CORRIDOR	106A	A	HM	914	2133	45	G6		A	HM	H1	J1	S3		HW9	
CORRIDOR	106B	A	WD	914	2133	45	G2		C	HM	H3	J3	—		HW7	
AIR FORCE	107	F	WD	914	2133	45	—		E	HM	H3	J3	S4		HW2	
ARMY	108	F	WD	914	2133	45	—		E	HM	H3	J3	S4		HW2	
SECURITY INTERVIEW	109	F	WD	914	2133	45	—		E	HM	H3	J3	—		HW2	
NAVY	110	F	WD	914	2133	45	—		E	HM	H3	J3	S4		HW2	
NAVY ADVANCE PLACEMENT TEST ROOM	111	F	WD	914	2133	45	—		E	HM	H3	J3	—		HW1	
COAST GUARD	112	F	WD	914	2133	45	—		E	HM	H3	J3	S4		HW2	
WOMENS TOILET	113	F	WD	914	2133	45	—		C	HM	H3	J3	S6		HW6	25mm UNDERCUT
MENS TOILET	114	F	WD	914	2133	45	—		C	HM	H3	J3	S6		HW6	25mm UNDERCUT
NATIONAL GUARD	115	F	WD	914	2133	45	—		E	HM	H3	J3	S4		HW2	
MARINE CORPS.	116	F	WD	914	2133	45	—		E	HM	H3	J3	S4		HW2	
ELECTRICAL CLOSET	117	F	WD	914	2133	45	—		C	HM	H3	J3	—		HW2	25mm UNDERCUT
GAME ROOM	118	E	ALUM	914	2133	45	G2		F	ALUM	H3	J3	S5		HW13	SEE WINDOW SCHEDULE DWG. A-604
FILES ROOM	119	F	WD	914	2133	45	—		E	HM	H3	J3	S4		HW2	
FILES ROOM	119A	F	WD	914	2133	45	—		E	HM	H3	J3	—		HW2	
COPY / PACKET BREAKDOWN ROOM	120	F	WD	914	2133	45	—		E	HM	H3	J3	S4		HW1	
COPY / PACKET BREAKDOWN ROOM	120A	F	WD	914	2133	45	—		E	HM	H3	J3	—		HW1	
CORRIDOR	121	F	WD	914	2133	45	—		E	HM	H3	J3	S5		HW7	
CORRIDOR	121A	F	WD	914	2133	45	—		E	HM	H3	J3	—		HW7	
CORRIDOR	121B	E	ALUM	914	2133	45	G8		A	ALUM	H1	J1	S3		HW9	
OPERATIONS ADMINISTRATION	122	F	WD	914	2133	45	—		E	HM	H3	J3	S4		HW2	
OPERATIONS ADMINISTRATION	122A	A	WD	914	2133	45	G2		E	HM	H3	J3	S4		HW1	
PROCESSING NCO	123	F	WD	914	2133	45	—		E	HM	H3	J3	—		HW2	
OPERATIONS OFFICER	124	F	WD	914	2133	45	—		E	HM	H3	J3	—		HW2	
TRAVEL AGENCY	125	A	WD	914	2133	45	G2		C	HM	H3	J3	—		HW2	
SYSTEMS ADMINISTRATOR	126	F	WD	914	2133	45	—		E	HM	H3	J3	—		HW2	
MIRS/ COMMUNICATION	127	A	WD	914	2133	45	—		C	HM	H3	J3	S4		HW2	
CONFERENCE ROOM	128	F	WD	914	2133	45	—		E	HM	H3	J3	S4		HW2	
CONFERENCE ROOM	128A	F	WD	914	2133	45	—		E	HM	H3	J3	—		HW1	
HEADQUARTERS ADMINISTRATION	129	F	WD	914	2133	45	—		E	HM	H3	J3	S4		HW2	
BUDGET TECHNICIAN	130	F	WD	914	2133	45	—		E	HM	H3	J3	—		HW2	
COMMANDER	131	F	WD	914	2133	45	—		E	HM	H3	J3	—		HW2	
STATION NCO	132	F	WD	914	2133	45	—		E	HM	H3	J3	—		HW2	
MENS TOILET	133	F	WD	914	2133	45	—		C	HM	H3	J3	S6		HW9	25mm UNDERCUT
WOMENS TOILET	134	F	WD	914	2133	45	—		C	HM	H3	J3	S6		HW9	25mm UNDERCUT
MAIL ROOM	135	F	HM	914	2133	45	—		C	HM	H4	J2	—		HW9	
STAFF LOUNGE	136	F	WD	914	2133	45	—		E	HM	H3	J3	—		HW1	
SUPPLY STORAGE ROOM	137	C	WD	914	2133	45	—		C	HM	H3	J3	—		HW9	
SUPPLY STORAGE ROOM	137A	B	HM	2 @ 914	2133	45	—		B	HM	H1	J1	S3		HW5	
ELECTRICAL ROOM	138	B	HM	2 @ 914	2133	45	—		H	HM	H1	J1	S2		HW14	
MECHANICAL ROOM	139	B	HM	2 @ 914	2133	45	—		H	HM	H1	J1	S2		HW14	
SECURE TEST STORAGE & SCORING	140	A	WD	914	2133	45	G2		C	HM	H3	J3	—		HW2	
ASVAB STORAGE ROOM	141	F	WD	914	2133	45	—		C	HM	H3	J3	S4		HW2	25mm UNDERCUT
ASVAB STORAGE ROOM	141A	F	WD	914	2133	45	—		C	HM	H3	J3	S4		HW2	25mm UNDERCUT
TEST COORDINATOR & EDUCATION SERVICES SPECIALIST	142	F	WD	914	2133	45	—		E	HM	H3	J3	S4		HW2	
TESTING ADMINISTRATION	143	C	WD	914	2133	45	—		E	HM	H3	J3	—		HW2	
TEST CONTROL OFFICER	144	F	WD	914	2133	45	—		E	HM	H3	J3	—		HW2	
CAT-ASVAB TEST ROOM	145	A	WD	914	2133	45	G2		C	HM	H3	J3	S4		HW2	
TEST ROOM	146	A	WD	914	2133	45	G2		C	HM	H3	J3	S4		HW2	
TEST ROOM	147	A	WD	914	2133	45	G2		C	HM	H3	J3	—		HW2	
TEST ROOM	147A	A	WD	914	2133	45	G2		C	HM	H3	J3	—		HW2	
FOOD STORAGE	148	F	WD	914	2133	45	—		C	HM	H3	J3	—		HW2	25mm UNDERCUT
FOOD STORAGE	148A	F	WD	914	2133	45	—		C	HM	H3	J3	—		HW2	25mm UNDERCUT
APPLICANT DINING	149	E	ALUM	914	2133	45	G8		F	ALUM	H1	J1	S3		HW10	
APPLICANT DINING	150	D	ALUM	2 @ 914	2133	45	G2		G	ALUM	H3	J3	S5		HW11	
MEDICAL BRIEFING	151	F	WD	914	2133	45	—		E	HM	H3	J3	S4		HW1	
MEDICAL BRIEFING	151A	F	WD	914	2133	45	—		E	HM	H3	J3	S4		HW1	
WAITING AREA	152	D	ALUM	2 @ 914	2133	45	G2		G	ALUM	H3	J3	S5		HW11	
CORRIDOR	152A	A	HM	914	2133	45	G6		A	HM	H1	J1	S3		HW9	
MALE ORTHO	153	F	WD	914	2133	45	—		C	HM	H3	J3	—		HW6	
CHIEF MEDICAL OFFICER	154	F	WD	914	2133	45	—		C	HM	H3	J3	—		HW2	
CHIEF MEDICAL OFFICER	154A	F	WD	914	2133	45	—		C	HM	H3	J3	—		HW6	
EXAM ROOM	155	F	WD	914	2133	45	—		C	HM	H3	J3	—		HW6	
MALE URINALYSIS	156	F	WD	914	2133	45	—		C	HM	H3	J3	S6		HW7	25mm UNDERCUT
EXAM ROOM	157	F	WD	914	2133	45	—		C	HM	H3	J3	—		HW6	
EXAM ROOM	158	F	WD	914	2133	45	—		C	HM	H3	J3	—		HW6	
LABORATORY	159	A	WD	914	2133	45	G2		C	HM	H3	J3	—		HW1	
SEROLOGY	159A	F	WD	914	2133	45	—		C	HM	H3	J3	—		HW1	
SEROLOGY	159B	F	WD	914	2133	45	—		C	HM	H3	J3	—		HW1	
EKG / COT ROOM	160	F	WD	914	2133	45	—		C	HM	H3	J3	—		HW6	
MEDICAL STORAGE ROOM	161	F	WD	914	2133	45	—		C	HM	H3	J3	—		HW2	25mm UNDERCUT
FEMALE UNRINALYSIS	162	F	WD	914	2133	45	—		C	HM	H3	J3	S6		HW7	25mm UNDERCUT
FEMALE WAITING AREA	163	A	WD	914	2133	45	G2		C	HM	H3	J3	—		HW1	
FEMALE WAITING AREA	163A	A	HM	914	2133	45	G6		A	HM	H1	J1	S3		HW9	
EXAM ROOM	164	F	WD	914	2133	45	—		C	HM	H3	J3	—		HW6	
FEMALE ORTHO	165	F	WD	914	2133	45	—		C	HM	H3	J3	—		HW6	
FEMALE ORTHO	165A	F	WD	914	2133	45	—		C	HM	H3	J3	—		HW6	
AUDIO ROOM	166	A	WD	914	2133	45	G2		C	HM	H3	J3	—		HW1	
VISION TEST ROOM	167	A	WD	914	2133	45	G2		C	HM	H3	J3	—		HW1	
MEDICAL ADMINISTRATION	168	F	WD	914	2133	45	—		C	HM	H3	J3	—		HW2	
MEDICAL NCO	169	F	WD	914	2133	45	—		E	HM	H3	J3	S4		HW2	
ELECTRICAL CLOSET	170	F	WD	914	2133	45	—		C	HM	H3	J3	S5		HW2	25mm UNDERCUT
JANITORS CLOSET	171	F	WD	914	2133	45	—		C	HM	H3	J3	S5		HW2	25mm UNDERCUT
FEMALE RESTROOM	172	F	WD	914	2133	45	—		C	HM	H3	J3	S6		HW7	25mm UNDERCUT
MALE RESTROOM	173	F	WD	914	2133	45	—		C	HM	H3	J3	S6		HW7	25mm UNDERCUT
BAGGAGE ROOM	174	F	WD	914	2133	45	—		E	HM	H3	J3	S5		HW2	

DOOR ELEVATIONS

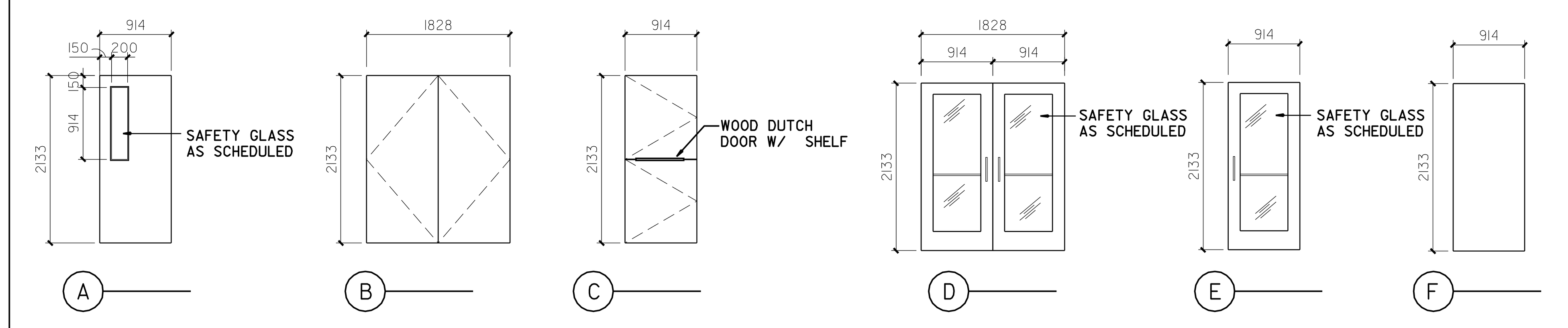

DOOR FRAMES

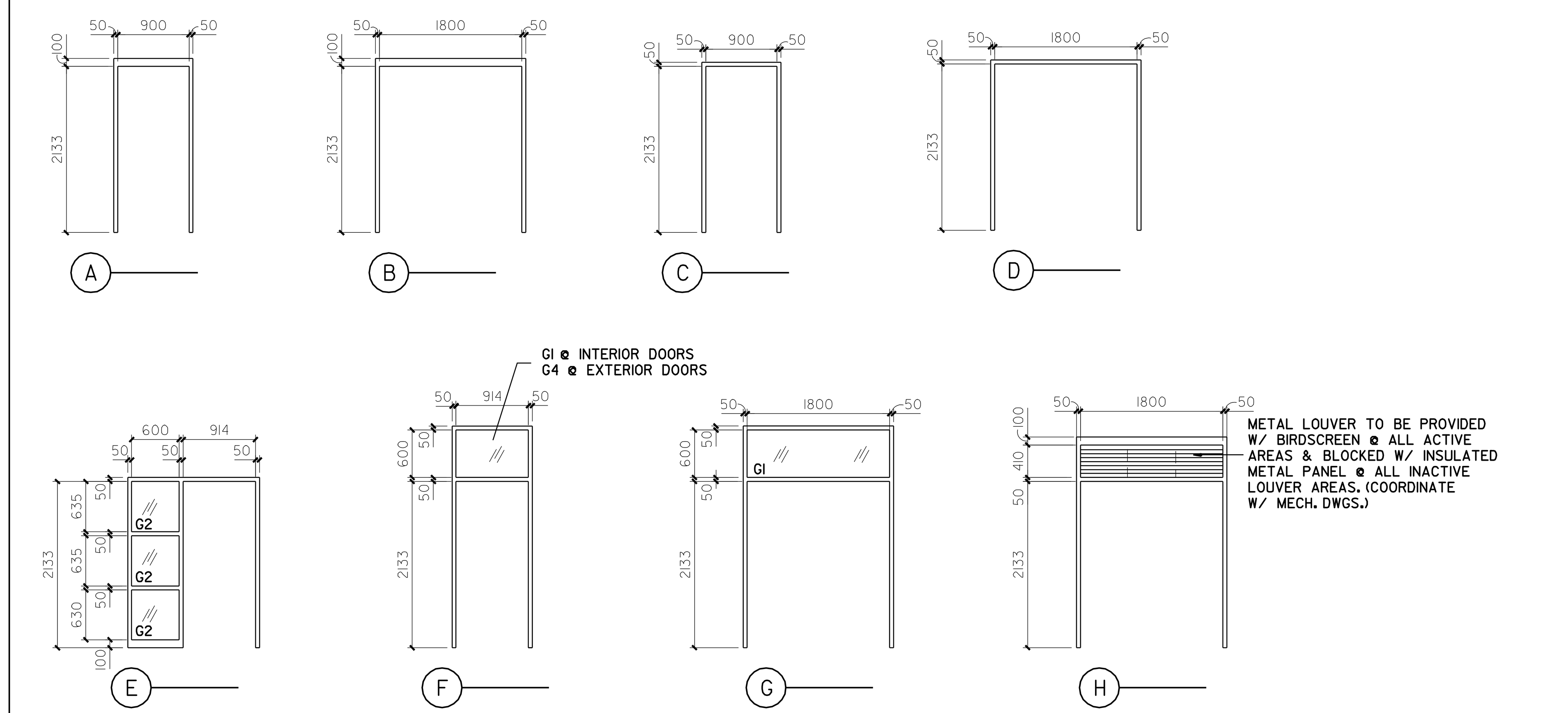

GLASS TYPES

G1 - 6mm PLATE GLASS, CLEAR
G2 - 6mm PLATE GLASS, CLEAR TEMPERED
G3 - 25mm INSULATED, TINTED-TEMPERED, LAMINATED
G4 - 25mm INSULATED TINTED- LAMINATED
G5 - 25mm INSULATED, CLEAR- LAMINATED
G6 - 6mm WIRE GLASS
G7 - 6mm CLEAR LAMINATED
G8 - 6mm TINTED LAMINATED

ABBREVIATIONS

HM	HOLLOW METAL
ALUM	ALUMINUM
MT	METAL
HR	HOUR
WD	SOLID CORE WOOD

NOTES

1. HEAD, JAMB AND SILL DETAILS ARE LOCATED ON DRAWING A-602 AND A-603.

US Army Corps of Engineers
New York District

30% SUBMISSION

U.S. ARMY ENGINEER DISTRICT
CORPS OF ENGINEERS
NEW YORK, NEW YORK

Designed by: | Dwn by: | Ckd by: | Reviewed by: | Submitted by:
Date: | Size: | Rev.: | Drawing file no.: | Drawing code:
Plot date: 19-NOV-2004 15:49
Plot by: e3jetmwe
Scale: 50.000000:1.000000
File name: S:\fileroom\military\Niagara Fall AFB\MEPS\Architectural\30% Design\PRINTS\A-601.dgn

PN 59873
MILITARY ENTRANCE PROCESSING STATION (MEPS)
NIAGARA FALLS, NY

DOOR SCHEDULE

Sheet reference number: A-601

HEAD

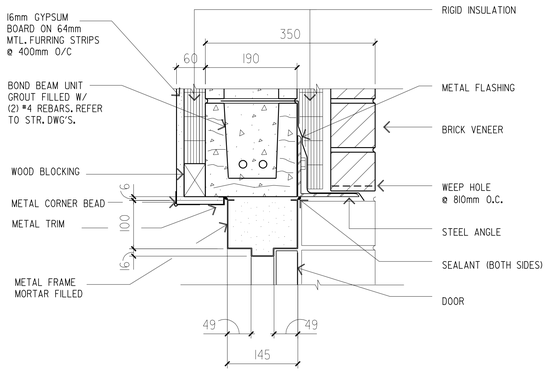

H1

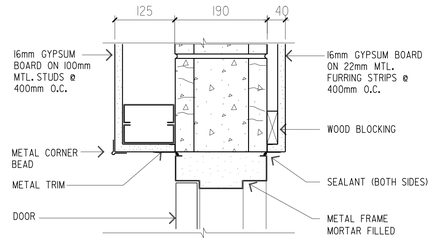

H2

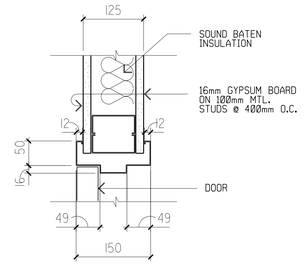

H3

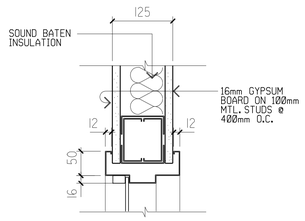

H5

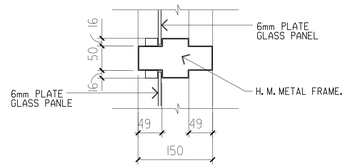

H6

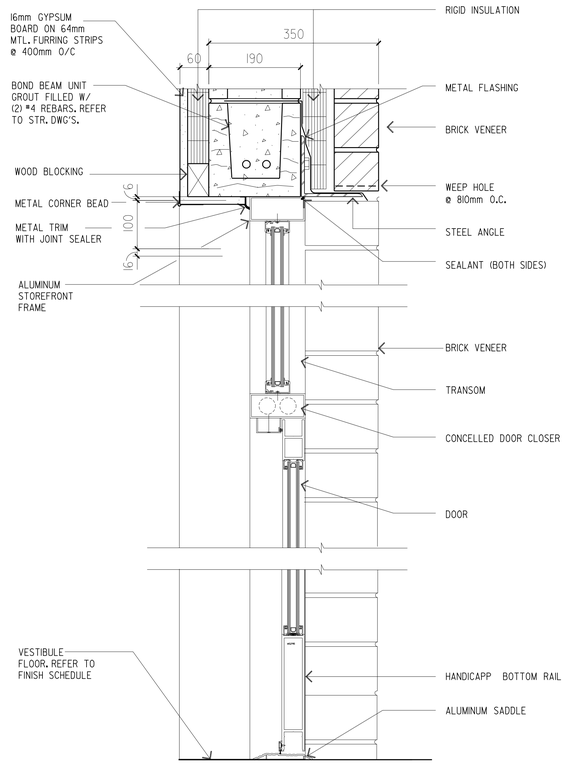

H4

JAMB

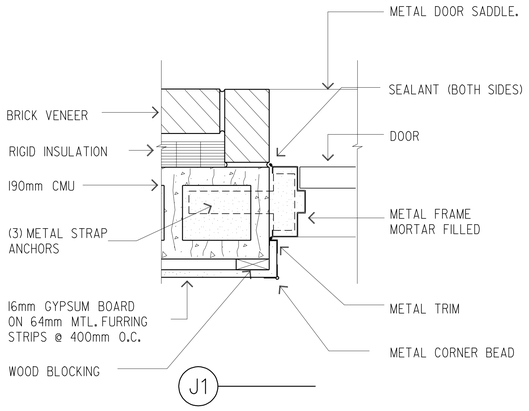

J1

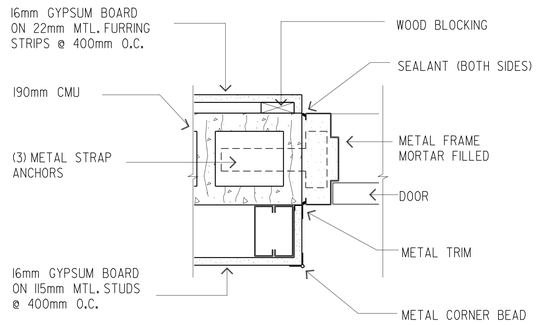

J2

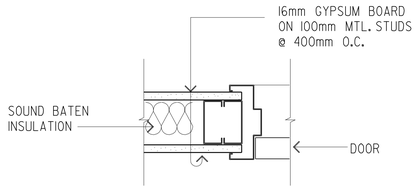

J3

US Army Corps of Engineers
New York District

Symbol	Description	Date	Appr.

U.S. ARMY ENGINEER DISTRICT
CORPS OF ENGINEERS
NEW YORK, NEW YORK

Designed by: | Date: | Size: | Rev.:
Dwn by: | Ckd by: | Drawing file no.:
Reviewed by: | Drawing code:
Submitted by: | Plot date: 19-NOV-2004 15:49 | Plot by: ADMIN | Scale: 0.000000000000
File name: S:\Benson\military\Niagara Falls\MEPS\Architectural\A06_Design(PRINTS)-602.dgn

MILITARY ENTRANCE PROCESSING STATION (MEPS)
NIAGARA FALLS, NY
PN 58873

DOOR DETAILS

Sheet reference number:
A–602

Submitted by: e3jetmee
Saffier-admin\User\philippe\Philippe Fail AFB\MEPS\Architecture\DOOR DETAILS\PRINTS\A-602.dgn
Plot Date: 19-NOV-2004 15:49

SILL

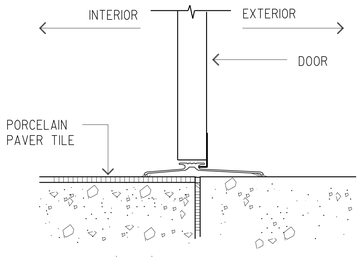

S1

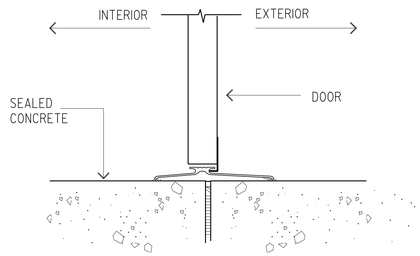

S2

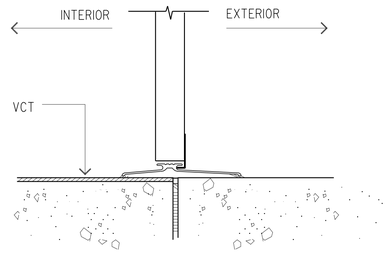

S3

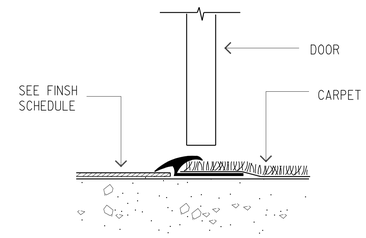

S4

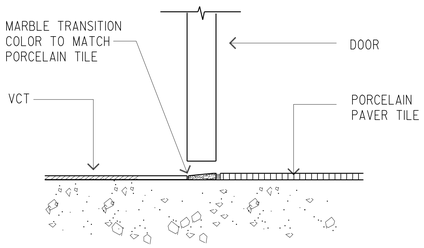

S5

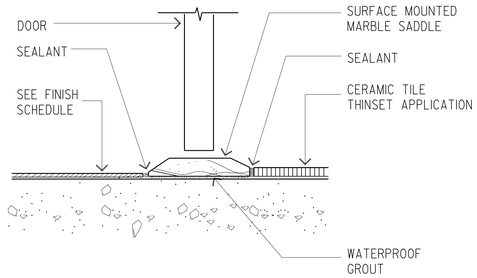

S6

US Army Corps of Engineers
New York District

U.S. ARMY ENGINEER DISTRICT
CORPS OF ENGINEERS
NEW YORK, NEW YORK

PN 56873
MILITARY ENTRANCE PROCESSING STATION (MEPS)
NIAGARA FALLS, NY

DOOR DETAILS

Sheet reference number:
A–603

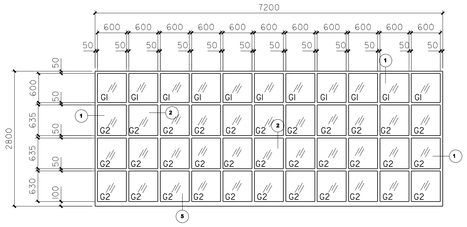

A APPLICANT DINING GLASS WALL ELEVATION

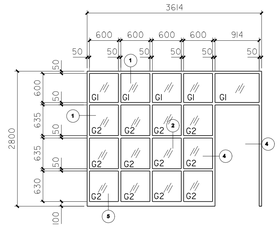

B GAME ROOM VISITORS WAITING ROOM

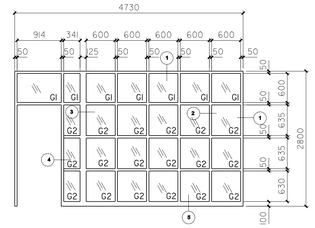

C GLASS WALL ELEVATION AT CEREMONY ROOM

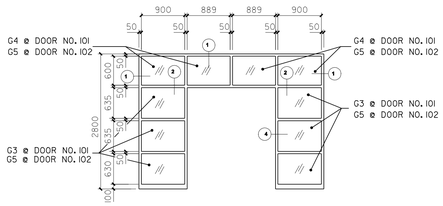

D FRONT ENTRANCE

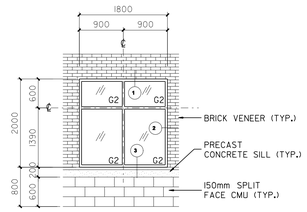

E TYPICAL EXTERIOR WINDOW ELEVATION

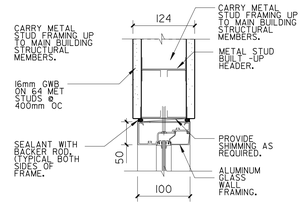

1 HEAD DETAIL

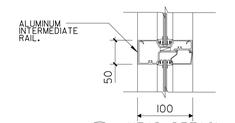

2 HEAD DETAIL

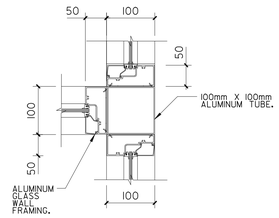

3 PARTITION INTERSECTION

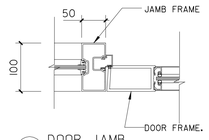

4 DOOR JAMB

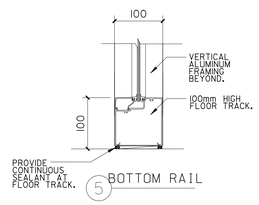

5 BOTTOM RAIL

TYP. INTERIOR WINDOW WALL SECTION.

SCALE 1:50

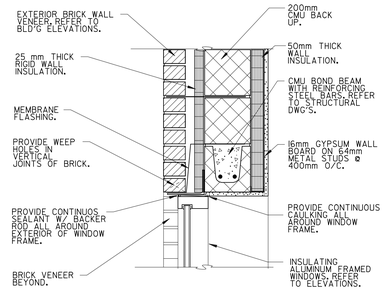

(1 HEAD DETAIL)

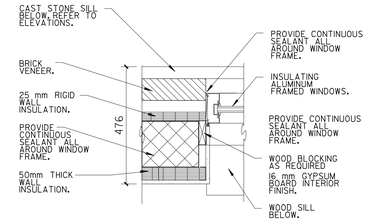

(2 JAMB DETAIL)

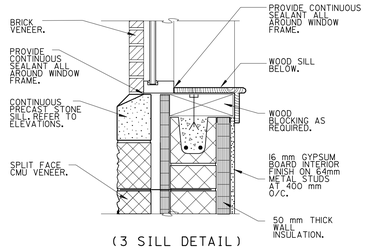

(3 SILL DETAIL)

TYP. EXTERIOR WINDOW WALL SECTIONS.

SCALE 1:50

LOUVER DETAILS

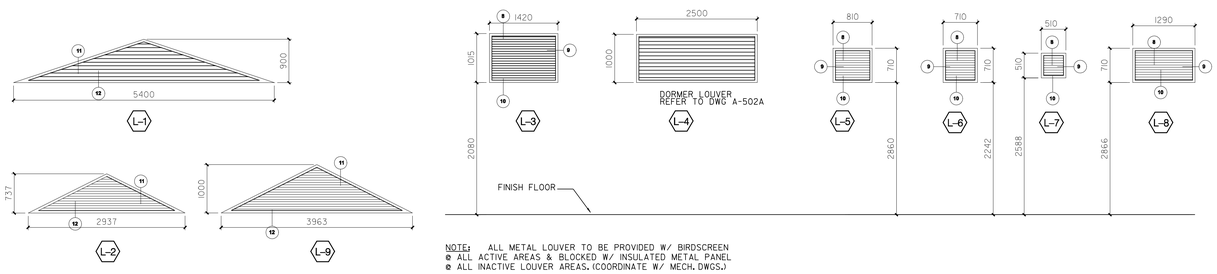

NOTE: ALL METAL LOUVER TO BE PROVIDED W/ BIRDSCREEN @ ALL ACTIVE AREAS & BLOCKED W/ INSULATED METAL PANEL @ ALL INACTIVE LOUVER AREAS. (COORDINATE W/ MECH. DWGS.)

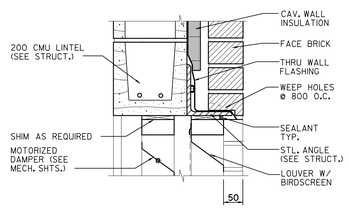

8 LOUVER HEAD DETAIL

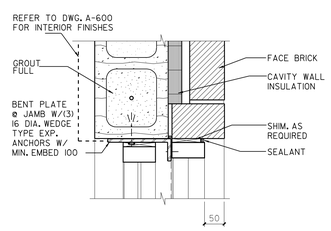

9 LOUVER JAMB DETAIL

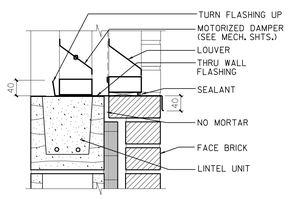

10 LOUVER SILL DETAIL

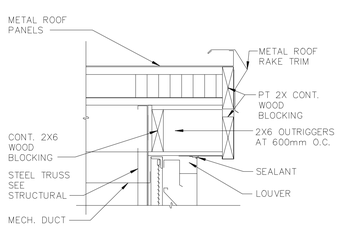

11 HEAD

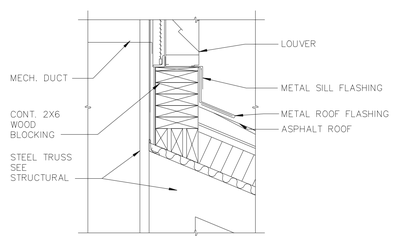

12 SILL

PASS THRU WINDOW DETAILS

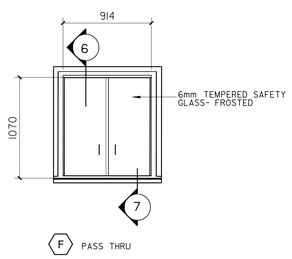

F PASS THRU

ELEVATION

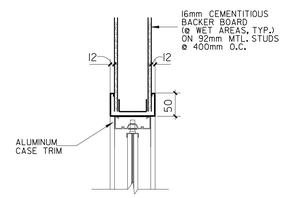

(JAMB DET SIM)
6 HEAD DETAIL

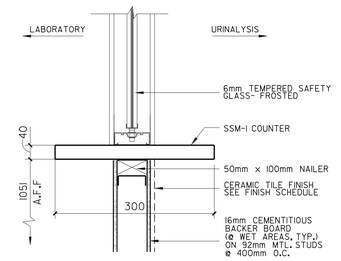

(JAMB DET SIM)
7 SILL DETAIL

US Army Corps of Engineers
New York District

Symbol	Description	Date	App.
30%	SUBMISSION	06/08/04	

Size: Rev:
Date:
Drawing file no.:
Drawing code:
Plot date: 19-NOV-2004 15:50
Plot by: dpenna
File: G:\Division\Hidgns\Hidgns Fall AE\BMEP\Sp\Architecture\A-604.dgn

Designed by:
Dwn by: Ckd by:
Reviewed by:
Submitted by:

U.S. ARMY ENGINEER DISTRICT
CORPS OF ENGINEERS
NEW YORK, NEW YORK

PN 58673
MILITARY ENTRANCE PROCESSING STATION (MEPS)
NIAGARA FALLS, NY

WINDOW & LOUVER DETAILS

Sheet reference number:
A–604

Plot Date: 19-NOV-2004 15:50
Plot By: AE\BMEP\Sp\Architecture\A-604.dgn

Submitted by: e3jamme
G:\Division\Hidgns\Hidgns Fall AE\BMEP\Sp\Architecture\A-604.dgn

WALL PARTITION TYPES

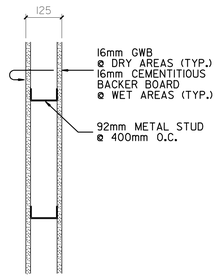

1 GWB PARTITION TYPE

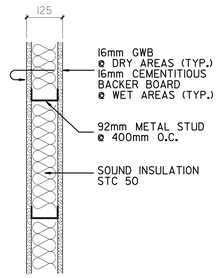

1A GWB PARTITION TYPE W / INSULATION

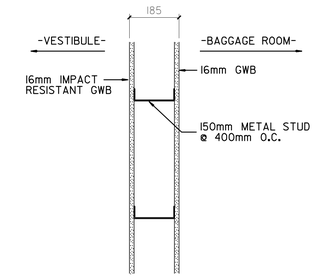

1B GWB PARTITION TYPE

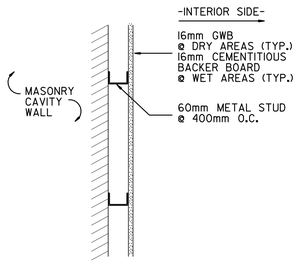

2 PARTITION TYPE

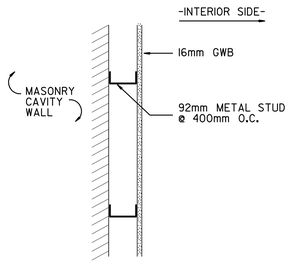

2A PARTITION TYPE

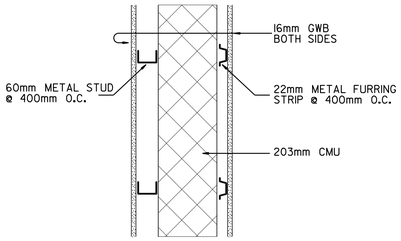

3 CMU PARTITION TYPE

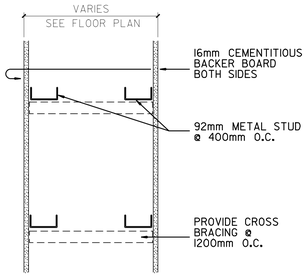

4 PIPE CHASE

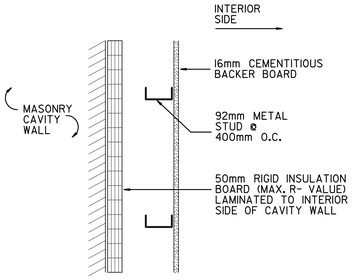

4A PIPE CHASE

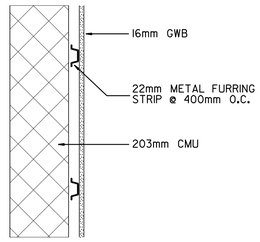

5 CMU PARTITION TYPE

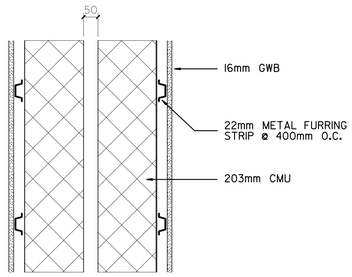

6 CMU PARTITION @ SEISMIC JOINT

LATERAL SUPPORT DETAILS

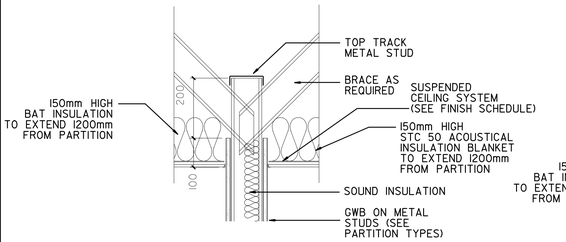

1 A605 LATERAL SUPPORT FOR GWB PARTITION

REFER TO PLAN FOR LOCATION

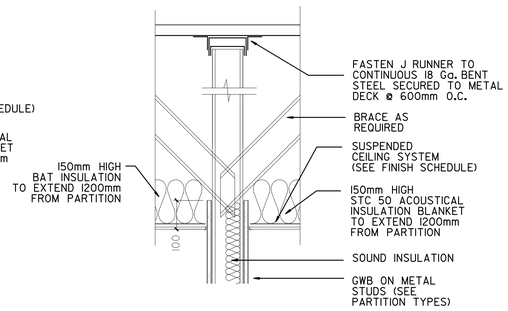

2 A605 LATERAL SUPPORT FOR GWB PARTITION

REFER TO PLAN FOR LOCATION

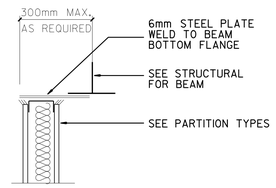

3 A605 LATERAL SUPPORT FOR GWB PARTITION

GENERAL NOTES:

- CARRY GWB TO 100mm ABV CLG (MIN) @ RMS W/ACT TILE CEILINGS.
- CARRY GWB TO CLG LN @ RMS W/GWB CEILINGS.
- METAL STUD CEILING JOISTS SHALL BE ON THE SHORTER SPAN OF ANY ROOM.

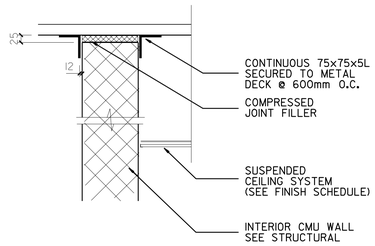

4 A605 LATERAL SUPPORT FOR CMU PARTITION

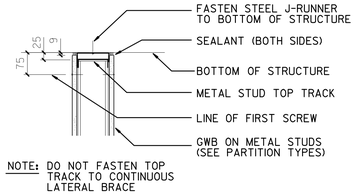

NOTE: DO NOT FASTEN TOP TRACK TO CONTINUOUS LATERAL BRACE

5 A605 TYPICAL TOP RACK

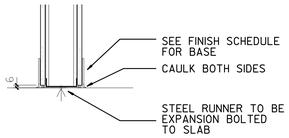

6 A605 TYPICAL BOTTOM RACK

US Army Corps of Engineers
New York District

Rev.	Date	Description	App.
		90% SUBMISSION	ORIGINAL

Designed by: | Size:
Dwn by: | Ckd by: | Date:
Reviewed by: | Drawing file no.:
Submitted by: | Drawing code:
First date: 19-NOV-2004 15:50
Plot by: admcnew
Scale: SO,000000000000

U.S. ARMY ENGINEER DISTRICT
CORPS OF ENGINEERS
NEW YORK, NEW YORK

File name: S:\Services\military\Niagara Falls\AFRS\Architect\A-605.dgn

PN 59873
MILITARY ENTRANCE PROCESSING STATION (MEPS)
NIAGARA FALLS, NY

WALL TYPES
& MISC. DETAILS

Sheet reference number:
A–605

Submitted by: ejlehmee
Saf:Nor:admnilitary:phillipsre Fol: AFBAMEPS:Architect:arch:SL Design:PRINTSA-605.dgn
Plot Date: 19-NOV-2004 15:50

SUSPENDED CEILING DETAILS

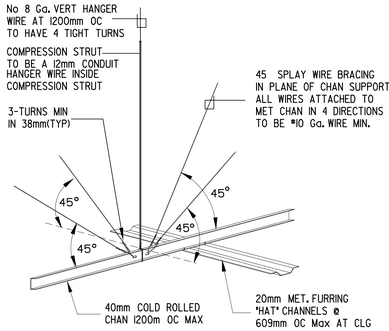

1 A606 GYPSUM BOARD SUSPENDED CEILING

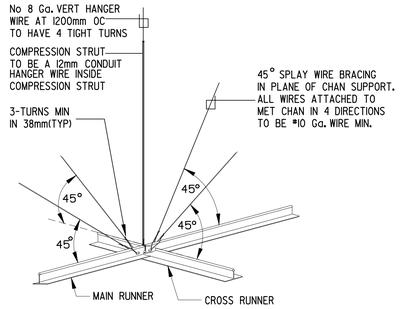

2 A606 ACOUSTICAL TILE SUSPENDED CEILING

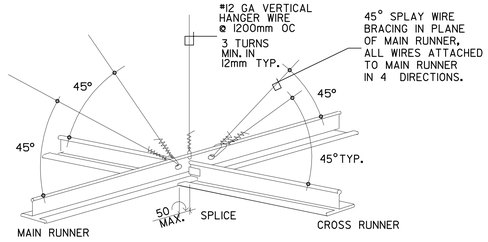

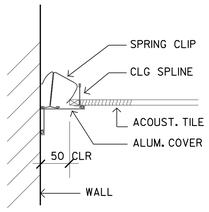

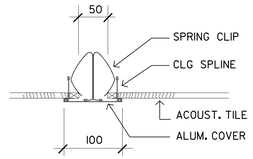

3 A606 SEISMIC CEILING JOINT COVER

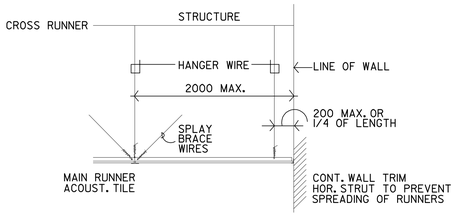

LATERAL DESIGN REQUIREMENTS

1. SUSPENDED CEILINGS SHALL BE LATERALLY BRACED. LIGHT FIXTURES AND OTHER CEILING MOUNTED ITEMS SHALL BE INDIVIDUALLY SUSPENDED AND BRACED.

2. PROVIDE SPLAY BRACING (1) EACH PER 13 SQ M OF CEILING 1800mm Max FROM PERIMETER WALLS.

3. EXCEPTIONS:

A) CEILING AREA OF 13 SQUARE METERS OR LESS AND SURROUNDED BY WALLS WHICH CONNECT DIRECTLY TO THE STRUCTURE ABOVE SHALL BE EXEMPT FROM THE LATERAL LOAD DESIGN REQUIREMENTS OF THESE STANDARDS.

B) CEILINGS CONSTRUCTED OF GYPSUM BOARD, SCREW ATTACHED TO SUSPENDED MEMBERS THAT SUPPORT A CONTINUOUS GYPSUM BOARD CEILING ON LEVEL AND EXTEND FROM WALL TO WALL.

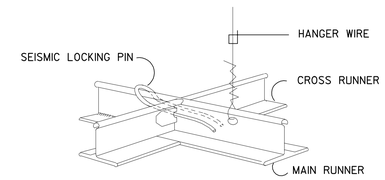

4 A606 ACOUSTICAL CEILING W/ SEISMIC SUSPENSION

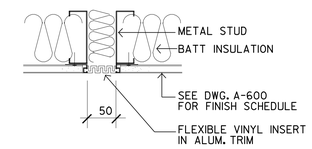

5 A606 GYPSUM BOARD CEILING SEISMIC JOINT COVER

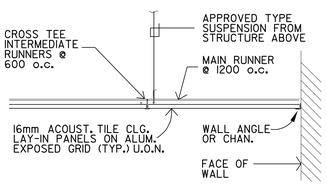

6 A606 TYP. SUSPENDED ACOUSTICAL CEILING

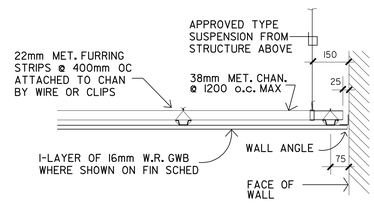

7 A606 TYP. SUSPENDED GYPSUM CEILING

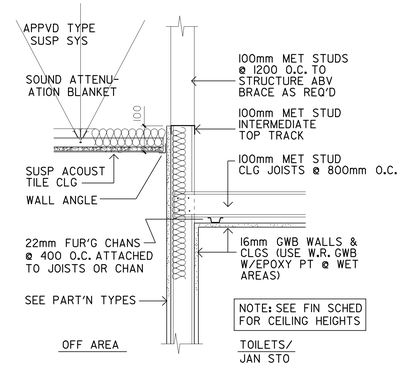

8 A606 CEILING TRANSITION DETAIL

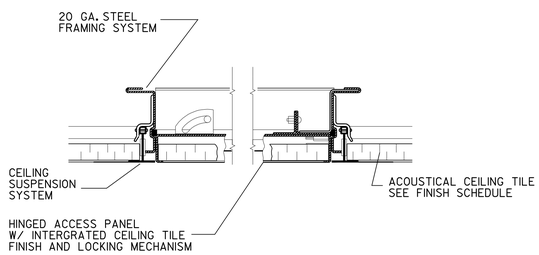

9 A606 CEILING ACCESS PANEL @ ACOUTICAL CEILING TILE AREAS

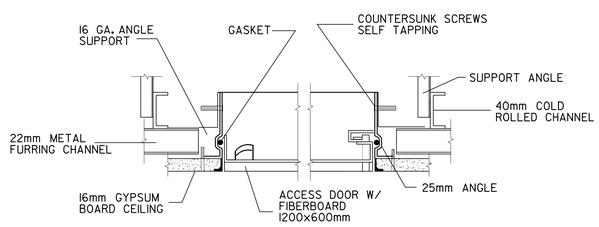

10 A606 CEILING ACCESS PANEL @ GYPSUM BOARD CEILING

US Army Corps of Engineers
New York District

Symbol	Description	Date	App.

Designed by: | Date: | Size: | Rev.:
Dwn by: | Ckd by: | Drawing file no.:
Reviewed by: | Drawing code:
Submitted by: | Plot date: 19-NOV-2004 15:53 | Plot by: ADMINW | Size: 60.000x36.0000
File name: S:\Services\military\Niagara Falls\MEPS\Architectural\A606 Design(PRINTS)-606.dgn

U.S. ARMY ENGINEER DISTRICT
CORPS OF ENGINEERS
NEW YORK, NEW YORK

PN 58873
MILITARY ENTRANCE PROCESSING STATION (MEPS)
NIAGARA FALLS, NY

SUSPENDED CEILING DETAILS

Sheet reference number:
A–606

Plot Date: 19-NOV-2004 15:50
Submitted by: e3jetmwe
Satellite: admin1\wp1\antiquare Fail AFBAMD\Drawings\Architectural\A606 Design(PRINTS)A-606.dgn

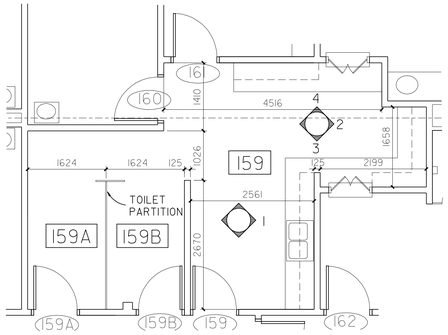

A LABORATORY RM 159
SCALE: 1:20

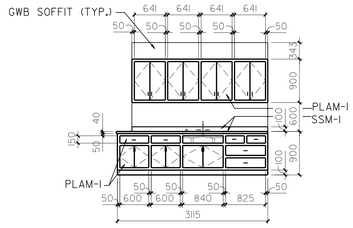

1 LABORATORY RM 159 ELEVATION
SCALE: 1:50

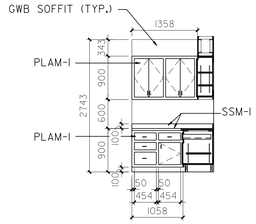

2 LABORATORY RM 159 ELEVATION
SCALE: 1:20

NOTE:
ALL UPPER CABINETRY IN LABORATORY SHALL HAVE PLAM-I FINISH WITH APPROPRIATE HARDWARE AND CABINET LOCKS (TYPICAL).

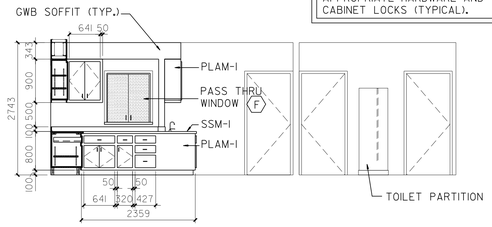

3 LABORATORY RM 159 SEROLOGY RM 159A & 159B
SCALE: 1:20

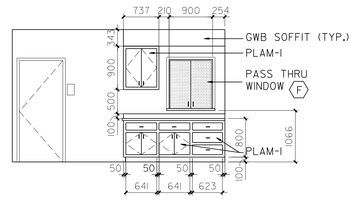

4 LABORATORY RM 159 ELEVATION
SCALE: 1:20

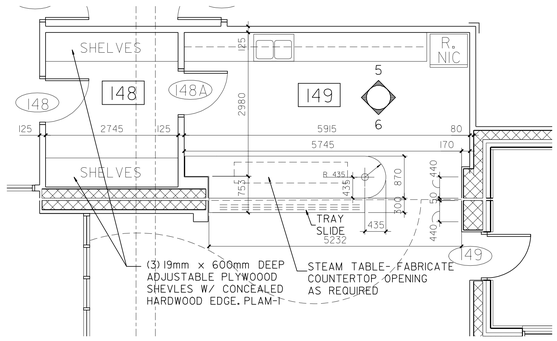

B FOOD PREP AREA 149 & FOOD STORAGE ROOM 148
SCALE: 1:20

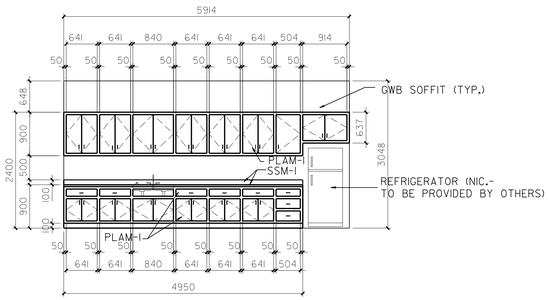

5 FOOD PREP AREA 149 ELEVATION
SCALE: 1:20

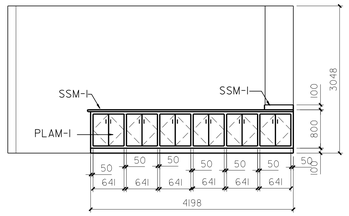

6 FOOD PREP AREA 149 ELEVATION
SCALE: 1:20

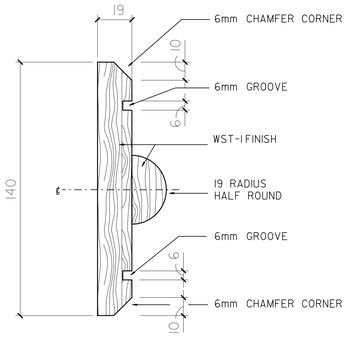

9 WOOD CHAIR RAIL SECTION
SCALE: NTS

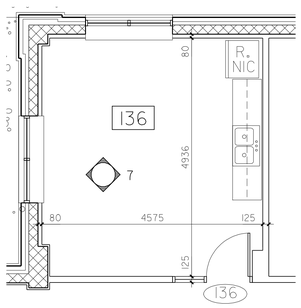

C STAFF LOUNGE ROOM 136
SCALE: 1:20

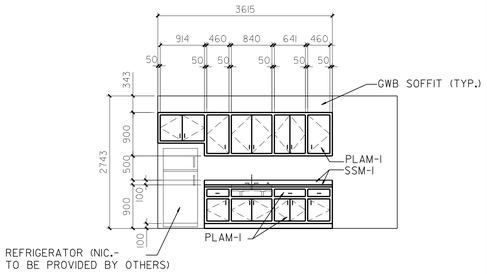

7 STAFF LOUNGE ROOM 136 ELEVATION
SCALE: 1:20

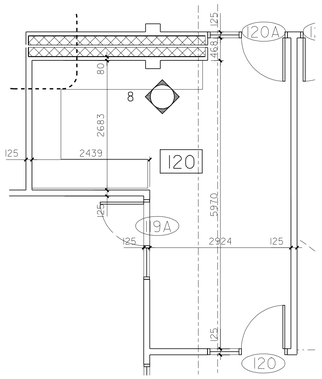

D COPY/PACKET BREAKDOWN ROOM 120
SCALE: 1:20

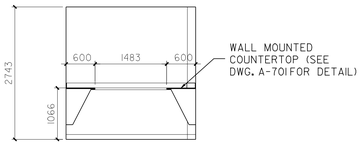

8 COPY/PACKET BREAKDOWN ROOM 120 ELEVATION
SCALE: 1:20

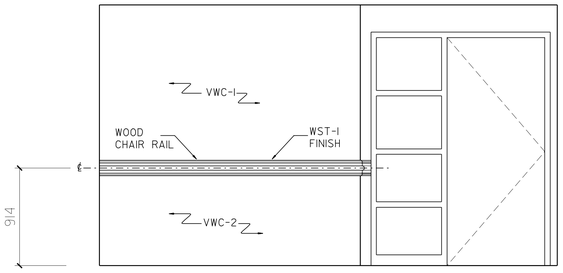

10 LOCATION OF CHAIR RAIL (TYP.) ELEVATION
SCALE: NTS

US Army Corps of Engineers
New York District

Symbol	Description	Date	Appr.

U.S. ARMY ENGINEER DISTRICT
CORPS OF ENGINEERS
NEW YORK, NEW YORK

Designed by: | Date: | Size: | Rev.:
Dwn by: | Ckd by: | Drawing file no.:
Reviewed by: | Drawing code:
Submitted by: | Plot date: 19-NOV-2004 15:03 | Plot by: e3jehlwe | Scale: 0.750000/0.000

File name: S:\Mercury\Military\Niagara Falls\MEPS\Architectural\DWG Design\PHASE\A-700.dgn

MILITARY ENTRANCE PROCESSING STATION (MEPS)
NIAGARA FALLS, NY

PN 58873

ENLARGED CASEWORK PLANS & DETAILS

Sheet reference number:
A–700

Submitted by: e3jehlwe
pathfinderutility:pwlogos Fail: AEPWDAE$PathfinderUtility$Design$PHASE$A-700.dgn
Plot Date: 19-NOV-2004 15:50

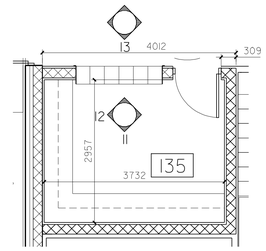

E MAIL ROOM 135
SCALE: 1:50

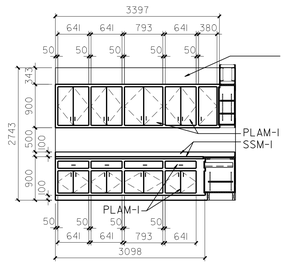

11 MAIL ROOM 135 ELEVATION
SCALE: 1:50

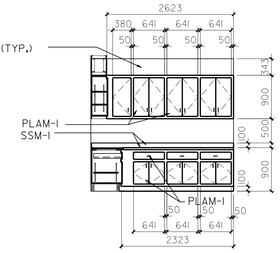

12 MAIL ROOM 135 ELEVATION
SCALE: 1:50

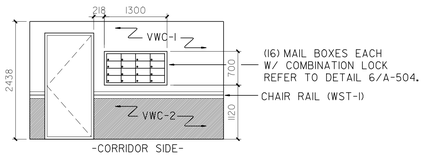

13 MAIL ROOM 135 ELEVATION
SCALE: 1:50

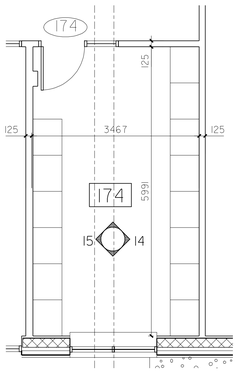

F BAGGAGE ROOM 174
SCALE: 1:50

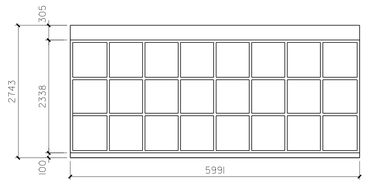

14 BAGGAGE ROOM 174 ELEVATION
SCALE: 1:50

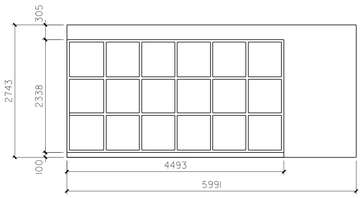

15 BAGGAGE ROOM 174 ELEVATION
SCALE: 1:50

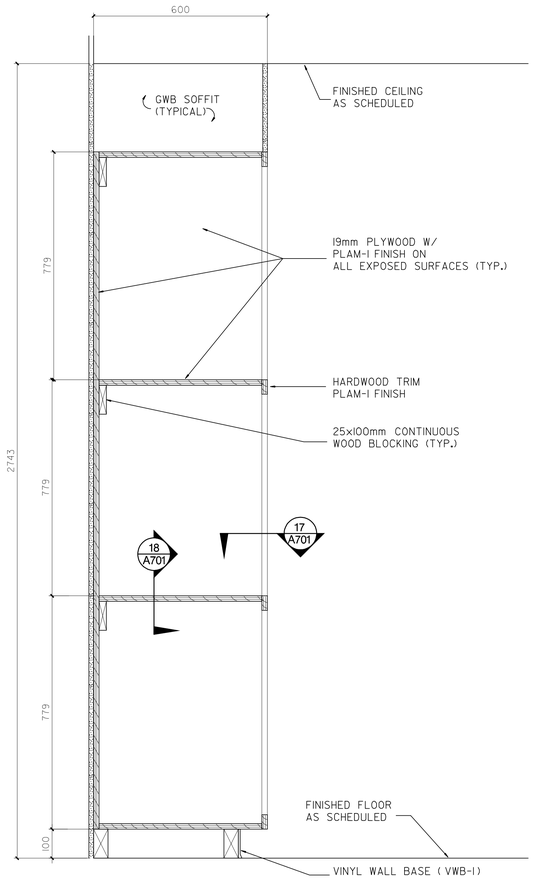

16 CASEWORK DETAIL
BAGGAGE ROOM 174
SCALE: 1:10

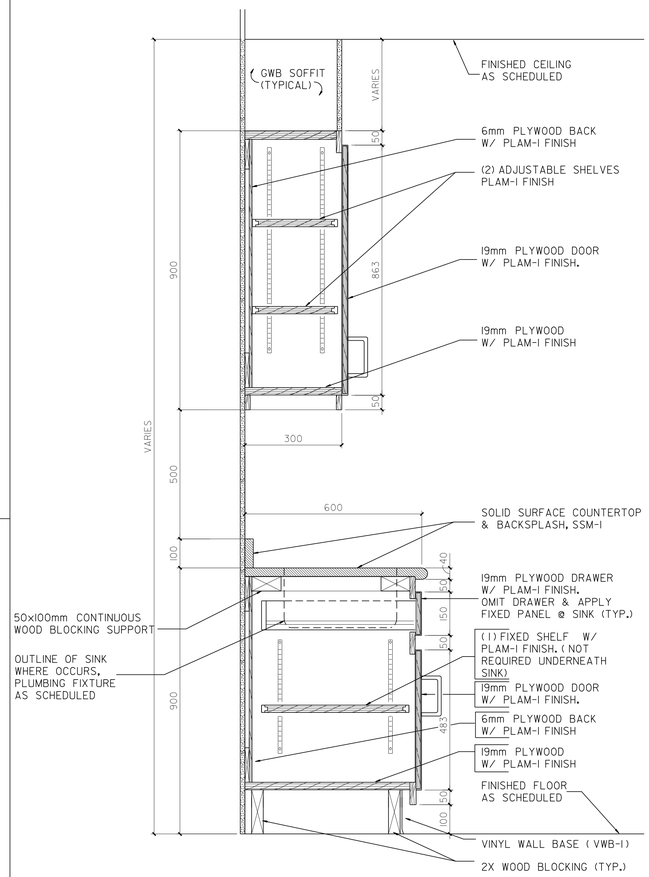

19 BASE CABINET DETAIL
SCALE: 1:10

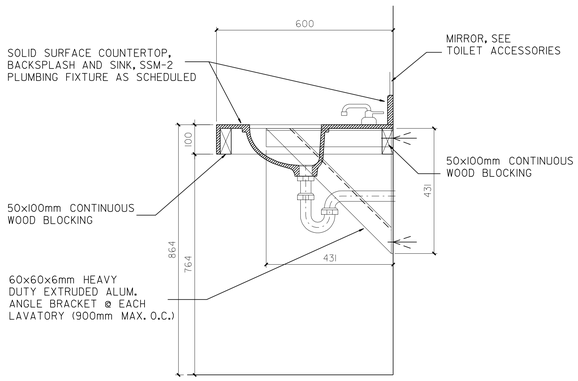

19 COUNTER /LAVATORY DETAIL
@ RESTROOMS (TYPICAL)
SCALE: 1:10

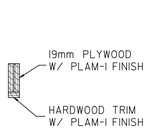

17 DETAIL
SCALE: 1:10

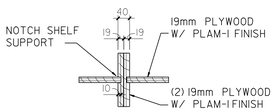

18 DETAIL
SCALE: 1:10

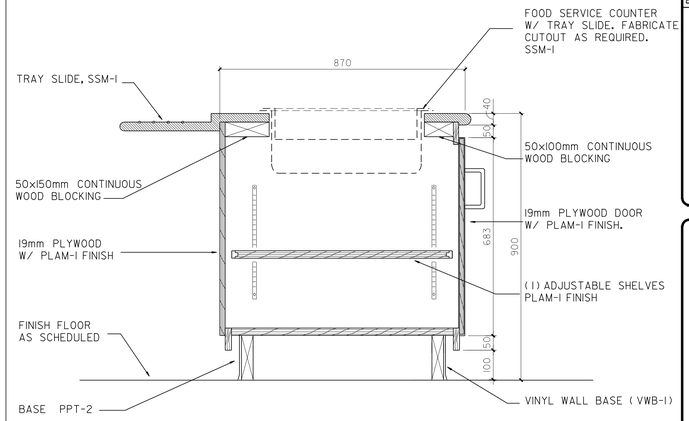

20 FOOD SERVICE COUNTER ROOM 149 DETAIL
SCALE: 1:10

US Army Corps of Engineers
New York District

Symbol	Description	Date	Appr.

Designed by:	Date:	Size:	Rev.
Dwn by:	Ckd by:	Drawing file no.:	
Reviewed by:		Drawing code:	
Submitted by:		Plot date: 19-NOV-2004 15:53 Plot by: ADMINNY Scale: SEE DRAWING	

U.S. ARMY ENGINEER DISTRICT
CORPS OF ENGINEERS
NEW YORK, NEW YORK

File name: S:\Services\military\Niagara Fall AFB\MEPS Architectural\A701 Design\PRINTS\A-701.dgn

MILITARY ENTRANCE PROCESSING STATION (MEPS)
PN 58973
NIAGARA FALLS, NY

ENLARGED CASEWORK PLANS & DETAILS

Sheet reference number:
A–701

Plot Date: 19-NOV-2004 15:50
Submitted by: e3jetmwe
S:\Other Customers\Niagara Fall AFB\MEPS\Architectural\A701 Design\PRINTS\A-701.dgn

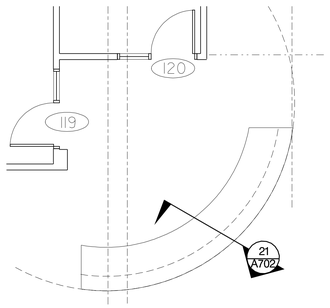

G RECEPTION DESK @ MAIN LOBBY 102
SCALE: 1:50

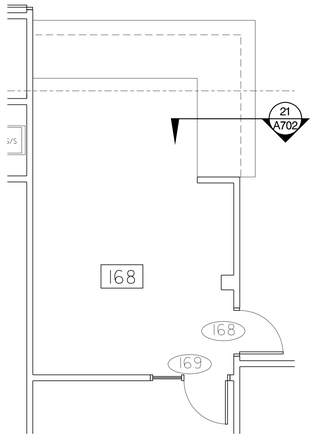

H CONTROL DESK @ MEDICAL ADMINISTRATION AREA 168
SCALE: 1:50

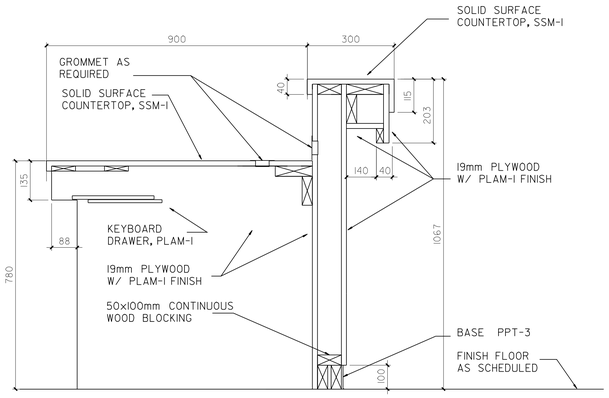

21 RECEPTION /CONTROL DESK DETAIL
SCALE: 1:10

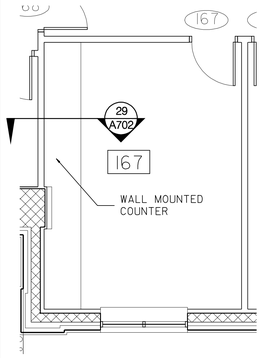

J VISION ROOM 167
SCALE: 1:50

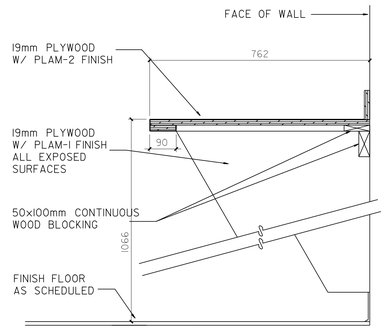

29 DETAIL
SCALE: 1:10

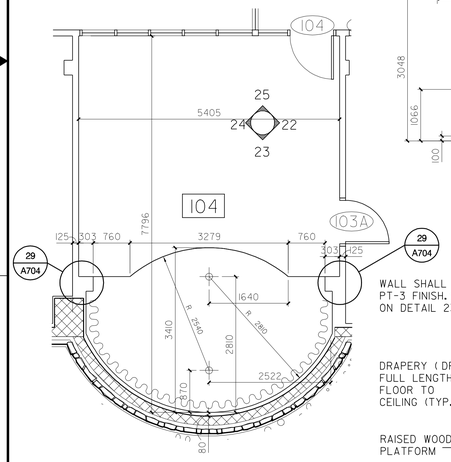

I CEREMONY ROOM 104
SCALE: 1:50

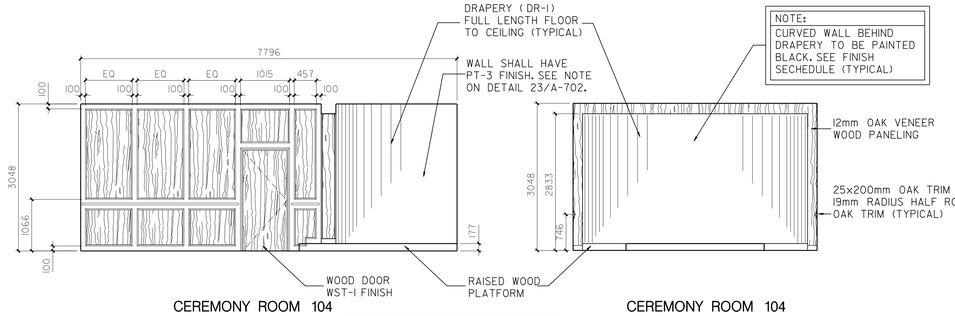

22 CEREMONY ROOM 104 ELEVATION
SCALE: 1:50

23 CEREMONY ROOM 104 ELEVATION
SCALE: 1:50

NOTE:
METAL DOOR FRAME AT DOOR 103A SHALL BE PAINTED TO MATCH WOOD VENEER PANELING

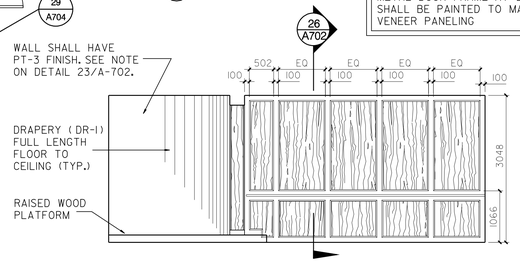

24 CEREMONY ROOM 104 ELEVATION
SCALE: 1:50

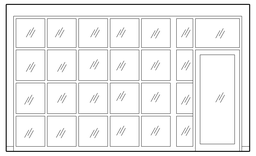

25 CEREMONY ROOM 104 ELEVATION
SCALE: 1:50

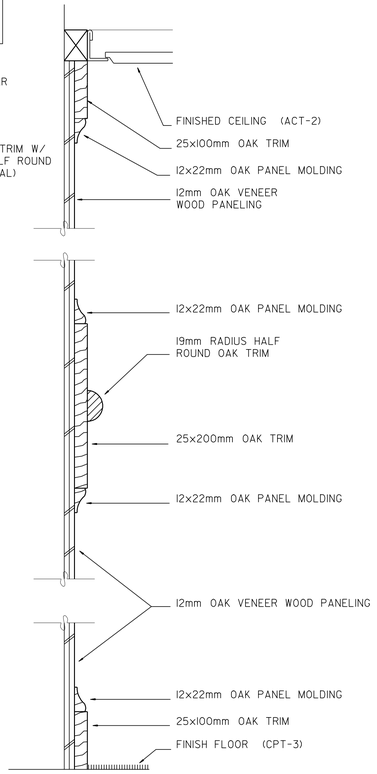

26 CEREMONY ROOM 104 DETAIL– WOOD PANELING
SCALE: 1:5

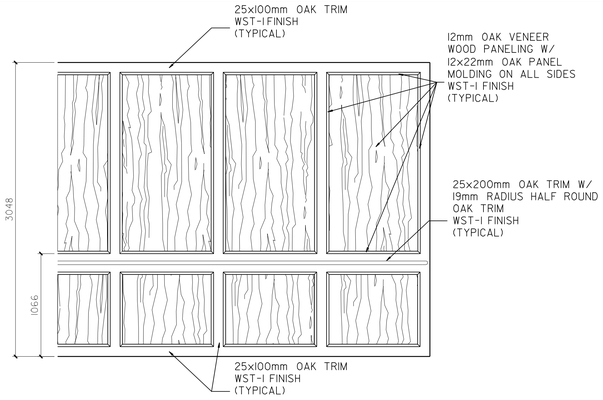

27 CEREMONY ROOM 104 DETAIL– WOOD VENEER PANEL WALL SYSTEM
SCALE: 1:20

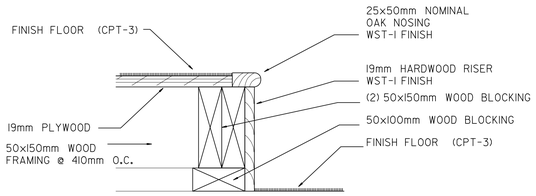

28 CEREMONY ROOM 104 DETAIL– RAISED PLATFORM EDGE
SCALE: 1:5

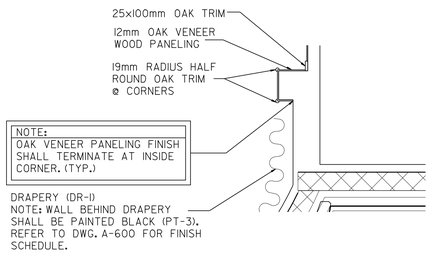

29 CEREMONY ROOM 104 DETAIL– WOOD VENEER FINISH @ PILASTERS (TYP.)
SCALE: 1:20

US Army Corps of Engineers
New York District

Symbol	Description	Date	Appr.

Designed by:	Date:	Size:	Rev.:
Dwn by:	Ckd by:	Drawing file no.:	
Reviewed by:		Drawing code:	
Submitted by:		Plot date: 19-NOV-2004 15:51 Plot by: e3jeffmw Scale: 0.000000000	

U.S. ARMY ENGINEER DISTRICT
CORPS OF ENGINEERS
NEW YORK, NEW YORK

File name: J:\Mission\Military\Niagara Falls\AE\MEPS\Architectural\DWG Design\PRINTS\A-702.dgn

PN 59873
MILITARY ENTRANCE PROCESSING STATION (MEPS)
NIAGARA FALLS, NY

ENLARGED CASEWORK PLANS & DETAILS

Sheet reference number:
A–702

Submitted by: e3jeffmw
pwtfsc-documents\cgi-pw\cgi-pw.exe?_form=documentlist+2002+Design+PRINTS+A-702.dgn
Plot Date: 19-NOV-2004 15:51

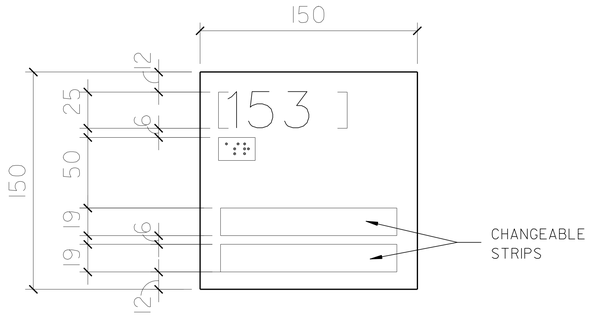

TYPE A

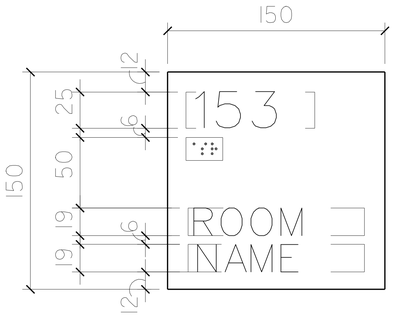

TYPE B

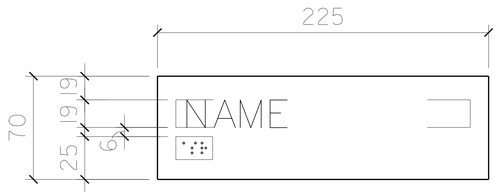

TYPE C

BRAILLE:

DOMED GRADE 2 BRAILLE, PLACED DIRECTLY BELOW LETTERING, FLUSH LEFT.

LETTERING:

RAISED WHITE CHARACTERS ON DARK BROWN BACKGROUND.

ROOM NAME- 19mm UPPER CASE HELVETICA MEDIUM, FLUSH LEFT.
ROOM NUMBER-25mm NUMBERS, HELVETICA MEDIUM, FLUSH LEFT.
SECONDARY INFORMATION- UPPER AND LOWER CASE HELVETICA REGULAR, 19mm CAPITAL LETTER HEIGHT, FLUSH LEFT.

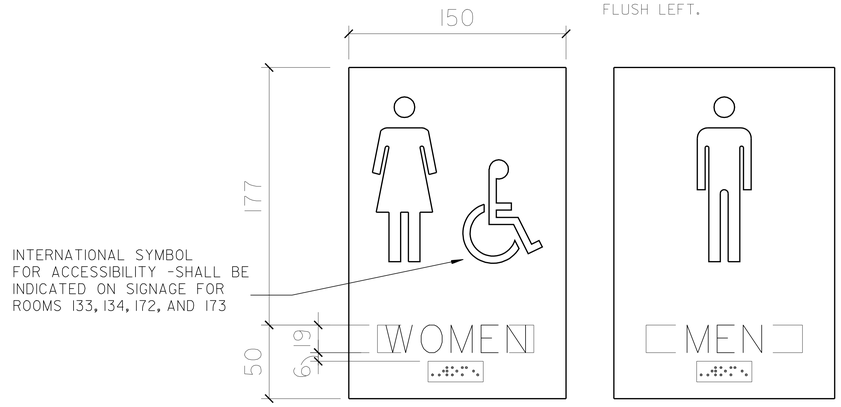

TYPE D

BRAILLE:

DOMED GRADE 2 BRAILLE, PLACED DIRECTLY BELOW LETTERING, CENTERED.

LETTERING:

RAISED WHITE CHARACTERS ON DARK BROWN BACKGROUND.

ROOM NAME- 19mm UPPER CASE HELVETICA MEDIUM, CENTERED.

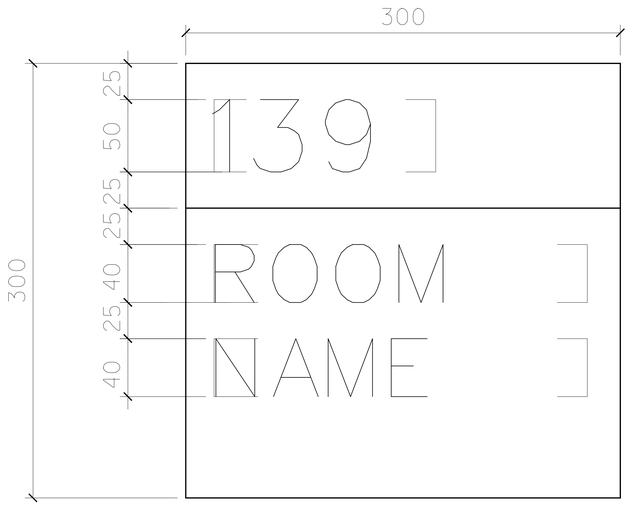

TYPE E

LETTERING:

RAISED WHITE CHARACTERS ON DARK BROWN BACKGROUND.

ROOM NAME- 40mm UPPER CASE HELVETICA MEDIUM, FLUSH LEFT.
ROOM NUMBER-50mm NUMBERS, HELVETICA MEDIUM, FLUSH LEFT.

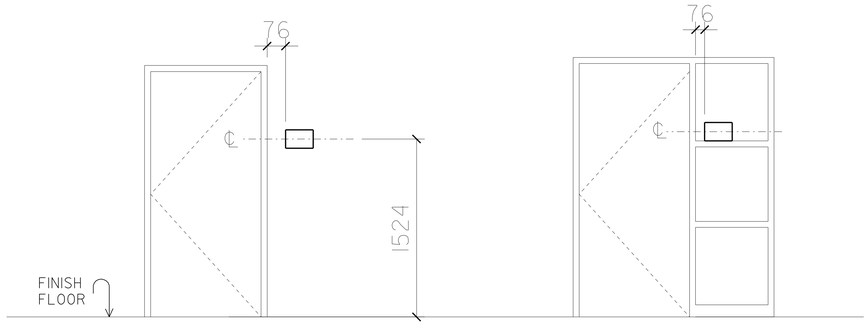

LOCATION A

SCALE: 1:20

LOCATION B

SCALE: 1:20

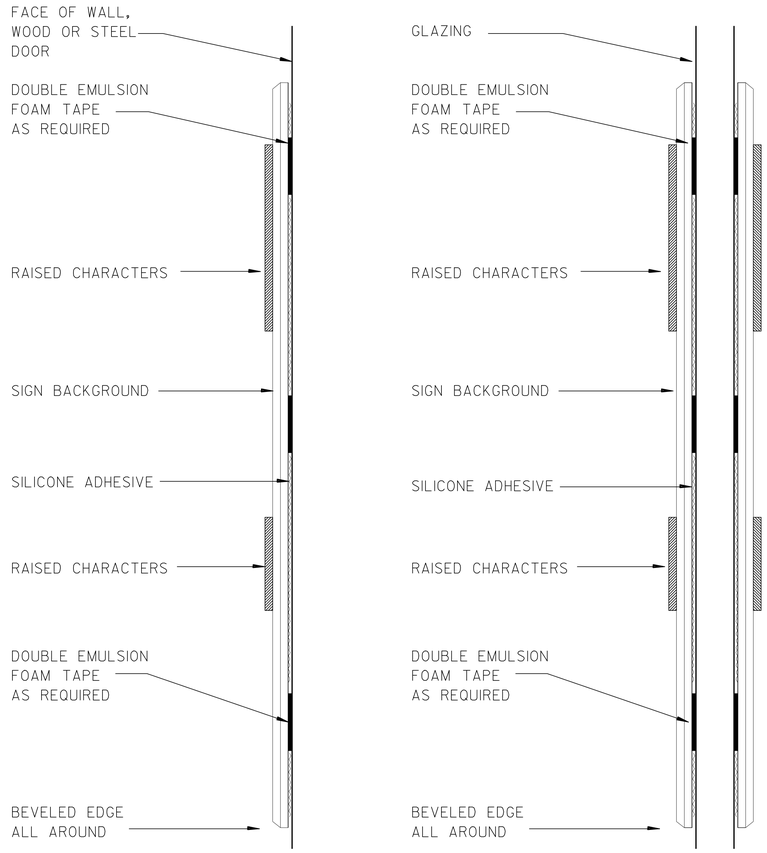

SIGN MOUNTING DETAILS

SCALE: NTS

US Army Corps of Engineers
New York District

Symbol	Description	Date	App.

Designed by:		Date:	Size: Rev:
Dwn by:	Ckd by:	Drawing file no:	
Reviewed by:		Drawing code:	
Submitted by:		Plot date: 19-NOV-2004 15:51 Plot by: s_kbarnes File: d0404ma100	

File name: S:\Division\Military\Niagara Fall AFS\MEPS\Architectural\DWG Design\PRINTS\A-703.dgn

U.S. ARMY ENGINEER DISTRICT
CORPS OF ENGINEERS
NEW YORK, NEW YORK

PN 58873
MILITARY ENTRANCE PROCESSING STATION (MEPS)
NIAGARA FALLS, NY

SIGNAGE

Sheet reference number:
A–703

Plot Date: 19-NOV-2004 15:51
Submitted by: s3jenmee
Section-subsection-graphicsgroup Fail AFB\MEPS\Architectural\DWG Design\PRINTS\A-703.dgn

INTERIOR SIGNAGE SCHEDULE

ROOM NO.	MESSAGE	SIGN TYPE	LOCATION	QTY.	REMARKS
103	BRIEFING ROOM	B	B	1	
104	CEREMONY ROOM	B	B	1	
105	VISITORS WAITING ROOM	B	B	1	
107	AIR FORCE LIAISON	B	B	1	
108	ARMY LIAISON	B	B	1	
109	SECURITY INTERVIEW	B	B	1	
110	NAVY LIAISON	B	B	1	
111	NAVY ADVANCE PLACEMENT TEST ROOM	B	B	1	
112	COAST GUARD LIAISON	B	B	1	
115	NATIONAL GUARD LIAISON	B	B	1	
116	MARINE CORPS LIAISON	B	B	1	
117	ELECTRICAL CLOSET	B	B	1	
118	GAME ROOM	B	B	1	
119	FILES ROOM	B	B	2	
120	COPY / PACKET BREAKDOWN ROOM	B	B	2	
122	OPERATIONS ADMINISTRATION	B	B / A	2	(1) SIGN SHALL BE LOCATED AT DOOR 122A AT LOCATION "A" AS SHOWN ON DWG. A-703. REFER TO GENERAL NOTES ON DRAWING A-704.
123		A	B	1	
124		A	B	1	
125		A	A	1	
126		A	B	1	
127	MIRS/ COMMUNICATION	B	A	1	
128	CONFERENCE ROOM	B	B	2	
129	COMMAND ADMINISTRATION	B	B	1	
130		A	B	1	
131		A	B	1	
132		A	B	1	
135	MAIL ROOM	B	A	1	
136	STAFF LOUNGE	B	B	1	
137	SUPPLY STORAGE ROOM	B	A	1	
137	SUPPLY STORAGE ROOM			1	
138	ELECTRICAL ROOM			1	
139	MECHANICAL ROOM			1	
140	SECURE TEST STORAGE & SCORING	B	A	1	
141	ASVAB STORAGE ROOM	B	A	2	

ROOM NO.	MESSAGE	SIGN TYPE	LOCATION	QTY.	REMARKS
142		A	B	1	
143	TESTING ADMINISTRATION	B	B	1	
144		A	B	1	
145	CAT-ASVAB TEST ROOM	B	A	1	
146	TEST ROOM	B	A	1	
147	TEST ROOM	B	A	2	(1) SIGN SHALL BE LOCATED IN ROOM 145 AT DOOR NO. 147A
148	FOOD STORAGE	B	A	2	(1) SIGN SHALL BE LOCATED IN ROOM 149 AT DOOR NO. 148A
150	APPLICANT DINING	B	A	1	
151	MEDICAL BRIEFING	B	B	2	
153	MALE ORTHO	B	A	2	(1) SIGN SHALL BE LOCATED IN ROOM 154 AT DOOR NO. 154A
154		A	A	1	
155	EXAM ROOM	B	A	1	
156	MALE URINALYSIS	B	A	1	
157	EXAM ROOM	B	A	1	
158	EXAM ROOM	B	A	1	
159	LABORATORY	B	A	1	
159A	SEROLOGY	C	A	1	
159B	SEROLOGY	C	A	1	
160	EKG / COT ROOM	B	A	1	
161	MEDICAL STORAGE ROOM	B	A	1	
162	FEMALE UNRINALYSIS	B	A	1	
164	EXAM ROOM	B	A	2	(1) SIGN SHALL BE LOCATED IN ROOM 165 AT DOOR NO. 165A
165	FEMALE ORTHO	B	A	2	(1) SIGN SHALL BE LOCATED IN ROOM 164 AT DOOR NO. 165A
166	AUDIO ROOM	B	A	1	
167	VISION TEST ROOM	B	A	1	
168	MEDICAL ADMINISTRATION	B	A	1	
169		A	B	1	
170	ELECTRICAL CLOSET	B	A	1	
171	JANITORS CLOSET	B	A	1	
174	BAGGAGE ROOM	B	B	1	
	WOMEN	D	A	3	ROOMS 113, 134, 172
	MEN	D	A	3	ROOMS 114, 133, 173

GENERAL NOTES

1. ALL ROOM SIGNS ARE ON CORRIDOR SIDE OF DOOR UNLESS OTHERWISE NOTED.
2. MOUNT SIGNS AT 1524mm O.C. ABOVE FINISHED FLOOR AT LOCATIONS INDICATED ON SCHEDULE. IF MOUNTING LOCATIONS INDICATED CANNOT BE ACHIEVED THEN MOUNT ON NEAREST ADJACENT WALL.
3. COORDINATE SIGNAGE TYPES WITH SIGNAGE SCHEDULE AND FLOOR PLANS.
4. RAISED BRAILLE TYPICAL ONLY IN AREAS ACCESSIBLE TO THE HANDICAPPED.
5. INFORMATION SHOWN ON THESE SIGNS IS FOR EXAMPLE PURPOSES ONLY AND IS NOT TO BE CONSIDERED THE FINAL INFORMATION TO BE SHOWN ON THE SIGNS.
6. ALL FINAL SIGNS/ARTWORK SHALL BE BY SIGNAGE MANUFACTURER, SUBJECT TO APPROVAL BY THE CONTRACTING OFFICER.
7. PROVIDE AND INSTALL THE FOLLOWING SIGN IN A LOCATION TO BE DETERMINED BY THE GOVERNMENT:

"IT IS A FEDERAL CRIME TO KNOWINGLY POSSESS OR CAUSE TO PRESENT, A FIREARM OR OTHER DANGEROUS WEAPONS IN THIS FACILITY. THE LAWFUL PERFORMANCE OF OFFICIAL DUTIES AUTHORIZED BY LAW IS EXEMPT. VIOLATORS WILL BE PROSECUTED TO THE FULLEST EXTENT OF THE LAW."

EXTERIOR SIGNAGE

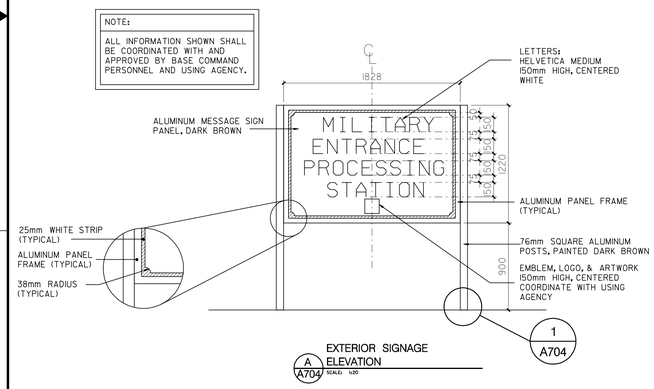

A A704 EXTERIOR SIGNAGE ELEVATION SCALE: 1:20

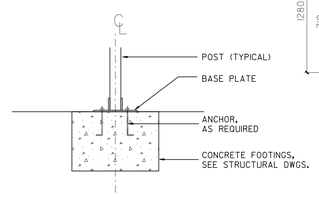

1 A704 SIGNAGE INSTALLATION DETAIL SCALE: 1:10

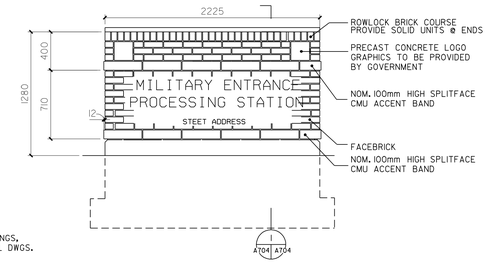

B A704 EXTERIOR MONUMENT SIGN ELEVATION (OPTIONAL ITEM) SCALE: 1:20

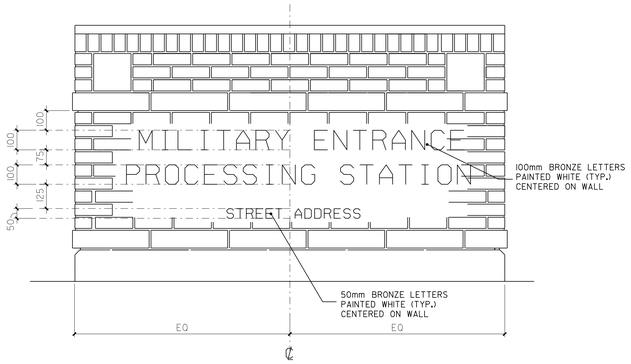

C A704 EXTERIOR MONUMENT SIGN ELEVATION (OPTIONAL ITEM) SCALE: 1:10

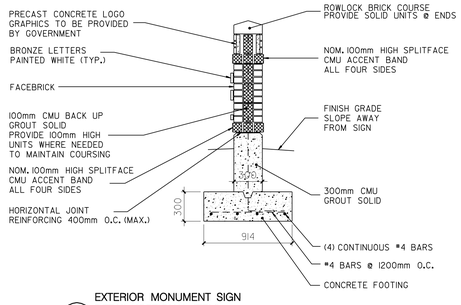

2 A704 EXTERIOR MONUMENT SIGN DETAIL (OPTIONAL ITEM) SCALE: 1:20

SECURITY GATE

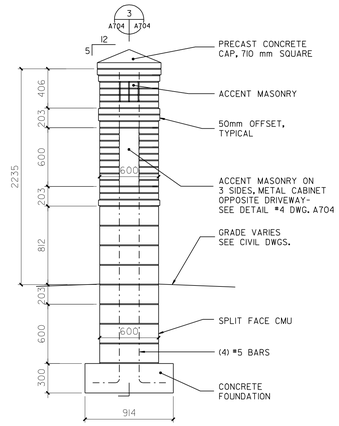

D A704 SECURITY GATE ELEVATION SCALE: 1:20

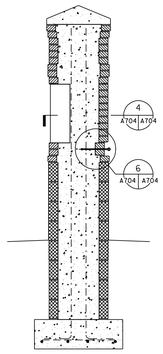

3 A704 SECURITY GATE SECTION SCALE: 1:20

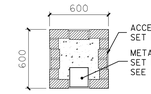

4 A704 SECURITY GATE DETAIL SCALE: 1:20

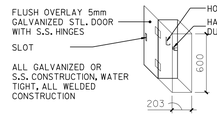

5 A704 SECURITY GATE DETAIL SCALE: 1:20

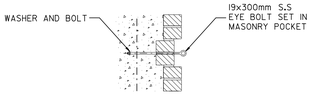

6 A704 SECURITY GATE DETAIL SCALE: 1:20

US Army Corps of Engineers New York District

Symbol	Description	Date	Appr.

U.S. ARMY ENGINEER DISTRICT
CORPS OF ENGINEERS
NEW YORK, NEW YORK

Designed by: | Date: | Size: | Rev.
Dwn by: | Ckd by: | Drawing file no.:
Reviewed by: | Drawing code:
Submitted by: | Plot date: 19-NOV-2004 15:51 | Plot by: admtrew | Size: 50.00x32.00000
File name: S:\Secure\military\Hagerty Fall AFB\MEPS Architectural\ARK_Design\PRINTS\A-704.dgn

MILITARY ENTRANCE PROCESSING STATION (MEPS)
PN 58973
HAGERTY FALL AIR FORCE BASE, ALABAMA

SIGNAGE SCHEDULE & DETAILS

Sheet reference number:
A–704

Plot Date: 19-NOV-2004 15:51
Submitted by: e3jetmew
S:\Secure\military\Hagerty Fall AFB\MEPS Architectural\ARK_Design\PRINTS\A-704.dgn

OCCUPANCY CALCULATION

AS PER NFPA 101

OFFICE AREA : 100 S.F. / PERSON.

CEREMONY ROOM: 15 S.F. / PERSON

NOTES:

ALL PIPE PENETRATIONS THROUGH ONE HOUR FIRE RATED CONSTRUCTION SHALL BE THOROUGHLY PACKED WITH FIRESTOPPING AT THE POINT OF PENETRATION WITH FIRESAFING TO PROVIDE A UNIFORM RATING THROUGHOUT. (SEE SPECIFICATION)

LEGEND

- 1HOUR FIRE RATED WALL WITH ¾ HOUR FIRE RATED DOOR
- FIRE EXTINGUISHER - WALL MOUNTED (FE)
- FIRE EXTINGUISHER CABINET - SEMIRECESSED (FEC)
- EXIT LIGHT SIGN, DARKENED PORTION INDICATES DIRECTION OF EXIT
- DIRECTION OF TRAVEL
- 109 ROOM NUMBER

THIS DRAWING IS NOT PART OF THE CONSTRUCTION CONTRACT AND SHALL BE USED FOR REFERENCE ONLY. ALL INFORMATION ON THIS DRAWING IS CONTAINED ELSEWHERE.

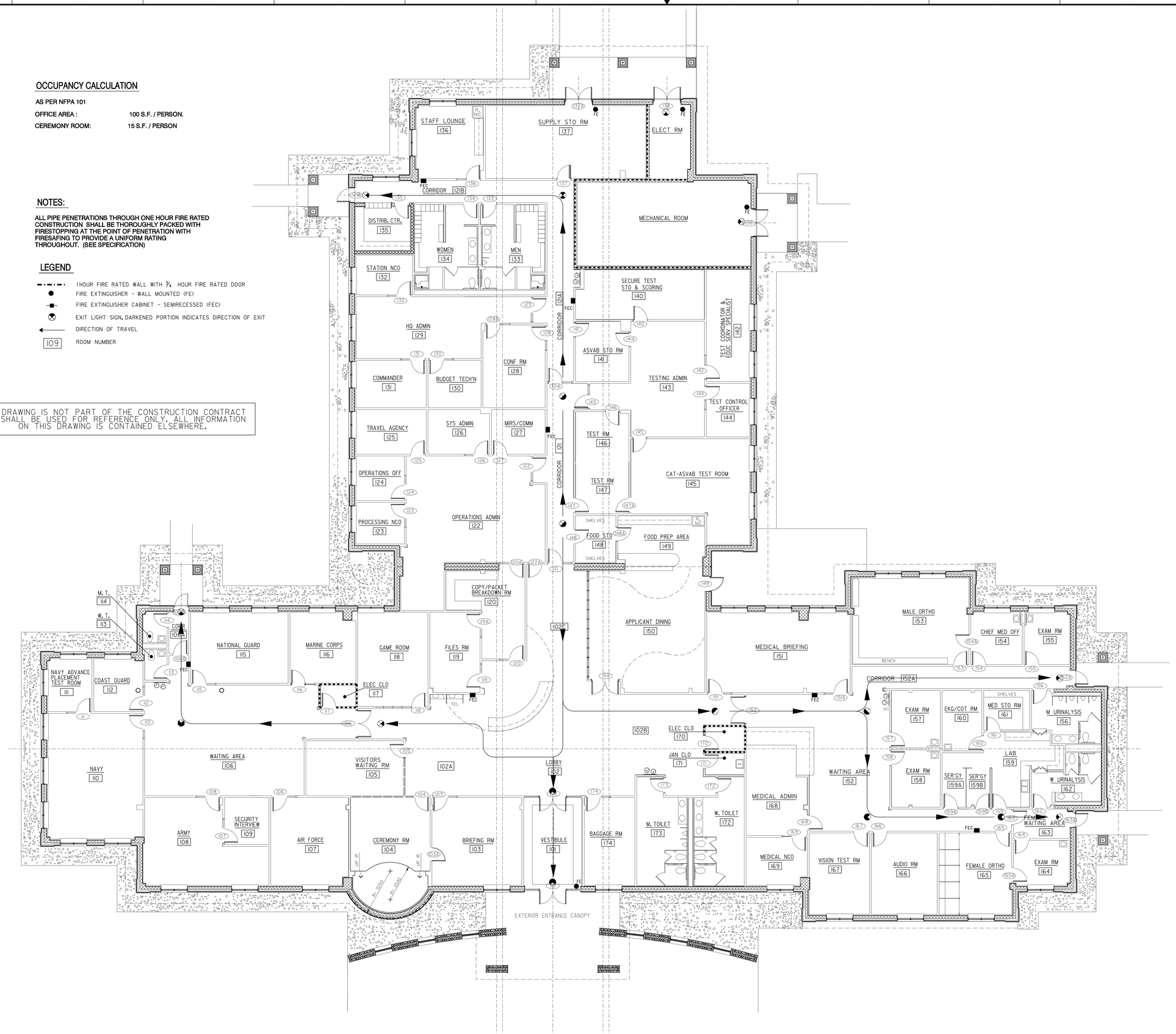

US Army Corps of Engineers
New York District

Symbol	Description	Date	Appr.
	80% SUBMISSION	10/04/04	
	90% SUBMISSION	10/04/04	
	95% SUBMISSION	09/30/04	
	35% SUBMISSION	08/30/04	

U.S. ARMY ENGINEER DISTRICT
CORPS OF ENGINEERS
NEW YORK, NEW YORK

Designed by: | Date: | Size: | Rev:
Dwn by: | Ckd by: | Drawing file no.:
Reviewed by: | Drawing code:
Submitted by: | Plot date: 19-NOV-2004 15:51 | Plot by: eldaphone | Scale: 1/32NOD0000000

File name: S:\Benson\military\Niagara Falls\MEPS\Architecture\LS\Design\PRINTS\LS-101.dgn

PN 58973
MILITARY ENTRANCE PROCESSING STATION (MEPS)
NIAGARA FALLS, NY

LIFE SAFETY PLAN

Sheet reference number:
LS–101

Submitted by: e3lehmwe
perforcedmilitary#Nicaper# Edit: AFBANDT\admin\scurrie\tbl\ Design\PRINTS\LS-101.dgn
Plot Date: 19-NOV-2004 15:51

GENERAL NOTES:

DESIGN LOADS

SNOW LOAD	
GROUND SNOW LOAD	2.2 KN/M^2
FLAT ROOF SNOW LOAD	1.6 KN/M^2
UNBALANCED SNOW LOAD	2.6 KN/M^2
FROST DEPTH	1,500 MM
WIND LOAD	
BASIC WIND SPEED	44.7 M/S
SOIL BEARING CAPACITY	168 KN/M^2

SEISMIC
BUILDING CLASSIFICATION: II
SEISMIC USE GROUP: I
SITE CLASSIFICATION: D
Ss = .31G
S1=.067G

REINFORCED CONCRETE:

CONCRETE	30 MPa - FOUNDATION WALL AND FOOTINGS
CONCRETE	25 MPa @ 28 DAYS, NORMAL WEIGHT: SLAB ON GRADE
REINFORCING	ASTM A615 GRADE 60
WELDED WIRE FABRIC	ASTM A185

1. CONCRETE WORK SHALL CONFORM TO ACI 318-02, "BUILDING CODE REQUIREMENTS FOR REINFORCED CONCRETE".
2. MINIMUM OF 72 HOURS SHALL ELAPSE BETWEEN ADJACENT CONCRETE PLACEMENTS SEPARATED BY CONSTRUCTION JOINTS.
3. REINFORCING LAP SPLICES SHALL BE PLACED ONLY WHERE INDICATED OR CALLED FOR UNLESS OTHERWISE APPROVED BY THE CONTRACTING OFFICER.
4. MINIMUM COVER FOR CONCRETE REINFORCEMENT:EXPOSED TO EARTH OR WEATHER - 38 MM
   CAST AGAINST AND PERMANENTLY EXPOSED TO EARTH - 75MM

STRUCTURAL STEEL:

SHAPES, PLATES, BARS	ASTM A36
HIGH STRENGTH BOLTS	ASTM A325 - MIN. 3/4" DIAM.
WELDING	AWS D1.1.E70XX
ANCHOR BOLTS	ASTM 307, GRADE A

1. STRUCTURAL STEEL WORK SHALL CONFORM TO THE AISC "SPECIFICATION FOR STRUCTURAL STEEL BUILDINGS - ALLOWABLE STRESS DESIGN (ASD)
2. ALL GROOVE WELDS SHALL BE FULL PENETRATION.
3. WHERE FILLET WELD SIZE IS NOT SHOWN, MINIMUM SIZE SHALL BE 5MM.
4. ALL WELDS SHALL BE SHOP WELDS (TYPICAL UNLESS OTHERWISE SHOWN OR APPROVED).

ROOF TRUSS FRAMING SYSTEM:

THE ROOF TRUSS FRAMING SYSTEM SHALL BE PREFABRICATED AS PER PERFORMANCE SPECIFICATION SECTION 05425

OPEN WEB STEEL JOISTS ATTIC FLOOR:

TYPE K SERIES
1. OPEN WEB JOISTS SHALL CONFORM TO THE STEEL JOIST INSTITUTE STANDARD SPECIFICATIONS FOR OPEN WEB STEEL JOIST K SERIES
2. MANUFACTURER SHALL VERIFY JOIST SIZES SHOWN ARE ADEQUATE AT THE SPANS INDICATED ON THE PLAN. JOIST CHORDS AND WEB MEMBERS SHALL BE INCREASED IN SIZE AS REQUIRED.
3. MANUFACTURER SHALL VERIFY JOIST SIZES SHOWN ARE ADEQUATE TO SUPPORT MECHANICAL EQUIPMENT AND DUCTWORK AS INDICATED ON MECHANICAL DRAWINGS. VERIFY LOADING OF EQUIPMENT TO BE INSTALLED AT THEIR APPROPRIATE LOCATION.

METAL DECKS:

DEPTH: 38mm

1. DECKS SHALL CONFORM TO THE "SPECIFICATIONS FOR THE DESIGN OF COLD FORMED STEEL STRUCTURAL MEMBERS" 1997 (AISI) AND TO THE "DESIGN MANUAL FOR COMPOSITE DECKS, ROOF DECKS, AND CELLULAR METAL FLOOR DECK WITH ELECTRICAL DISTRIBUTION," PUBLICATION NO. 29, 1995 (SDI).
2. ROOF DECK SHALL BE ATTACHED TO STEEL SUPPORTS WITH 19mm DIA. PUDDLE WELDS @ 305mm o.c. SIDE SEAMS TO BE BUTTON PUNCHED @ 305mm o.c.
3. ROOF DECK SHALL BE DESIGNED AS A DIAPHRAGM.

REINFORCED MASONRY:

CONCRETE MASONRY UNITS	ASTM C90 GRADE N-1 NORMALWEIGHT UNITS
MORTAR	ASTM C270 TYPE S
JOINT REINFORCEMENT	LADDER TYPE FOR CAVITY WALLS, TRUSS TYPE FOR SINGLE WYTHE WALLS

1. HORIZONTAL JOINT REINFORCEMENT SHALL BE EXTRA HEAVY 5MM SIDE RODS, NO. 9 GAGE CROSS RODS.
2. LAP SPLICES SHALL BE THE GREATER OF 40 BAR DIAMETERS OR 610 MM O.C. LAP SPLICES SHALL BE STAGGERED.
3. ALL CELLS RECEIVING ANCHOR BOLTS SHALL BE GROUTED SOLID 2 COURSES VERTICALLY MIN.
4. CMU WALLS SHALL HAVE A BOND BEAM WITH 2-#16 AT THE BOTTOM COURSE, TOP COURSE OR NEXT TO THE TOP COURSE.
5. LINTELS SHALL HAVE A MINIMUN 200 MM BEARING EACH SIDE. STEEL LINTELS EXPOSED TO WEATHER SHALL BE GALVANIZED.
6. OPENINGS IN CMU WALLS SHALL BE REINFORCED WITH 2-#16 VERTICAL ON EACH SIDE OF OPENING FOR FULL HEIGHT OF WALL, AND 2-#16 HORIZONTAL AT TOP AND BOTTOM EXTENDING 610 MM PAST OPENING. LINTEL BARS ABOVE THE OPENING MAY SERVE AS THE HORIZONTAL BARS. CELLS WITH REBARS MUST BE FILLED WITH GROUT.
7. AT EACH SIDE OF A CONTROL JOINT PROVIDE 2-#16 VERTICAL FOR FULL HEIGHT OF WALL. FOR LOCATIONS AND DETAIL OF CONTROL JOINTS SEE ARCHITECTURAL DRAWINGS.
8. ALL MASONRY REINFORCEMENT SHALL BE PLACED USING WIRE CENTERING AND CAGING CLIPS TO ENSURE PROPER SPACING.
9. VERTICAL REINFORCEMENT IN ALL EXTERIOR MASONRY WALLS SHALL BE #19 @ 610 mm O.C. ALL CELLS FULLY GROUTED.
10. PROVIDE HORIZONTAL SHEAR REINFORCEMENT, 2#16 @ 915 mm O.C. WHERE NOTED.

US Army Corps of Engineers
New York District

Symbol	Description	Date	Appr.

U.S. ARMY ENGINEER DISTRICT
CORPS OF ENGINEERS
NEW YORK, NEW YORK

Designed by: | Date: | Size | Rev.
Dwn by: | Ckd by: | Drawing file no:
Reviewed by: | Drawing code:
Submitted by: | Plot date: 19-NOV-2004 16:02 | Plot by: admjenwe | Scale: SC=0000000000

File name: S:\Benson\military\Niagara_Falls\MEPS\Structural\MEPS_S-001.dgn

PN 56873
MILITARY ENTRANCE PROCESSING STATION (MEPS)
NIAGARA FALLS, NY

GENERAL NOTES

Sheet reference number:
S–001

Submitted by: admjenwe
Plot Date: 19-NOV-2004 16:02
Saf file: admmilcon\niagara\Niagara Fall AFB\MEPS\structural\MEPS S-001.dgn

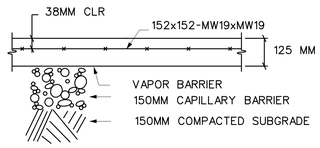

TYPICAL SLAB ON GRADE

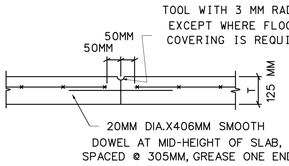

TYPICAL SLAB CONSTRUCTION JOINT

TYPICAL SLAB CONTRACTION JOINT

N.T.S.

TYPICAL COLUMN ISOLATION JOINT

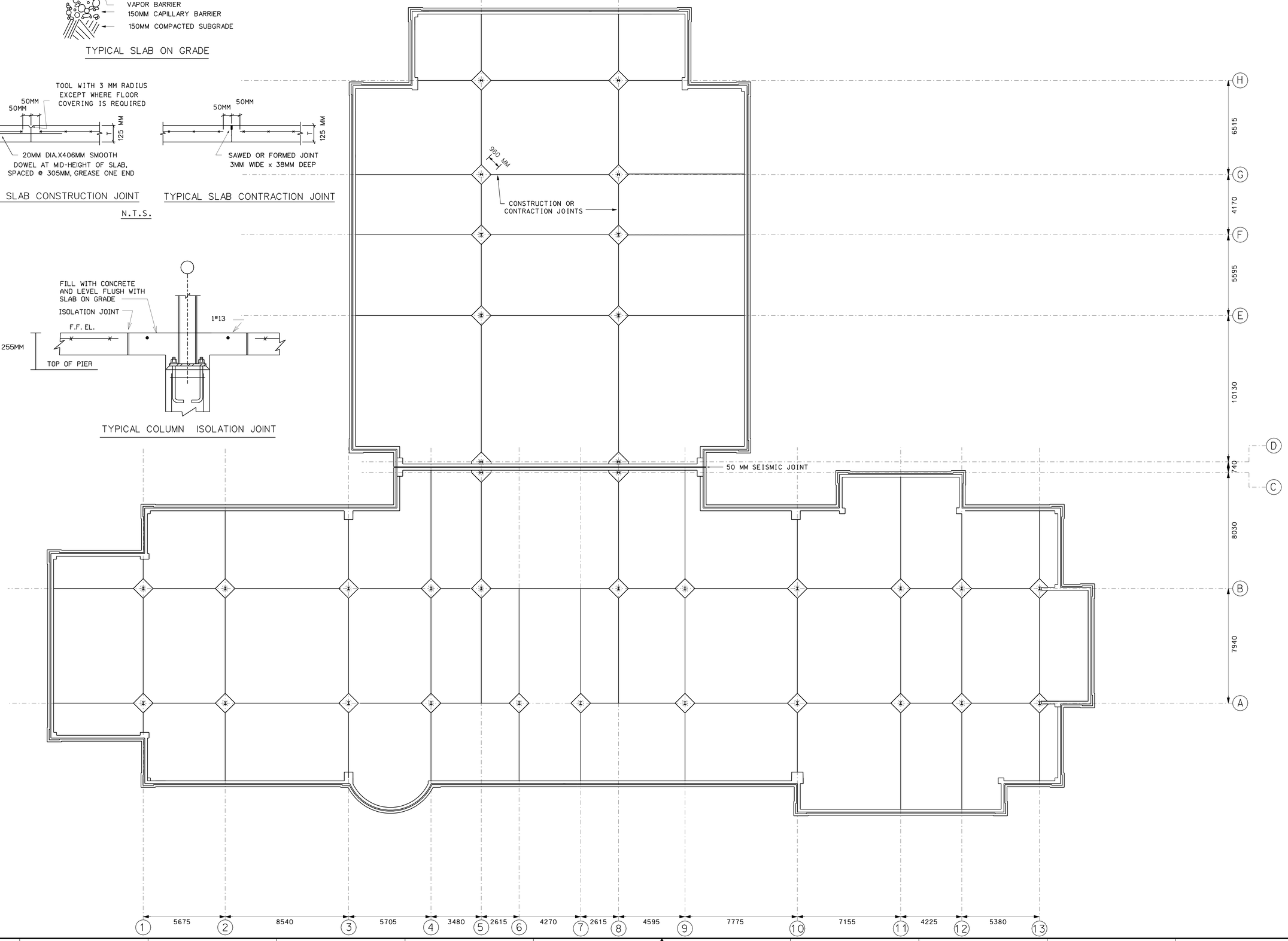

US Army Corps of Engineers
New York District

Symbol	Description	Date	Appr.
	90% SUBMISSION	10/04/04	
	35% SUBMISSION	09/30/04	
	15% SUBMISSION	09/30/04	

U.S. ARMY ENGINEER DISTRICT
CORPS OF ENGINEERS
NEW YORK, NEW YORK

Designed by: J.AL
Dwn by: J.AL
Ckd by:
Reviewed by:
Submitted by:
Date:
Drawing file no:
Drawing code:
Plot date: 19-NOV-2004 16:02
Plot by: eldenmw
Scale: 100.000000000000
Size
Rev.
File name: S:\Benson\military\Niagara Falls\MEPS\Structural\MEPS S-101.dgn

PN 59873
MILITARY ENTRANCE PROCESSING STATION (MEPS)
NIAGARA FALLS, NY

SLAB PLAN

Sheet reference number:
S–101

Submitted by: eldenmw
Plot Date: 19-NOV-2004 16:02
Saf:Nonadministrative\Niagara Fall AFB\MEPS\Structural\MEPS S-101.dgn

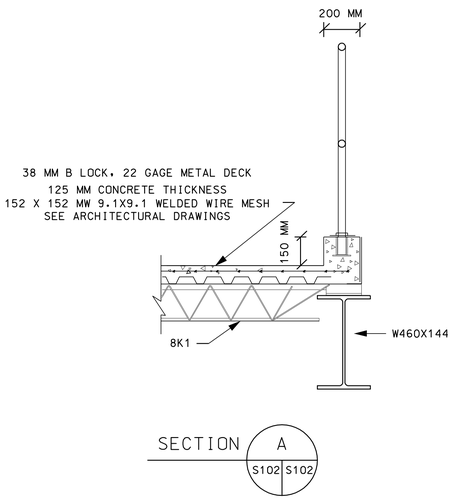

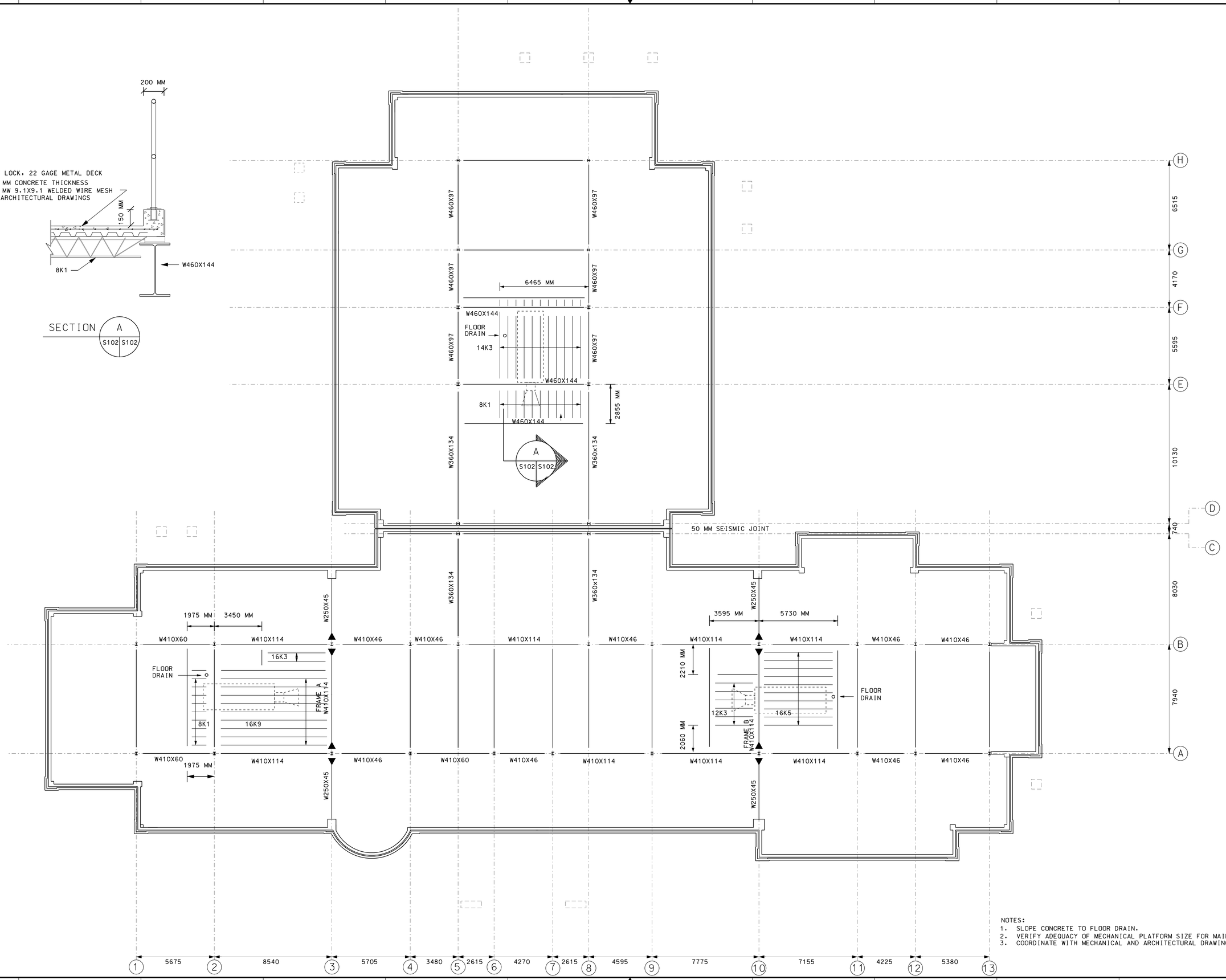

NOTES:
1. SLOPE CONCRETE TO FLOOR DRAIN.
2. VERIFY ADEQUACY OF MECHANICAL PLATFORM SIZE FOR MAINTENANCE.
3. COORDINATE WITH MECHANICAL AND ARCHITECTURAL DRAWINGS.

US Army Corps of Engineers
New York District

Symbol	Description	Date	Appr.
80% SUBMISSION		10/04/04	
90% SUBMISSION		09/09/04	
15% SUBMISSION		08/10/04	

U.S. ARMY ENGINEER DISTRICT
CORPS OF ENGINEERS
NEW YORK, NEW YORK

Designed by: JAL
Dwn by: JAL
Ckd by:
Reviewed by:
Submitted by:
Date:
Drawing file no:
Drawing code:
Plot date: 19-NOV-2004 16:02
Plot by: eblanchard
Scale: 1/4=1'0"/0.0000
Size
Rev.

File name: S:\Benson\military\Niagara Falls\MEPS\Structural\MEPS S-102.dgn

MILITARY ENTRANCE PROCESSING STATION (MEPS)
PN 59873
NIAGARA FALLS, NY

STEEL FRAMING PLAN

Sheet reference number:
S–102

Submitted by: eblanchard
Plot Date: 19-NOV-2004 16:02
Plot by: eblanchard
Filename: S:\Benson\military\Niagara Falls\MEPS\Structural\MEPS S-102.dgn

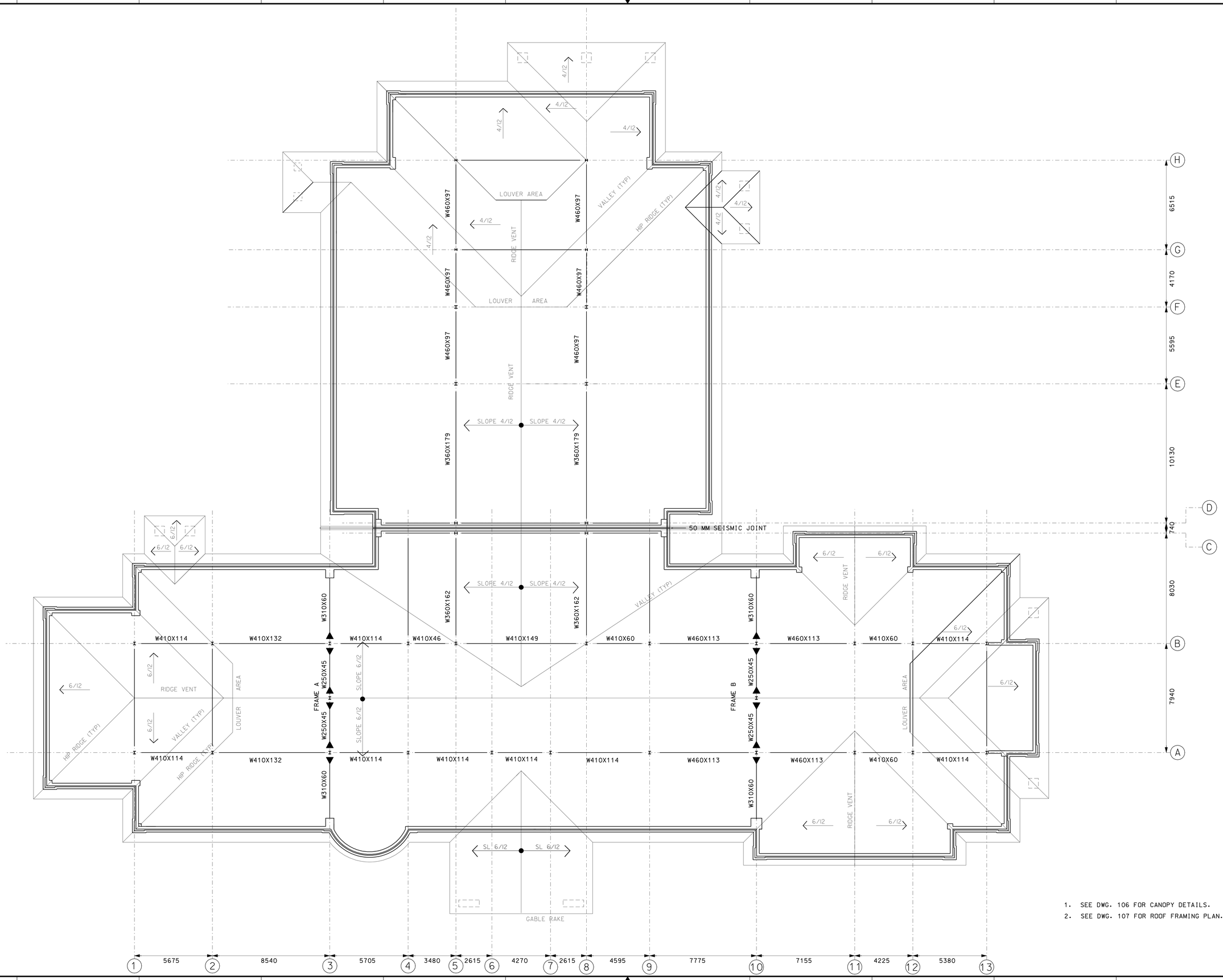

1. SEE DWG. 106 FOR CANOPY DETAILS.
2. SEE DWG. 107 FOR ROOF FRAMING PLAN.

US Army Corps of Engineers
New York District

Symbol	Description	Date	Appr.
	90% SUBMISSION	10/04/04	
	30% SUBMISSION	06/01/04	
	15% SUBMISSION	03/05/04	

U.S. ARMY ENGINEER DISTRICT
CORPS OF ENGINEERS
NEW YORK, NEW YORK

Designed by: JAL
Dwn by: JAL
Ckd by:
Reviewed by:
Submitted by:
Date:
Size:
Rev.
Drawing file no.:
Drawing code:
Plot date: 19-NOV-2004 16:02
Plot by: e3jetmwe
Scale: 100.000000:1.000000
File name: S:\Sacom\military\Niagara Fall AFB\MEPS\Structural\MEPS S-103.dgn

PN 58673
MILITARY ENTRANCE PROCESSING STATION (MEPS)
NIAGARA FALLS, NY

ROOF SUPPORT PLAN

Sheet reference number:
S–103

Submitted by: e3jetmwe
Plot Date: 19-NOV-2004 16:02
S:\Filerooms\military\Niagara Fall AFB\MEPS\Structural\MEPS S-103.dgn

COLUMN MARK	1A	1B	2A	2B	3A	3B	4A	4B	5B	5C	5D	5E	5F	5G	5H	6A	7A
TOP OF COLUMN																	
DESIGNATION REF. FIN. FLOOR EL. = 0.0	W6X25 (W150X37)	W6X25 (W150X37)	W6X25 (W150X37)	W6X25 (W150X37)	W6X25 (W150X37)	W6X25 (W150X37)	W6X25 (W150X37)	W6X25 (W150X37)	W6X25 (W150X37)	W6X25 (W150X37)	W6X25 (W150X37)	W8X31 (W200X46)	W8X31 (W200X46)	W6X25 (W150X37)	W6X25 (W150X37)	W6X25 (W150X37)	W6X25 (W150X37)
TOP PL.THICKNESS	13MM	13MM	13MM	13MM	13MM	13MM	13MM	13MM	13MM	13MM	13MM	13MM	13MM	13MM	13MM	13MM	13MM
BASE PL. SIZE L X W	305X305	305X305	305X305	305X305	305X305	305X305	305X305	305X305	305X305	305X305	305X305	355X355	355X355	305X305	305X305	305X305	305X305
BASE PL. SIZE THICK	25	25	25	25	25	25	25	25	25	25	25	25	25	25	25	25	25
BASE PLATE TYPE	A	A	A	A	A	A	A	A	A	A	A	A	A	A	A	A	A
PIER TYPE	1	1	1	1	1	1	1	1	1	2	2	1A	1A	1	1	1	1
FOOTING TYPE	A	A	A	A	A	A	A	A	A	B	B	A	A	A	A	A	A
TOP OF PIER ELEV.	-255MM	-255MM	-255MM	-255MM	-255MM	-255MM	-255MM	-255MM	-255MM	-255MM	-255MM	-255MM	-255MM	-255MM	-255MM	-255MM	-255MM
TOP OF FTG. ELEV.	-915MM	-915MM	-915MM	-915MM	-915MM	-915MM	-915MM	-915MM	-915MM	-760MM	-760MM	-915MM	-915MM	-915MM	-915MM	-915MM	-915MM

COLUMN MARK	8B	8C	8D	8E	8F	8G	8H	9A	9B	10A	10B	11A	11B	12A	12B	13A	13B
TOP OF COLUMN																	
DESIGNATION REF. FIN. FLOOR EL. = 0.0	W6X25 (W150X37)	W6X25 (W150X37)	W6X25 (W150X37)	W8X31 (W200X46)	W8X31 (W200X46)	W6X25 (W150X37)	W6X25 (W150X37)	W6X25 (W150X37)	W6X25 (W150X37)	W6X25 (W150X37)	W6X25 (W150X37)	W6X25 (W150X37)	W6X25 (W150X37)	W6X25 (W150X37)	W6X25 (W150X37)	W6X25 (W150X37)	W6X25 (W150X37)
TOP PL.THICKNESS	13MM	13MM	13MM	13MM	13MM	13MM	13MM	13MM	13MM	13MM	13MM	13MM	13MM	13MM	13MM	13MM	13MM
BASE PL. SIZE L X W	305X305	305X305	305X305	355X355	355X355	305X305	305X305	305X305	305X305	305X305	305X305	305X305	305X305	305X305	305X305	305X305	305X305
BASE PL. SIZE THICK	25	25	25	25	25	25	25	25	25	25	25	25	25	25	25	25	25
BASE PLATE TYPE	A	A	A	A	A	A	A	A	A	A	A	A	A	A	A	A	A
PIER TYPE	1	2	2	1A	1A	1	1	1	1	1	1	1	1	1	1	10	10
FOOTING TYPE	A	B	B	A	A	A	A	A	A	A	A	A	A	A	A	C	C
TOP OF PIER ELEV.	-255MM	-255MM	-255MM	-255MM	-255MM	-255MM	-255MM	-255MM	-255MM	-255MM	-255MM	-255MM	-255MM	-255MM	-255MM	-255MM	-255MM
TOP OF FTG. ELEV.	-915MM	-760MM	-760MM	-915MM	-915MM	-915MM	-915MM	-915MM	-915MM	-915MM	-915MM	-915MM	-915MM	-915MM	-915MM	-915MM	-915MM

US Army Corps of Engineers
New York District

Symbol	Description	Date	Appr.
90%	SUBMISSION	10/04/04	
95%	SUBMISSION	09/09/04	
35%	SUBMISSION	05/30/04	

U.S. ARMY ENGINEER DISTRICT
CORPS OF ENGINEERS
NEW YORK, NEW YORK

Designed by: JAL | Date: | Size: | Rev:
Dwn by: JAL | Ckd by: | Drawing file no.:
Reviewed by: | Drawing code:
Submitted by: | Plot date: 19-NOV-2004 16:03 | Plot by: dpierce | Scale: 100/0000/000000
File name: S:\Moson\military\Niagara Falls\FEA\MEP\Structural\MEPS_S-104.dgn

PN 58673
MILITARY ENTRANCE PROCESSING STATION (MEPS)
NIAGARA FALLS, NY

COLUMN SCHEDULE

Sheet reference number:
S–104

Plot Date: 19-NOV-2004 16:03
S:\Moson\military\Niagara Falls\FEA\MEP\Structural\MEPS_S-104.dgn
Submitted by: ejpetrowe
S:\Moson\military\Niagara Falls\FEA\MEP\Structural\MEPS_S-104.dgn

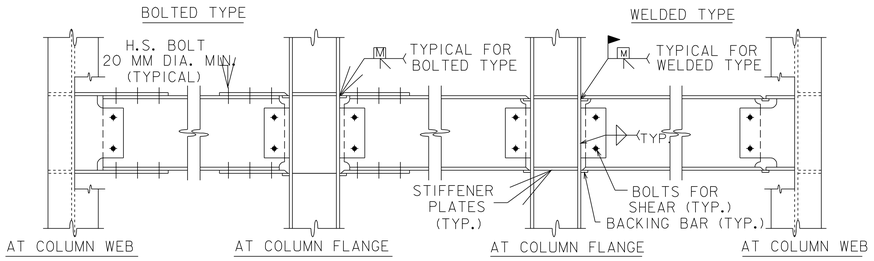

(THE CONTRACTOR HAS THE OPTION TO USE EITHER TYPE OF CONNECTION)

TYPICAL MOMENT CONNECTION DETAILS

NOT TO SCALE

NOTE: 1. CONTRACTOR SHALL DESIGN MOMENT CONNECTIONS TO FULL MOMENT CAPACITY OF THE BEAM.

2. CONTRACTOR SHALL DESIGN SHEAR CONNECTIONS TO FULL SHEAR CAPACITY OF THE BEAM.

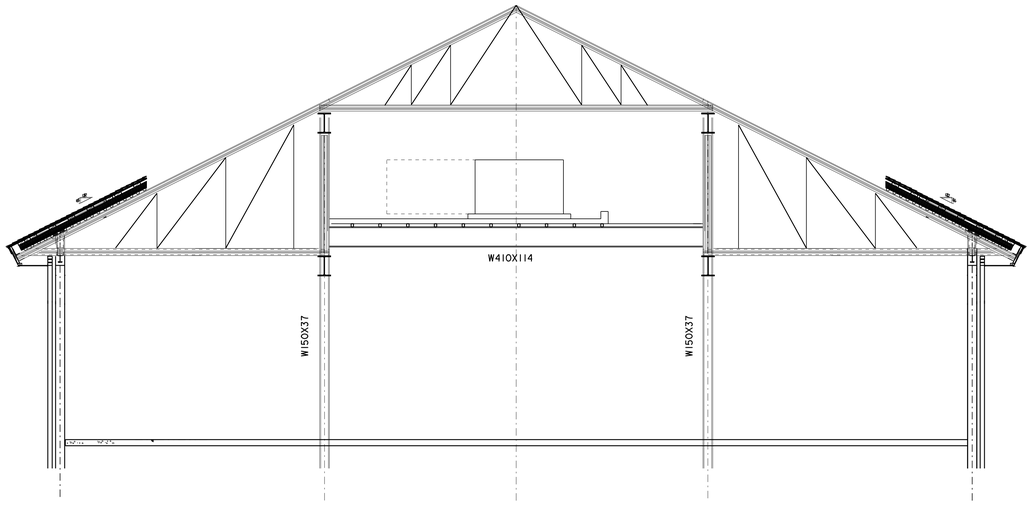

SECTION B (S107 | S105)

TYPICAL LIGHT GAUGE TRUSSES

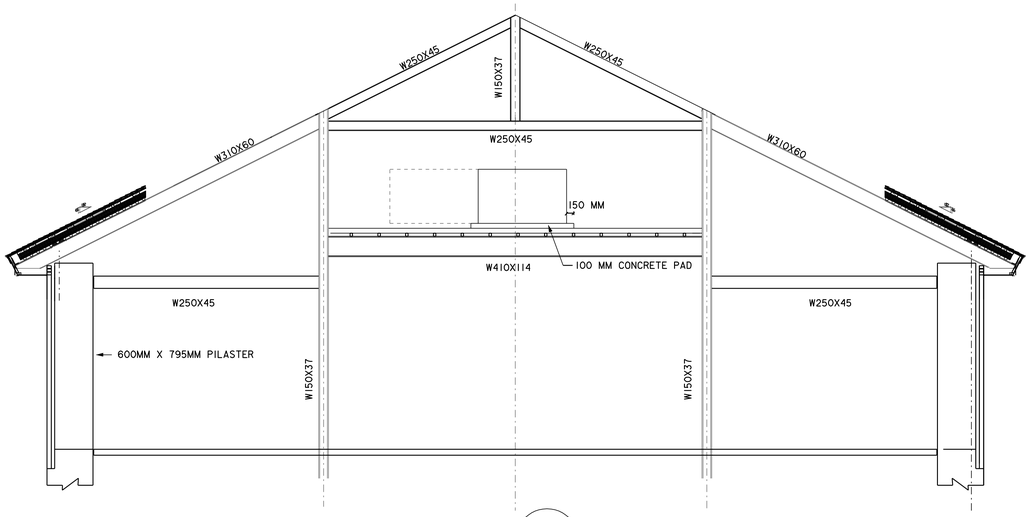

SECTION A (S107 | S105)

MOMENT FRAME A AND B SIMILAR

US Army Corps of Engineers
New York District

Symbol	Description	Date	Appr.
90% SUBMISSION		10/04/04	
90% SUBMISSION		08/09/04	
15% SUBMISSION		03/09/04	

U.S. ARMY ENGINEER DISTRICT
CORPS OF ENGINEERS
NEW YORK, NEW YORK

Designed by: JAL
Dwn by: JAL
Ckd by:
Reviewed by:
Submitted by:
Date:
Size:
Rev.
Drawing file no.:
Drawing code:
Plot date: 19-NOV-2004 16:03
Plot by: e3jehlmwe
Scale: 0/0000/0000/0000
File name: G:\Mercom\Military\Niagara Falls\MEPS\Structural\MEPS S-105.dgn

PN 56873
MILITARY ENTRANCE PROCESSING STATION (MEPS)
NIAGARA FALLS, NY

MISC. STEEL SECTIONS

Sheet reference number:
S–105

Submitted by: e3jehlmwe
pathfinder=Mercom\Military\Niagara Falls\MEPS\Structural\MEPS S-105.dgn Plot Date: 19-NOV-2004 16:03

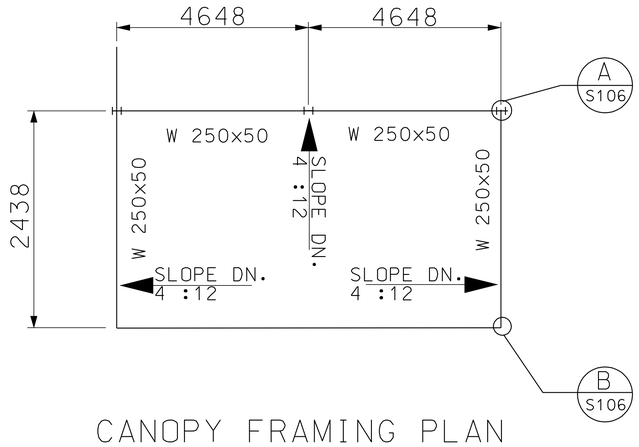

CANOPY FRAMING PLAN
REAR ENTRANCE

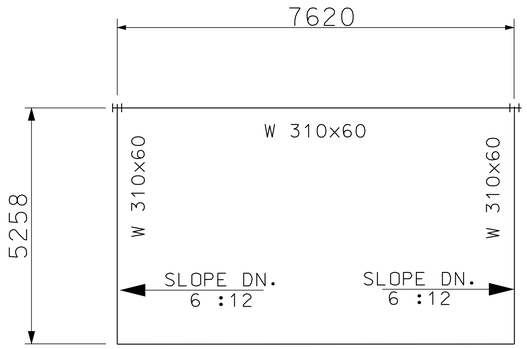

CANOPY FRAMING PLAN
FRONT ENTRANCE

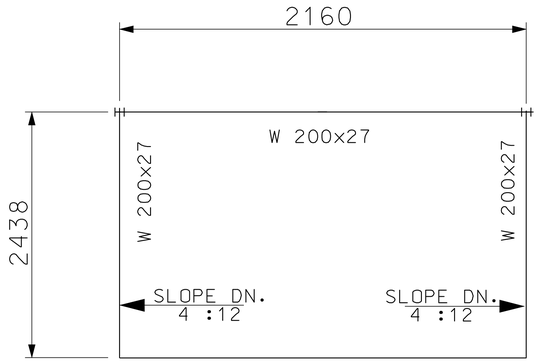

CANOPY FRAMING PLAN
SIDE ENTRANCES (SEE ARCH.)

FOOTING TYPE
760 mm X 760 mm X 150 mm
#19 @ 305 mm o.c.e.w.

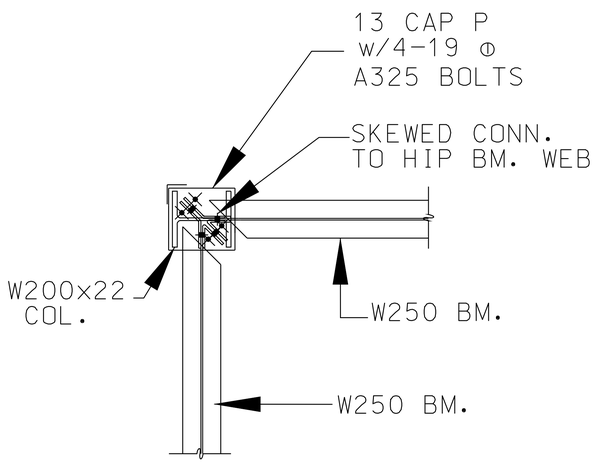

CONNECTION DETAIL (A S106)
SCALE: NTS

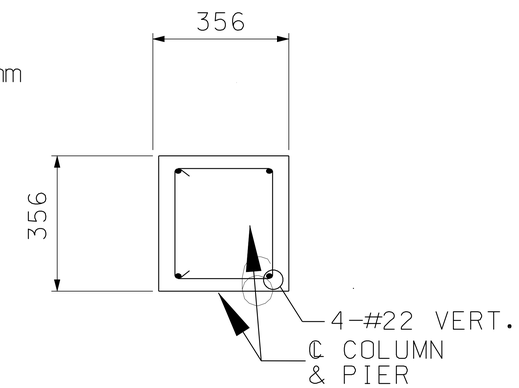

PIER TYPE
SCALE: NTS

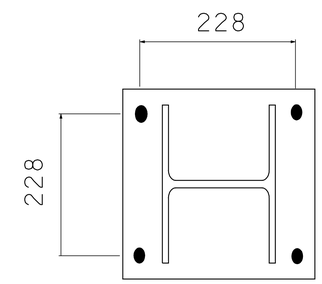

BASE PLATE DETAIL
SCALE: NTS

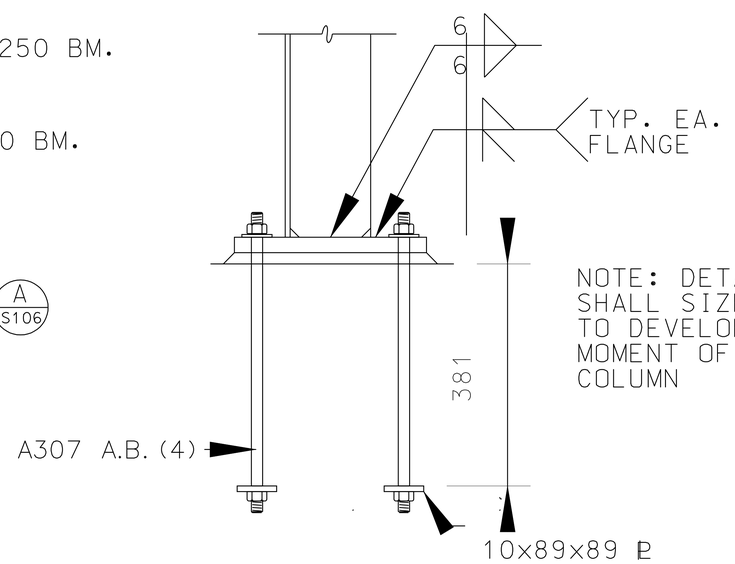

NOTE: DETAILER SHALL SIZE WELDS TO DEVELOP FULL MOMENT OF COLUMN

COLUMN BASE PLATE TYPE
SCALE: NTS

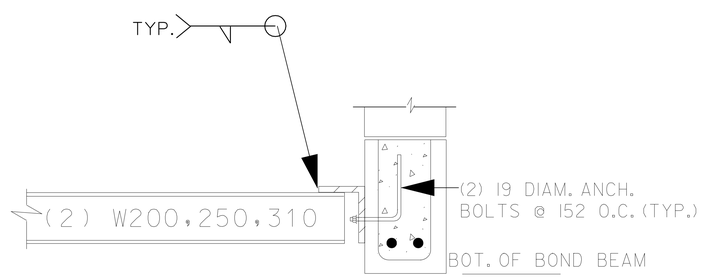

NOTES:
1. COORDINATE ALL ELEVATIONS WITH ARCH. DWGS.
2. FACING BRICK NOT SHOWN FOR CLARITY SEE ARCH. DWGS.
3. FULLY GROUT MASONRY EXTERIOR WALL AT CANOPY ANCHORAGE LOCATIONS, USE #22 BARS VERT. @ 203". EXTEND MIN. 2 CELLS ON EITHER SIDE OF ANCHORAGE BOLTS WHERE REQ'D. LINTELS MAY SERVE AS CANOPY ACHORAGE AS REQUIRED.

TYPICAL CANOPY ANCHORAGE DETAIL (B S106)
SCALE: NTS

US Army Corps of Engineers
New York District

Symbol	Description	Date	Appr.
	90% SUBMISSION	10/04/04	
	65% SUBMISSION	08/06/04	
	15% SUBMISSION	05/05/04	

Designed by: | Date: | Size: | Rev:
Dwn by: | Ckd by: | Drawing file no:
Reviewed by: | Drawing code:
Submitted by: | Plot date: 19-NOV-2004 16:03 | Plot by: ccjohnson | Size: 1000x1000mm
File name: S:\Niagara\Niagara Fall AFS\MEPS\Structural\MEPS S-106.dgn

U.S. ARMY ENGINEER DISTRICT
CORPS OF ENGINEERS
NEW YORK, NEW YORK

PN 58873
MILITARY ENTRANCE PROCESSING STATION (MEPS)
NIAGARA FALLS, NY

CANOPY DETAILS

Sheet reference number:
S-106

Submitted by: a31ptmwe
Plot Date: 19-NOV-2004 16:03
S:\Structural\Military\Figure 6 Fall AFS\MEPS\Structural\MEPS S-106.dgn

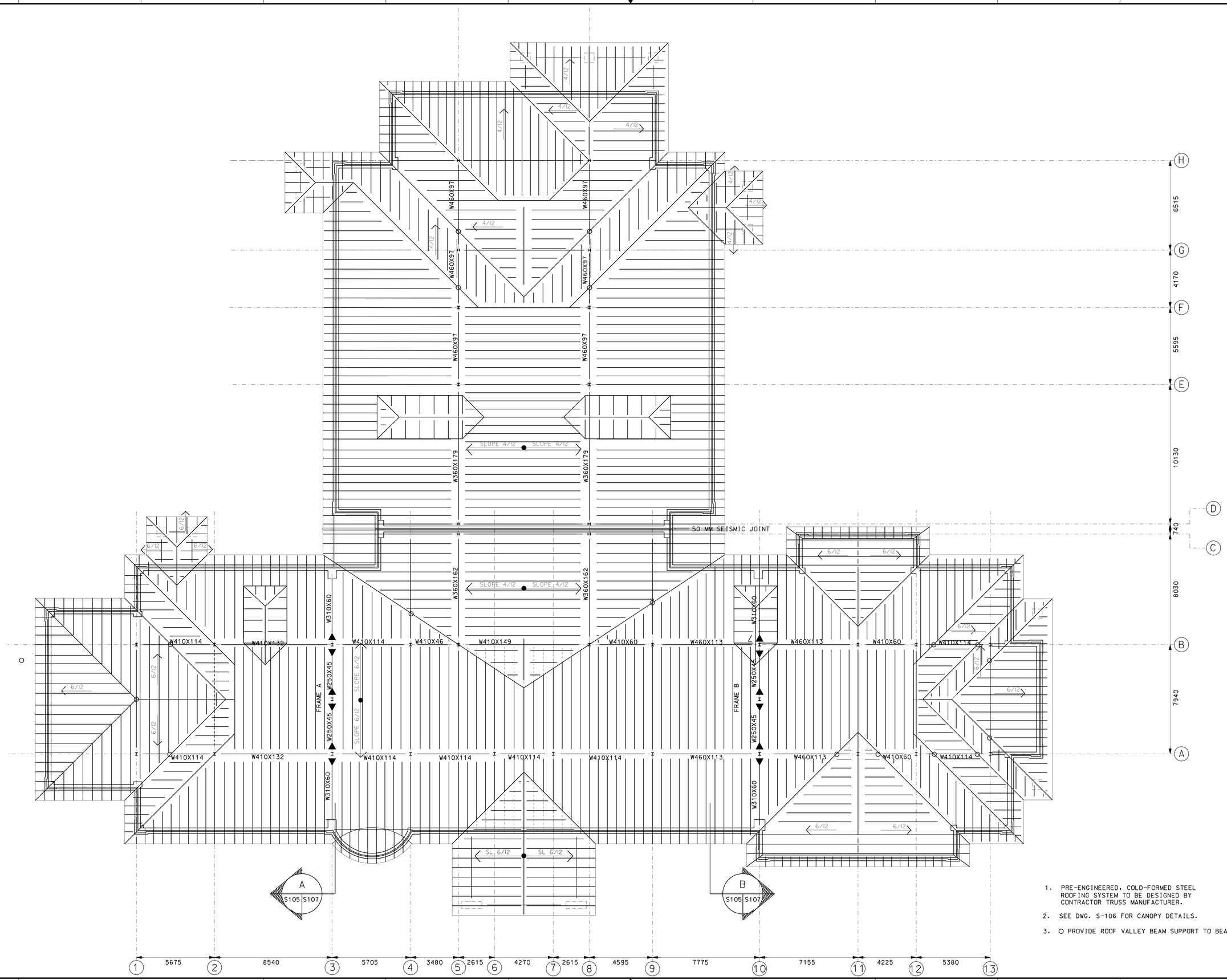

1. PRE-ENGINEERED, COLD-FORMED STEEL ROOFING SYSTEM TO BE DESIGNED BY CONTRACTOR TRUSS MANUFACTURER.
2. SEE DWG. S-106 FOR CANOPY DETAILS.
3. ○ PROVIDE ROOF VALLEY BEAM SUPPORT TO BEAM BELOW.

US Army Corps of Engineers
New York District

Symbol	Description	Date	Appr.
	90% SUBMISSION	10/04/04	
	30% SUBMISSION	06/01/04	
	15% SUBMISSION	03/05/04	

U.S. ARMY ENGINEER DISTRICT
CORPS OF ENGINEERS
NEW YORK, NEW YORK

Designed by: JAL
Dwn by: JAL
Ckd by:
Reviewed by:
Submitted by:
Date:
Size:
Rev:
Drawing file no.:
Drawing code:
Plot date: 19-NOV-2004 16:03
Plot by: adjetmwe
Scale: 100.000000:1.000000

File name: S:\Mission\military\Niagara Fall AFB\MEPS\Structural\MEPS S-107.dgn

PN 59873
MILITARY ENTRANCE PROCESSING STATION (MEPS)
NIAGARA FALLS, NY

ROOF FRAMING PLAN

Sheet reference number:
S-107

Submitted by: e3jetmwe
Plot Date: 19-NOV-2004 16:03
S:\Fileroom\military\Niagara Fall AFB\MEPS\Structural\MEPS S-107.dgn

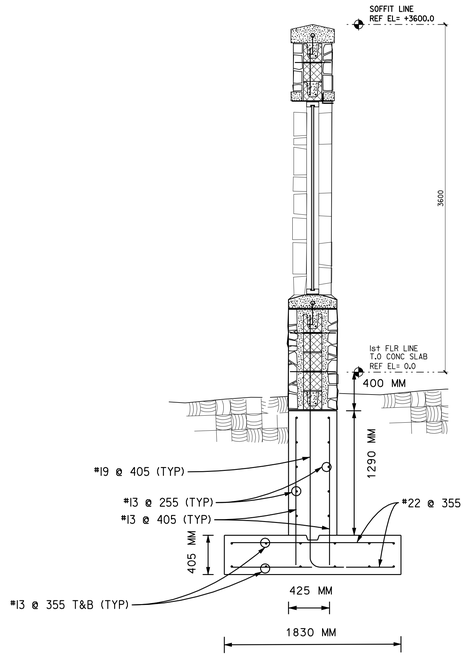

TYP. ENTRANCE WALL THRU. PLAQUE (A/108)
NOT TO SCALE

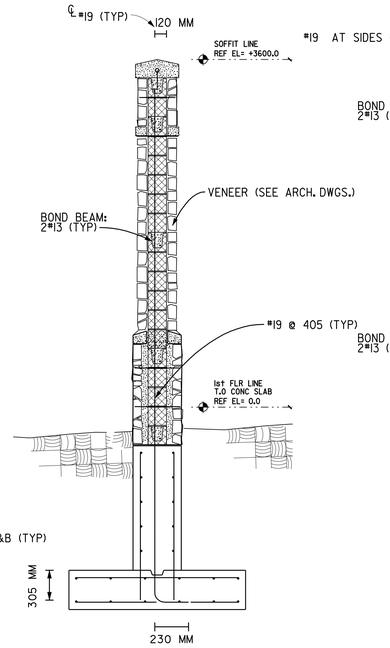

TYP. ENTRANCE WALL SECTION (B/108)
NOT TO SCALE

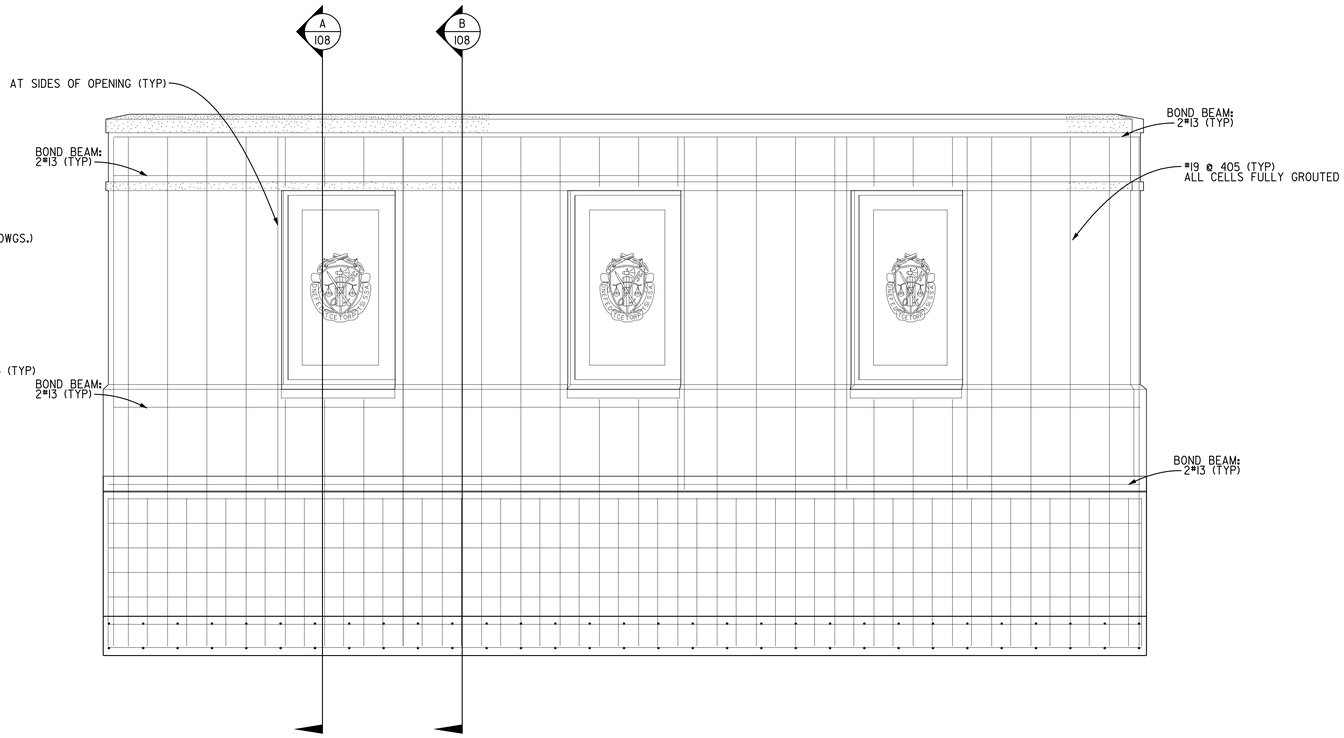

FRONT VIEW OF ENTRANCE WALL (OPPOSITE HAND SIMILAR) (X/108)
NOT TO SCALE

US Army Corps of Engineers
New York District

Symbol	Description	Date	Appr.
50% SUBMISSION		10/04/04	
90% SUBMISSION		09/09/04	
95% SUBMISSION		03/09/04	

U.S. ARMY ENGINEER DISTRICT
CORPS OF ENGINEERS
NEW YORK, NEW YORK

Designed by: DR
Dwn by: DR
Ckd by:
Reviewed by:
Submitted by:
Date:
Size:
Rev.:
Drawing file no.:
Drawing code:
Plot date: 19-NOV-2004 16:03
Plot by: eddenme
Plan no: 100/000/000/000
File name: S:\Benson\military\Niagara Falls\MEPS\Structural\MEPS S-108.dgn

PN 58873
MILITARY ENTRANCE PROCESSING STATION (MEPS)
NIAGARA FALLS, NY

MASONRY DETAILS

Sheet reference number:
S–108

Submitted by: eddenme
Plot Date: 19-NOV-2004 16:03
Saved: admin\military\Niagara Falls AFB\MEPS\Structural\MEPS S-108.dgn

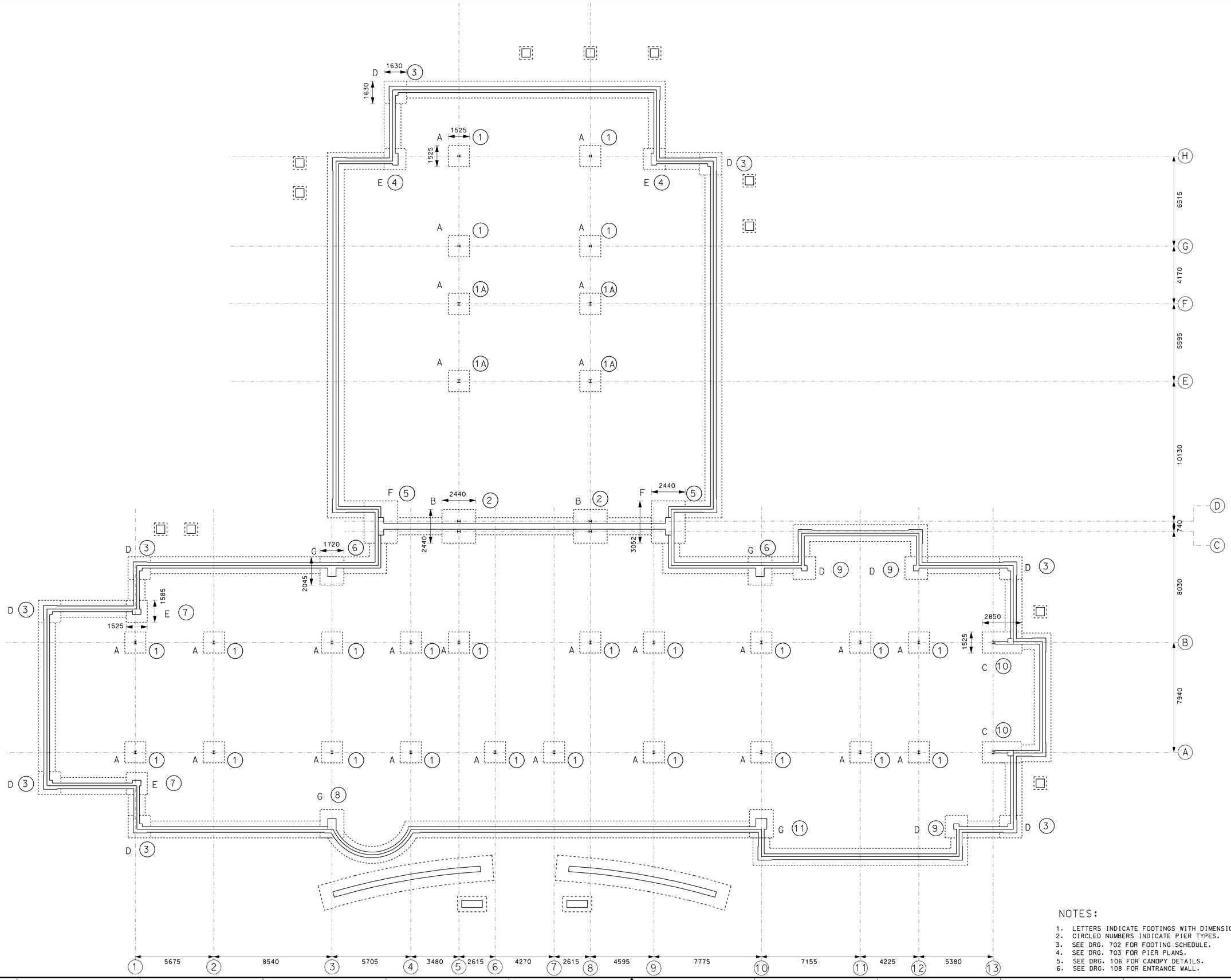

NOTES:

1. LETTERS INDICATE FOOTINGS WITH DIMENSIONS.
2. CIRCLED NUMBERS INDICATE PIER TYPES.
3. SEE DRG. 702 FOR FOOTING SCHEDULE.
4. SEE DRG. 703 FOR PIER PLANS.
5. SEE DRG. 106 FOR CANOPY DETAILS.
6. SEE DRG. 108 FOR ENTRANCE WALL.

US Army Corps of Engineers
New York District

Symbol	Description	Date	Appr.
	90% SUBMISSION	10/04/04	
	30% SUBMISSION	06/01/04	
	15% SUBMISSION	03/05/04	

U.S. ARMY ENGINEER DISTRICT
CORPS OF ENGINEERS
NEW YORK, NEW YORK

Designed by: JJL
Dwn by: JJL
Ckd by:
Reviewed by:
Submitted by:
Date:
Size:
Drawing file no.:
Drawing code:
Plot date: 19-NOV-2004 16:04
Plot by: e3jetmwe
Scale: 100.000000:1.000000
File name: S:\Niagara\military\Niagara Fall AFB\MEPS\Structural\MEPS S-701.dgn

PN 58673
MILITARY ENTRANCE PROCESSING STATION (MEPS)
NIAGARA FALLS, NY

FOUNDATION PLAN

Sheet reference number:
S–701

Submitted by: e3jetmwe
Plot Date: 19-NOV-2004 16:04
S:\Niagara\military\Niagara Fall AFB\MEPS\Structural\MEPS S-701.dgn

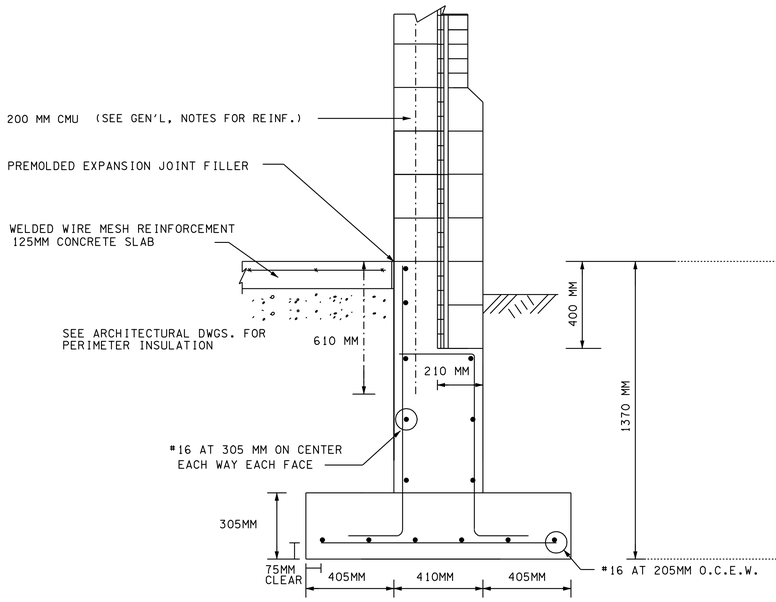

TYPICAL
EXTERIOR WALL
AND FOOTING

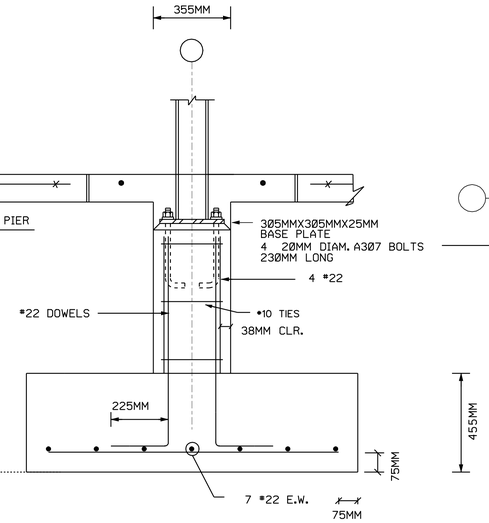

TYPICAL
FOOTING "A" - PIER "1"

PIER "1A" SIZE 405MM X 405 MM
PIER "1A" SAME REINFORCING

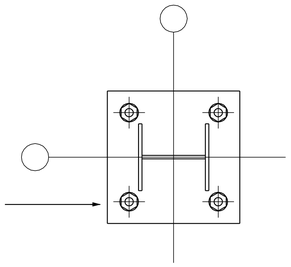

BASE PLATE PLAN

FOOTING TYPE	SIZE (MM)	REINFORCEMENT
A	1525X1525	7 #22 E.W.
B	2440X2440	10 #25 E.W.
C	2850X1525	12 #25 – 7 #25
D	1630X1630	7 #22 E.W.
E	1585X1525	7 #22 E.W.
F	3052X2440	13 #25 – 10 #25
G	2045X1720	9 #25 – 8 #25
THICKNESS A, D, E – 460 MM		
THICKNESS B, C, F, G – 610 MM		

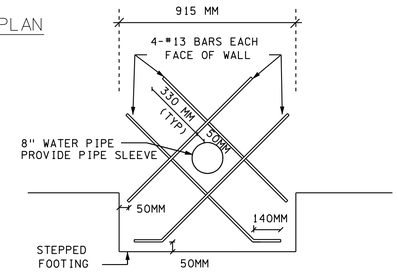

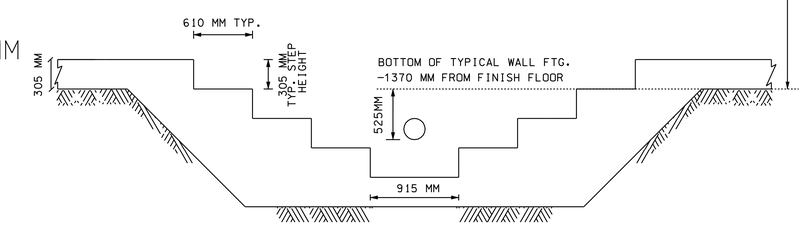

FINAL ELEVATION OF WATER PIPE TO BE VERIFIED

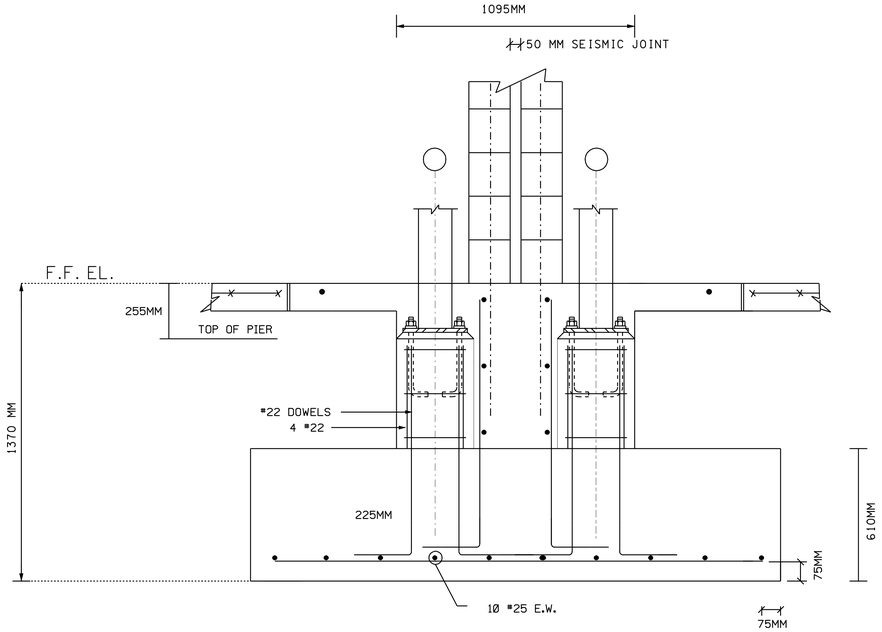

TYPICAL
FOOTING "B" - PIER "2"
AT SEISMIC JOINT

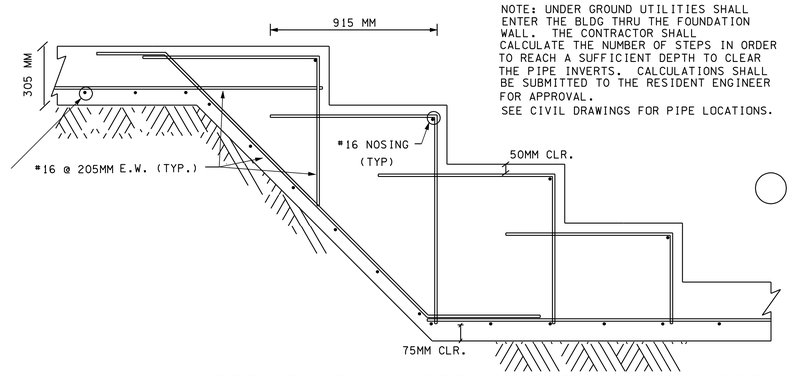

NOTE: UNDER GROUND UTILITIES SHALL ENTER THE BLDG THRU THE FOUNDATION WALL. THE CONTRACTOR SHALL CALCULATE THE NUMBER OF STEPS IN ORDER TO REACH A SUFFICIENT DEPTH TO CLEAR THE PIPE INVERTS. CALCULATIONS SHALL BE SUBMITTED TO THE RESIDENT ENGINEER FOR APPROVAL.
SEE CIVIL DRAWINGS FOR PIPE LOCATIONS.

STEP FOOTING DETAIL AT WATER PIPE
N.T.S.

NOTES:

1. INTERSECTING FOUNDATION WALLS AND WALL FOOTINGS, WHERE APPLICABLE, ARE NOT SHOWN FOR CLARITY, WHERE THIS CONDITION OCCURS, EXTEND CONTINUOUS WALL FOOTING BARS MIN. 305 MM INTO THE SPREAD FOOTING AND RUN HORIZ. WALL REINFORCEMENT THROUGH THE PIER.

US Army Corps of Engineers
New York District

Symbol	Description	Date	Appr.
90% SUBMISSION		10/04/04	
100% SUBMISSION		08/09/04	
65% SUBMISSION			

Designed by: JAL
Dwn by: JAL
Ckd by:
Reviewed by:
Submitted by:
Date:
Size
Rev:
Drawing file no.:
Drawing code:
Plot date: 19-NOV-2004 16:04
Plot by: ddenman
Scale: no scale/0000000

U.S. ARMY ENGINEER DISTRICT
CORPS OF ENGINEERS
NEW YORK, NEW YORK

File name: S:\Mission\military\Niagara Falls\FUTS\MEPS\Structural\MEPS S-702.dgn

PN S8673
MILITARY ENTRANCE PROCESSING STATION (MEPS)
NIAGARA FALLS, NY

FOUNDATION
SECTIONS

Sheet reference number:
S–702

Plot Date: 19-NOV-2004 16:04
Plot by: ddenman
Plot Scale: no scale/0000000
Submitted by: e3jamtwe
S:\Mission\military\Niagara Falls\FUTS\MEPS\Structural\MEPS S-702.dgn

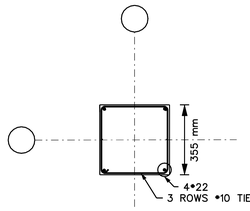

PIER 1

PIER 1A 405MMX405MM SAME REINFORCING

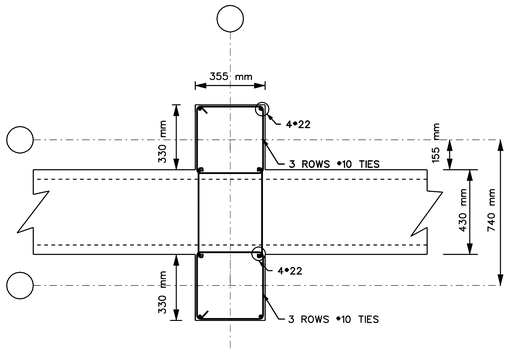

PIER 2

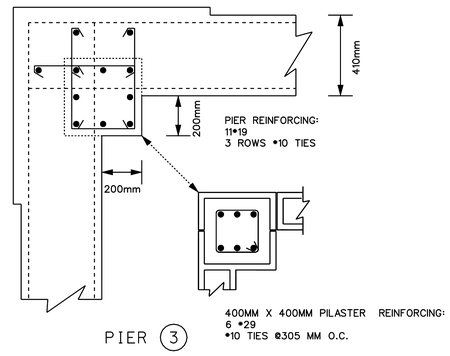

PIER 3

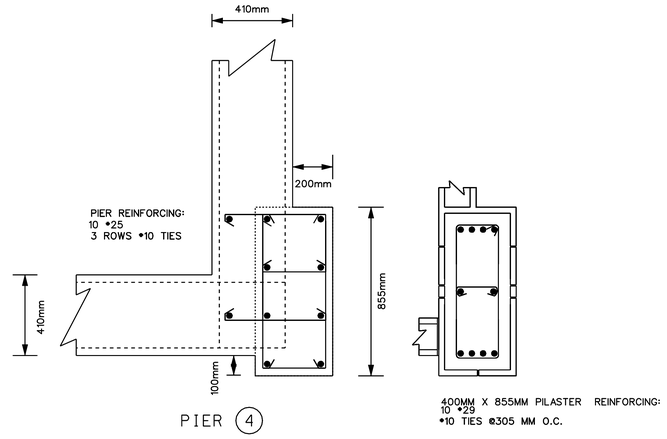

PIER 4

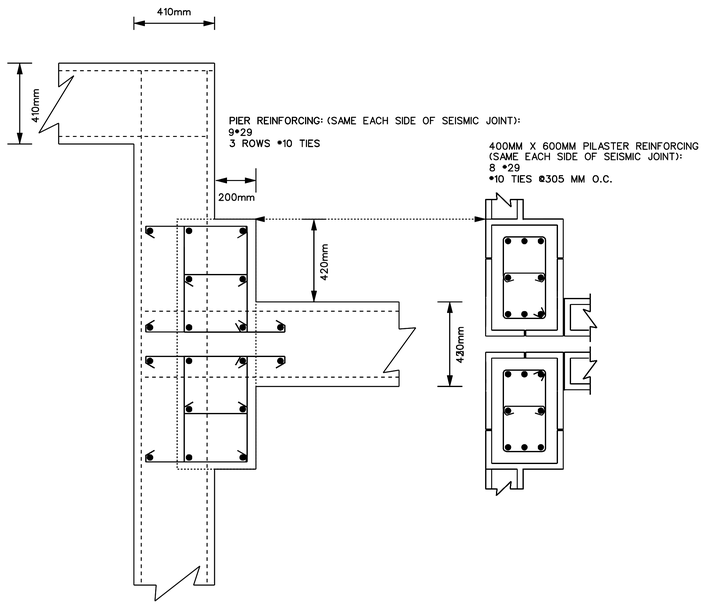

PIER 5

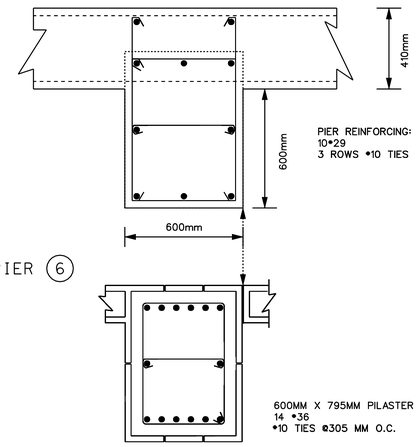

PIER 6

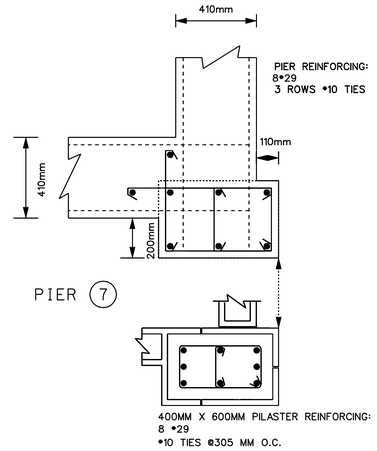

PIER 7

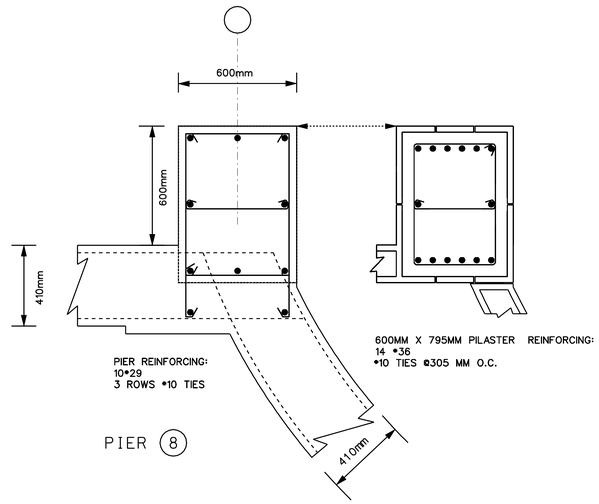

PIER 8

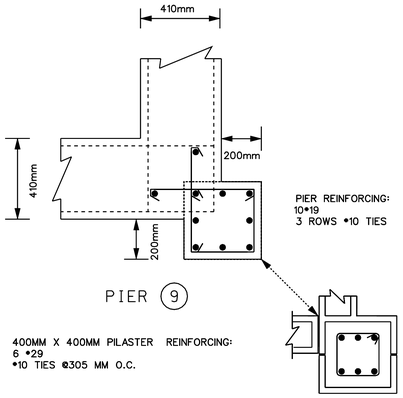

PIER 9

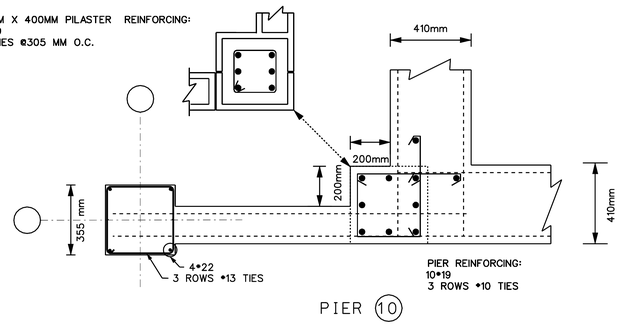

PIER 10

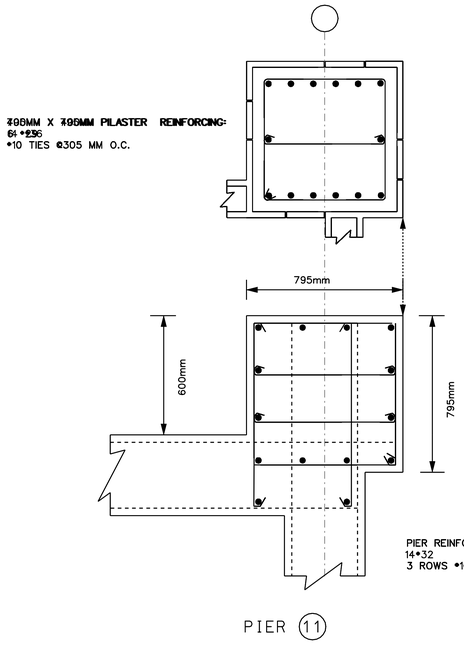

PIER 11

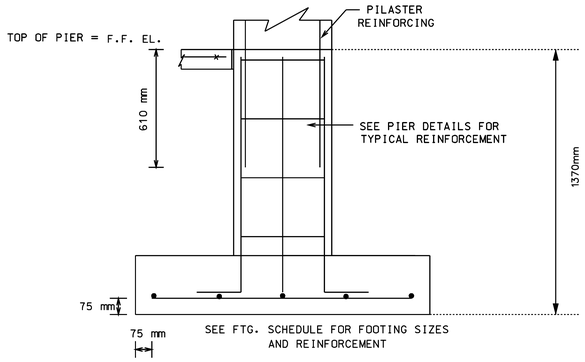

PILASTER, PIER AND FOOTING

NOTES:

1. INTERSECTING FOUNDATION WALLS AND WALL FOOTINGS ARE NOT SHOWN FOR CLARITY. WHERE THIS CONDITION OCCURS, EXTEND CONTINUOUS WALL FOOTING BARS MIN. 12″ INTO THE SPREAD FOOTING AND RUN HORIZONTAL WALL REINFORCEMENT THROUGH THE PIER.
2. FOOTING SIZE CALLED FOR IN THE FOOTING SCHEDULE IS BASED ON THE FOOTING CENTERED WITH THE COLUMN CENTERLINES EXCEPT WHERE NOTED.

US Army Corps of Engineers
New York District

Symbol	Description	Date	Appr.
80%	SUBMISSION	10/04/04	
95%	SUBMISSION	09/30/04	
35%	SUBMISSION	08/09/04	

Designed by: JAL	Date:	Size:	Rev.:
Dwn by: JAL	Ckd by:	Drawing file no.:	
		Drawing code:	
Reviewed by:		Plot date: 19-NOV-2004 16:04	
Submitted by:		Plot by: e3jemwe	
		Scale: 1/2000000000	

U.S. ARMY ENGINEER DISTRICT
CORPS OF ENGINEERS
NEW YORK, NEW YORK

File name: S:\Verizon\Niagara\Niagara_Fall\MILMEPS\Structural\MEPS S-703.dgn

PN: 59873
MILITARY ENTRANCE PROCESSING STATION (MEPS)
NIAGARA FALLS, NY

PIER WITH PILASTER PLANS

Sheet reference number:
S–703

Plot Date: 19-NOV-2004 16:04
Plot by: e3jemwe
Submitted by: e3jemwe
petter-coastal\projects\niagara fall #f3940f\structural\MEPS S-703.dgn

MECHANICAL DRAWING ABBREVIATIONS AND SYMBOLS (HVAC)

ABBREVIATIONS

A

ADDIT	ADDITIVE
ACS	AUTOMATIC CONTROL SYSTEM
ACU-1	AIR CONDITIONING UNIT (UNIT No. 1)
AD	ACCESS DOOR
AF	AIR FILTER
AFF	ABOVE FINISHED FLOOR
AHU-1	AIR HANDLING UNIT (UNIT No. 1)
AL	ACOUSTIC LINING
ALUM	ALUMINUM
AMCS	AUTOMATED MONITORING CONTROL SYSTEM
AP	ACCESS PANEL
ACC SEC	ACCESS SECTION
ATC	AUTOMATIC TEMPERATURE CONTROL
AS-1	AIR SEPARATOR (UNIT No.1)
AS	ACOUSTICAL SILENSER
AV	AUTOMATIC VENT
APD	AIR PRESSURE DIFFERENTIAL

B

BG	BOTTOM GRILLE
BW	BRAKE WATTS
BR	BOTTOM REGISTER
BT	BOTTOM THROAT
BDD	BACK DRAFT DAMPER
B-1	BOILER NO.1

C

C	CELISUS
CC	COOLING COIL
CD	CEILING DIFFUSER
CLD	CEILING LINEAR DIFFUSER
CLR	CEILING LINEAR REGISTER
CG	CEILING GRILLE
CH-1	CHILLER NO. 1
CHWP-1	CHILLED WATER PUMP (UNIT No. 1)
CHWR	CHILLED WATER RETURN
CHWS	CHILLED WATER SUPPLY
CS	CIRCUIT SETTER
CLG	CEILING
CMS	CUBIC METERS PER SECOND
COMPR	COMPRESSOR
COND	CONDENSATE
CONN	CONNECT, CONNECTION
CONV	CONVERTER
CPA	CONTROL POINT ADJUST
CP-1	CIRCULATING PUMP (UNIT No. 1)
CR	CEILING REGISTER
CU	COPPER
CUH-1	CABINET UNIT HEATER (UNIT NO.1)
CU-1	CONDENSING UNIT (UNIT NO.1)
CWP-1	CONDENSER WATER PUMP (UNIT No. 1)
CAP	CAPACITY
CENT.	CENTRIFUGAL
CF-1	CHEMICAL FEEDER (UNIT No. 1)
CV-A	CONVECTOR TYPE A
CW	COLD WATER
CRU-1	CONDENSATE RETURN UNIT (NO.1)
CHWS	CHILLED HOT WATER SUPPLY
CHWR	CHILLED HOT WATER RETURN
CHWRR	CHILLED HOT WATER REVERSE RETURN
CWS	CHILLED WATER SUPPLY
CWR	CHILLED WATER RETURN

D

D	DROP , DAMPER
DB	DRY BULB
DHU	DEHUMIDIFIER
DHW-1	DOMESTIC HOT WATER (UNIT No. 1)
DIAM	DIAMETER
DN	DOWN
DPC	DIFFERENTIAL PRESSURE CONTROLLER
DWG	DRAWING
DX-1	DIRECT EXPANSION (UNIT No. 1)
DMPR	DAMPER

E

EA	EACH
EAT	ENTERING AIR TEMPERATURE
EDB	ENTERING DRY BULB TEMPERATURE
EDR	EQUIVALENT DIRECT RADIATION
EF-1	EXHAUST FAN (UNIT No. 1)
EL	ELEVATION
ELEC	ELECTRIC
ENT	ENTERING
ET-1	EXPANSION TANK (UNIT No. 1)

E

EQ	EQUAL
ET-1	EXPANSION TANK (UNIT No. 1)
EWB	ENTERING WET BULB
EWT	ENTERING WATER TEMPERATURE
EXH	EXHAUST
EXP	EXPANSION
E.J.	EXPANSION JOINT

F

F	FILTER
F&T	FLOAT AND THERMOSTATIC
FA	FREE AREA (SQ METERS)
FC	FLEXIBLE CONNECTION
FD	FIRE DAMPER
FF	FINAL FILTER
FG	FINISHED GRADE
FIN FL	FINISHED FLOOR
FND	FOUNDATION DRAIN
FEC	FIRE EXTINGUISHER CABINET
FPLM	FINS PER LINEAR METER
FPS	FEET PER SECOND
FT-1	FIN TUBE RADIATION (TYPE FT-1)
FV	FACE VELOCITY
FMS	FLOW MEASURING STATION

G

GA	GROSS AREA
GMT-1	GLYCOL MAKEUP TANK (UNIT No. 1)
GX	GENERAL EXHAUST
GFE	GOVERNMENT FURNISHED EQUIPMENT
GR	HOT WATER/30% GLYCOL RETURN
GS	HOT WATER/30% GLYCOL SUPPLY
GSP	GLYCOL SOLUTION PUMP

H

H	HEIGHT
HC-1	HEATING COIL (UNIT No. 1)
HC EWC	HANDICAP ELECTRIC WATER COOLER
HD	HEAVY DUTY
HOA	HAND/OFF/AUTO
HR	HOUR
HS	HIGH SPEED
HTG	HEATING
HUM	HUMIDIFIER
HWP-1	HOT WATER PUMP (UNIT No. 1)
HV	HEATING AND VENTILATING
HX	HEAT EXCHANGER
HZ	HERTZ
H STAT	HUMIDISTAT
HWS	HOT WATER SUPPLY (HEATING)
HWR	HOT WATER RETURN (HEATING)

I

ID	INSIDE DIAMETER
IPS	IRON PIPE SIZE

K

KW	KILOWATT
KH-1	KITCHEN HOOD NO.1
KG/MM2	KILOGRAMS PER MILLIMETERS SQUARED

L

L	LITERS
LAT	LEAVING AIR TEMPERATURE
LCP	LOCAL CONTROL PANEL
LCV	LEVEL CONTROL VALVE
LD	LINEAR DIFFUSER
LDB	LEAVING DRY BULB TEMPERATURE
LIN M	LINEAR METERS
LPH	LITERS PER HOUR
LS	LOW SPEED
L/S	LITERS PER SECOND
LVG	LEAVING
LWB	LEAVING WET BULB TEMPERATURE
LWT	LEAVING WATER TEMPERATURE

M

M	METER
M/S	METERS PER SECOND
MAU	MAKE-UP AIR UNIT
MAX	MAXIMUM
MCC	MOTOR CONTROL CENTER
MD	MOTORIZED DAMPER
MER	MECHANICAL EQUIPMENT ROOM
MW	MOTOR WATTS
MIM	MINIMUM
MOT	MOTOR
MTG	MOUNTING
MXB	MIXING BOX
MUW	MAKE UP WATER
MM	MILLIMETER

N

NC	NORMALLY CLOSED
NIC	NOT IN CONTRACT
NO	NORMALLY OPEN
NPSH	NET POSITIVE SUCTION HEAD
NTS	NOT TO SCALE

O

OA	OUTSIDE AIR
OAI	OUTSIDE AIR INTAKE
OD	OUTSIDE DIAMETER
OV	OUTLET VELOCITY
OPER	OPERATOR, OPERATING
OPNG	OPENING

P

P-1	PUMP NO. 1
Pa	PASCALS
PD	PRESSURE DROP
PF	PREFILTER
PG	PRESSURE GAUGE
PHC	PREHEAT COIL
PHWP-1	PRIMARY HOT WATER PUMP (UNIT No. 1)
PRV	PRESSURE REDUCING VALVE
PVC	POLYVINYL CHLORIDE
PH	PHASE
PRESS	PRESSURE

R

R	RISE
RA	RETURN AIR
RAD	RADIATION
REL AIR	RELIEF AIR
REFR	REFRIGERANT
RF	RETURN FAN
RFP-1	RADIANT FLOOR PUMP (UNIT No. 1)
RH	RELATIVE HUMIDITY
RHC	REHEAT COIL
RM	ROOM
ROH	RELIEF/OUTLET HOOD
ROT	ROTATION
RPF	ROLL PREFILTER
RPS	REVOLUTIONS PER SECOND
RR	RETURN REGISTER
RECVR.	RECEIVER
RHWS	RADIANT HOT WATER SUPPLY
RHWR	RADIANT HOT WATER RETURN
RHWRR	RADIANT HOT WATER REVERSE RETURN

S

SA	SUPPLY AIR
SC	SPOT COOLER
SF	SUPPLY FAN
SP	STATIC PRESSURE
SPS	STATIC PRESSURE SENSOR
SPEC	SPECIFICATION
STGS	STAGES
SS	STAINLESS STEEL
SUCT	SUCTION
SMK D.	SMOKE DAMPER
SMK/FD	COMBINATION SMOKE & FIRE DAMPER

T

T	THROAT
TA	THROW AWAY
TA	TRANSFER AIR
TDH	TOTAL DYNAMIC HEAD
TEMP	TEMPERATURE
TF	TERMINAL FILTER
TC-1	TEMPERING COIL NO. 1
TG	TRANSFER GRILL
TG	TOP GRILLE
TR	TOP REGISTER
TRF	TRANSFER FAN
TRG	TRANSFER GRILLE
TS	TIP SPEED
(T) STAT	THERMOSTAT
TT	TOP THROAT
TV	TURNING VANES
TYP	TYPICAL
TX	TOILET EXHAUST
TC	TEMPERATURE CONTROL SENSOR
(TC)	TEMPERATURE CONTROLLER
[T]	TEMPERATURE INDICATION

U

UH-1	UNIT HEATER (UNIT UH-1)

V

V	VOLTS
VAV-1	VARIABLE AIR VOLUME (UNIT No. 1)
VFD	VARIABLE FREQUENCY DRIVE
VIV	VARIABLE INLET VANES
VD	VOLUME DAMPER
VI	VIBRATION ISOLATORS

W

W	WATTS
W/	WITH
W/O	WITHOUT
WB	WET BULB
WC	WATER COLUMN
WG	WATER GAUGE
WMS	WIRE MESH SCREEN
WP	WORKING PRESSURE, WEATHER PROOF
WPD	WATER PRESSURE DROP
WT	WEIGHT

SYMBOLS

SYMBOL	DESCRIPTION
	SUPPLY DUCT UP
	SUPPLY DUCT DOWN
	EXHAUST OR RETURN DUCT UP
	EXHAUST OR RETURN DUCT DOWN
	FLEXIBLE CONNECTOR
	SUPPLY AIR REGISTER (ARROW INDICATE TYPE 2-WAY, 3-WAY OR 4-WAY)
	CEILING AIR DIFFUSER (4-WAY) THROW UNLESS OTHERWISE NOTED)
	RETURN AIR REGISTER
	TURNING VANES
MD	MOTORIZED DAMPER
FD	FIRE DAMPER
VD	VOLUME DAMPER
	AUTOMATIC VENT
	MANUAL VENT
	DIRECTION OF FLOW
PRV	PRESSURE REDUCING VALVE
	GATE VALVE
	GLOBE VALVE
	IN-LINE STRAINER W/GATE VALVE & CAPPED PIPE
	IN-LINE STRAINER
	CIRCUIT SETTER
	CONTROL VALVE (2-WAY)
	CONTROL VALVE (3-WAY), CHANGE-OVER VALVE
	RELIEF VALVE
PDC	PRESSURE DIFFERENTIAL CONTROLLER
	TEMP & PRESS RELIEF VALVE
P	PRESSURE GAUGE WITH COCK
	BALANCING COCK
	FLEXIBLE PIPE CONNECTION
	REDUCER (ECCENTRIC), FLAT ON TOP
	CONCENTRIC REDUCER/INCREASER
	COMBINATION BALANCING & SHUT OFF VALVE
	PIPE GUIDE
	ANCHOR
	UNION
	UNDERCUT DOOR
	LOUVER DOOR

SYMBOL	DESCRIPTION
(1)	LINEAR DIFFUSER (TAG No. 1)
(1)	GRILLE/DIFFUSER/REGISTER (TAG No. 1)
	EXPANSION JOINT
	POINT OF CONNECTION
(H)	HUMIDISTAT
(S)	SENSOR
(T)	THERMOSTAT
[T]	TEMPERATURE INDICATOR
[R]	TEMPERATURE RESET INTERFACE
(TC)	TEMPERAURE CONTROLLER
	ACOUSTICALLY LINED DUCT
	LINEAR SLOT DIFFUSER
	IN-LINE PUMP
	UNIT HEATER
— CHWS —	CHILLED WATER SUPPLY
— CHWR —	CHILLED WATER RETURN
— COND —	CONDENSATE
— HWS —	HOT WATER SUPPLY
— HWR —	HOT WATER RETURN
— RL —	REFRIGERANT LIQUID
— RG —	REFRIGERANT GAS

NOTE:
THIS IS A GENERAL LIST OF ABBREVIATIONS AND SYMBOLS. NOT ALL ENTRIES MAY APPLY TO THIS PROJECT.

US Army Corps of Engineers
New York District

Symbol	Description	Date	App.
	80% SUBMISSION	10/10/04	
	90% SUBMISSION	10/30/04	
	95% SUBMISSION	03/30/04	

U.S. ARMY ENGINEER DISTRICT
CORPS OF ENGINEERS
NEW YORK, NEW YORK

Designed by: | Date: | Size: | Rev.
Dwn by: | Ckd by: | Drawing file no.:
Reviewed by: | Drawing code:
Submitted by: | Plot date: 19-NOV-2004 16:02 | Plot by: ADMIN-me | Scale: 2:1000000000000

File name: S:\Services\military\Niagara_Falls\FE\MEPS\Mechanical\M001.dgn

MILITARY ENTRANCE PROCESSING STATION (MEPS)
NIAGARA FALLS, NY
PN 59873

SYMBOLS & ABBREVIATIONS HVAC

Sheet reference number:
M-001

Submitted by: e3jetmwe
Plot Date: 19-NOV-2004 15:52
Plot Scale: 1.000000000000000000
Plot Driver: pmhpgl.pmd
Cell Name: ATBANE
Design File: S:\Services\military\Niagara_Falls\FE\MEPS\Mechanical\M001.dgn

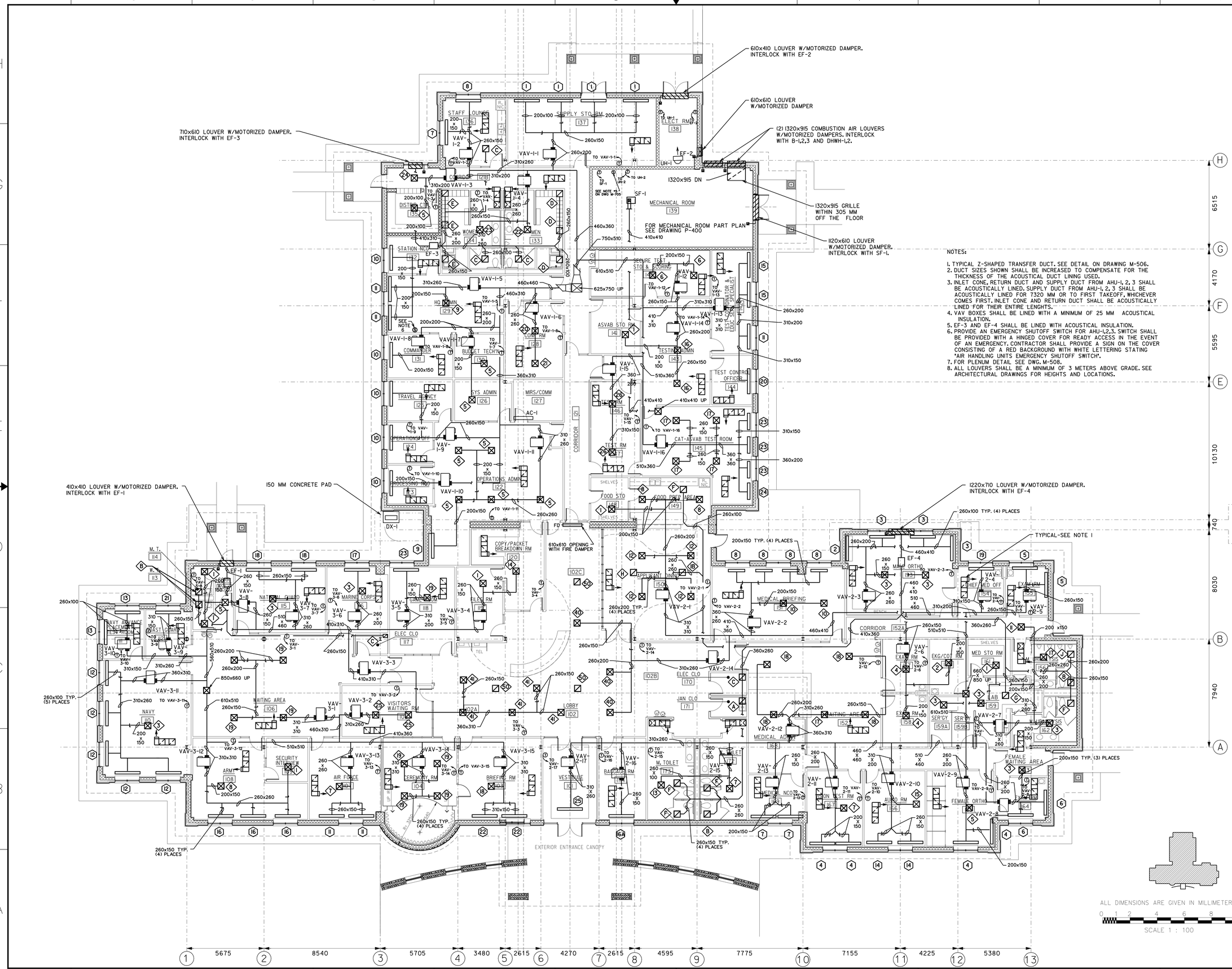

NOTES:

1. TYPICAL Z-SHAPED TRANSFER DUCT. SEE DETAIL ON DRAWING M-506.
2. DUCT SIZES SHOWN SHALL BE INCREASED TO COMPENSATE FOR THE THICKNESS OF THE ACOUSTICAL DUCT LINING USED.
3. INLET CONE, RETURN DUCT AND SUPPLY DUCT FROM AHU-1, 2, 3 SHALL BE ACOUSTICALLY LINED. SUPPLY DUCT FROM AHU-1, 2, 3 SHALL BE ACOUSTICALLY LINED FOR 7320 MM OR TO FIRST TAKEOFF, WHICHEVER COMES FIRST. INLET CONE AND RETURN DUCT SHALL BE ACOUSTICALLY LINED FOR THEIR ENTIRE LENGHTS.
4. VAV BOXES SHALL BE LINED WITH A MINIMUM OF 25 MM ACOUSTICAL INSULATION.
5. EF-3 AND EF-4 SHALL BE LINED WITH ACOUSTICAL INSULATION.
6. PROVIDE AN EMERGENCY SHUTOFF SWITCH FOR AHU-1,2,3. SWITCH SHALL BE PROVIDED WITH A HINGED COVER FOR READY ACCESS IN THE EVENT OF AN EMERGENCY. CONTRACTOR SHALL PROVIDE A SIGN ON THE COVER CONSISTING OF A RED BACKGROUND WITH WHITE LETTERING STATING "AIR HANDLING UNITS EMERGENCY SHUTOFF SWITCH".
7. FOR PLENUM DETAIL SEE DWG. M-508.
8. ALL LOUVERS SHALL BE A MINIMUM OF 3 METERS ABOVE GRADE. SEE ARCHITECTURAL DRAWINGS FOR HEIGHTS AND LOCATIONS.

US Army Corps of Engineers
New York District

Symbol	Description	Date	App.
	90% SUBMISSION	10/04/04	
	100% SUBMISSION	03/09/04	
	95% SUBMISSION	03/05/04	

U.S. ARMY ENGINEER DISTRICT
CORPS OF ENGINEERS
NEW YORK, NEW YORK

Designed by: | Date: | Size: | Rev.:
Dwn by: | Ckd by: | Drawing file no.:
Reviewed by: | Drawing code:
Submitted by: | Plot date: 19-NOV-2004 15:52 | Plot by: eajetmee | Date: 100-M0506100000
File name: S:\Mission\Military\Niagara Fall\FEB\MEP\Mechanical\MEPS M-100.dgn

PN 59873
MILITARY ENTRANCE PROCESSING STATION (MEPS)
NIAGARA FALLS, NY

FLOOR PLAN DUCTWORK

Sheet reference number:
M–100

Submitted by: eajetmee
Sattlerdocsmilitary\Niagara Fall\FEB\MEP\Mechanical\MEPS M-100.dgn
Plot Date: 19-NOV-2004 15:52

NOTES:

1. RADIANT FLOOR HEATING SHALL BE PROVIDED AS AN OPTION. SEE DETAIL ON DRAWING M-505.
2. ZIPHANY SHALL PROVIDE AND INSTALL A COMPLETE SYSTEM WHICH INCLUDES A GAS METER WITH PULSE TRANSMITTER, ELECTRIC POWER METER, Z-BOX TRANSMITTER WITH WEATHERPROOF ENCLOSURE AND ANTENNA. ALL WIRING FROM THE Z-BOX TRANSMITTER TO THE GAS AND ELECTRIC METERS TRANSMITTERS, ETC. ALL WIRING SHALL BE IN A CONDUIT. CONDUIT WHICH PENETRATES THE OUTSIDE WALL SHALL BE PROVIDED WITH A PIPE SLEEVE AND WALL SHALL BE PROPERLY SEALED. SEE DETAIL ON DRAWING E-06. ELECTRICAL CONTRACTOR SHALL BE RESPONSIBLE FOR PROVIDING POWER TO THE ZIPHANY SYSTEM. SEE DETAIL ON DRAWING M-704 FOR GAS AND ELECTRIC METERING BLOCK DIAGRAM.
3. ALL EXPOSED PIPING WITHIN THE MEPS FACILITY SHALL FURRED IN.
4. ALL HVAC BRANCH PIPING SHALL BE PROVIDED WITH SHUT-OFF VALVES FOR ISOLATION AND READILY ACCESSABLE.

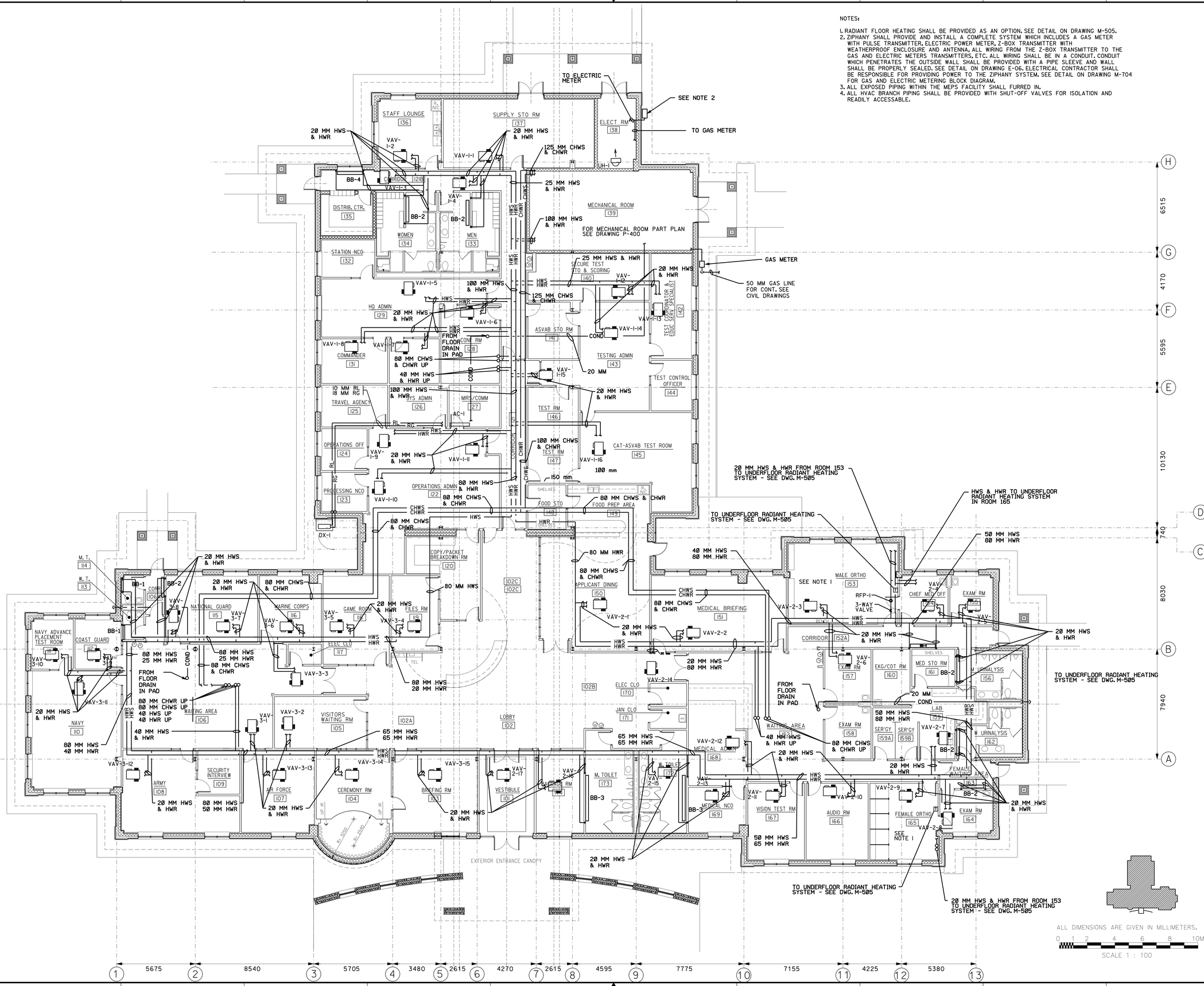

US Army Corps of Engineers
New York District

Rev.	Description	Date	Appr.
	90% SUBMISSION	10/08/04	
	60% SUBMISSION	06/09/04	
	15% SUBMISSION	03/25/04	

Designed by: Date: Size: Rev.
Dwn by: Ckd by: Drawing file no.:
Reviewed by: Drawing code:
Submitted by: Plot date: 19-NOV-2004 15:52 Plot by: eddwhite File: 00.dwg/M101
U.S. ARMY ENGINEER DISTRICT CORPS OF ENGINEERS NEW YORK, NEW YORK
File name: S:\Secure\military\Niagara Fall AFB\MEPS\Mechanical\MEPS_M-101.DGN

PN 58873
MILITARY ENTRANCE PROCESSING STATION (MEPS)
NIAGARA FALLS, NY

FLOOR PLAN PIPING

Sheet reference number:
M-101

Plot Date: 19-NOV-2004 15:52
Submitted by: eddwhite
S:\Secure\military\Niagara Fall AFB\MEPS\Mechanical\MEPS_M-101.DGN

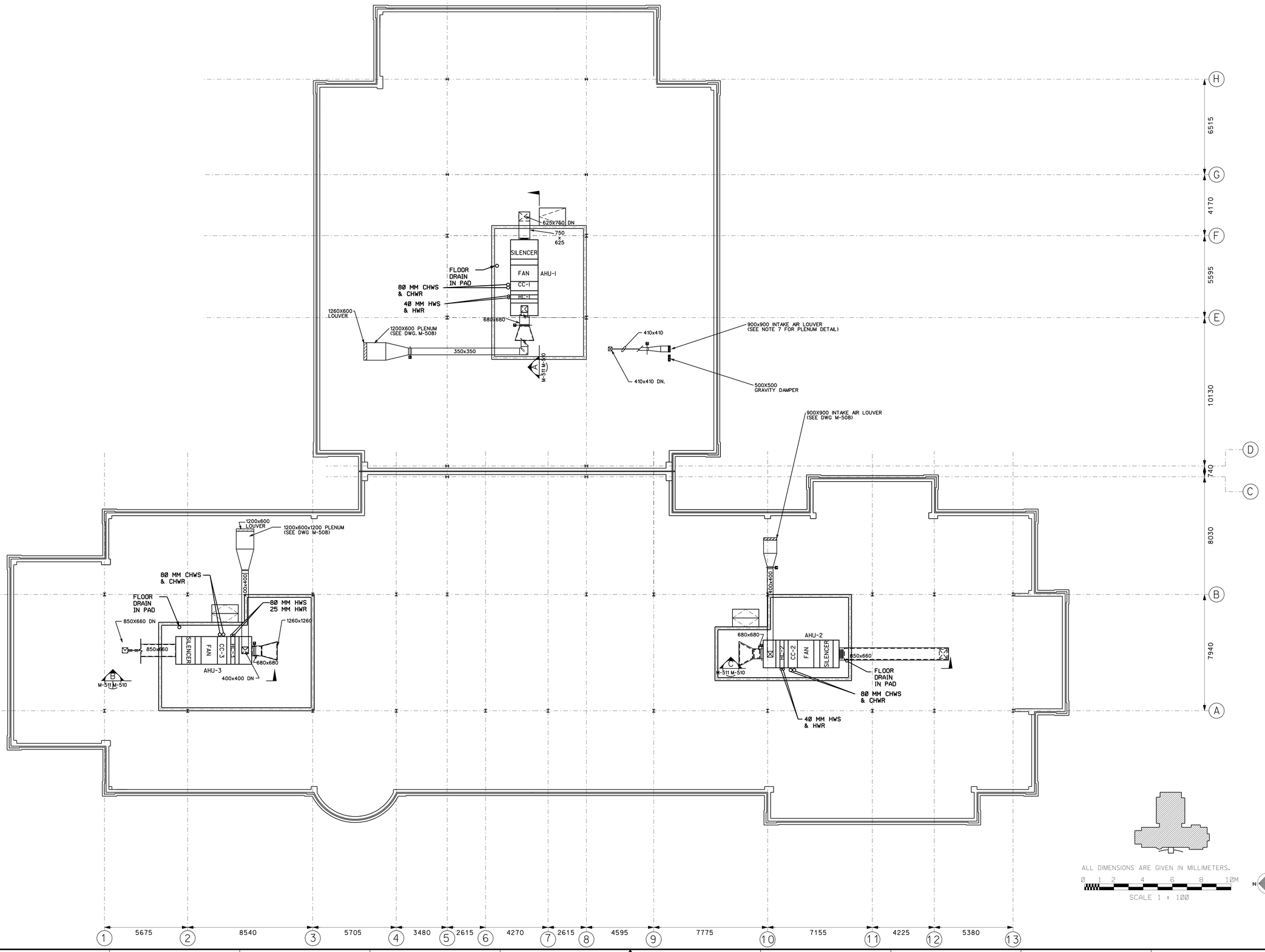

US Army Corps of Engineers
New York District

Symbol	Description	Date	Appr.
95% SUBMISSION		10/04/04	
65% SUBMISSION		06/30/04	
35% SUBMISSION		03/30/04	

			Size	Rev.
Designed by:	Date:			
Dwn by:	Ckd by:	Drawing file no:		
		Drawing code:		
Reviewed by:		Plot date: 19-NOV-2004 15:52 Plot by: e3jemwe File: 1200600.dwg		
Submitted by:				

U.S. ARMY ENGINEER DISTRICT
CORPS OF ENGINEERS
NEW YORK, NEW YORK

File name: S:\Division\Niagara Falls\FUTURE\MEPS\Mechanical\MEPS M-102.dgn

PN 59873
MILITARY ENTRANCE PROCESSING STATION (MEPS)
NIAGARA FALLS, NY

ATTIC DUCTWORK AND PIPING

Sheet reference number:
M–102

Plot Date: 19-NOV-2004 15:52
Plot By: e3jemwe
Submitted by: e3jemwe
perforcedemilitary\Niagara Fall AF\MEP\Mechanical\MEPS M-102.dgn

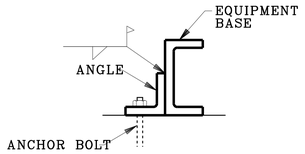

FIGURE "O"

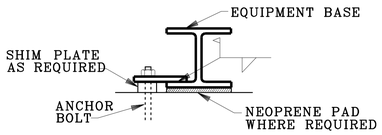

FIGURE "P"

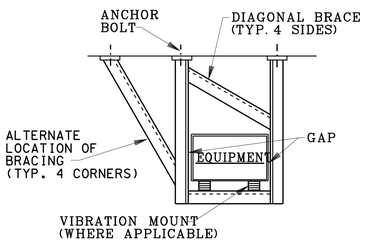

FIGURE "Q"

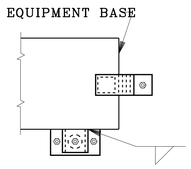

PLAN

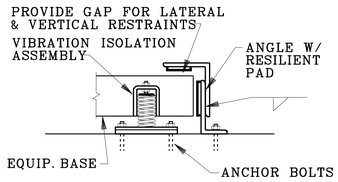

ELEVATION

FIGURE "R"

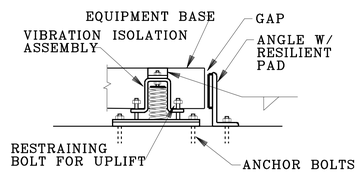

FIGURE "S"

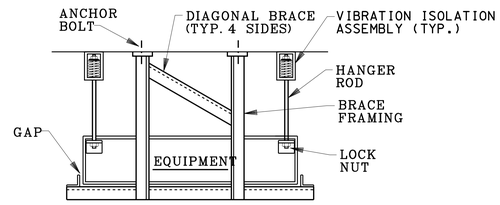

SUSPENDED EQUIPMENT W/ VIBRATION MOUNT

FIGURE "T"

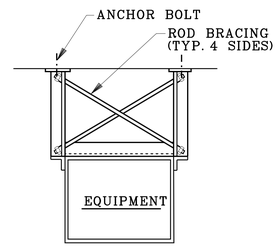

SUSPENDED EQUIPMENT

FIGURE "U"

NOTES:
1. CLEARANCES AT SIDES FOR SPRING MOUNTED EQUIPMENT AS IN FIG. "R" & "S", SHALL BE IN ACCORDANCE WITH MFR'S. RECOMMENDATIONS.
2. SEE MAXIMUM BRACING LENGTHS, TABLE 1, FOR BRACE SIZES.
3. IF EQUIPMENT IS MOUNTED ON NEOPRENE PADS, ANCHOR BOLTS SHALL BE ISOLATED FROM EQUIPMENT BY A NEOPRENE SLEEVE AND WASHER.
4. PROVIDE A MINIMUM OF (4) 12MM ANCHOR BOLTS FOR EQUIPMENT UP TO 45,500 KG. AND (4) 19MM BOLTS FOR EQUIPMENT 45,500 KG. OR GREATER. ADD (1) ADDITIONAL 19MM BOLT FOR EACH ADDITIONAL 11,500 KG.

EQUIPMENT SEISMIC SUPPORTS

NTS

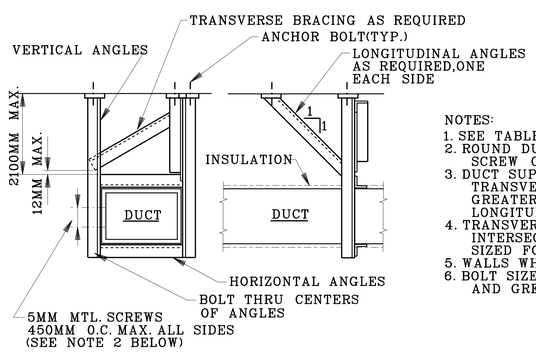

NOTES:
1. SEE TABLE 2 FOR ANGLE SIZES.
2. ROUND DUCT SUPPORTS SHALL BE SIMILAR, EXCEPT (1) 5MM METAL SCREW ON EACH OF THE FOUR QUADRANTS.
3. DUCT SUPPORT INTERVALS SHALL BE AS FOLLOWS:
   TRANSVERSE SWAY BRACING: MAX. EVERY 9000MM O.C. EACH HORIZ. TURN GREATER THAN 45 DEGREES, AND AT END OF EACH RUN.
   LONGITUDINAL SWAY BRACING: MAX. EVERY 1500MM O.C.
4. TRANSVERSE BRACING MAY SERVE AS HORZ. BRACING OF PERPENDICULAR INTERSECTING DUCTS IF INSTALLED WITHIN 1200MM OF INTERSECTION AND SIZED FOR LARGER DUCT.
5. WALLS WHICH DUCTS PENETRATE MAY SERVE AS TRANSVERSE BRACING.
6. BOLT SIZE SHALL BE 6MM UP TO 1350MM DUCT SIZE AND 10MM FOR 1350MM AND GREATER DUCT SIZE.

DUCT SEISMIC SUPPORTS

NTS

TABLE 3

PIPING SUPPORT SIZES & SPAN INTERVALS

PIPE I.D. MM (SEE NOTES)	BOLT TO ANGLE OR ROD	TRANSVERSE, LONGITUDINAL, AND VERTICAL ANGLES	ROD DIA.	MAXIMUM SPAN INTERVALS BETWEEN TRANSVERSE SWAY BRACING (MM)	
				STEEL PIPING	ALL OTHER PIPING MAT'L.
25	10MM	40MM X 40MM X 5MM	10MM	8400	4200
30	10MM	40MM X 40MM X 5MM	10MM	8400	4200
40	10MM	40MM X 40MM X 5MM	10MM	9500	4600
50	10MM	40MM X 40MM X 5MM	12MM	11000	5300
60	10MM	50MM X 50MM X 8MM	12MM	12200	5700
75	10MM	50MM X 50MM X 8MM	12MM	13000	6500
90	10MM	50MM X 50MM X 8MM	12MM	13700	6900
100	12MM	50MM X 50MM X 8MM	16MM	14900	7200
125	12MM	50MM X 50MM X 8MM	16MM	15600	7600
150	12MM	50MM X 50MM X 8MM	19MM	17000	8400
200	16MM	60MM X 60MM X 12MM	19MM	18700	9900
250	22MM	60MM X 60MM X 12MM	-	20600	10700
300	25MM	75MM X 75MM X 19MM	-	22100	11800

NOTES:
1. MAXIMUM SPAN INTERVALS ARE BASED ON PIPE WEIGHT WITH NO ATTACHMENTS. IF THE WEIGHT OF THE ATTACHMENTS ON A SPAN IS GREATER THAN 10% OF THE PIPE SPAN WEIGHT, ATTACHMENTS SHALL BE LATERALLY BRACED SEPARATELY.
2. FLEXIBLE CONNECTORS SHALL BE USED AS REQUIRED.
3. LONGITUDINAL BRACE INTERVAL SHALL BE MAXIMUM 12200 MM.
4. ALL TUBING SHALL BE BRACED AT 1200 MM INTERVALS.
5. CAST IRON SOIL PIPE SHALL BE BRACED AT 3000 MM INTERVALS.
6. SWAY BRACE REFERS TO TRANSVERSE OR LONGITUDINAL SUPPORTS.

TABLE 1

MAXIMUM BRACING LENGTHS

ITEM(1)	MAXIMUM LENGTH,L(2)
∡ 25MM X 25MM	975MM
∡ 30MM X 30MM	1200MM
∡ 40MM X 40MM	1450MM
∡ 45MM X 45MM	1700MM
∡ 50MM X 50MM	1900MM
∡ 60MM X 60MM	2500MM
∡ 75MM X 75MM	3000MM
∡ 90MM X 90MM	3500MM
10MM ROD	475MM
12MM ROD	625MM
16MM ROD	775MM
19MM ROD	925MM
22MM ROD	1100MM

NOTES:
1. REFERS TO ANGLES WHERE THE MAXIMUM LENGTH IS RELATIVELY INDEPENDENT OF THICKNESS. i.e. MAX. LENGTH SHOWN FOR A 25MM X 25MM ANGLE IS GOOD FOR ANGLES 6MM & 10MM THICK, ETC.
2. MAX. LENGTH, L, BASED ON L = 200r; LEAST RADIUS OF GYRATION = r.

TABLE 2

DUCT SUPPORT ANGLE SIZES

DUCT SIZE- DIA. OR LONGER SIDE (MM)	MIN. ANGLE SIZE
LESS THAN 1050	50MM x 50MM x 3MM
1050 TO 1500	60MM x 60MM x 5MM
OVER 1500	75MM x 75MM x 5MM

SEISMIC BRACING TABLES

NTS

US Army Corps of Engineers
New York District

U.S. ARMY ENGINEER DISTRICT
CORPS OF ENGINEERS
NEW YORK, NEW YORK

MILITARY ENTRANCE PROCESSING STATION (MEPS)
NIAGARA FALLS, NY

SEISMIC BRACING AND SUPPORT DETAILS – 1

Sheet reference number:
M–500

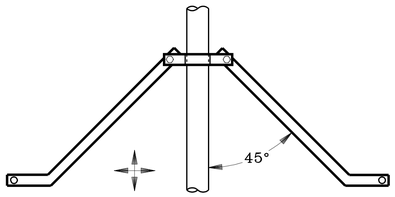

FIGURE "A"

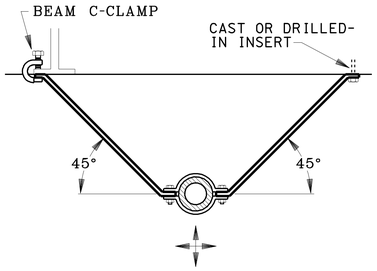

FIGURE "D"

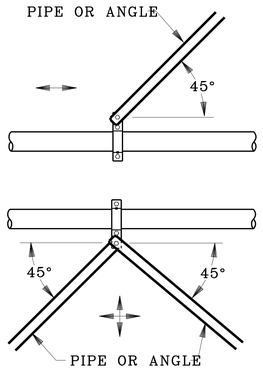

FIGURE "G"

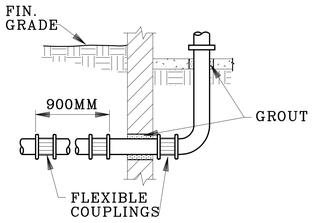

PIPE GROUTED IN WALL

FIGURE "J"

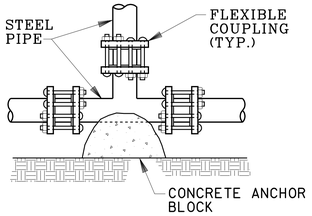

UNDERGROUND PIPING RISER-TEES

FIGURE "M"

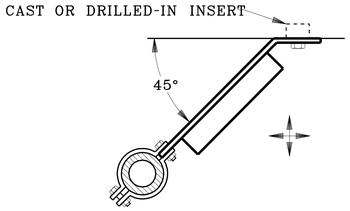

FIGURE "B"

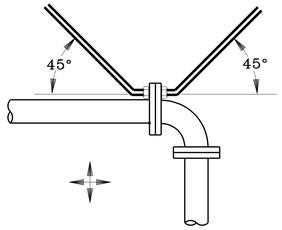

FIGURE "E"

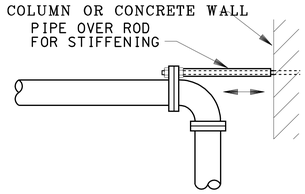

FIGURE "H"

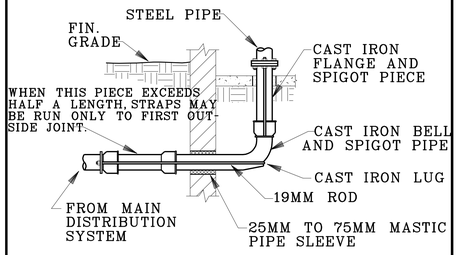

UNGROUTED PIPE

FIGURE "K"

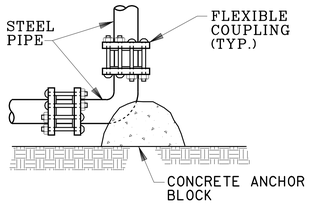

UNDERGROUND PIPING RISER-ELBOWS

FIGURE "N"

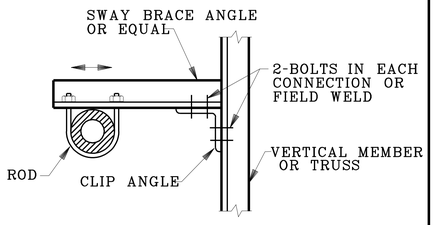

FIGURE "C"

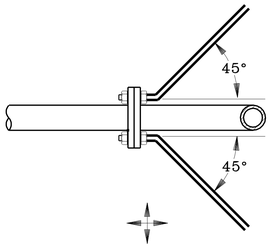

FIGURE "F"

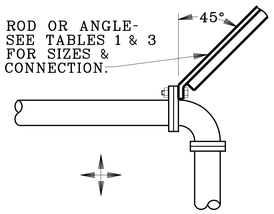

FIGURE "I"

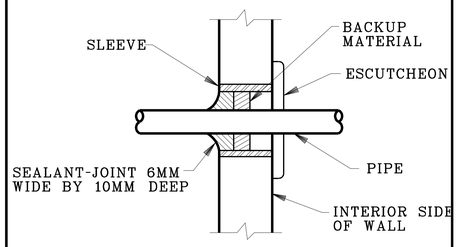

PIPE SLEEVE F/BARE PIPE THRU WALL-ABOVE GRADE

FIGURE "L"

NOTES:
RODS OR ANGLES MAY BE USED FOR SUPPORTS INTERCHANGEABLY. SEE MAXIMUM BRACING LENGTHS SHOWN IN TABLE 1 AND MINIMUM SIZES AND SPAN INTERVALS IN TABLE 3.

ARROWS INDICATE DIRECTION OF AVAILABLE FORCE RESISTANCE, TYPICAL.

SEISMIC PIPE SUPPORT DETAILS

NTS

US Army Corps of Engineers
New York District

Symbol	Description	Date	App.

Designed by:	Date:
Dwn by:	Ckd by:
Reviewed by:	Drawing file no.:
Submitted by:	Drawing code:
	Pnt date: 19-NOV-2004 15:53
	Plot by: admrmw
	Size: 0.0000x0.0000
	Size: Rev.:

U.S. ARMY ENGINEER DISTRICT
CORPS OF ENGINEERS
NEW YORK, NEW YORK

File name: S:\Services\military\Niagara Falls\MEPS\Mechanical\MEPS M-501.dgn

PN 58873
MILITARY ENTRANCE PROCESSING STATION (MEPS)
NIAGARA FALLS, NY

SEISMIC BRACING AND SUPPORT DETAILS – 2

Sheet reference number:
M–501

Submitted by: e3jetmew
Setter-submitter:jeffdupre Fail: AFBMP2\Mechanical\MEPS M-501.dgn
Plot Date: 19-NOV-2004 15:53

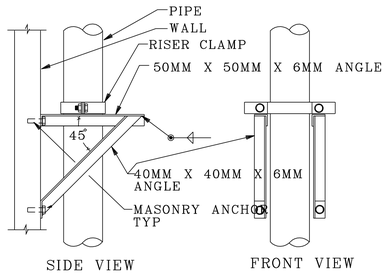

VERTICAL PIPE SUPPORT DETAIL

NTS

NOTE:
THE NUMBER OF PIPES SUPPORTED AND LEVELS OF SUPPORT WILL VARY WITH THE RELATIVE LOCATION TO THE CONDENSING UNIT.

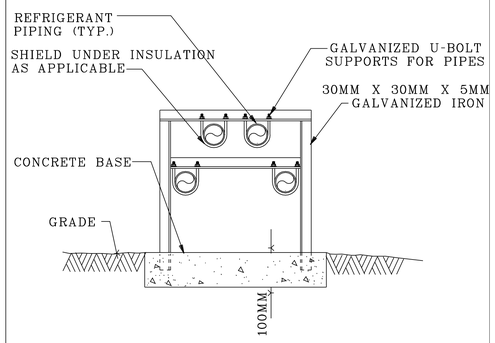

REFRIGERANT PIPE SUPPORT DETAIL

NTS

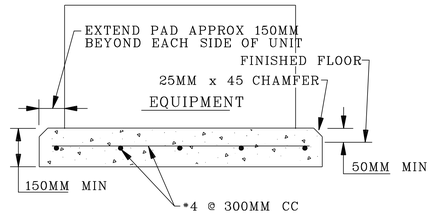

TYPICAL EQUIPMENT PAD DETAIL

NTS

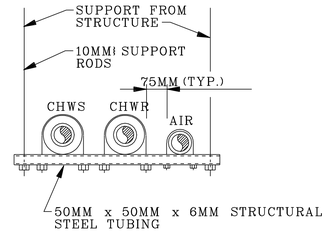

TRAPEZE HANGAR ASSEMBLY

NTS

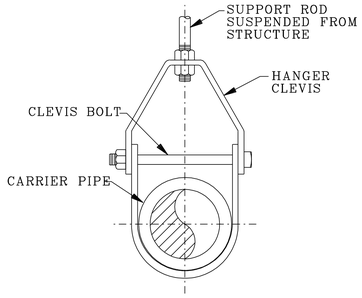

TYPICAL ADJUSTABLE CLEVIS HANGAR

NTS

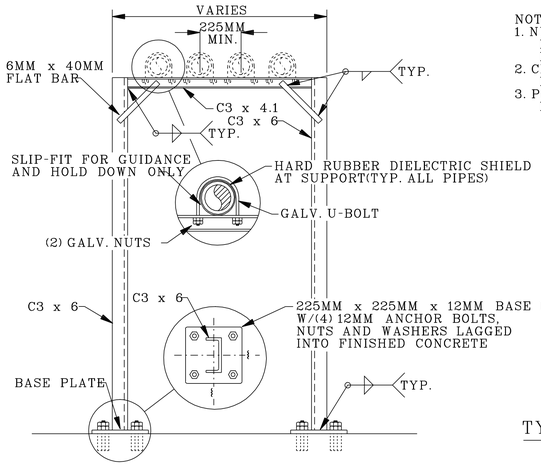

NOTES:
1. NUMBER OF PIPE SUPPORT RUNGS AND OVER-ALL DIMENSIONS VARY WITH NUMBER OF PIPES TO BE SUPPORTED.
2. CLEAN STEEL OF ALL MILL SCALE AND RUST. HOT DIP GALVANIZE ENTIRE STRUCTURE.
3. PROVIDE GALV. STEEL INSULATION SHIELDS FOR INSULATED PIPING.

TYPICAL PIPE SUPPORT STRUCTURE

NTS

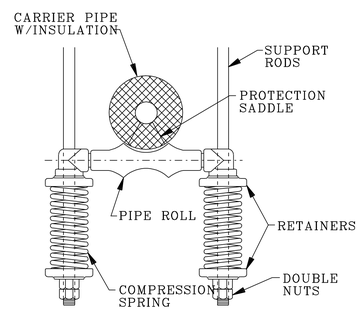

TYPICAL SPRING CUSHION HANGAR DETAIL

NTS

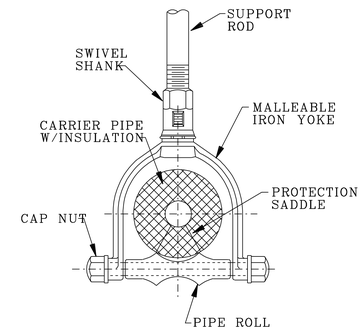

TYPICAL ADJUSTABLE SWIVEL PIPE HANGAR DETAIL

NTS

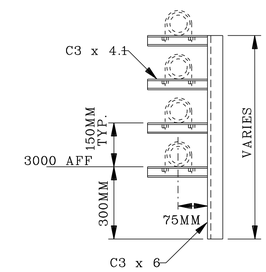

NOTE: NUMBER OF PIPE SUPPORT RUNGS AND OVER-ALL DIMENSION VARIES WITH NUMBER OF PIPES SUPPORTED AND WALL SUPPORT POINTS. REFER TO ARCH. AND STRUCT. DWGS. FOR DETAILS OF SECURING TO WALL STRUCTURE.

TYPICAL WALL SUPPORTED PIPE HANGAR DETAIL

NTS

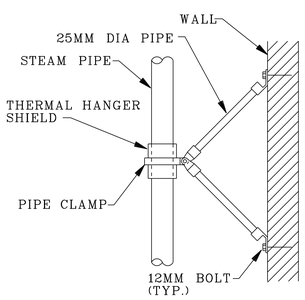

TYPICAL VERTICAL PIPE SUPPORT DETAIL

NTS

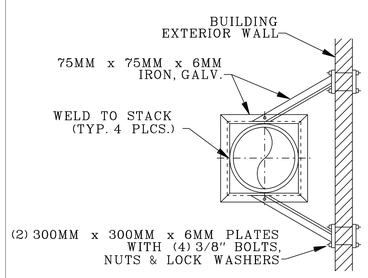

NOTE:
STACK SUPPORTS 2400MM O.C. (TYP.) AND AT ROOF EDGES

TYPICAL VERTICAL STACK SUPPORT DETAIL

NTS

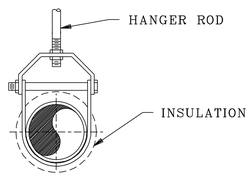

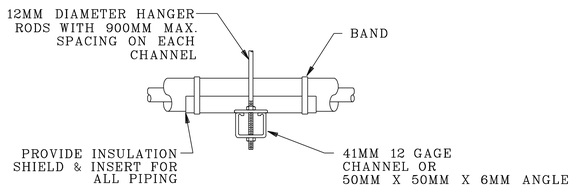

MAXIMUM PIPE/TUBING SUPPORT SPACING, MM																		
NOM. SIZE	THRU 19MM	25	31	40	50	60	75	100	125	150	200	250	300	350	400	450	500	600
PIPE	2100MM	2100	2100	2700	3000	3300	3600	4200	4800	5100	5700	6600	6900	7500	8200	8500	9100	9800
TUBING	1500MM	1500	2100	2400	2400	2700	3000	3600	3900	4200	4800	-	-	-	-	-	-	-
NOTE: FOR TRAPEZE HANGER TAKE SPACING OF SMALLEST SIZE ON TRAPEZE																		

TYPICAL PIPE SUPPORT DETAILS

NTS

US Army Corps of Engineers
New York District

Symbol	Description	Date	Appr.

Designed by: | Date: | Size: | Rev:
Dwn by: | Ckd by: | Drawing file no.:
Reviewed by: | Drawing code:
Submitted by: | Plot date: 19-NOV-2004 15:53 | Plot by: s.klatt@mwh.com | File: s.klatt@mwh.com
File name: S:\Niagara\Niagara Fall AFB\MEPS\Mechanical\MEPS M-502.dgn

U.S. ARMY ENGINEER DISTRICT
CORPS OF ENGINEERS
NEW YORK, NEW YORK

PN 58973
MILITARY ENTRANCE PROCESSING STATION (MEPS)
NIAGARA FALLS, NY

PIPING SUPPORT DETAILS

Sheet reference number:
M–502

Submitted by: s3jentwe
Pentium-Celeron(Mobile)-Pentium-III(Coppermine) 6 Fall AFB\MEPS\Mechanical\MEPS M-502.dgn
Plot Date: 19-NOV-2004 15:53

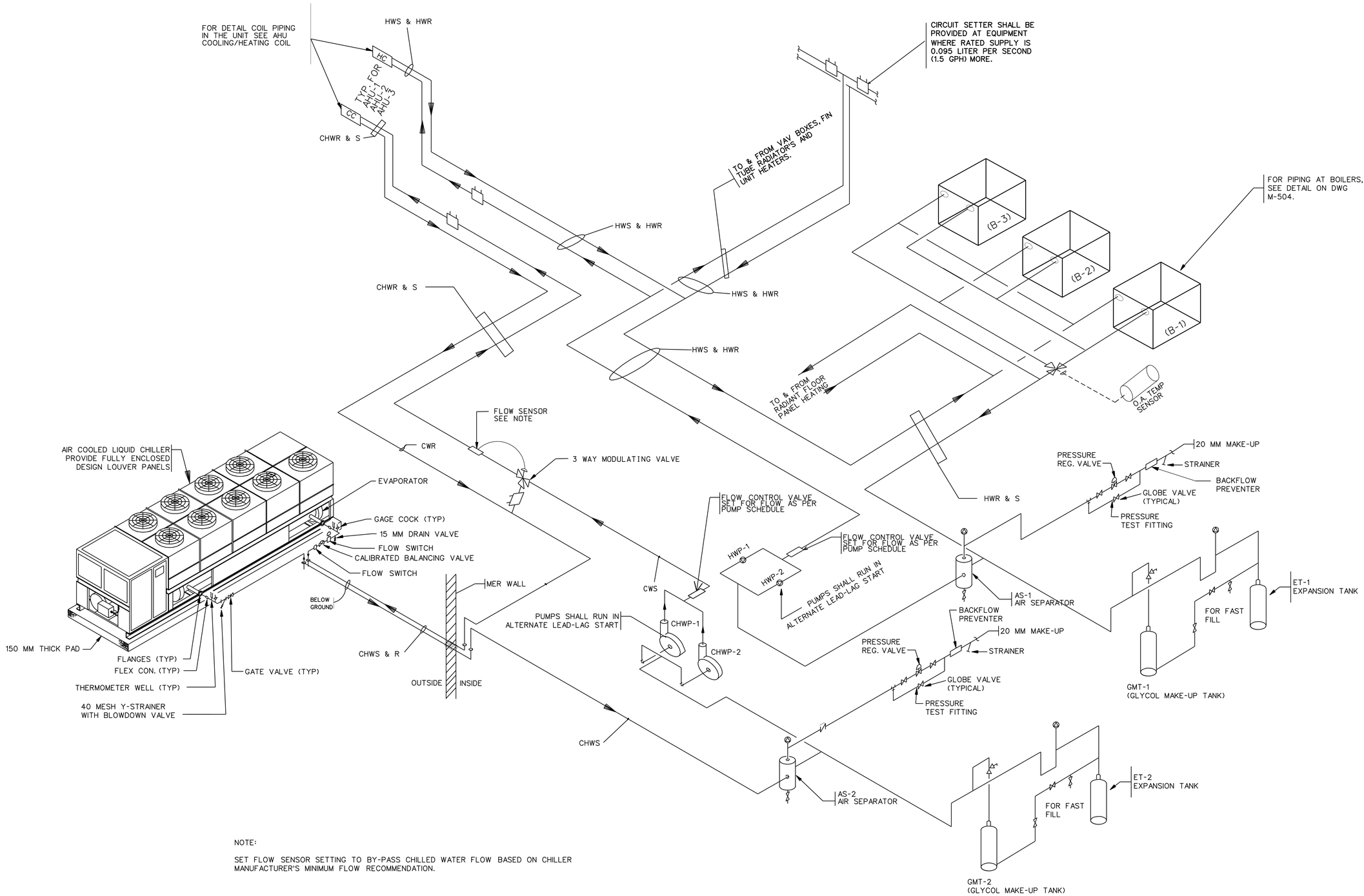

NOTE:

SET FLOW SENSOR SETTING TO BY-PASS CHILLED WATER FLOW BASED ON CHILLER MANUFACTURER'S MINIMUM FLOW RECOMMENDATION.

HOT/CHILLED WATER PIPING SCHEMATIC DETAIL

NTS

US Army Corps of Engineers
New York District

Symbol	Description	Date	App.

U.S. ARMY ENGINEER DISTRICT
CORPS OF ENGINEERS
NEW YORK, NEW YORK

Designed by: | Date: | Size: | Rev:
Dwn by: | Ckd by: | Drawing file no.:
Reviewed by: | Drawing code:
Submitted by: | Plot date: 19-NOV-2004 15:53 | Plot by: a33jemwe | File: 60060000
File name: S:\Division\Military\Niagara Fall AFB\MEPS\Mechanical\MEPS M-503.dgn

PN 58873
MILITARY ENTRANCE PROCESSING STATION (MEPS)
NIAGARA FALLS, NY

MECHANICAL DETAILS-1

Sheet reference number:
M-503

Submitted by: a33jemwe
Lattice-Guantitier graphigure Fail AFB\MEPS\Mechanical\MEPS M-503.dgn
Plot Date: 19-NOV-2004 15:53

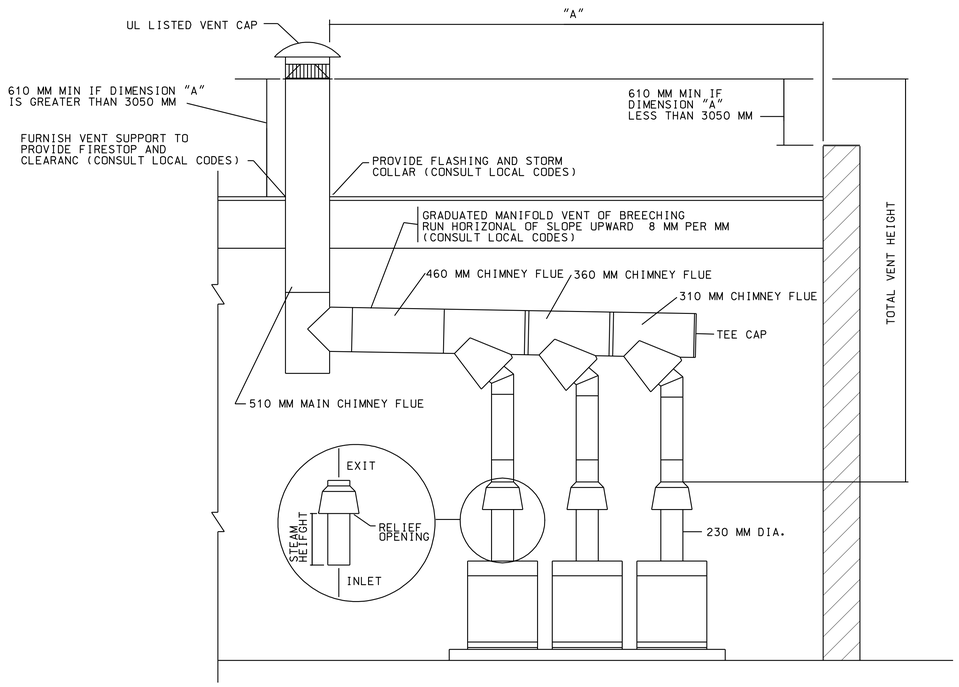

GRADUATED DIAMETER MANIFOLD
VENT OR BREECHING FOR THREE MODULES

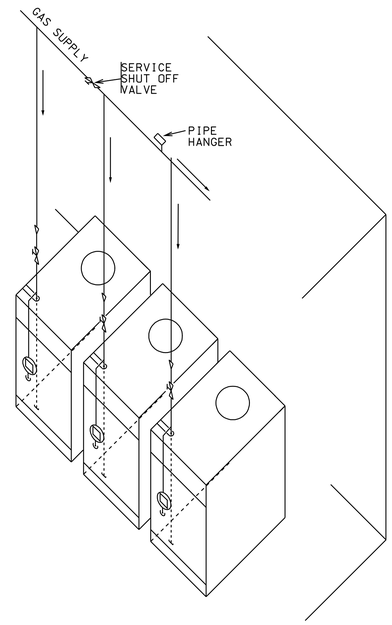

MODULAR GAS BOILERS
(GAS SUPPLY)

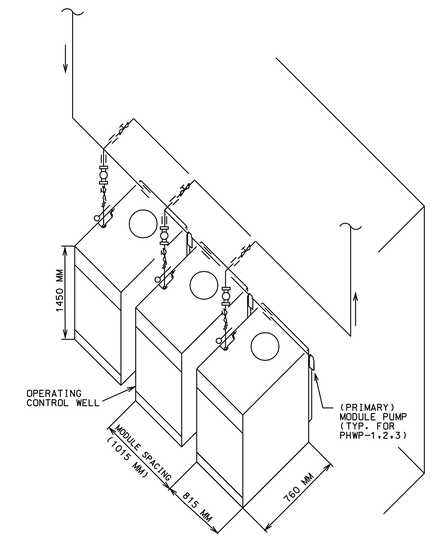

MODULAR GAS BOILERS
(WATER SUPPLY & RETURN)

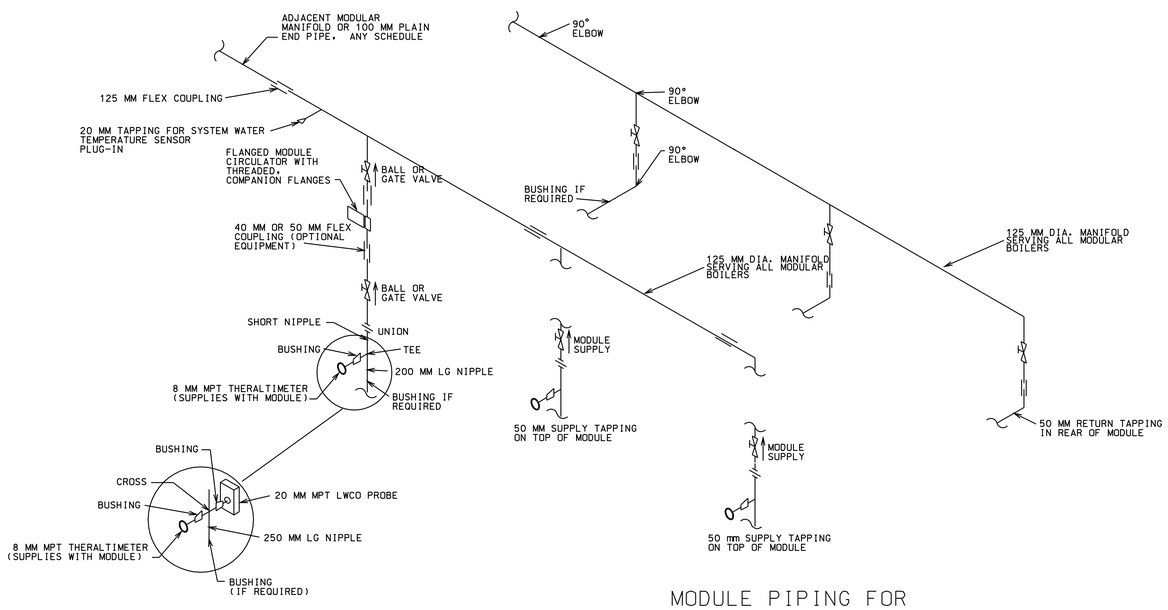

PIPING FOR PROBE
LWCO FOR EACH MODULE

MODULE PIPING FOR
PRIMARY/SECONDARY MODULAR MANIFOLD

US Army Corps of Engineers
New York District

Symbol	Description	Date	Appr.

U.S. ARMY ENGINEER DISTRICT
CORPS OF ENGINEERS
NEW YORK, NEW YORK

Designed by: | Date: | Size: | Rev.:
Dwn by: | Ckd by: | Drawing file no.:
Reviewed by: | Drawing code:
Submitted by: | Plot date: 19-NOV-2004 15:53 | Plot by: ADMIN | Scale: 00:00:00:00:00:00
File name: S:\Services\military\Niagara Falls\MEPS\Mechanical\MEPS M-504.dgn

PN 58873
MILITARY ENTRANCE PROCESSING STATION (MEPS)
NIAGARA FALLS, NY

MECHANICAL DETAILS–2

Sheet reference number:
M–504

Submitted by: e3jetmee
Plot Date: 19-NOV-2004 15:53
Saffiler:admin:User:pnhiggins Fail:AFBANE:PA&Mechanical:MEPS M-504.dgn

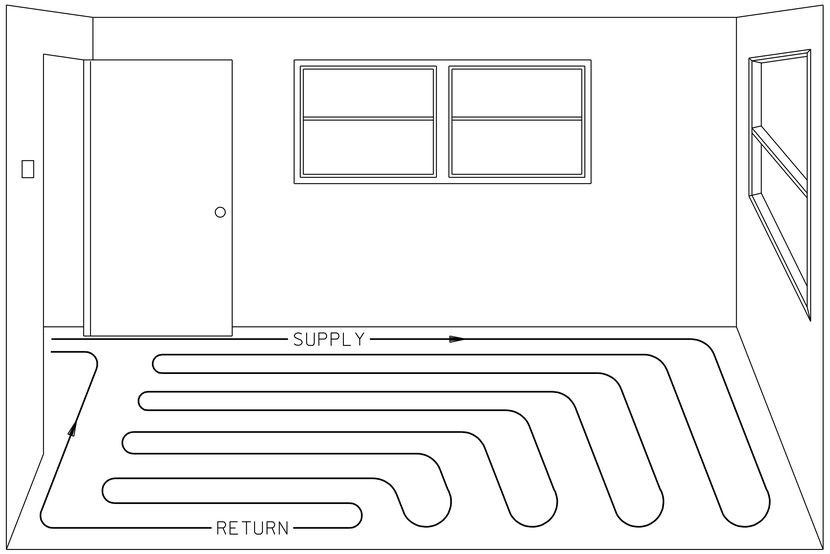

DOUBLE WALL SERPENTINE
NTS
FEMALE ORTHO ROOM 165

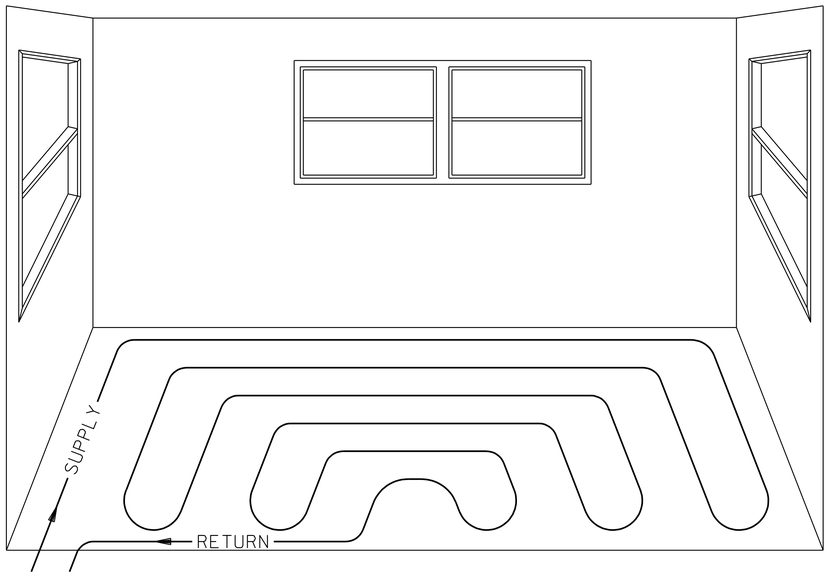

TRIPLE WALL SERPENTINE
NTS
MALE ORTHO ROOM 153

TYPICAL TUBING LAYOUT PATTERN

OPTION

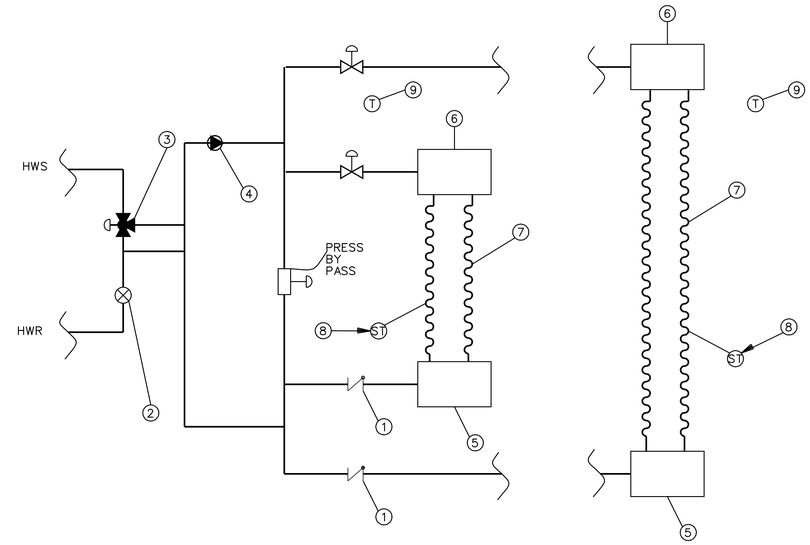

1. CHECK VALVE
2. GATE VALVE
3. 3-WAY TEMPERING DEVICE
4. RADIANT PANEL CIRCULATOR (RFP-1)
5. RETURN MANIFOLD
6. SUPPLY MANIFOLD
7. RADIANT PANEL-TUBING LOOPS
8. SLAB SENSOR
9. SPACE SENSOR

RADIANT FLOOR HEATING SCHEMATIC
3-WAY TEMPERING DEVICE
NTS

NOTES:

1. SUPPLY AND RETURN MANIFOLD IN FURRED OUT ENCLOSURE AND EASILY ACCESSIBLE.
2. TUBING LAYOUT PATTERN SHALL BE IN ACCORDANCE WITH MANUFACTURER'S RECOMMENDATION.
3. RFP-1 SHALL BE RATED AT .32 L/S AT 3048 MM HEAD.
4. VALVES SHALL BE EASILY ACCESSIBLE.

US Army Corps of Engineers
New York District

U.S. ARMY ENGINEER DISTRICT
CORPS OF ENGINEERS
NEW YORK, NEW YORK

Designed by:
Dwn by:
Ckd by:
Reviewed by:
Submitted by:
Date:
Size:
Rev.
Drawing file no.:
Drawing code:
Plot date: 19-NOV-2004 15:53
Plot by: eclemwe
Scale: AS NOTED
File name: S:\Services\military\Niagara Fall\FE\MEPS\Mechanical\M505.dgn

MILITARY ENTRANCE PROCESSING STATION (MEPS)
NIAGARA FALLS, NY
PN 58873

MECHANICAL DETAILS-3

Sheet reference number:
M–505

Submitted by: eclemwe
Plot Date: 19-NOV-2004 15:53
S:\Services\military\Niagara Fall\FE\MEPS\Mechanical\M505.dgn

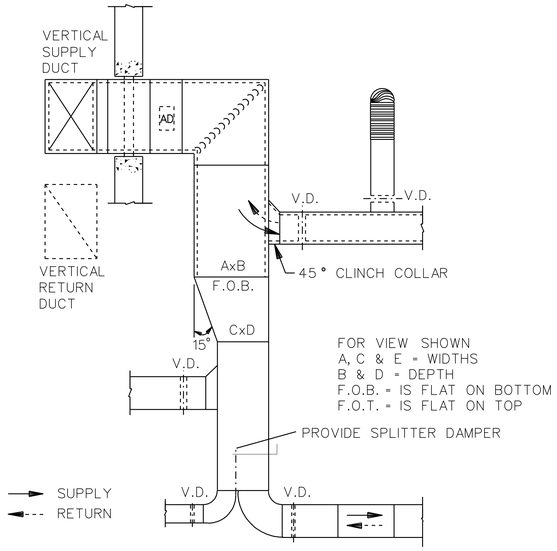

TYPICAL SUPPLY OR RETURN DUCT DETAIL

NTS

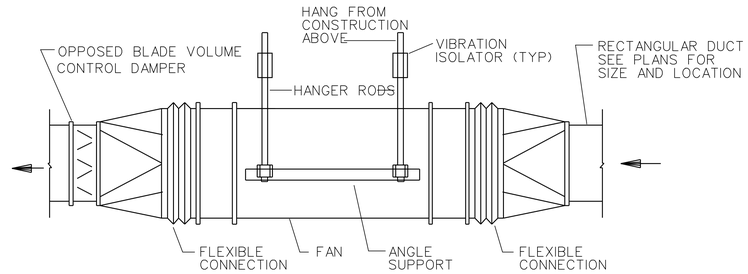

TYPICAL IN-LINE FAN DETAIL

NTS

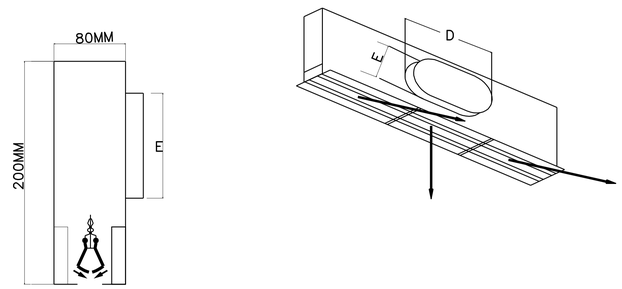

NOTES:

1. PLENUM SHALL BE AN INTEGRAL PART OF LINEAR DIFFUSER. ASSEMBLY AND FACTORY FABRICATED.
2. PROVIDE VOLUME CONTROL DAMPER.
3. NUMBER OF SLOTS SHALL BE AS PER SCHEDULE.
4. LINEAR DIFFUSER AIR SUPPLY PLENUM SHALL BE INSULATED.

INLET SIZE (MM)	D (MM)	E (MM)
150	190	80
200	250	100
250	320	125

TYPICAL LINEAR PLENUM SLOT DIFFUSER DETAIL

NTS

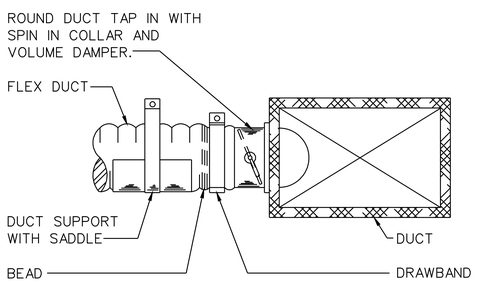

NOTES:

1. FLEXIBLE DUCT SUPPORT SHALL HAVE A MAX. 900MM SPACING.
2. FLEXIBLE DUCT SHALL BE U.L. LISTED.
3. SEE SMACA DUCT CONSTRUCTION STANDARDS FOR ROUND CONNECTIONS TO RECTANGULAR DUCT.

TYPICAL FLEXIBLE DUCT INSTALLATION DETAIL

NTS

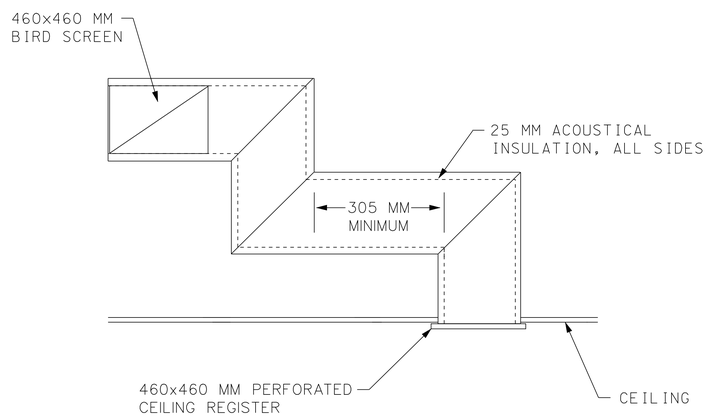

TYPICAL Z-SHAPED TRANSFER DUCT DETAIL

NTS

US Army Corps of Engineers
New York District

Symbol	Description	Date	Appr.

U.S. ARMY ENGINEER DISTRICT
CORPS OF ENGINEERS
NEW YORK, NEW YORK

Designed by: | Date: | Size: | Rev.:
Dwn by: | Ckd by: | Drawing file no.:
Reviewed by: | Drawing code:
Submitted by: | Plot date: 19-NOV-2004 15:53 | Plot for scale: 40000mm
File name: S:\Benson\military\Niagara Falls\MEPS\Mechanical\M506.dgn | Plot file: 50_M506M0000

PN 58873
MILITARY ENTRANCE PROCESSING STATION (MEPS)
NIAGARA FALLS, NEW YORK

MECHANICAL DETAILS-4

Sheet reference number:
M–506

Submitted by: e3jetmee
Saffier\admin\User\pnhugoro Full AFBANDS\Mechanical\MEPS M506.dgn
Plot Date: 19-NOV-2004 15:53

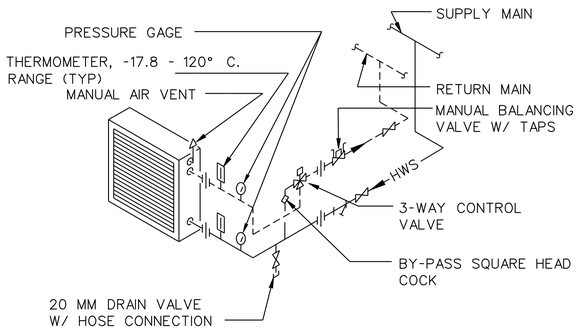

NOTES:

1. ARRANGE PIPING TO PERMIT REMOVAL OF COIL.
2. THE MANUAL BALANCING VALVES SHALL BE INSTALLED BY THE CONTRACTOR IN CONFORMANCE WITH VALVE MANUFACTURER'S RECOMMENDED SPACING UP AND DOWNSTREAM FROM PIPE CHANGES IN DIRECTION AND/OR OTHER VALVES AND COMPONENTS IN THE PIPING.

TYPICAL HOT WATER COIL PIPING DETAIL - AHU'S

NTS

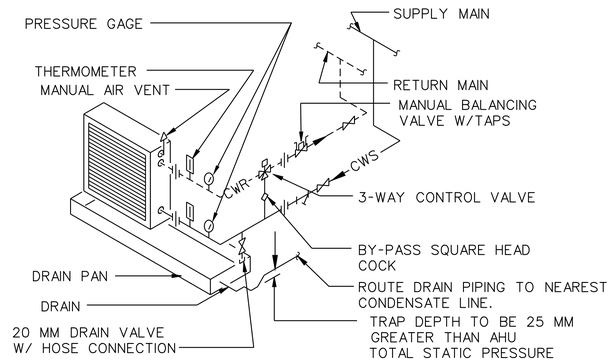

NOTES:

1. ARRANGE PIPING TO PERMIT REMOVAL OF COIL.
2. THE FLOW CONTROL BALANCING VALVES SHALL BE INSTALLED BY THE CONTRACTOR IN CONFORMANCE WITH VALVE MANUFACTURER'S RECOMMENDED SPACING UP AND DOWNSTREAM FROM PIPE CHANGES IN DIRECTION AND/OR OTHER VALVES AND COMPONENTS IN THE PIPING.

TYPICAL CHILLED WATER COIL PIPING DETAIL - AHU'S

NTS

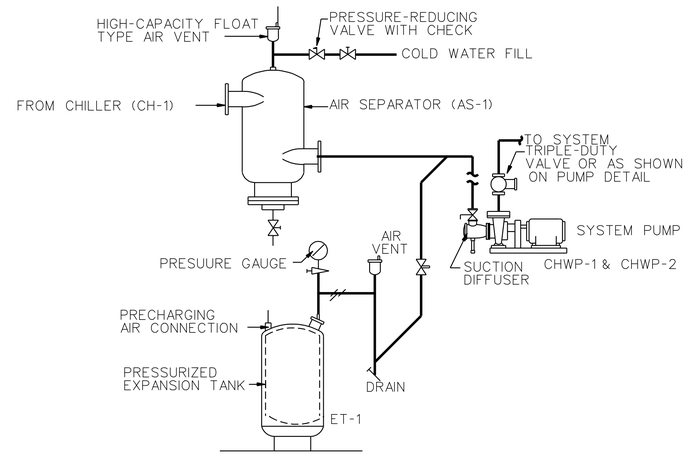

TYPICAL HYDRONIC AIR CONTROL INSTALLATION WITH PRESSURIZED EXPANSION TANK (FOR CHILLED WATER SYSTEM)

NTS

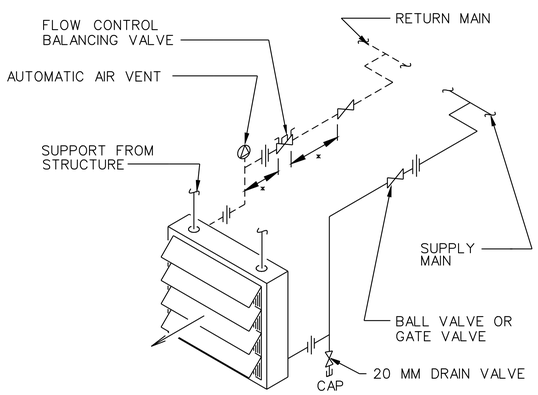

✳ THE FLOW CONTROL BALANCING VALVES SHALL BE INSTALLED BY THE CONTRACTOR IN CONFORMANCE WITH VALVE MANUFACTURER'S RECOMMENDED SPACING UP / DOWNSTREAM FROM PIPE CHANGES IN DIRECTION AND / OR OTHER VALVES / COMPONENTS IN THE PIPING.

NOTES:

1. UNITS SHALL BE CONTROLLED BY LINE VOLTAGE THERMOSTATS WITH ON- OFF AUTO CONTROLS .
2. AUTOMATIC VENT NOT TO BE USED AT AREAS WITH ELECTRICAL EQUIPMENT.

TYPICAL HOT WATER UNIT HEATER PIPING DETAIL

NTS

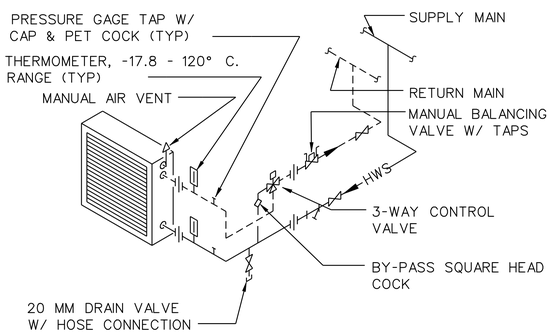

NOTES:

1. ARRANGE PIPING TO PERMIT REMOVAL OF COIL.
2. THE MANUAL BALANCING VALVES SHALL BE INSTALLED BY THE CONTRACTOR IN CONFORMANCE WITH VALVE MANUFACTURER'S RECOMMENDED SPACING UP AND DOWNSTREAM FROM PIPE CHANGES IN DIRECTION AND/OR OTHER VALVES AND COMPONENTS IN THE PIPING.

TYPICAL HOT WATER COIL PIPING DETAIL (VAV'S)

NTS

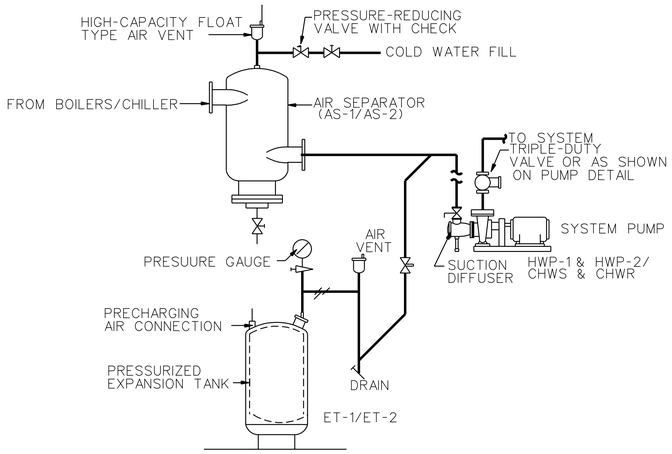

TYPICAL HYDRONIC AIR CONTROL INSTALLATION WITH PRESSURIZED EXPANSION TANK (FOR HOT /CHILLED WATER SYSTEM)

NTS

US Army Corps of Engineers
New York District

Symbol	Description	Date	Appr.

U.S. ARMY ENGINEER DISTRICT
CORPS OF ENGINEERS
NEW YORK, NEW YORK

Designed by: | Date: | Size: | Rev.:
Dwn by: | Ckd by: | Drawing file no.:
Reviewed by: | Drawing code:
Submitted by: | Plot date: 19-NOV-2004 15:53 | Plot for: 40scale | Scale: SO_M0000000000
File name: S:\Services\military\Niagara_Falls\FEMP\Mechanical\MEPS_M-507.dgn

PN 58873
MILITARY ENTRANCE PROCESSING STATION (MEPS)
NIAGARA FALLS, NEW YORK

MECHANICAL DETAILS-5

Sheet reference number:
M–507

Submitted by: e3jetmee
Plot Date: 19-NOV-2004 15:53
Saffiler:admin:User:jahlquist:e Fail: AFBANE:Sabelnic:LANEPS M-507.dgn

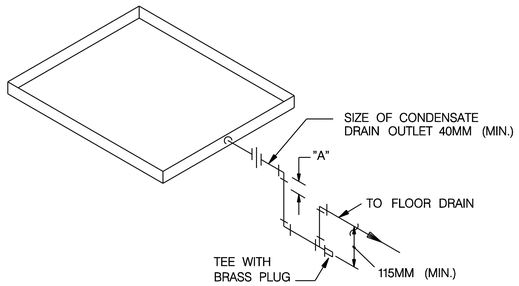

NOTE:
DIMENSION "A" SHALL BE EQUAL TO 1.5 TIMES THE UNIT FAN STATIC PRESSURE IN PA OF WATER

TYPICAL PIPING AT DRIP PAN FOR AHU'S DETAIL

NTS

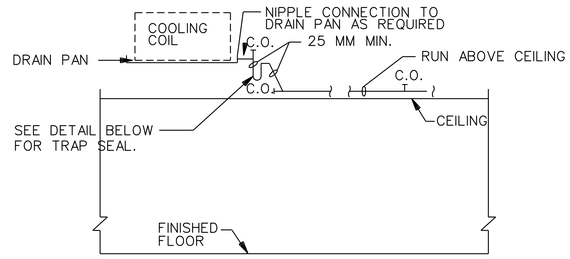

TYPICAL COOLING COIL DRAIN & CONDENSATE DRAIN CONNECTION

NTS

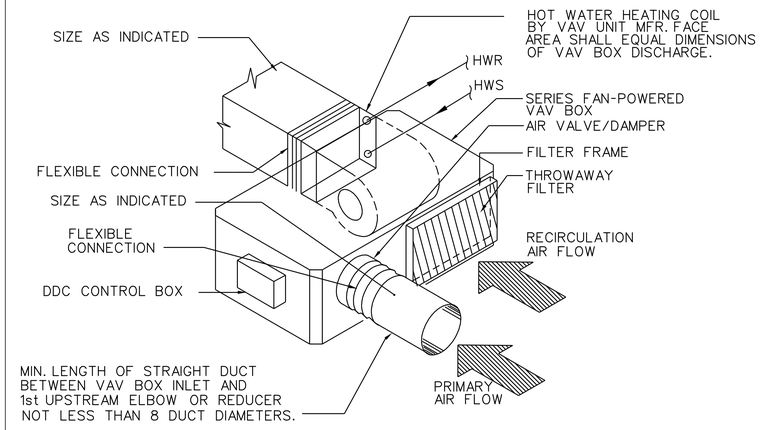

TYPICAL SERIES FAN POWERED VAV UNIT W/REHEAT DETAIL

NTS

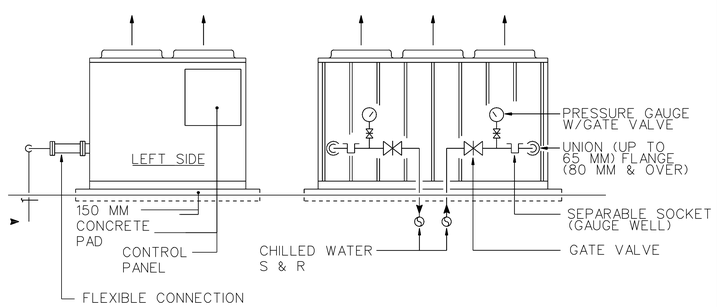

TYPICAL AIR-COOLED CHILLER PIPING CONNECTION DETAIL

NTS

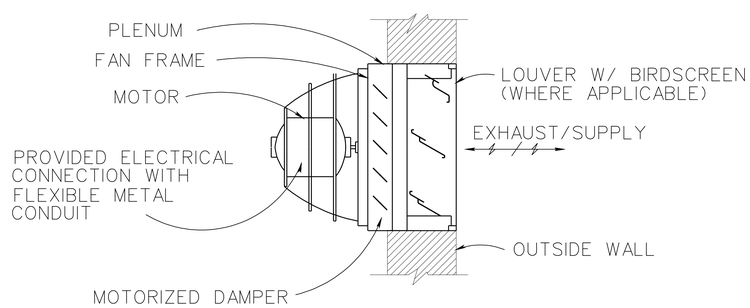

TYPICAL PROPELLER EXHAUST/SUPPLY FAN DETAIL

NTS

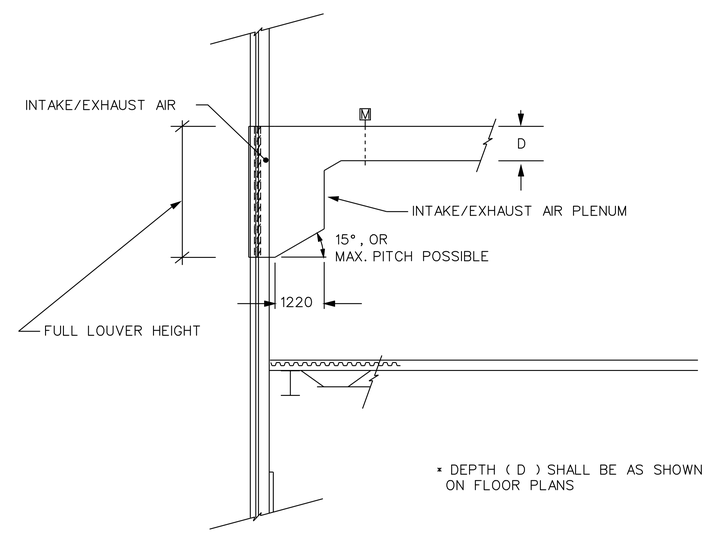

NOTE:

1. PLENUM SHALL BE A SELF DRAINABLE TYPE AND SLOPING.
2. MECHANICAL CONTRACTOR SHALL COORDINATE WITH TRUSS MANUFACTURER.

TYPICAL PLENUM

NTS

US Army Corps of Engineers
New York District

Symbol	Description	Date	Appr.

Designed by: | Date: | Size: | Rev.:
Dwn by: | Ckd by: | Drawing file no.:
Reviewed by: | Drawing code:
Submitted by: | Plot date: 19-NOV-2004 15:54 | Plot by: ADMIN | Scale: NO SCALE
File name: S:\Benson\military\Niagara Falls\MEPS\Mechanical\M508.dgn

U.S. ARMY ENGINEER DISTRICT
CORPS OF ENGINEERS
NEW YORK, NEW YORK

PN 58973
MILITARY ENTRANCE PROCESSING STATION (MEPS)
NIAGARA FALLS, NEW YORK

MECHANICAL DETAILS-6

Sheet reference number:
M–508

Plot Date: 19-NOV-2004 15:54
Submitted by: e3jetmee
Saf:Ter:Admin:Tur:pmNiagara Fall AFB&MEP:Mechanical:MEPS M-508.dgn

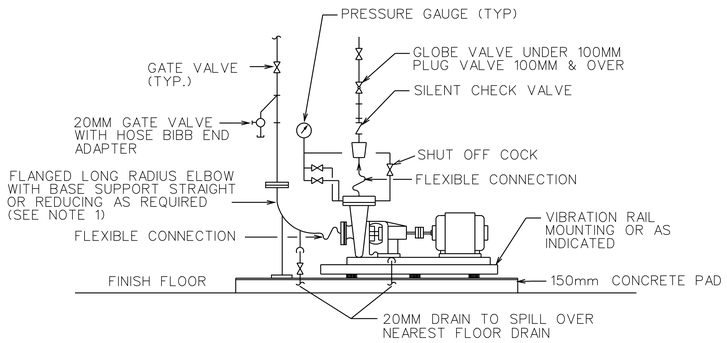

NOTES:

1. INSTALL WITH FIVE (5) DIAMETERS OF STRAIGHT PIPE BETWEEN THE ELBOW & PUMP SUCTION. A SUCTION DIFFUSER MAY BE USED IN LIEU OF THE ELBOW, STRAIGHT PIPE AND STRAINER.
2. MULTIPURPOSE VALVE MAY BE SUBSTITUTED FOR CHECK, GLOBE & GATE VALVE, SHOWN ON PUMP DISCHARGE.

TYPICAL END SUCTION PUMP INSTALLATION DETAIL

NTS

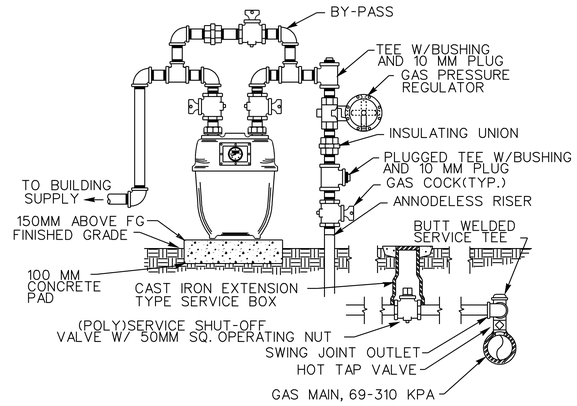

NOTES:

1. LINE SIZES AS CALLED FOR ON SITE PLAN.
2. CONTRACTOR SHALL BE RESPONSIBLE FOR CONNECTING GAS LINE TO THE EXISTING 200 MM GAS MAIN.

TYPICAL GAS SERVICE (W/BY-PASS) DETAIL

NTS

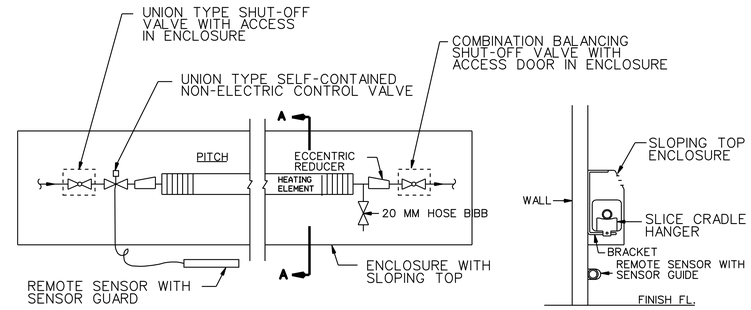

SECTION "A"-"A"

NOTE:

BASEBOARD ENCLOSURE TO ENCLOSE ALL PIPING AND VALVES.

TYPICAL BASEBOARD PIPING DETAIL

NTS

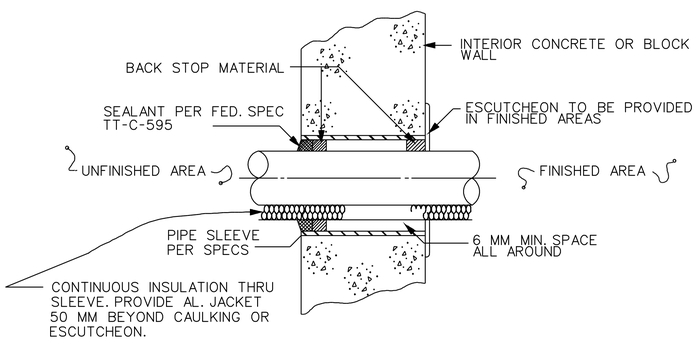

TYPICAL WALL PIPE SLEEVE DETAIL

NTS

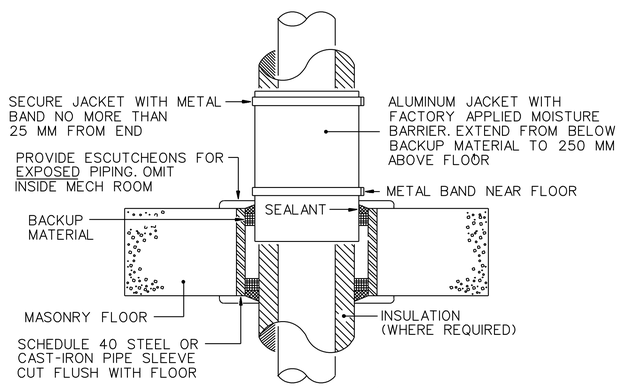

[1]OMIT ALUMINUM JACKET IF PIPING IS UNINSULATED

TYPICAL FLOOR PIPE PENETRATION DETAIL

NTS

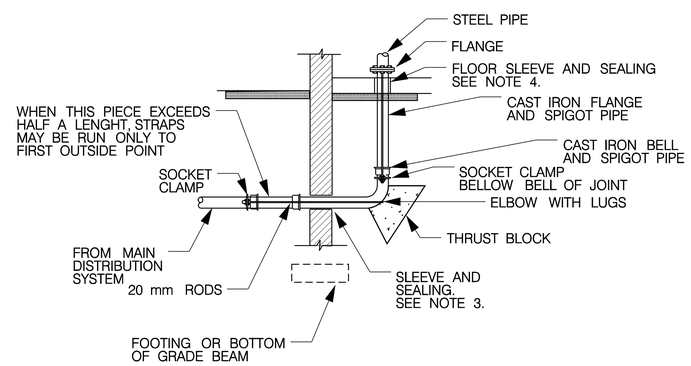

DETAIL FOR WATER SERVICE PIPING ENTERING BUILDING

NTS

NOTES:

1. HORIZONTAL TIE RODS SHALL BE ATTACHED TO THE LUGS ON THE ELBOW AND TO THE SOCKET CLAMP ON THE SERVICE PIPE.
2. VERTICAL TIE RODS SHALL BE ATTACHED TO THE FLANGE ON ONE END AND TO A SOCKET CLAMP ON THE OTHER END.
3. TWO TIE RODS SHALL BE ATTACHED ON THE HORIZONTAL PIPE AND ON THE VERTICAL PIPE. THESE RODS SHALL BE INSTALLED ON EITHER SIDE OF THE PIPES. RODS SHALL BE INSTALLED INSIDE SLEEVE.
4. PACK WITH MINERAL WOOL AND SEAL TOP AND BOTTOM WITH WATER PROOF CEMENT.
5. SEE DETAILS ON THIS DRAWING FOR WALL AND FLOOR PIPE PENETRATIONS.

US Army Corps of Engineers
New York District

Symbol	Description	Date	Appr.

Designed by: | Date: | Size: | Rev.
Dwn by: | Ckd by: | Drawing file no.: | Drawing code:
Reviewed by: | Plot date: 19-NOV-2004 15:54 | Plot for: 40scale
Submitted by: | Scale: SO_M509M0000

U.S. ARMY ENGINEER DISTRICT
CORPS OF ENGINEERS
NEW YORK, NEW YORK

File name: S:\Services\military\Niagara Falls\FBS\MEPS\Mechanical\MEPS M-509.dgn

PN 58873
MILITARY ENTRANCE PROCESSING STATION (MEPS)
NIAGARA FALLS, NEW YORK

MECHANICAL DETAILS-7

Sheet reference number:
M–509

Submitted by: e3jetmee
Saffiler:admin:User:phillipgro Fail: AFBANE:Mechanical:MEPS M-509.dgn
Plot Dates: 19-NOV-2004 15:54

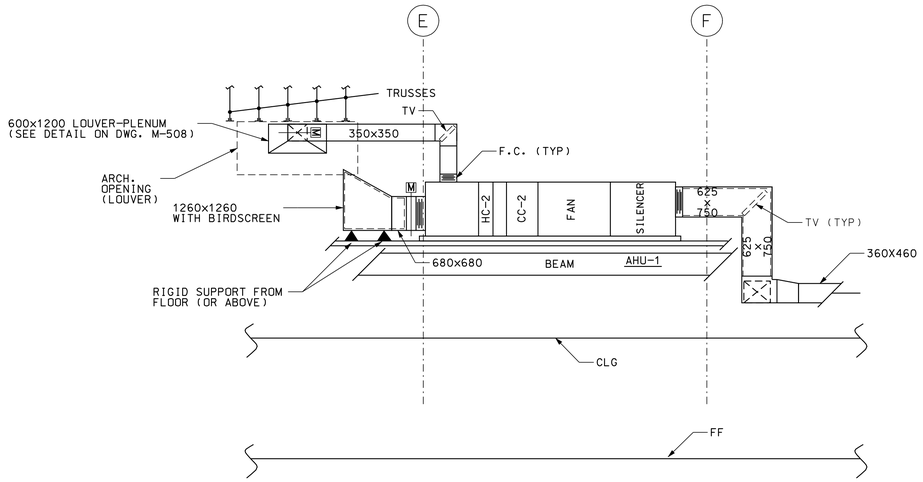

A
M-100 | M-510
ELEVATION A-A
SCALE 1:50

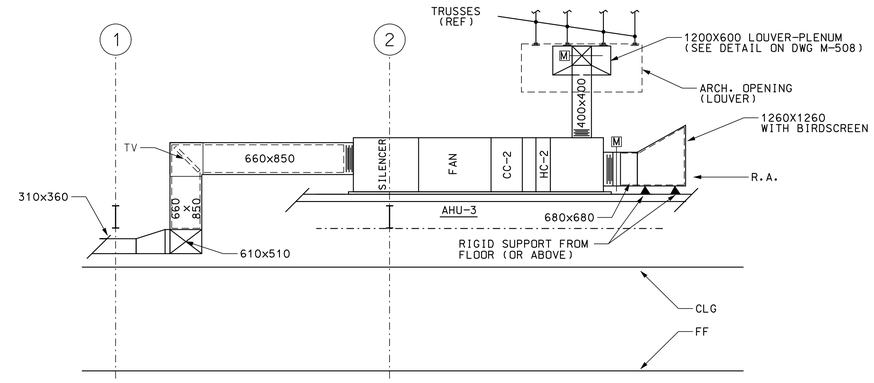

B
M-100 | M-510
ELEVATION B-B
SCALE 1:50

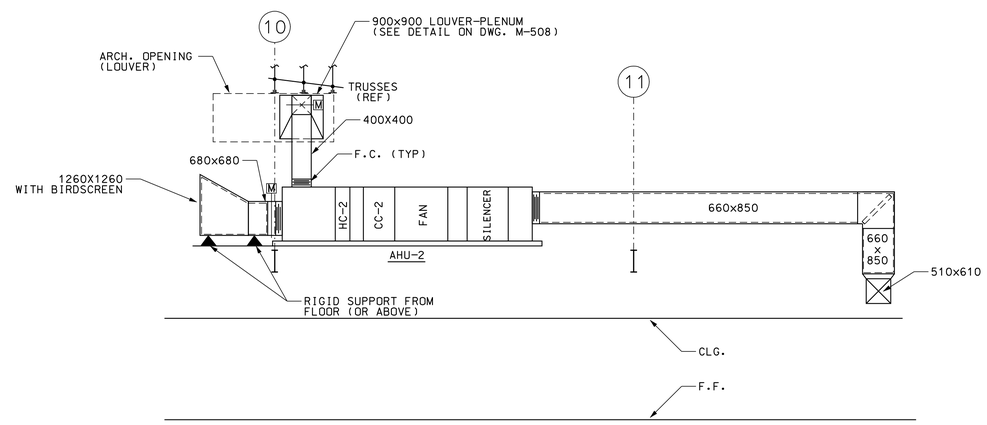

C
M-100 | M-510
ELEVATION C-C
SCALE 1:50

US Army Corps of Engineers
New York District

Symbol	Description	Date	Appr.
90% SUBMISSION		10/04/04	
95% SUBMISSION		08/05/04	
100% SUBMISSION		03/05/04	

U.S. ARMY ENGINEER DISTRICT
CORPS OF ENGINEERS
NEW YORK, NEW YORK

Designed by: | Date: | Size: | Rev.:
Dwn by: | Ckd by: | Drawing file no.:
Reviewed by: | Drawing code:
Submitted by: | Plot date: 19-NOV-2004 15:54 | Plot by: ADMINHW | Plot file: ISO_FDT0000000
File name: S:\Benson\military\Niagara_Falls\MEPS\Mechanical\MEPS_M-510.dgn

MILITARY ENTRANCE PROCESSING STATION (MEPS)
NIAGARA FALLS, NY
PN 58873

MECHANICAL PART PLANS

Sheet reference number:
M-510

Submitted by: e3jehmee
Saved by: admin(nwp)phillipsre Full AFBANDS:Mechanical:MEPS M-510.dgn
Plot Date: 19-NOV-2004 15:54

AIR HANDLING UNIT SCHEDULE

UNIT NO.	SUPPLY FAN					COOLING COIL																HEATING COIL											REMARKS
	AREA SERVED	LS		TOTAL	MOTOR	UNIT NO.	ENT AIR (°C)		LVG AIR (°C)		FACE VEL (MAX) M/S	APD MAX (MM)	TOTAL CAPACITY KW	SENSIBLE CAPACITY KW	LATENT CAPACITY KW	CHILLED WATER/DIRECT EXPANSION						UNIT NO.	HTG. CAP. (KW)	AIR			HOT WATER						
		O.A.	TOTAL	PA	W		DB	WB	DB	WB						L/S	EWT (°C)	LWT (°C)	PD (MM)	NUMBER OF ROWS				EAT (°C)	LAT (°C)	PD(MM)	ENT (°C)	LVG (°C)	L/S	PD(MM)	NUMBER OF ROWS		
AHU-1	RMS 122-126, 128-137, 140-147	460	3712	1094	11186	CC-1	24.6	18.9	12.8	12.6	2.54	16.0	80.54	54.17	26.37	3.76	7.2	12.8	6188	6		HC-1	43.30	16.7	26.4	4.07	93	82	0.97	28.20	1		SEE NOTES 1, 2, 3, 4, 5, 6
AHU-2	RMS 101, 102, 149-169 172-174	847	3488	1057	7457	CC-2	25.3	20.1	12.8	12.6	2.54	14.8	91.29	54.11	37.18	4.25	7.2	12.8	7925	6		HC-2	54.93	12.6	25.6	3.05	93	82	1.23	15.75	1		SEE NOTES 1, 2, 3, 4, 5, 6
AHU-3	RMS 102-116, 118-120	824	3934	1057	11186	CC-3	25.1	19.4	12.8	12.6	2.54	13.21	97.63	62.27	35.36	4.55	7.2	12.8	6279	6		HC-3	56.99	14.1	25.6	3.31	93	82	1.28	13.72	1		SEE NOTES 1, 2, 3, 4, 5, 6

NOTES:
1- AHU - 1, 2, 3 SHALL HAVE FILTERED MIXING BOX, PREHEAT COIL, ACCESS MODULE (DOORS BOTH SIDES), CHILLED WATER COIL, FAN MODULE, ACCESS MODULE (DOORS BOTH SIDES), SILENCER MODULE, ACCESS MODULE(DOORS BOTH SIDES) AND VARIABLE SPEED DRIVE.
2- AHU - 1, 2, 3 SHALL HAVE DOUBLE WALL CASING FOR NOISE REDUCTION,
3- PROVIDE LOCAL SAFETY DISCONNECT SWITCH.
4- COOLING COIL PERFORMANCE DATA IS BASED ON 40% PROPYLENE GLYCOL.
5- HEATING COIL PERFORMANCE DATA IS BASED ON 40% PROPYLENE GLYCOL.
6- FREEZESTATS SHALL BE FACTORY INSTALLED. FREEZESTATS SHALL BE MANUAL RESET, LOW TEMPERATURE SAFETY THERMOSTATS WITH NO AND NC CONTACTS AND A 6096 MM ELEMENT WHICH SHALL RESPOND TO THE COLDEST 460 MM SEGMENT.

AIR SEPARATOR SCHEDULE

UNIT NO.	SYSTEM SERVED	MIN. CAP L/S	DIMENSION MM (IN) (L x H x W)	OUTLET/INLET SIZE/CLASS MM	INLET/OUTLET FACE-FACE DIM. MM	APPR. WT KG	REMARKS
AS-1	HEATING	10.7	430x635x230	80/80	430	43.0	SEE NOTE 1
AS-2	COOLING	13.9	510x760x310	100/100	510	75.0	SEE NOTE 1

NOTES
1- ASME WITH STRAINER

AIR COOLED LIQUID CHILLER SCHEDULE

UNIT NO.	CHILLER							COMPRESSOR				CONDENSER					REMARKS
	KW (NOM.) @ 34.65°C AMBIENT AIR	L/S	TEMP (°C)		PRESS DROP (MAX) (MM)	EER	INPUT KW/TON	NOM SIZE (KW)	VOLT/ PHASE	STEPS OF UNLOADING	NO. OF COMP.	NOM. SIZE (KW)	NO. OF COILS	CONDENSER FANS			
			IN	OUT										NO. OF FANS	W	VOLT/ PHASE	
CH-1	319.3	13.9	12.8	7.2	4877	9.9	99.8/90.8	316.6	208/3	100-75-50-25	2	316.6	4	5/4	745.7	208/3	SEE NOTES 1, 2,3,4

NOTE:
1-PROVIDE REDUCED VOLTAGE STARTERS FOR EACH COMPRESSOR.
2-UNIT SHALL BE COMPATIBLE WITH AHU-1, 2, 3.
3-CHILLER SHALL BE OPERATED WITH 40% PROPYLENE GLYCOL.
4-PROVIDE LOCAL SAFETY DISCONNECT SWITCH.

EXPANSION TANK SCHEDULE

UNIT NO.	SYSTEM SERVED	CAPACITY L	DIMENSION MM DIA x H	PRESSURE KG/MM²		CODE STAMP	REMARKS
				MAXIMUM WORKING	FACTORY AIR CHARGE		
ET-1	HOT WATER HEATING SYSTEM	299.6	610 x 1330	0.087	0.008	ASME	----
ET-2	COOLING	200.6	610 x 975	0.087	0.008	ASME	----

DUCTLESS SPLIT SYSTEM AIR CONDITIONING UNIT SCHEDULE

INDOOR UNIT					OUTDOOR UNIT				REMARKS
UNIT NO.	DRY L/S HI-LO	MOISTURE REMOVAL L/H	DIMENSIONS (MM) WxDxH	APPR. WT KG	UNIT NO.	TOTAL COOLING CAPACITY KW	DIMENSIONS (MM) WxDxH	APPR. WT KG	
AC-1	335-250	3.4	1400x230x330	24	DX-1	7.032	860x310x1245	94	SEE NOTES 1,2,3,4

NOTES
1. PROVIDE LOW AMBIENT CONTROLS
2. UNIT SHALL BE PROVIDED WITH A CRANKCASE HEATER.
3. UNIT SHALL BE THERMOSTATICALLY CONTROLLED.
4. FOR ELECTRICAL CHARACTERISTICS, SEE ELECTRICAL DRAWINGS.

BOILER SCHEDULE

UNIT NO.	LOCATION	HOT WATER KG/MM²	KW		TEMP °C		FIRING RATE				FORCED DRAFT FAN W	REMARKS
			IBR GROSS OUTPUT	IBR NET RATING	EWT	LWT	OIL		GAS			
							TYPE	L/M	TYPE	KW		
B-1	MECH RM 139	.03	189.2	164.6	82	93	—	—	NATURAL	236.7	—	SEE NOTE 1, 2
B-2	MECH RM 139	.03	189.2	164.6	82	93	—	—	NATURAL	236.7	—	SEE NOTE 1, 2
B-3	MECH RM 139	.03	189.2	164.6	82	93	—	—	NATURAL	236.7	—	SEE NOTE 1, 2

NOTES:
1- PROVIDE LOCAL SAFETY DISCONNECT SWITCH.
2- HEATING HOT WATER SHALL BE OPERATED WITH 40% PROPYLENE GLYCOL.

BASEBOARD HEATER SCHEDULE

UNIT NO.	EWT (°C)	LWT (°C)	PIPE		FINS		WATTS PER MM	LENGTH (MM)	TOTAL WATTS	L/S	ENCLOSURE TYPE	REMARKS
			TYPE	SIZE (MM)	TYPE	SIZE (MM)						
BB-1	93.3	82.2	COPPER	19.1	ALUM.	54x54x0.20	0.826	610	504	0.063	STAINLESS STEEL	SEE NOTE 1,2,3
BB-2	↓	↓	↓	↓	↓	↓	↓	1830	1512	↓	↓	↓
BB-3	↓	↓	↓	↓	↓	↓	↓	3048	2517	↓	↓	↓
BB-4	↓	↓	↓	↓	↓	↓	↓	3657	3020	↓	↓	↓

NOTES:
1- ALL BASEBOARDS SHALL BE PROVIDED WITH NON-ELECTRIC THERMOSTATICALLY CONTROLLED SUPPLY VALVES TO MAINTAIN ROOM TEMPERATURE AT 12.8 DEGREES CELSIUS.
2- BOTTOM OF BASEBOARD ENCLOSURE SHALL BE MOUNTED 150 MM ABOVE FINISHED FLOOR.
3- PERFORMANCE BASED ON 40% PROPYLENE GLYCOL.

UNIT HEATER SCHEDULE

UNIT NO.	LOCATION	KW	AIR DATA		HOT WATER DATA			TYPE	W	REMARKS
			L/S	EAT °C	EWT °C	LWT °C	L/S			
UH-1	ROOM 138	2.35/1.99	116/99	15	93	82	.051	HORIZONTAL PROPELLER	9	SEE NOTES 1,2,3,4
UH-2	ROOM 139	7.26/6.22	274/217	15	93	82	.158	HORIZONTAL PROPELLER	15.81	SEE NOTES 1,2,3,4

NOTES:
1- UNIT SHALL BE THERMOSTATICALLY CONTROLLED.
2- PROVIDE LOCAL SAFETY DISCONNECT SWITCH.
3- PROVIDE VARIABLE SPEED CONTROLLER.
4- HEATING COIL PERFORMANCE DATA IS BASED ON 40% PROPYLENE GLYCOL.

GLYCOL MAKE-UP PACKAGE

DESIGNATION	LOCATION	SYSTEM SERVED	MAKE-UP CAPACITY LITERS/MIN.@KPa	MOTOR SIZE WATTS	PRESSURE RANGE KPa	SOLUTION CONTAINER LITERS	DIMENSIONS (HEIGHT X DIA.) cm x cm	REMARKS
GMP-1	MECH ROOM # 139	HVAC PIPING HEATING LOOP	6.81@345	250	69-345	190	108X71	See NOTES 1 ,2, 3
GMP-2	MECH ROOM # 139	HVAC PIPING COOLING LOOP	6.81@345	250	69-345	190	108X71	See NOTES 1 ,2, 3

NOTES:
1. UNIT SHALL INCUDE: SOLUTION CONTAINER AND LID (TRANSLUCENT POLYETHYLENE CONTAINER), PUMP, MOTOR, MAGNETIC STARTER, STAINER, SHUT-OFF VALVE, RELIEF VALVE, PRIMING VALVE, PRESSURE REDUCING VALVE (PRV), PRESSURE GAUGE, PRESSURE TANK AND PRESSURE CONTROL.
2. UNIT SHALL FEATURE A CUT-OFF AND ALARM ARRANGEMENT WHICH WILL STOP THE PUMP IN CASE OF EXCESSIVE PRESSURE, OR A LOW SOLUTION LEVEL, AND ACTIVATE AN AUDIBLE ALARM (WHICH CAN BE SILENCED) AND A VISUAL ALARM.
3. SETTING FOR FILL PRESSURE OF PRV WILL BE 82.8 Pka.

PUMP SCHEDULE

UNIT NO.	LOCATION	SYSTEM SERVED	L/S	TDH MM	DESIGN PRESSURE KG/MM²	TEMP °C		WATTS	TYPE	REMARKS
						MIN	MAX			
HWP-1	MECH RM 139	HEATING	10.7	24384	0.12	4.4	104.4	5592	CENTRIFUGAL	NOTES 2, 3, 4, 7
HWP-2	MECH RM 139	HEATING	10.7	24384	0.12	4.4	104.4	5592	CENTRIFUGAL	NOTES 2, 3, 4, 7
PHWP-1	MECH RM 139	PRIMARY HOT WATER	3.53	10364	0.12	4.4	104.4	1119	CENTRIFUGAL	NOTES 1, 4, 5, 7
PHWP-2	MECH RM 139	PRIMARY HOT WATER	3.53	10364	0.12	4.4	104.4	1119	CENTRIFUGAL	NOTES 1, 4, 5, 7
PHWP-3	MECH RM 139	PRIMARY HOT WATER	3.53	10364	0.12	4.4	104.4	1119	CENTRIFUGAL	NOTES 1, 4, 5, 7
CHWP-1	MECH RM 139	COOLING	13.9	24384	0.12	4.4	104.4	5592	CENTRIFUGAL	NOTES 2, 3, 4, 6
CHWP-2	MECH RM 139	COOLING	13.9	24384	0.12	4.4	104.4	5592	CENTRIFUGAL	NOTES 2, 3, 4, 6
DHWCP-1	MECH RM 139	DOMESTIC HOT WATER	0.32	5180	0.12	4.4	104.4	124	CENTRIFUGAL	NOTES 1,4

NOTES:
1. IN-LINE CENTRIFUGAL
2. CENTRIFUGAL, END SUCTION, BASE MOUNTED
3. PUMPS PIPED IN PARALLEL.
4. PROVIDE A LOCAL DISCONNECT SAFETY SWITCH AND A SET OF ISOLATION VALVES FOR EACH PUMP FOR MAINTENANCE.
5. PRIMARY HOT WATER PUMPS (PHWP-1,2,3) SHALL BE CONSTANT SPEED AND INTERLOCKED WITH THEIR RESPECTIVE BOILERS (B-1,2,3).
6. CHILLED WATER PUMPS SHALL OPERATE ON 40% PROPYLENE GLYCOL.
7. HOT WATER PUMPS SHALL OPERATE ON 40% PROPYLENE GLYCOL.

US Army Corps of Engineers
New York District

U.S. ARMY ENGINEER DISTRICT
CORPS OF ENGINEERS
NEW YORK, NEW YORK

Designed by: | Dwn by: | Ckd by: | Reviewed by: | Submitted by:
Date: | Size: | Rev.:
Drawing file no.:
Drawing code:
Plot date: 19-NOV-2004 15:54
Plot by: e3jetmwe
Scale: 50.000000:1.000000
File name: S:\fileroom\military\Niagara Fall AFB\MEPS\Mechanical\MEPS M-600.dgn

PN 59873
MILITARY ENTRANCE PROCESSING STATION (MEPS)
NIAGARA FALLS, NY

MECHANICAL SCHEDULES-1

Sheet reference number:
M-600

Symbol | Description | Date | Appr.

FAN POWERED V.A.V. TERMINAL BOX SCHEDULE

UNIT No.	FAN CAPACITY (L/S) MAX.	FAN CAPACITY (L/S) MIN.	MIN. SP (Pa)	REHEAT COIL KW	REHEAT COIL WATER TEMP. DROP (°C)	REHEAT COIL L/S	FAN MOTOR (W)	MAXIMUM SOUND RATING (NC)	REMARKS
VAV-1-1	160	50	25	2.31	-6.7	0.050	49.21	30	SEE NOTES 1, 2, 3, 4
VAV-1-2	116	35		1.99		0.043	49.21		
VAV-1-3	186	57		2.27		0.049	49.21		
VAV-1-4	241	241		8.87		0.191	93.21		
VAV-1-5	264	80		2.95		0.063	93.21		
VAV-1-6	224	66		3.49		0.075	93.21		
VAV-1-7	94	24		1.04		0.022	49.21		
VAV-1-8	94	24		1.04		0.022	49.21		
VAV-1-9	132	40		2.15		0.046	93.21		
VAV-1-10	94	24		1.04		0.022	49.21		
FPVAV-11	300	90		3.30		0.071	93.21		
VAV-1-12	99	28		1.04		0.022	49.21		
VAV-1-13	373	111		4.08		0.088	248.31		
VAV-1-14	142	42		1.56		0.034	49.21		
VAV-1-15	307	92		3.39		0.073	93.21		
VAV-1-16	918	274		10.09		0.217	372.85		
VAV-2-1	392	118		4.35		0.094	248.31		
VAV-2-2	354	106		3.91		0.084	248.31		
VAV-2-3	252	75		3.21		0.069	93.21		
VAV-2-4	118	35		1.30		0.028	49.21		
VAV-2-5	104	31		1.39		0.030	49.21		
VAV-2-6	113	33		1.21		0.026	49.21		
VAV-2-7	286	85		3.89		0.084	93.21		
VAV-2-8	146	45		1.65		0.035	49.21		

NOTES:
1. PROVIDE A PRESSURE INDEPENDENT SERIES FAN POWERED VAV BOX WITH NEC APPROVED STARTER.
2. VAV BOXES SHALL BE LINED WITH A MINIMUM OF 25 MM ACCOUSTICAL INSULATION.
3. PROVIDE LOCAL SAFETY DISCONNECT SWITCH.
4. PERFORMANCE BASED ON 40% PROPYLENE GLYCOL.

FAN POWERED V.A.V. TERMINAL BOX SCHEDULE

UNIT No.	FAN CAPACITY (L/S) MAX.	FAN CAPACITY (L/S) MIN.	MIN. SP (Pa)	REHEAT COIL KW	REHEAT COIL WATER TEMP. DROP (°C)	REHEAT COIL L/S	FAN MOTOR (W)	MAXIMUM SOUND RATING (NC)	REMARKS
VAV-2-9	142	42	25	1.78	-6.7	0.038	49.21	30	SEE NOTES 1, 2, 3, 4
VAV-2-10	245	73		2.69		0.058	93.21		
VAV-2-11	146	45		1.66		0.035	49.21		
VAV-2-12	455	137		5.04		0.109	248.31		
VAV-2-13	113	33		1.66		0.035	49.21		
VAV-2-14	234	70		2.61		0.056	248.31		
VAV-2-15	123	123		4.52		0.097	49.21		
VAV-2-16	94	24		1.04		0.022	49.21		
VAV-2-17	170	73		2.75		0.059	248.31		
VAV-3-1	330	99		3.65		0.078	248.31		
VAV-3-2	283	85		3.57		0.077	93.21		
VAV-3-3	352	104		3.82		0.082	248.31		
VAV-3-4	101	31		1.13		0.024	49.21		
VAV-3-5	236	71		2.61		0.056	93.21		
VAV-3-6	141	42		1.56		0..034	49.21		
VAV-3-7	269	80		2.95		0.063	93.21		
VAV-3-8	94	94		3.48		0.075	49.21		
VAV-3-9	132	40		1.47		0.032	49.21		
VAV-3-10	160	47		1.74		0.037	49.21		
VAV-3-11	415	125		4.61		0.099	248.31		
VAV-3-12	354	106		3.91		0.084	248.31		
VAV-3-13	193	59		2.17		0.047	93.21		
VAV-3-14	377	113		4.17		0.090	248.31		
VAV-3-15	366	109		4.00		0.086	248.31		

EXHAUST/SUPPLY FAN SCHEDULE

UNIT NO.	LOCATION	AREA SERVED	L/S	Pa	ROOF/ WALL OPENING	RPS	DRIVE	WATTS	TYPE	REMARKS
EF-1	CORRIDOR RM 106A	RMS 113, 114, 117	118.00	187.00	—	17.51	DIRECT	216.26	CENTRIFUGAL IN-LINE	SEE NOTES 1,2,3,5,6
EF-2	ELECTRIC RM 138	RM 138	227.00	93.24	610	19.00	DIRECT	93.22	PROPELLER	SEE NOTES 1,2,4,5,6
EF-3	STATION NCO RM 132	RMS 133, 134, 136	538.00	249.00	—	36.14	BELT	560.00	CENTRIFUGAL IN-LINE	SEE NOTES 1,2,3,5,6,7
EF-4	MALE ORTHO RM 153	RMS 149,150,156.159, 162,170,171,172,173	1003.00	249.00	—	23.62	BELT	745.70	CENTRIFUGAL IN-LINE	SEE NOTES 1,2,3,5,6,7
SF-1	MECH RM 139	MECH RM 139	1019.42	187.00	—	35.36	BELT	745.70	CENTRIFUGAL IN-LINE	SEE NOTES 1,2,4,5,6

NOTES:
1- PROVIDE LOCAL SAFETY DISCONNECT SWITCH.
2- INTERLOCK WITH EXHAUST MOTORIZED DAMPER.
3- EF-1 SHALL BE INTERLOCKED WITH AHU-3. SEE SEQUENCE OF OPERATIONS ON CONTRACT DRAWINGS.
EF-3 SHALL BE INTERLOCKED WITH AHU-1. SEE SEQUENCE OF OPERATIONS ON CONTRACT DRAWINGS.
EF-4 SHALL BE INTERLOCKED WITH AHU-2. SEE SEQUENCE OF OPERATIONS ON CONTRACT DRAWINGS.
4- HOA THERMOSTATICALLY CONTROLLED.
5- FOR ELECTRICAL CHARACTERISTICS, SEE ELECTRICAL DRAWINGS.
6- PROVIDE STARTERS INTEGRAL WITH UNIT.
7- EF-3 AND EF-4 SHALL BE LINED WITH ACOUSTICAL INSULATION.

US Army Corps of Engineers
New York District

Symbol | Description | Date | Appr.

Size | Rev.
Date:
Designed by:
Dwn by: | Ckd by:
Drawing file no.:
Drawing code:
Reviewed by:
Submitted by:
Plot date: 19-NOV-2004 15:54
Plot by: e3jemiwe
Date: 10/08/2004
File name: S:\Division\Hvac\Hangars, Fall AT\MEP\Mechanical\MEPS M-601.dgn

U.S. ARMY ENGINEER DISTRICT
CORPS OF ENGINEERS
NEW YORK, NEW YORK

PN 59873
MILITARY ENTRANCE PROCESSING STATION (MEPS)
WANAQUE, NEW JERSEY

MECHANICAL SCHEDULES-2

Sheet reference number:
M–601

Submitted by: e3jemiwe
perforce-admin://p4/hvac/ft Fall AT/MEP/Mechanical/MEPS M-601.dgn
Plot Date: 19-NOV-2004 15:54

GRILLE/DIFFUSER/REGISTER SCHEDULE

MARK	L/S	LOCATION (ROOM)	DIFFUSER /GRILLE TYPE	NECK SIZE (MM)	FUNCTION	THROW (MM)	REMARKS
1	24	ROOM 107, 113, 114 119, 141, 148, 161	CEILING DIFFUSER	150x150	SUPPLY	1525	SEE NOTES 1, 2, 3, 4
2	28	ROOM 160				1525	
3	38	ROOM 110, 115, 116 153, 159, 162, 163				2135	
4	42	ROOM 157, 158					
5	47	ROOM 106A, 122, 126 130, 135, 165					
6	50	ROOM 140					
7	52	ROOM 106, 167, 172					
8	54	ROOM 108, 149					
9	57	ROOM 129					
10	59	ROOM 151					
11	61	ROOM 152A		230x230			
12	65	ROOM 150					
13	71	ROOM 173					
14	78	ROOM 120					
15	80	ROOM 166				3050	
16	83	ROOM 143					
17	87	ROOM 145, 152, 156					
18	92	ROOM 103, 152					
19	94	ROOM 104, 109, 118					
20	109	ROOM 128				3352	
21	116	ROOM 128					
22	118	ROOM 133					
23	123	ROOM 134					
24	139	ROOM 121B		310x310		3050	
25	142	ROOM 105				3050	
26	153	ROOM 146, 147				3960	
40	78	ROOM 102		230x230		2135	
41	117	ROOM 102		230x230		3355	
50	274	ROOM 102	GRILLE	410	RETURN	——	SEE NOTES 1, 2, 3, 4, 5
A	24	ROOMS 117, 170, 171	REGISTER	200x150	EXHAUST		SEE NOTES 1, 2, 3
B	35	ROOMS 113, 114, 156 172					
C	47	ROOMS 117, 133, 134, 136, 170					
D	64	ROOM 133					
E	68	ROOM 134		260x150			
F	71	ROOMs 149, 162, 172 173					
G	99	ROOM 159					
H	132	ROOM 150					
IB	134	ROOM 150					
J	142	ROOM 156					

NOTES:
1. FOR ALL GRILLES, DIFFUSERS AND REGISTERS, THE MAXIMUM STATIC PRESSURE LOSS IS 49.73 Pa.
2. PROVIDE ADJUSTABLE VOLUME CONTROL FOR ALL UNITS.
3. FOR ALL GRILLES, DIFFUSERS AND REGISTERS, THE MAXIMUM NC SHALL BE 30.
4. CEILING DIFFUSERS SHALL BE IN A 610 MM X 610 MM CEILING GRID.
5. GRILLE SHALL BE A PERFORATED CEILING TYPE STEEL RETURN 610x610 FLUSH FACE.

LINEAR DIFFUSER SCHEDULE

SYMBOL	SLOT NUMBER	SLOT SUPPLY (MM)	NOMINAL INLET DIMENSION (MM)	MAXIMUM RATING L/S	MAXIMUM RATING Pa	LENGTH (MM)	REMARKS
1	2	25	150	40	21.38	1220	SEE NOTE 1
2				42			
3				45			
4				47			
5				52			
6				54			
7				57			
8				59			
9				64			
10				66			
11				71			
12		40		75	21.39		
13				80			
14				83			
15			200	90	16.17		
16			200	92	16.17		
16A			200	94	16.17		
17			260	104	9.95		
18				116	15.17		
19				118			
20				123			
21			310	132	13.68		
22				137			
23				142			
24				144			
25				170	25.37		

NOTE:

1- REFERENCE DETAIL ON SHT. M-506 FOR OPENING SIZE DIMENSIONS.

US Army Corps of Engineers
New York District

Symbol | Description | Date | Appr.

FWB

U.S. ARMY ENGINEER DISTRICT
CORPS OF ENGINEERS
NEW YORK, NEW YORK

Designed by: | Date: | Size: | Rev.:
Dwn by: | Ckd by: | Drawing file no.:
Reviewed by: | Drawing code:
Submitted by: | Pnt date: 19-NOV-2004 15:54 | Plot by: ADMINW | Plotter: sc_1000x1000000
File name: S:\Services\military\Niagara Fall\AFB\MEPS\Mechanical\MEPS M-602.dgn

PN 58973
MILITARY ENTRANCE PROCESSING STATION (MEPS)
NIAGARA FALLS, NY

MECHANICAL SCHEDULES-3

Sheet reference number:
M–602

Submitted by: e3jetmew
Saved by: admin1 on jetdugan in Fall AFB\MEPS\Mechanical\MEPS M-602.dgn
Plot Date: 19-NOV-2004 15:54

W-X-Y-Z
••

DEVICE SYMBOL, GENERIC
USED TO REPRESENT SENSORS, INSTRUMENTS
SAFETIES, AND OTHER CONTROL DEVICES
W-X-Y-Z : (SEE ABBREVIATIONS AND ACRONYMS)
GENERIC USAGE TO SHOW LOCATION OF DEVICE; PROCESS OR DEVICE BEING MEASURED OR CONTROLLED; SIGNAL TYPE; MODIFIERS AND OTHER APPLICATION INFORMATION

W-X-Y-Z
••

DEVICE SYMBOL, GENERIC
MULTIPLE OUTPUT DEVICE WHERE AT LEAST 1 OUTPUT IS ALWAYS SAFETY INTERLOCK

W-X-Y-Z
DDC
••
DIR
REV

DEVICE SYMBOL, CONTROLLER
DDC : DIRECT DIGITAL CONTROL
•• : DEVICE NUMBER
DIR : DIRECT CONTROL ACTION, OR
REV : REVERSE CONTROL ACTION
W-X-Y-Z : (SEE ABBREVIATIONS AND ACRONYMS)
GENERIC USAGE TO SHOW LOCATION OF DEVICE; PROCESS OR DEVICE BEING MEASURED OR CONTROLLED; SIGNAL TYPE; MODIFIERS AND OTHER APPLICATION INFORMATION

ACTUATOR, ELECTRIC

P
ACTUATOR, PNEUMATIC
WITH LOCALLY MOUNTED
PRESSURE GAGE

P
PP
M
ACTUATOR, PNEUMATIC
WITH POSITIVE POSITIONER
AND LOCALLY MOUNTED
PRESSURE GAGE

AFMA
AIR FLOW MEASUREMENT ARRAY,
WITH FLOW TRANSMITTER
SEE 'DEVICE SYMBOL, GENERIC'

BOILER

CHILLER

C
COIL, COOLING

DX
COIL, COOLING, DIRECT-EXPANSION

HC
COIL, HEAT/COOL (DUAL TEMPERATURE)

H
COIL, HEATING

PC
COIL, PRECOOL

PH
COIL, PREHEAT

CONTACT, PRESSURE, HIGH LIMIT (HL)
SHOWN IN ACTIVATED POSITION
OPEN WHEN PRESSURE IS ABOVE SETPOINT
CLOSED WHEN PRESSURE IS BELOW SETPOINT

CONTACT, PRESSURE, HIGH LIMIT (HL)
SHOWN IN UNACTIVATED POSITION
OPEN WHEN PRESSURE IS ABOVE SETPOINT
CLOSED WHEN PRESSURE IS BELOW SETPOINT

CONTACT, PRESSURE, LOW LIMIT (LL)
SHOWN IN ACTIVATED POSITION
OPEN WHEN PRESSURE IS BELOW SETPOINT
CLOSED WHEN PRESSURE IS ABOVE SETPOINT

CONTACT, PRESSURE, LOW LIMIT (LL)
SHOWN IN UNACTIVATED POSITION
OPEN WHEN PRESSURE IS BELOW SETPOINT
CLOSED WHEN PRESSURE IS ABOVE SETPOINT

CONTACT, TEMPERATURE, HIGH LIMIT (HL)
SHOWN IN ACTIVATED POSITION
OPEN WHEN TEMPERATURE IS ABOVE SETPOINT
CLOSED WHEN TEMPERATURE IS BELOW SETPOINT

CONTACT, TEMPERATURE, HIGH LIMIT (HL)
SHOWN IN UNACTIVATED POSITION
OPEN WHEN TEMPERATURE IS ABOVE SETPOINT

CONTACT, TEMPERATURE, LOW LIMIT (LL)
SHOWN IN ACTIVATED POSITION
OPEN WHEN TEMPERATURE IS BELOW SETPOINT
CLOSED WHEN TEMPERATURE IS ABOVE SETPOINT

CONTACT, TEMPERATURE, LOW LIMIT (LL)
SHOWN IN UNACTIVATED POSITION
OPEN WHEN TEMPERATURE IS BELOW SETPOINT
CLOSED WHEN TEMPERATURE IS ABOVE SETPOINT

CONTROL SIGNAL LINE, LOW VOLTAGE

CURRENT TRANSFORMER/SWITCH

DAMPER, BALANCING

D-••
DAMPER, PARALLEL BLADE
NORMALLY OPEN OR CLOSED AS SHOWN
•• = DAMPER NUMBER AS SHOWN
IN DAMPER SCHEDULE

D-••
DAMPER, OPPOSED BLADE
NORMALLY OPEN OR CLOSED AS SHOWN
•• = DAMPER NUMBER AS SHOWN
IN DAMPER SCHEDULE

HEAT EXCHANGER

MAIN AIR
MAIN AIR

M•
MOTOR

MS-•
MOTOR STARTER

RXX
RELAY COIL
XX = SEQUENTIAL RELAY
(SOLENOID) NUMBER

RXX-YY
RELAY COIL CONTACT
NORMALLY OPEN
XX = RELAY COIL NUMBER
YY = CONTACT NUMBER

RXX-YY
RELAY COIL CONTACT
NORMALLY CLOSED
XX = RELAY COIL NUMBER
YY = CONTACT NUMBER

CONTROL SCHEMATIC SYMBOLS

EPS
••
ELECTRIC-TO-PNEUMATIC SWITCH
(SOLENOID ACTUATED PNEUMATIC VALVE)
•• = SEQUENTIAL NUMBER
(WHEN MORE THAN 1 EPS)

EP
••
ELECTRIC-TO-PNEUMATIC TRANSDUCER
VDC OR MA INPUT / 3-15 PSI OUTPUT
•• = SEQUENTIAL NUMBER
(WHEN MORE THAN 1 EP)

FAN

FILTER

LDP
••
LOCAL DISPLAY PANEL
•• = SEQUENTIAL NUMBER
(WHEN MORE THAN 1 LDP)

PP
POSITIVE POSITIONER
SEE 'ACTUATOR, PNEUMATIC'

P
PRESSURE GAGE

P
H
L
PRESSURE SWITCH, DIFFERENTIAL, WITH GAGE
H = HIGH PRESSURE TAP
L = LOW PRESSURE TAP
SEE 'DEVICE SYMBOL, GENERIC'

PUMP

RADIATOR

RST-BUT
RESET BUTTON FOR SAFETY RESET

SMOKE DETECTOR, DUCT-MOUNTED
SEE 'DEVICE SYMBOL, GENERIC'

SWITCH, MANUAL

T
TEMPERATURE GAGE

TEMPERATURE SENSOR, AVERAGING
OR TEMPERATURE LOW LIMIT / FREEZESTAT
SEE 'DEVICE SYMBOL, GENERIC'

TEMPERATURE SENSOR, POINT
SEE 'DEVICE SYMBOL, GENERIC'

STAT
THERMOSTAT WITH SPECIFIED I/O FUNCTIONS

THERMOWELL IN PIPE

VALVE, BALANCING

V-••
NC
VALVE, NORMALLY CLOSED
WITH SPRING RETURN FAILSAFE
•• = VALVE NUMBER AS SHOWN
IN VALVE SCHEDULE

V-••
NO
VALVE, NORMALLY OPEN
WITH SPRING RETURN FAILSAFE
•• = VALVE NUMBER AS SHOWN
IN VALVE SCHEDULE

V-••
COM
NO
NC
VALVE, 3-WAY DIVERTING
WITH SPRING RETURN FAILSAFE
NO = NORMALLY OPEN
NC = NORMALLY CLOSED
COM = COMMON PORT
•• = VALVE NUMBER AS SHOWN
IN VALVE SCHEDULE

V-••
NO
COM
NC
VALVE, 3-WAY MIXING
WITH SPRING RETURN FAILSAFE
NO = NORMALLY OPEN
NC = NORMALLY CLOSED
COM = COMMON PORT
•• = VALVE NUMBER AS SHOWN
IN VALVE SCHEDULE

VFD
XX-C
XX-SS
XX-S
VARIABLE FREQUENCY DRIVE
XX = PROCESS/DEVICE BEING CONTROLLED

SS = START/STOP COMMAND
S = STATUS FEEDBACK (ON/OFF)
C = 4-20 MA, VDC, OR SNVT CONTROL SIGNAL

B
BINARY HARDWARE
INPUT

A
ANALOG HARDWARE INPUT

B
BINARY HARDWARE OUTPUT

A
ANALOG HARDWARE OUTPUT

ANALOG OR
BINARY SIGNAL
INPUT

ANALOG OR BINARY
SIGNAL OUTPUT

CONSTANT VALUE

IF___
CONDITIONAL
STATEMENT

IN
IN
MATH
OUT
GENERIC
MATH
FUNCTION AS
DEFINED

IN
IN
MIN
OUT
MINIMUM
SIGNAL
SELECTOR

IN
IN
MAX
OUT
MAXIMUM
SIGNAL
SELECTOR

IN
IN
PLUS
OUT
ADDITION
FUNCTION

IN
IN
MINUS
OUT
SUBTRACTION
FUNCTION

IN
RESET
OUT
RESET SCHEDULE
(OUTPUT INCREASES
AS INPUT INCREASES)

IN
RESET
OUT
RESET SCHEDULE (OUTPUT
DECREASES AS INPUT
INCREASES)

IN
OUT
LOGICAL NOT
FUNCTION

IN
IN
OUT
LOGICAL OR
FUNCTION

IN
IN
OUT
LOGICAL AND
FUNCTION

IN1
IN2
COMP
DB
OUT
DB=___
COMPARATOR WITH
DEADBAND (DB).
WHEN IN1>IN2
OUTPUT IS TRUE

IN
IN
S
LAT
R
B OUT
BINARY LATCH
S=SET
R=RESET

IN
HAND
OFF
OUT
H-O-A SWITCH

IN
OCC
UNOCC
OUT
H-O-A SWITCH

CONTROL
IN
NO
IN
NC
OUT
COM
SWITCH

IN
T=___ SEC
OUT
ON DELAY TIMER
OUT=IN AFTER
TIME DELAY

ENABLE
IN
VALUE
IN
SETPOINT
PID
OUT
DEFAULT
OUTPUT
PID LOOP WITH
ENABLE AND
DEFAULT
OUTPUT
WHEN NOT
ENABLED

CONTROL LOGIC DIAGRAM SYMBOLS

2P	TWO-POSITION (CONTROL SIGNAL)	I/O	INPUT/OUTPUT
ADJ	ADJUSTABLE	LDP	LOCAL DISPLAY PANEL
AFMA	AIRFLOW MEASUREMENT ARRAY	LL	LOW LIMIT
ALM	ALARM	M&C	MONITORING & CONTROL (SOFTWARE)
BA	BYPASS AIR	MA	MIXED AIR
BLDG	BUILDING	MINOA	MINIMUM OUTSIDE AIR
BUT	BUTTON	MS	MOTOR STARTER
C	COMMAND (MODULATING CONTROL SIGNAL)	N/A	NOT APPLICABLE
CD	COLD DECK	NC	NORMALLY CLOSED
CHLR	CHILLER	NO	NORMALLY OPEN
CLG	COOLING	OA	OUTSIDE AIR
CO2	CARBON DIOXIDE	OCC	OCCUPIED
COM	COMMON	ODT	ON DELAY TIMER
COMP	COMPARATOR	OWS	OPERATOR WORKSTATION
CR	CONDENSER WATER RETURN	P	PRESSURE
CS	CONDENSER WATER SUPPLY	PC	PRE-COOLING
CT	CURRENT TRANSFORMER/SWITCH	PCW	PRIMARY CHILLER WATER
CWR	CHILLED WATER RETURN	PCWR	PRIMARY CHILLER WATER RETURN
CWS	CHILLED WATER SUPPLY	PCWS	PRIMARY CHILLER WATER SUPPLY
CW	CHILLED WATER	PH	PREHEAT
D	DAMPER	PMP	PUMP
DA	DISCHARGE AIR	PP	POSITIVE POSITIONER
DB	DEADBAND	R	RELAY
DDC	DIRECT DIGITAL CONTROL(LER)	RA	RETURN AIR
DIFF	DIFFERENCE	REV	REVERSE (CONTROL ACTION)
DIR	DIRECT (CONTROL ACTION)	RF	RETURN FAN
DIS	DISABLE	RH	RELATIVE HUMIDITY
DT	DUAL TEMP	RLA	RELIEF AIR
DTWR	DUAL TEMP WATER RETURN	RM	ROOM
DTWS	DUAL TEMP WATER SUPPLY	RST	RESET
DX	DIRECT EXPANSION (UNIT)	S	STATUS
EA	EXHAUST AIR	SA	SUPPLY AIR
ECO	ECONOMIZER	SEC	SECONDARY
EF	EXHAUST FAN	SF	SUPPLY FAN
ENA	ENABLE	SMK	SMOKE
EP	ELECTRIC TO PNEUMATIC TRANSDUCER	SP	SETPOINT
EPS	ELECTRIC TO PNEUMATIC SWITCH	SS	START/STOP COMMAND
F	FLOW	STAT	THERMOSTAT
FAP	FIRE ALARM PANEL	SYS	SYSTEM
FLT	FILTER	SCHD	SCHEDULER
HD	HOT DECK	T	TEMPERATURE
HL	HIGH LIMIT	TAP	TAP, PRESSURE
HTG	HEATING	UNOCC	UNOCCUPIED
HTHW	HIGH TEMPERATURE HOT WATER	V	VALVE
HUM	HUMIDIFIER	VAV	VARIABLE AIR VOLUME
HW	HOT WATER	VFD	VARIABLE FREQUENCY DRIVE
HWR	HOT WATER RETURN	WB	WET BULB (TEMPERATURE)
HWS	HOT WATER SUPPLY	ZN	ZONE
HX	HEAT EXCHANGER		

ABBREVIATIONS AND ACRONYMS

US Army Corps of Engineers
New York District

Symbol | Description | Date | Appr.

Designed by: | Date: | Size: | Rev.
Dwn by: | Ckd by: | Drawing file no.:
Reviewed by: | Drawing code:
Submitted by: | Plot date: 19-NOV-2004 15:54 | Plot by: | Scale: 1:600mm | File: 600M0000.dgn
File name: S:\Services\Hydro\Niagara Falls\FUTURE\MEPS\Mechanical\MEPS M-700.dgn

U.S. ARMY ENGINEER DISTRICT
CORPS OF ENGINEERS
NEW YORK, NEW YORK

PN 58873
MILITARY ENTRANCE PROCESSING STATION (MEPS)
NIAGARA FALLS, NY

SYMBOLS & ABBREVIATIONS
CONTROLS

Sheet reference number:
M–700

Submitted by: a3jemwe
Service-Guardian(Hydro)Supra 6 Fall AFBMAST\Mechanical\MEPS M-700.dgn
Plot Date: 19-NOV-2004 15:54

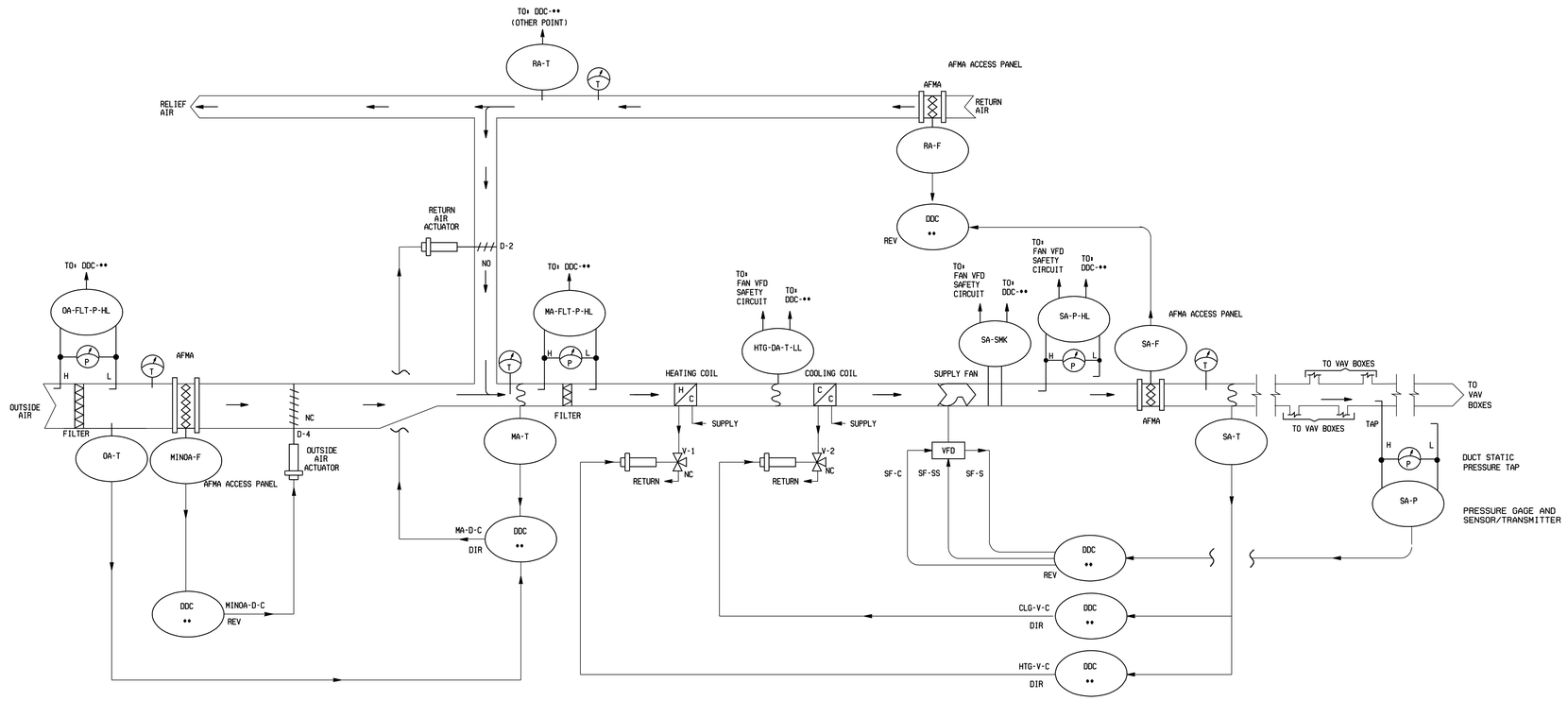

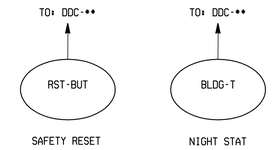

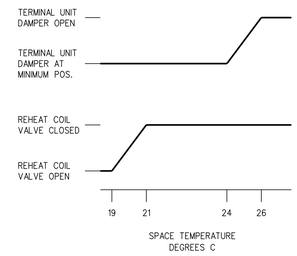

SENSOR SCHEDULE

IDENTIFIER	FUNCTION	RANGE
TT-XX-01	MIXED AIR TEMPERATURE TRANSMITTER	4 TO 60 DEG C
TT-XX-02	OUTSIDE AIR TEMPERATURE TRANSMITTER	-34 TO 54 DEG C
TT-XX-03	RETURN AIR TEMPERATURE TRANSMITTER	4 TO 60 DEG C
TT-XX-04	SUPPLY AIR TEMPERATURE TRANSMITTER	4 TO 60 DEG C
TT-XX-05	SPACE TEMPERATURE TRANSMITTER	10 TO 30 DEG C
DPT-XX-01	SUPPLY AIR STATIC PRESSURE TRANSMITTER	0 - 500 kPa

OPERATING PARAMETERS

FUNCTION	SETPOINT	REMARKS
MINIMUM OUTSIDE AIR		SEE SCHEDULE ON DRAWING M-600
MIXED AIR TEMPERATURE		SEE SCHEDULE ON DRAWING M-600
SUPPLY AIR TEMPERATURE	(21.1 DEG C) (24.4 DEG C)	(HEATING) (COOLING)
SPACE TEMP. (NIGHT SETBACK)	12.8 DEG C	(HEATING ONLY)
SUPPLY AIR STATIC PRESSURE		SEE SCHEDULE ON DRAWING M-600
OCCUPIED MODE		MONDAY - FRIDAY : 0535 HRS - 1730 HRS
VENT DELAY MODE		MONDAY - FRIDAY : 0430 HRS - 0530 HRS
FREEZESTAT	1.7 DEG C	
FILTER ALARM		SET ALARM AT .075 kPa ABOVE CLEAN FILTER READING

CONTROL VALVE SCHEDULE

IDENTIFIER	FUNCTION	TYPE	RANGE	Kv	CLOSE-OFF RATING	REMARKS
VLV-XX-01	COOLING COIL VALVE	3-WAY, MODULATING	21 - 103 kPa	XX	414 kPa	
VLV-XX-AA	HEATING COIL VALVE	3-WAY, MODULATING	21 - 103 kPa	XX	345 kPa	

CONTROL DAMPER SCHEDULE

IDENTIFIER	FUNCTION	TYPE	SIZE	RANGE	REMARKS
AD-XX-01	RETURN AIR	MODULATING	SEE DWG M-100, M-510	21 - 103 kPa	PARALLEL BLADE
AD-XX-02	MINIMUM OUTSIDE AIR	MODULATING	SEE DWG M-100, M-510	21 - 103 kPa	PARALLEL BLADE

US Army Corps of Engineers
New York District

Symbol	Description	Date	Appr.

U.S. ARMY ENGINEER DISTRICT
CORPS OF ENGINEERS
NEW YORK, NEW YORK

Designed by:
Dwn by:
Ckd by:
Reviewed by:
Submitted by:
Date:
Size:
Rev.:
Drawing file no.:
Drawing code:
Plot date: 19-NOV-2004 15:55
Plot for scale: 400mm
Plot file: 50_M701M0000
File name: S:\Benson\military\Niagara Falls\MEPS\Mechanical\MEPS M-701.dgn

MILITARY ENTRANCE PROCESSING STATION (MEPS)
NIAGARA FALLS, NY
PN 58873

AHU-1,2,3 CONTROL SCHEMATIC

Sheet reference number:
M–701

Submitted by: e3jetmee
Saffier\admin\User\Philippe\a Fall AFB\MEPS\Mechanical\MEPS M-701.dgn
Plot Date: 19-NOV-2004 15:55

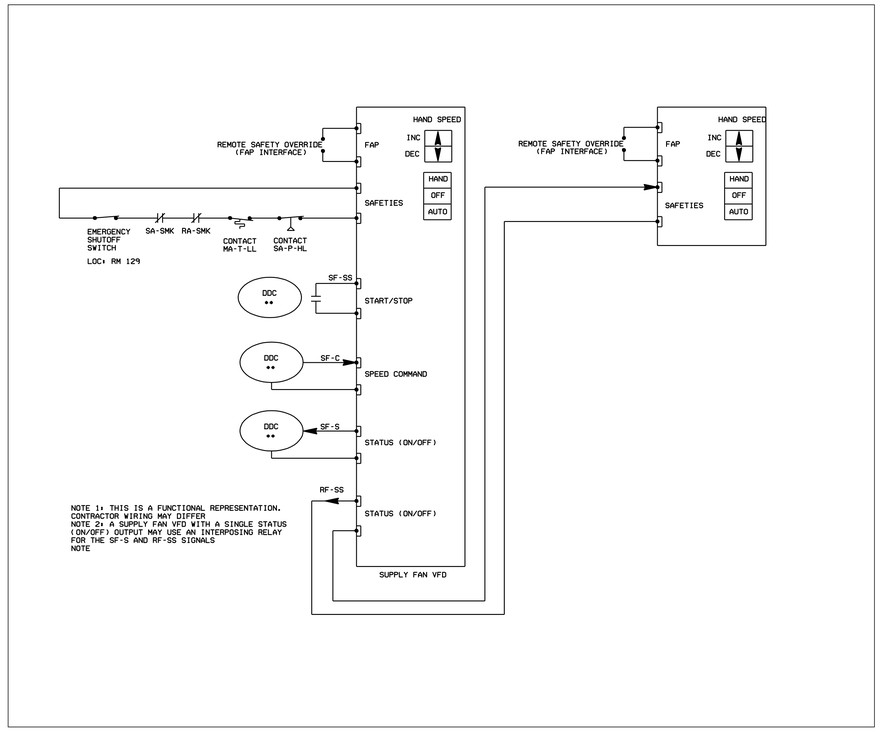

LADDER DIAGRAM

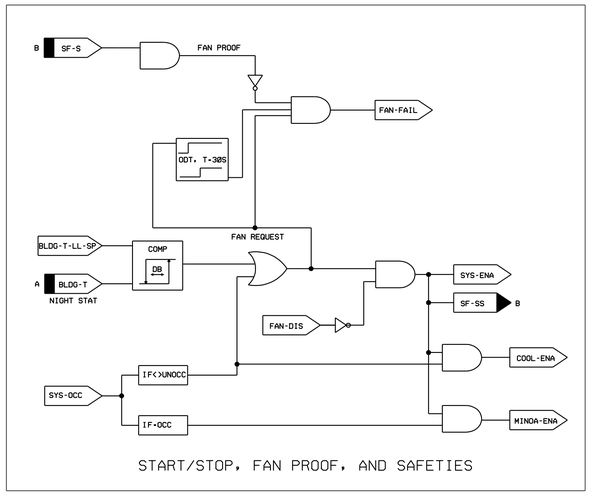

START/STOP, FAN PROOF, AND SAFETIES

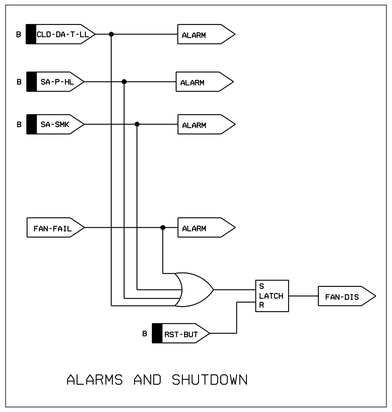

ALARMS AND SHUTDOWN

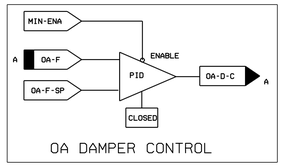

OA DAMPER CONTROL

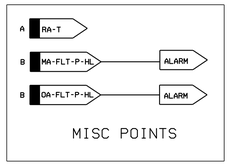

MISC POINTS

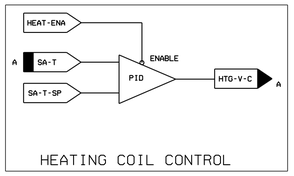

HEATING COIL CONTROL

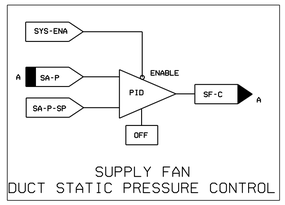

SUPPLY FAN
DUCT STATIC PRESSURE CONTROL

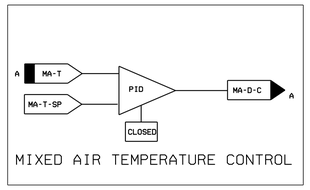

MIXED AIR TEMPERATURE CONTROL

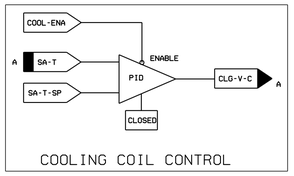

COOLING COIL CONTROL

CONTROL LOGIC DIAGRAMS

US Army Corps of Engineers
New York District

Symbol	Description	Date	Appr.

U.S. ARMY ENGINEER DISTRICT
CORPS OF ENGINEERS
NEW YORK, NEW YORK

Designed by:
Dwn by:
Ckd by:
Reviewed by:
Submitted by:
Date:
Drawing file no.:
Drawing code:
Plot date: 19-NOV-2004 15:55
Plot by: ADMIN
Scale: NONE
Size:
Rev.:
File name: S:\Services\military\Niagara Falls\AFB\MEPS\Mechanical\AHU1-6_M-702.dgn

MILITARY ENTRANCE PROCESSING STATION (MEPS)
NIAGARA FALLS, NY
PN 58873

AHU-1,2,3 CONTROL LOGIC DIAGRAMS

Sheet reference number:
M–702

Submitted by: e3jetmwe
Saved: admin (for) philippe.e Full AFB\MEPS\Mechanical\MEPS M-702.dgn
Plot Date: 19-NOV-2004 15:55

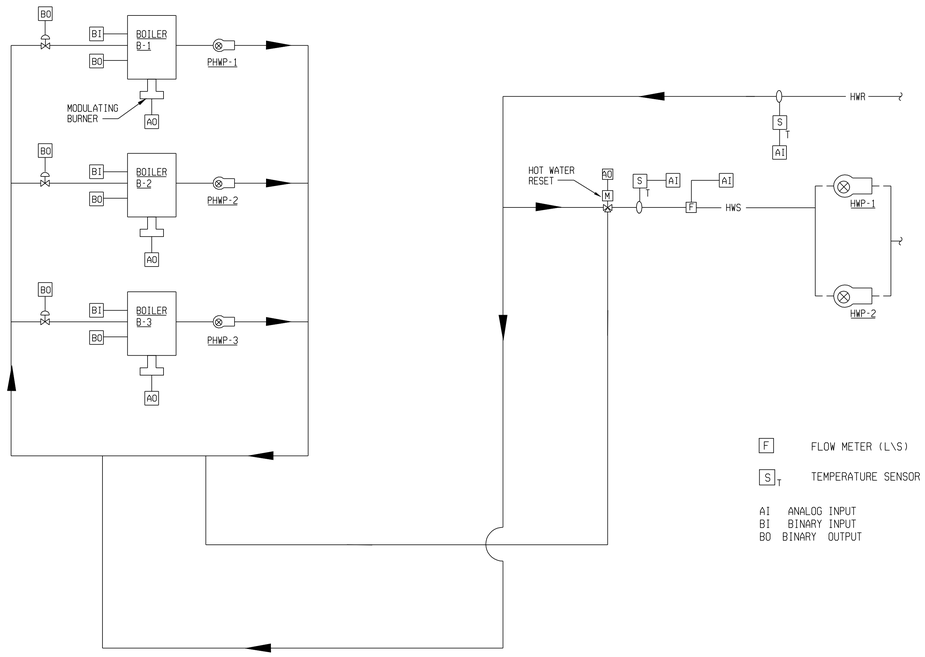

F FLOW METER (L\S)

S T TEMPERATURE SENSOR

AI ANALOG INPUT
BI BINARY INPUT
BO BINARY OUTPUT

CONTROL SYSTEM SCHEMATIC

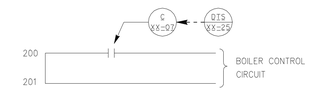

BOILER INTERLOCK

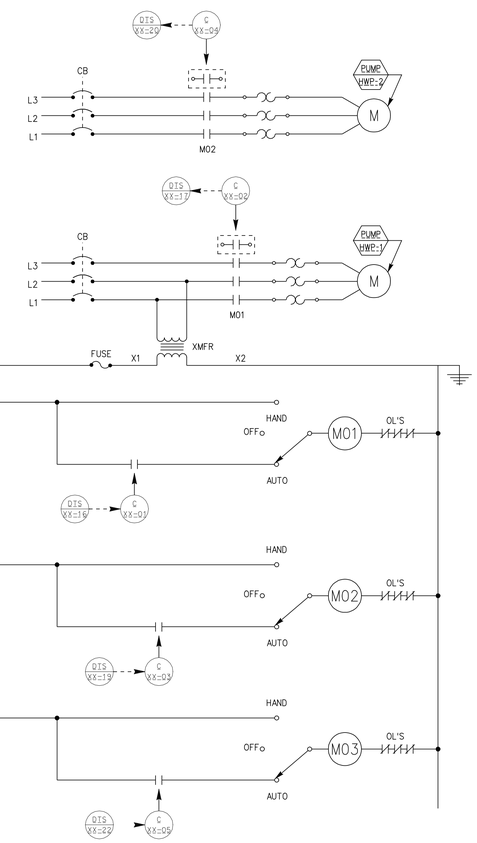

PUMP STARTER LADDER DIAGRAM

CONTROL VALVE SCHEDULE

FUNCTION	TYPE	RANGE	Kv	CLOSE-OFF RATING	REMARKS
PRIMARY SYSTEM VALVE	3-WAY, MODULATING	21 - 103 kPa	XX	9.95 kPa	

OPERATING PARAMETERS

FUNCTION	SETPOINT	REMARKS
OUTSIDE AIR TEMPERATURE		START PRIMARY PUMP AT OA TEMP = 15.6 DEG C STOP PRIMARY PUMP AT OA TEMP = 16.7 DEG C
HEATING SYSTEM SUPPLY TEMPERATURE	93 DEG C	OA TEMP = -13.9 DEG C: HEATING SYSTEM SUPPLY SETPOINT = 93 DEG C OA TEMP = 16 DEG C: HEATING SYSTEM SUPPLY SETPOINT = 60 DEG C

SENSOR SCHEDULE

FUNCTION	RANGE
OUTSIDE AIR TEMPERATURE TRANSMITTER	-35 TO +55 DEG C
PRIMARY SYSTEM SUPPLY TEMPERATURE TRANSMITTER	38 TO 121 DEG C

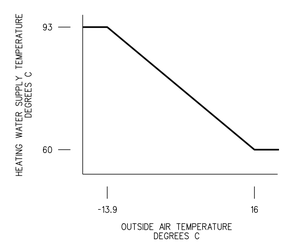

HW SUPPLY TEMPERATURE RESET SCHEDULE

US Army Corps of Engineers
New York District

Symbol	Description	Date	Appr.

U.S. ARMY ENGINEER DISTRICT
CORPS OF ENGINEERS
NEW YORK, NEW YORK

Designed by: | Date: | Size: | Rev.:
Dwn by: | Ckd by: | Drawing file no.:
Reviewed by: | Drawing code:
Submitted by: | Plot date: 19-NOV-2004 16:05 | Plot by: eddsjrwm | Status: No 100000100000

File name: S:\Mercom\Military\Niagara Falls\MEPS\Mechanical\MEPS M-703.dgn

MILITARY ENTRANCE PROCESSING STATION (MEPS)
NIAGARA FALLS, NY

BOILER CONTROL SCHEMATIC

Sheet reference number:
M-703

Submitted by: e3jhfmwe
Plot Date: 19-NOV-2004 15:55
Plot Scale: 1:1
Plot Driver: PDF2000.pltcfg
Full: M:\EMCP\Mechanical\MEPS M-703.dgn

SYSTEM POINT LIST

SYSTEM POINT DESCRIPTION		ANALOG INPUT										ANALOG OUTPUT					BINARY INPUT						BINARY OUTPUT					SYSTEMS FEATURES – ALARMS									SYSTEMS FEATURES – PROGRAMS																	NOTES
AHU-1,AHU-2,AHU-3 & MISCELLANEOUS	GRAPHIC	TEMPERATURE	PRESSURE	RH	KW	GPM	CFM	PPM	PERCENT	PERCENT RLA		DDC	MODULATE	SETPOINT ADJ.	CURRENT SENSOR		STATUS HUMIDITY	STATUS ON/OFF	FILTER STATUS	STATUS OPEN/CLSD.	STATUS PRESSURE	STATUS TEMPERATURE	OFF/ON	OPEN/CLOSE	LOCK OUT	ENABLE/DISABLE		HIGH ANALOG	LOW ANALOG	BINARY	PROOF	SENSOR FAIL	FLOW FAIL	COMM. FAIL	DIAGNOSTICS	FIRE ALARM	TIME SCHEDULING	OPT. START/STOP	DEMAND LIMITING	RESET	EVENT PROGRAM	DDC	ALARM INSTRUCT	MAINT. WK. ORD.	RUN TIME	EXP. MESSAGE	SET BACK/SET UP	NIGHT PURGE	TENANT BILLING	CHILLER SEQUENCING	TOTALIZING	TIMED OVERRIDE	ECONOMIZER	
SUPPLY FAN	X													X				X					X																X	X					X		X											
OUTSIDE AIR	X	X				X																																																GLOBAL
MIXED AIR	X	X				X																						X	X														X													
SUPPLY AIR	X	X				X																						X	X														X													
FREEZESTAT	X																		X									X														X													
H.W. VALVE	X													X																																												
C.W. VALVE	X													X																																												
OUTSIDE AIR DAMPER	X													X					X																																				
DUCT STATIC PRESSURE	X		X																									X	X														X														TYP FOR 3
SMOKE DETECTOR	X																		X																							X													
FILTER	X		X																																								X														SEE NOTE 1
RELIEF DAMPER	X													X																																												
HIGH LIMIT	X																		X								X														X													
OA FLOW	X						X																						X	X														X													
CH-1 CHILLER	X																X					X							X			X													X													
CHW TEMPS	X	X												X								X						X	X			X											X													
CHWP-1, 2	X					X									X			X					X			X				X													X													
CHWP 3-WAY VALVE	X													X																					X			X																			
B-1,2,3 BOILERS	X																X					X							X													X													
HW TEMPS	X	X												X														X	X			X											X													
HWP-1, 2	X					X									X			X					X			X				X													X													
HWP 3-WAY VALVE	X													X																					X			X																			
PHWP-1, 2, 3	X					X									X			X					X			X				X													X													
DP SWITCH |X||X|																																																				

GENERAL NOTES:

1. DIFFERENTIAL PRESSURE SWITCH SHALL BE ADJUSTABLE TO MEASURE IN. WG. (CLEAN/DIRTY FILTER)

SYSTEM POINT LIST

SYSTEM POINT DESCRIPTION		ANALOG INPUT										ANALOG OUTPUT					BINARY INPUT						BINARY OUTPUT					SYSTEMS FEATURES – ALARMS									SYSTEMS FEATURES – PROGRAMS																	NOTES
SINGLE DUCT VAV TERMINALS VAV 1-1 THRU 1-16 VAV 2-1 THRU 2-17 VAV 3-1 THRU 3-15	GRAPHIC	TEMPERATURE	PRESSURE	RH	KW	GPM	CFM	PPM	PERCENT	PERCENT RLA		DDC		SETPOINT ADJ.			PNEU. TRANSDUCER	STATUS ON/OFF	FILTER STATUS	STATUS OPEN/CLSD.	STATUS PRESSURE		OFF/ON	OPEN/CLOSE	LOCK OUT	ENABLE/DISABLE		HIGH ANALOG	LOW ANALOG	BINARY	PROOF	SENSOR FAIL	FLOW FAIL	COMM. FAIL	DIAGNOSTICS		TIME SCHEDULING	OPT. START/STOP	DEMAND LIMITING	RESET	EVENT PROGRAM	DDC	ALARM INSTRUCT	MAINT. WK. ORD.	RUN TIME	EXP. MESSAGE	SET BACK/SET UP	NIGHT PURGE	TENANT BILLING	CHILLER SEQUENCING	TOTALIZING	TIMED OVERRIDE		
ROOM AIR	X	X	X			X																					X	X				X												X									
3-WAY VALVE	X										X																						X			X																			
P.A. FLOW	X						X																											X																							
P.A. DAMPER	X												X																																													
FAN																						X																																	
ZONE SETPOINT |X|X|																																																					

GENERAL NOTES:

SYSTEM POINT LIST

SYSTEM POINT DESCRIPTION		ANALOG INPUT												ANALOG OUTPUT					BINARY INPUT						BINARY OUTPUT					SYSTEMS FEATURES – ALARMS									SYSTEMS FEATURES – PROGRAMS																	NOTES
EXHAUST FANS & MISC	GRAPHIC	TEMPERATURE	PRESSURE	RH	SPEED SETTING KW	GPM	CFM	PPM	PERCENT	PERCENT RLA	DIFFERENTIAL	KW DEMAND	KWH USAGE	CURRENT SENSOR	DDC	SETPOINT ADJ.			PNEU. TRANSDUCER	STATUS ON/OFF	FILTER STATUS	STATUS OPEN/CLSD.	STATUS PRESSURE	STATUS TEMPERATURE	OFF/ON	OPEN/CLOSE	LOCK OUT	ENABLE/DISABLE		HIGH ANALOG	LOW ANALOG	BINARY	PROOF	SENSOR FAIL	FLOW FAIL	COMM. FAIL	DIAGNOSTICS	FIRE ALARM	TIME SCHEDULING	OPT. START/STOP	DEMAND LIMITING	RESET	EVENT PROGRAM	DDC	ALARM INSTRUCT	MAINT. WK. ORD.	RUN TIME	EXP. MESSAGE	SET BACK/SET UP	NIGHT PURGE	TENANT BILLING	CHILLER SEQUENCING	TOTALIZING	TIMED OVERRIDE	ECONOMIZER	
EF-1,3,4	X						X																			X										X																						
OA DAMPER - EF-1,3,4	X																				X					X																														
FIRE ALARM	X																				X																																				

GENERAL NOTES:

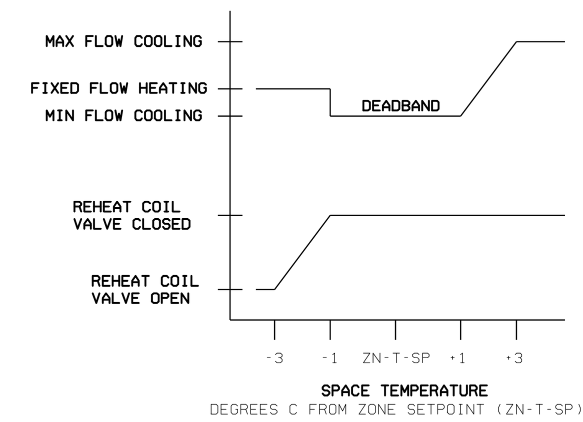

VAV BOX WITH REHEAT
OCCUPIED MODE SEQUENCING

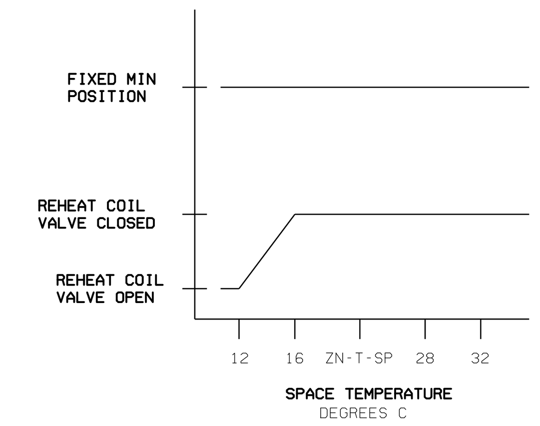

VAV BOX WITH REHEAT
UNOCCUPIED MODE SEQUENCING

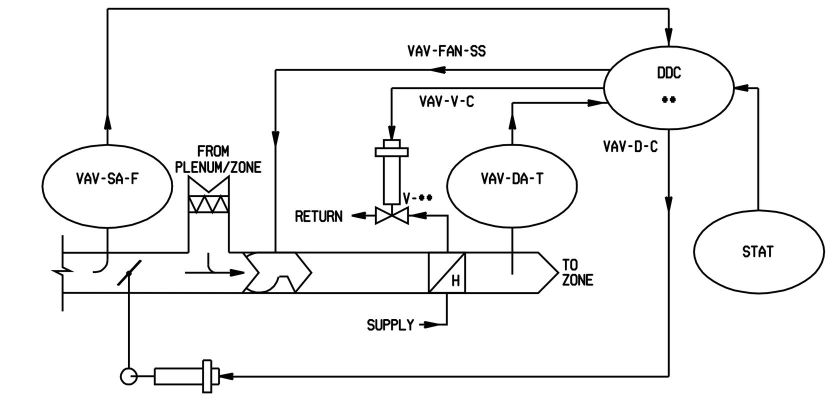

VAV BOX WITH SERIES FAN

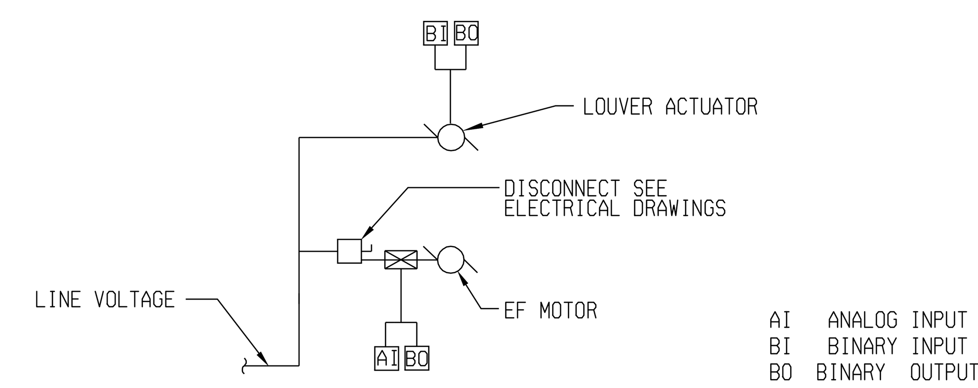

EXHAUST FAN CONTROL SCHEMATIC (EF-1,3,4)

NTS

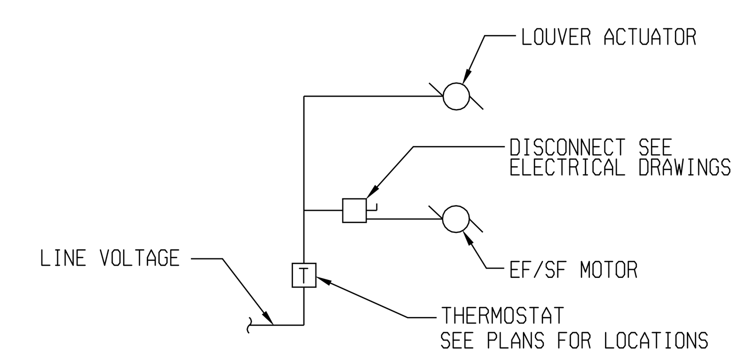

EXHAUST/SUPPLY FAN CONTROL (NON-DDC)
SCHEMATIC (EF-2,SF-1)

NTS

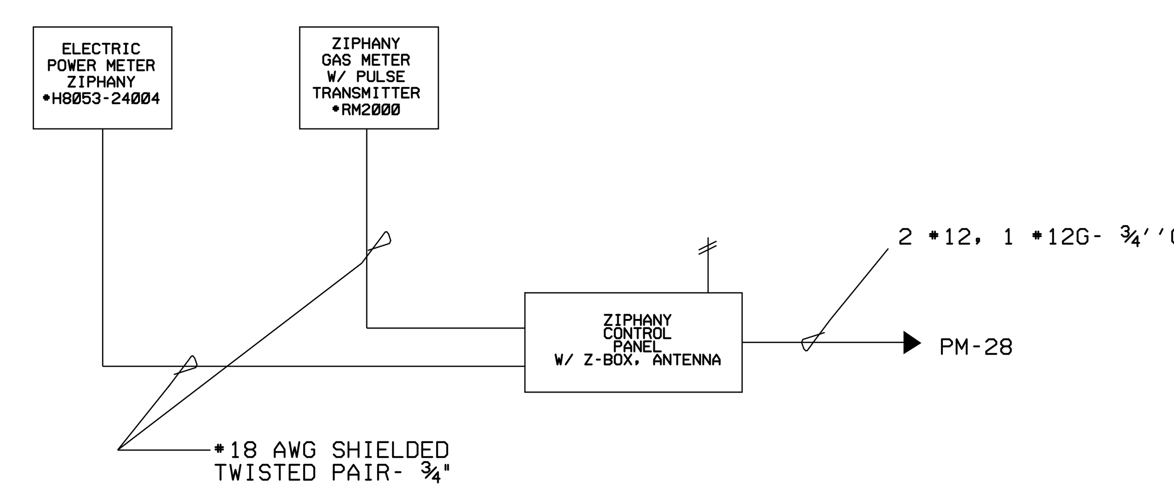

SEE NOTE #2 ON DRAWING M-101.

GAS & ELECTRIC METERING
BLOCK DIAGRAM

NTS

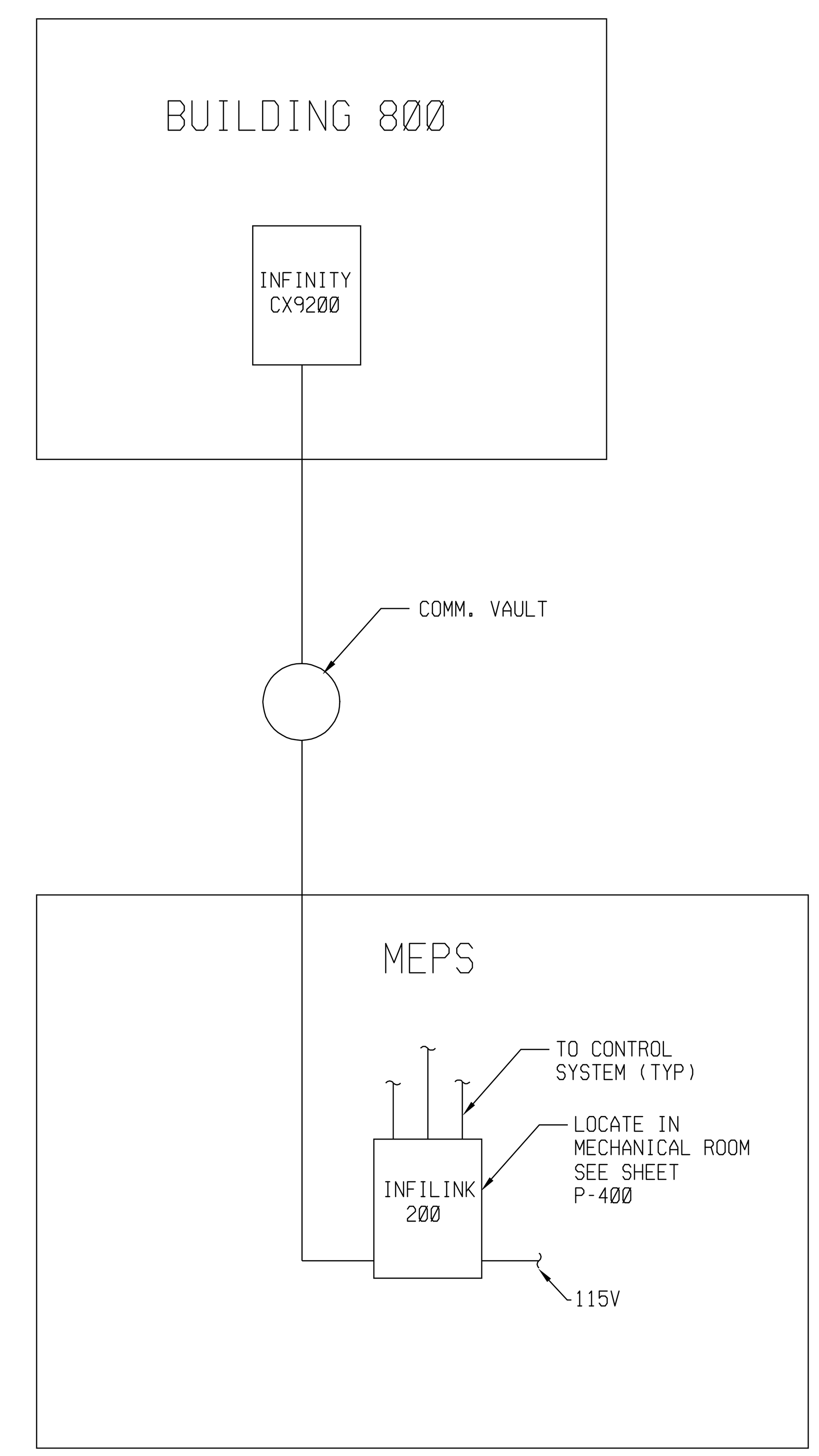

SEE NOTE #2 ON DRAWING M-705 AND COMMUNICATION NOTE #14 ON DRAWING E-01.

DDC CONTROL PANEL

NO SCALE

US Army Corps of Engineers
New York District

Symbol | Description | Date | Appr.

Designed by:	Date:	Size:	Rev.:
Dwn by: / Ckd by:	Drawing file no.:		
Reviewed by:	Drawing code:		
Submitted by:	Plot date: 19-NOV-2004 15:55 Plot by: e3jetmwe Scale: 50.000000:1.000000		

U.S. ARMY ENGINEER DISTRICT
CORPS OF ENGINEERS
NEW YORK, NEW YORK

File name: S:\fileroom\military\Niagara Fall AFB\MEPS\Mechanical\MEPS M-704.dgn

PN 59873
MILITARY ENTRANCE PROCESSING STATION (MEPS)
NIAGARA FALLS, NY

MISCELLANEOUS CONTROLS DETAILS

Sheet reference number:
M-704

Submitted by: e3jetmwe Plot Date: 19-NOV-2004 15:55
S:øfileroomømilitaryøNiagara Fall AFBøMEPSøMechanicaløMEPS M-704.dgn

SEQUENCE OF OPERATION

GENERAL REQUIREMENTS - HVAC SYSTEMS

THESE REQUIREMENTS SHALL APPLY TO ALL PRIMARY HVAC SYSTEMS UNLESS MODIFIED HEREIN. THE SEQUENCES DESCRIBE THE ACTIONS OF THE CONTROL SYSTEM FOR ONE DIRECTION OF CHANGE IN THE HVAC PROCESS ANALOG VARIABLE, SUCH AS TEMPERATURE, HUMIDITY OR PRESSURE. THE REVERSE SEQUENCE SHALL OCCUR WHEN THE DIRECTION OF CHANGE IS REVERSED.

SUPPLY FAN OPERATING

HVAC SYSTEM OUTSIDE AIR AND RETURN AIR DAMPERS SHALL FUNCTION AS DESCRIBED FOR SPECIFIC MODES OF OPERATION UNLESS CONTROL OF THE DAMPERS IS ASSUMED BY THE FIRE AND SMOKE CONTROL SYSTEM. INTERLOCKED EXHAUST FANS SHALL BE STOPPED IN THE UNOCCUPIED AND VENTILATION DELAY MODES AND THEIR DAMPERS SHALL BE CLOSED. INTERLOCKED EXHAUST FANS SHALL RUN IN THE OCCUPIED MODE AND THEIR DAMPERS SHALL OPEN. COOLING COIL CONTROL VALVES AND COOLING COIL CIRCULATING PUMPS SHALL FUNCTION AS DESCRIBED FOR THE SPECIFIC MODES OF OPERATION UNLESS THEIR CONTROL IS ASSUMED BY THE FREEZE PROTECTION SYSTEM. HEATING COIL VALVES SHALL BE UNDER CONTROL.

SUPPLY FAN NOT OPERATING

WHEN AN HVAC SYSTEM IS STOPPED, ALL INTERLOCKED FANS SHALL STOP, THE OUTSIDE AIR AND RETURN AIR DAMPERS SHALL CLOSE, THE SYSTEM SHALL PUMP DOWN IF IT HAS A PUMP DOWN CYCLE AND THE COOLING COIL VALVES FOR COILS LOCATED INDOORS SHALL CLOSE TO THE COIL. HEATING COIL VALVES SHALL REMAIN UNDER CONTROL.

OCCUPIED, UNOCCUPIED, AND VENTILATION-DELAY MODES OF OPERATION

THE DDC SYSTEM SHALL PERFORM TIMECLOCK FUNCTIONS TO PROVIDE THE FOLLOWING MODES OF OPERATION: OCCUPIED, UNOCCUPIED, AND VENTILATION-DELAY. VENTILATION-DELAY MODE TIMING SHALL START PRIOR TO THE OCCUPIED MODE TIMING. WHEN OPERATING IN THE VENTILATION-DELAY MODE, THE DDC SYSTEM SHALL PREVENT THE OUTSIDE-AIR DAMPERS FROM OPENING. AT THE TIME SHOWN, THE DDC SYSTEM SHALL PLACE THE SYSTEM IN THE OCCUPIED MODE. AT THE EXPIRATION OF THE VENTILATION-DELAY MODE TIMING PERIOD, THE DDC SYSTEM SHALL ALLOW THE OUTSIDE-AIR DAMPER TO OPEN. AT THE TIME SHOWN. THE DDC SYSTEM SHALL PLACE THE CONTROL SYSTEM IN THE UNOCCUPIED MODE.

OUTSIDE AIR AND RETURN AIR

OCCUPIED MODE - THE OUTSIDE-AIR AND RETURN-AIR DAMPERS SHALL BE UNDER MIXED AIR TEMPERATURE CONTROL. THE OUTSIDE AIR DAMPER SHALL BE MODULATED TO MAINTAIN THE REQUIRED OUTSIDE AIR FLOW.

UNOCCUPIED MODE - THE DAMPERS SHALL RETURN TO THEIR NORMAL POSITIONS.

VENTILATION-DELAY MODE - THE DAMPERS SHALL RETURN TO THEIR NORMAL POSITIONS.

SUPPLY FAN CONTROL

OCCUPIED MODES - SUPPLY FAN SHALL START, AND SHALL OPERATE CONTINUOUSLY.

UNOCCUPIED MODE - THE SUPPLY FAN SHALL BE OFF.

VENTILATION-DELAY MODE (MORNING WARM-UP MODE) - PRIOR TO BUILDING OCCUPATION, THE AIR HANDLING UNIT SHALL SWITCH TO THE MORNING WARM-UP MODE. THE OUTSIDE AIR DAMPER SHALL REMAIN CLOSED AND THE RETURN AIR DAMPER SHALL BE OPENED. SUPPLY FAN SHALL START AND OPERATE CONTINUOUSLY, THE CONTROL VALVE AT THE HEATING COIL SHALL MODULATE TO MAINTAIN THE MAXIMUM DISCHARGE TEMPERATURE SETPOINT AND THE CONTROL VALVE AT THE COOLING COIL SHALL BE CLOSED TO THE COIL. THE AIR HANDLING UNIT SHALL SIGNAL ALL VAV BOXES TO FULL FLOW UNTIL MORNING WARM-UP SETPOINT IS REACHED AND THE AIR HANDLING UNIT SWITCHES TO THE OCCUPIED MODE.

VENTILATION-DELAY MODE (MORNING PRE-COOLING MODE) - PRIOR TO BUILDING OCCUPATION, THE AIR HANDLING UNIT SHALL SWITCH TO THE MORNING PRE-COOLING MODE. THE OUTSIDE AIR DAMPER SHALL REMAIN CLOSED AND THE RETURN AIR DAMPER SHALL BE OPENED. SUPPLY FAN SHALL START AND OPERATE CONTINUOUSLY, THE CONTROL VALVE AT THE COOLING COIL SHALL MODULATE TO MAINTAIN THE MAXIMUM DISCHARGE TEMPERATURE SETPOINT. THE AIR HANDLING UNIT SHALL SIGNAL ALL VAV BOXES TO FULL FLOW UNTIL MORNING WARM-UP SETPOINT IS REACHED AND THE AIR HANDLING UNIT SWITCHES TO THE OCCUPIED MODE.

SUPPLY-DUCT PRESSURIZATION CONTROL

THE SUPPLY FAN WILL START AND GRADUALLY RAMP UP TO SPEED (SOFT START) INITIAL SETPOINT OF 30 HZ (ADJUSTABLE). THE SUPPLY FAN VARIABLE SPEED DRIVE SHALL BE INCREASED/DECREASED BASED UPON THE DOWN STREAM SUPPLY DUCT STATIC PRESSURE SETPOINT. A HIGH-LIMIT STATIC PRESSURE SWITCH IN THE FAN DISCHARGE SHALL STOP THE FAN AND INITIATE A HIGH STATIC ALARM WHEN THE STATIC PRESSURE EXCEEDS THE ALARM SETPOINT.

FILTER

A DIFFERENTIAL PRESSURE SWITCH ACROSS THE FILTER SHALL INITIATE A FILTER ALARM WHEN THE PRESSURE DROP ACROSS THE FILTER REACHES THE SETPOINT AS SHOWN (ADJUSTABLE).

FREEZE PROTECTION

ALL MODES - A FREEZESTAT, LOCATED AS SHOWN, SHALL STOP THE SUPPLY FAN, CAUSE THE DAMPERS TO RETURN TO THEIR NORMAL POSITION, AND SHALL INITIATE A LOW TEMPERATURE ALARM IF THE TEMPERATURE DROPS BELOW THE FREEZESTAT'S SETPOINT. RETURN TO THE NORMAL MODE OF OPERATION SHALL REQUIRE MANUAL RESET AT THE FREEZESTAT. THE DDC PANEL SHALL MONITOR THE FREEZESTAT THROUGH AUXILIARY CONTACTS AND SHALL INDICATE AN ALARM CONDITION WHEN THE FREEZESTAT TRIPS.

COOLING COIL

OCCUPIED AND VENTILATION-DELAY MODES - THE CONTROL VALVE SHALL BE MODULATED BY THE DDC SYSTEM FROM THE SIGNAL OF A TEMPERATURE SENSING ELEMENT AND TRANSMITTER LOCATED IN THE COIL DISCHARGE AIR TO MAINTAIN THE SETPOINT (15.6 DEGREES C, ADJUSTABLE).

UNOCCUPIED MODE - THE DDC SYSTEM SHALL CLOSE THE COOLING COIL CONTROL VALVE.

HEATING COIL

OCCUPIED AND VENTILATION-DELAY MODES - THE CONTROL VALVE SHALL BE MODULATED BY THE DDC SYSTEM FROM THE SIGNAL OF A TEMPERATURE SENSING ELEMENT AND TRANSMITTER LOCATED IN THE COIL DISCHARGE AIR TO MAINTAIN THE SETPOINT (15.6 DEGREES C, ADJUSTABLE). THE HEATING VALVE WILL BE CLOSED IF THE OUTSIDE AIR DAMPER IS OPEN PAST ITS MINIMUM POSITION OR IF THE COOLING VALVE IS OPEN. THE HEATING VALVE WILL BE CLOSED IF THE SUPPLY FAN IS OFF.

HOT WATER BOILERS

THE DDC SYSTEM SHALL ACCEPT A SIGNAL FROM A SUNSHIELDED OUTSIDE AIR TEMPERATURE SENSING ELEMENT AND TRANSMITTER. THE DDC SYSTEM SHALL START AND STOP DISTRIBUTION PUMP (HWP-1,2), BOILER PUMP (PHWP-1,2,3), AND THE BOILERS (B-1,2,3) AT THE OUTSIDE AIR TEMPERATURE SHOWN. THE DDC SYSTEM SHALL ACCEPT A SIGNAL FROM A TEMPERATURE SENSING ELEMENT AND TRANSMITTER LOCATED IN THE HEATING SUPPLY LINE AND THE DDC SYSTEM OUTPUT SHALL MODULATE THE HYDRONIC HEATING SYSTEM CONTROL VALVE TO MAINTAIN THE RESET SCHEDULE SETPOINT IN THE HYDRONIC HEATING SUPPLY LINE.

EACH BOILER SHALL ONLY START AND STOP ON DEMAND SEQUENTIALLY AND WHEN TEMPERATURE CAN BE MAINTAINED WITH FEWER BOILERS, THEN ONE OR MORE BOILERS WILL CYCLE "OFF".

CHILLER

THE DDC SYSTEM SHALL ENABLE TO START AND SHALL START THE CHILLED WATER PUMP (CHWP-1,2). AFTER AN INTERNAL DIAGNOSTIC CHECK AND AFTER FLOW IS PROVEN THROUGH THE EVAPORATOR, THE AIR COOLED CHILLER SHALL RAMP THE CHILLER CAPACITY TO MAINTAIN THE LEAVING CHILLED WATER TEMPERATURE SETPOINT. THE DDC SYSTEM SHALL BE CONNECTED TO THE CHILLER CONTROL TO ALLOW RESET OF THE LEAVING CHILLED WATER TEMPERATURESETPOINT. THE DDC SYSTEM SHALL MONITOR THE CHILLED WATER SUPPLY AND AND RETURN TEMEPRATURES AND THE CHILLED WATER PUMP STATUS.

VAV BOX

ALL MODES - THE CONTROL DAMPER OF THE VAV BOX SHALL MODULATE IN RESPONSE TO THE SIGNAL FROM A FLOW SENSING ELEMENT AT THE DISCHARGE OR INLET OF THE VAV BOX TO A MICROPROCESSOR-BASED VAV-BOX VELOCITY CONTROLLER. THE VELOCITY CONTROLLER SHALL CONTROL THE BOX DAMPER FROM THE MINIMUM-FLOW POSITION TO THE FULL-FLOW POSITION FROM THE SIGNAL OF A SPACE TEMPERATURE SENSING ELEMENT LOCATED AS SHOWN. WHEN THE SPACE TEMPERATURE DECREASES, THE DAMPER SHALL GRADUALLY CLOSE TO THE MINIMUM FLOW POSITION TO MAINTAIN THE COOLING SETPOINT. WHEN THE SPACE TEMPERATURE CALLS FOR HEATING AFTER THE MINIMUM FLOW POSITION IS REACHED, CONTROL SHALL THEN PASS THROUGH A TEMPERATURE DEAD BAND. WHEN THE SPACE TEMPERATURE HAS DROPPED THROUGH THE DEAD BAND, THE REHEAT COIL SHALL BE GRADUALLY CONTROLLED TO MAINTAIN THE HEATING SETPOINT.

SMOKE CONTROL

ALL MODES - SMOKE DETECTORS IN THE SUPPLY-AIR AND RETURN-AIR DUCTWORK SHALL STOP THE SUPPLY FAN AND INITIATE A SMOKE ALARM IF SMOKE IS DETECTED AT EITHER LOCATION. RESTARTING THE SUPPLY FAN SHALL REQUIRE MANUAL RESET AT THE SMOKE DETECTOR.

RADIANT HEAT (OPTION)

THE RADIANT FLOOR HEAT HOT WATER SUPPLY TEMPERATURE SHALL BE RESET BASED ON THE SLAB TEMPERATURE SENSOR. THE HOT WATER SUPPLY TEMPERATURE SHALL HAVE A MINIMUM SETPOINT OF 26.7 DEGREES C AND A MAXIMUM SETPOINT OF 60 DEGREES C BASED ON A SLAB TEMPERATURE OF 23.9 DEGREES C AND 21.1 DEGREES C. THE SLAB TEMPERATURE SHALL BE SET AT 23.9 DEGREES C (ADJUSTABLE). THE RADIANT HEAT SHALL BE ENABLED WHENEVER THE OUTSIDE AIR TEMPERATURE IS LESS THAN 10 DEGREES C (ADJUSTABLE).

NOTES

1. THE DDC SHALL BE A COMPLETE SYSTEM COMPATIBLE WITH THE EXISTING BASE-WIDE ANDOVER CONTROL SYSTEM AND SUITABLE FOR THE CONTROL OF THE HVAC AND OTHER BUILDING-LEVEL SYSTEMS AS SPECIFIED AND SHOWN AND SHALL BE CONTROLLED FROM THE UPGRADED WORKSTATIONS IN BUILDINGS 403 AND 426. NEW WORKSTATIONS ARE AN OPTION.
2. ALL CONTROL WIRING WITHIN THE MEPS FACILITY SHALL BE PROVIDED BY THE TEMPERATURE CONTROLS CONTRACTOR. SEE COMMUNICATION NOTE #14 ON DRAWING E-01. CONTROLS CONTRACTOR SHALL BE RESPONSIBLE FOR THE FINAL TESTING AND CERTIFICATION.
3. VALVE KV SHALL BE CALCULATED BY CONTROL'S CONTRACTOR.
4. FIRE PROTECTION DURING CONSTRUCTION MUST ADHERE TO NFPA 241, SAFEGUARDING CONSTRUCTION, ALTERATION AND DEMOLITIONS OPERATIONS.
5. MECHANICAL ROOM 139 SHALL BE PROVIDED WITH ROOM TEMPERATURE SENSOR. SENSOR SHALL BE CONNECTED TO CONTROL PANEL AND BE CAPABLE OF SENDING A LOW LIMIT TROUBLE ALARM CONDITION (OPERATOR ADJUSTABLE, LATCHING). ALARM SHALL SIMULTANEOUSLY SIGNAL REMOTE CENTRAL STATION OPERATOR (BUILDINGS 403 AND 426). ROOM ALARM SETPOINT AT 7.2 DEGREES C. FOR LOCATION, SEE DRAWING M-100.
6. FOR THERMOSTATS , MOTORIZED DAMPER INTERLOCKING, EMERGENCY SHUTOFF SWITCH, ETC. SEE DRAWING M-100.
7. FREEZESTATS SHALL BE FACTORY INSTALLED.
8. FOR EXHAUST FAN INTERLOCKING, SEE EXHAUST FAN SCHEDULE ON DRAWING M-601.
9. DUCT STATIC PRESSURE SENSING ELEMENT SHALL BE LOCATED UPSTREAM OF THE LAST VAV BOX ON THE SUPPLY DUCT.

US Army Corps of Engineers
New York District

U.S. ARMY ENGINEER DISTRICT
CORPS OF ENGINEERS
NEW YORK, NEW YORK

Designed by: | Dwn by: | Ckd by: | Reviewed by: | Submitted by:
Date: | Size: | Rev.: | Drawing file no.: | Drawing code:
Plot date: 19-NOV-2004 15:55
Plot by: e3jetmwe
Scale: 50.000000:1.000000
File name: S:\fileroom\military\Niagara Fall AFB\MEPS\Mechanical\MEPS M-705.dgn

PN 59873
MILITARY ENTRANCE PROCESSING STATION (MEPS)
NIAGARA FALLS, NY

SEQUENCE OF OPERATIONS AND NOTES

Sheet reference number:
M-705

LEGEND

- SANITARY SEWER OR WASTE PIPE (WP)
- SANITARY VENT PIPE (VP)
- DOMESTIC COLD WATER (DCW)
- DOMESTIC HOT WATER (DHW)
- DOMESTIC HOT WATER RECIRCULATING (DHWR)
- PIPE CAP
- FP — FIRE PROTECTION
- G — GAS PIPING
- DIRECTION OF SLOPE DOWN
- DIRECTION OF FLOW
- GATE VALVE (HORIZONTAL & VERTICAL)
- GAS SHUT-OFF COCK
- FLOOR CLEAN OUT WITH DECK PLATE (FCOD)
- CHECK VALVE
- BALANCING VALVE
- BACKFLOW PREVENTER
- TEMPERATURE AND PRESSURE RELIEF VALVE
- UNION
- INTERIOR HOSE BIBB (HB)
- EXTERIOR WALL HYDRANT (WH)
- FLOOR DRAIN (FD)
- WALL CLEANOUT (WCO)
- (PDI SIZE FIXTURE UNIT RATING AS INDICATED) SEE WATER HAMMER ARRESTER DETAIL ON THIS SHEET.
- VENT THRU ROOF (VTR)
- IN-LINE PUMP

ABBREVATIONS

AD	ACCESS DOOR
AFF	ABOVE FINISHED FLOOR
AFG	ABOVE FINISHED GRADE
APPROX	APPROXIMATELY
BFP	BACKFLOW PREVENTER
°C	DEGREES CELISUS
COMB.	COMBINATION
DCV	DOUBLE CHECK VALVE BACKFLOW PREVENTER
DCW	DOMESTIC COLD WATER
DHW	DOMESTIC HOT WATER
DHWH	DOMESTIC HOT WATER HEATER No. 1
DHWCP	DOMESTIC HOT WATER CIRCULATING PUMP
DN	DOWN
DWV	DRAIN, WASTE & VENT
EXH	EXHAUST
EWC	ELECTRIC WATER COOLER
FCOD	FLOOR CLEAN OUT WITH DECK PLATE
FD	FLOOR DRAIN
HB	HOSE BIB
HC	HANDICAP
HOA	HAND-OFF-AUTO
DHWR	HOT WATER RECIRCULATING
KW	KILOWATT
L	LITERS
L/S	LITERS PER SECOND
LPH	LITERS PER HOUR
MAX	MAXIMUM
MIN	MINIMUM, MINUTE
MM	MILLIMETERS
NIC	NOT IN CONTRACT
NOM	NOMINAL
NPT	NATIONAL PIPE THREAD
OD	OUTSIDE DIAMETER
P-1	PUMP No. 1
PDI	PLUMBING AND DRAINAGE INSTITUTE
PD	PRESSURE DROP
RPBFP	REDUCED PRESSURE BACKFLOW PREVENTER
RPS	REVOLUTIONS PER SECOND
S	SANITARY SEWER OR WASTE
TYP	TYPICAL
UG	UNDERGROUND
VP	VENT PIPE
VTR	VENT THRU ROOF
W	WATTS
WCO	WALL CLEAN OUT (WCO)
WH	WALL HYDRANT
WHA	WATER HAMMER ARRESTER
WPD	WATER PRESSURE DROP

GENERAL NOTES

1. ALL PLUMBING AND PLUMBING MATERIALS SHALL MEET THE REQUIREMENTS OF INTERNATIONAL PLUMBING CODE, LATEST EDITION.
2. SLOPES AND INVERT ELEVATIONS SHALL BE ESTABLISHED BEFORE ANY PIPING IS INSTALLED IN ORDER THAT PROPER SLOPES WILL BE MAINTAINED. ALL PIPING SHALL BE RUN TO AVOID CONFLICTS WITH OTHER TRADES.
3. COORDINATE WITH ARCHITECTURAL DRAWINGS BEFORE ROUGHING IN PLUMBING FIXTURES.
4. COORDINATE THE LOCATION OF ALL PIPING WITH LIGHTING FIXTURES, DUCTS, GRILLES, HEATING PIPING, ETC.
5. ALL PIPING SHALL BE CONCEALED IN WALLS OR ABOVE CEILINGS UNLESS OTHERWISE NOTED.

WATER HAMMER ARRESTER SCHEDULE

PDI UNITS	A	B	C	D	E	F
FIXTURE UNIT RATING	1-11	12-32	33-60	61-113	114-154	155-330

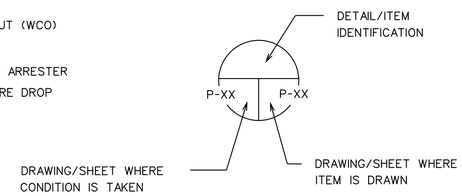

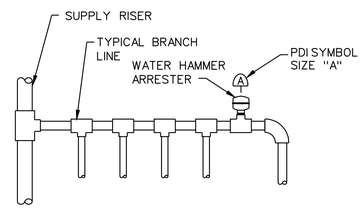

NOTES:

1. PREFERRED INSTALL WATER HAMMER ARRESTORS AT THE END OF BRANCH LINE BETWEEN THE LAST TWO FIXTURES SERVED.
2. SIZING AND INSTALLATION TO BE PER STANDARD PDI-WH-201.

WATER HAMMER ARRESTER INSTALLATION DETAIL

NO SCALE

DOMESTIC HOT WATER HEATER SCHEDULE

UNIT NO.	STORAGE (L)	RECOVERY (LPH)	(KW) INPUT PER HR	TEMP RISE °C	FUEL TYPE	REMARKS
DHWH-1	284	590	23	56	NATURAL GAS	—
DHWH-2	284	590	23	56	NATURAL GAS	—

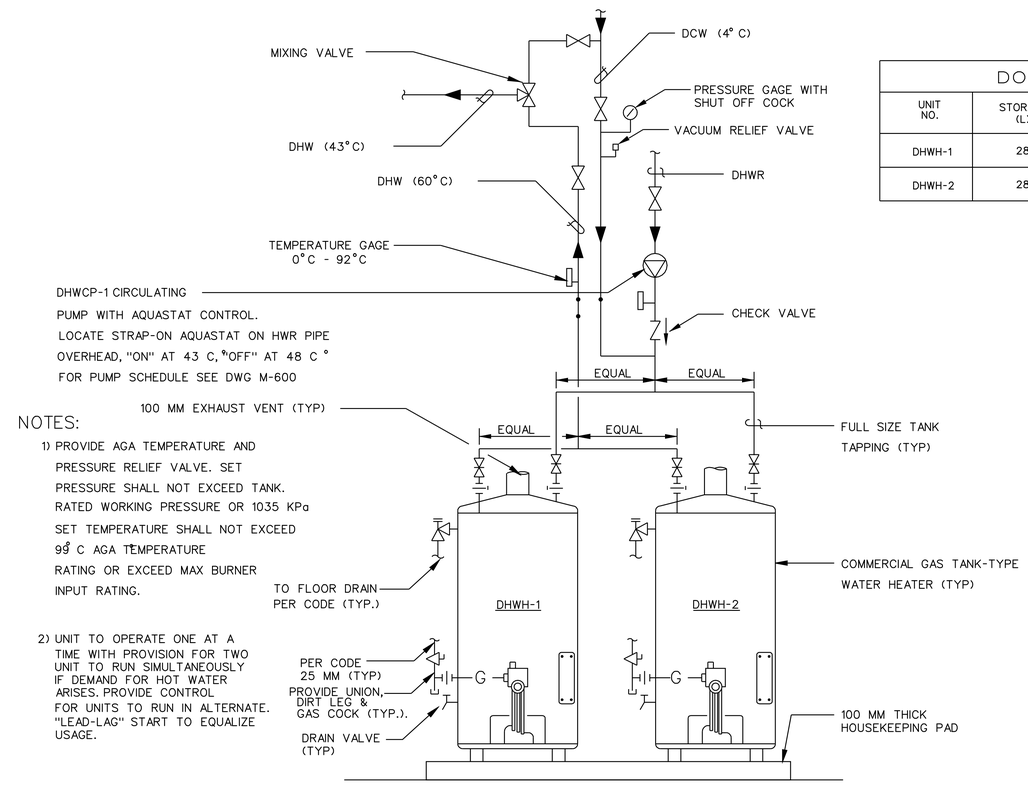

NOTES:

1) PROVIDE AGA TEMPERATURE AND PRESSURE RELIEF VALVE. SET PRESSURE SHALL NOT EXCEED TANK. RATED WORKING PRESSURE OR 1035 KPa SET TEMPERATURE SHALL NOT EXCEED 99° C AGA TEMPERATURE RATING OR EXCEED MAX BURNER INPUT RATING.

2) UNIT TO OPERATE ONE AT A TIME WITH PROVISION FOR TWO UNIT TO RUN SIMULTANEOUSLY IF DEMAND FOR HOT WATER ARISES. PROVIDE CONTROL FOR UNITS TO RUN IN ALTERNATE. "LEAD-LAG" START TO EQUALIZE USAGE.

WATER HEATER PIPING DIAGRAM

NTS

PLUMBING FIXTURE SCHEDULE

FIXTURE NO.	DESCRIPTION	CONNECTIONS MM				REMARKS
		WASTE	VENT	DCW	DHW	
P-1	WATER CLOSET	100	50	25	——	
P-2	WATER CLOSET, HAND.	100	50	25	——	
P-3	URINAL	50	50	20	——	
P-5	LAVATORY	40	40	10	10	
P-5A	LAVATORY (VANITY)	40	40	10	10	SEE NOTE 1
P-5B	LAVATORY (VANITY, HANDICAPPED)	40	40	15	15	SEE NOTE 1
P-7	KITCHEN SINK	50	40	15	15	
P-7A	KITCHEN SINK	50	40	15	15	SEE NOTE 4
P-8	SERVICE SINK	50	40	15	15	
P-10	LABORATORY SINK	40	40	15	15	
P-10A	LABORATORY SINK	40	40	15	15	TWO - BOWL SINK
P-13	SHOWER	50	40	15	15	PRE-FAB UNIT SEE NOTE 2
P-15	ELECTRIC WATER COOLER	40	40	15	——	
P-15A	ELECTRIC WATER COOLER, HC	40	40	15	——	HANDICAPPED
P-15/P-15A	ELECTRIC WATER COOLER	40/40	40	10	——	SEE NOTE 3
WH	WALL HYDRANT	——	——	15	——	

NOTES:

1. SEE ARCH. SPECS. AND DRAWINGS FOR COUNTERTOP DETAIL
2. SEE ARCH. SPECS.& DRAWING FOR SHOWER DESCRIPTION.
3. COMBINATION OF STANDARD AND HANDICAP SUPPLIED AS INTEGRAL UNIT SIMILAR TO OASIS MODEL M8CR CONFIGURATION.
4. PROVIDE FOODWASTE DISPOSER PER SPEC.

US Army Corps of Engineers
New York District

Symbol	Description	Date	Appr.
90% SUBMISSION		10/04/04	
95% SUBMISSION		03/02/04	
100% SUBMISSION		10/04/04	

U.S. ARMY ENGINEER DISTRICT
CORPS OF ENGINEERS
NEW YORK, NEW YORK

Designed by: | Date: | Size: | Rev.
Dwn by: | Ckd by: | Drawing file no.:
Reviewed by: | Drawing code:
Submitted by: | Plot date: 19-NOV-2004 15:55 | Plot by: ADMINWEB | Scale: 2.00000000000

File name: S:\Services\military\Niagara_Falls\FBI\Mechanical\M15_P-001.dgn

PN 59873
MILITARY ENTRANCE PROCESSING STATION (MEPS)
NIAGARA FALLS, NY

LEGEND, NOTES & DETAILS
PLUMBING

Sheet reference number:
P-001

Submitted by: e3jetmwe
Saf1fsr:admin1:sp1fldgsrv:Fall_AFBMEP:SAMAN:SAMEP3_P-001.dgn
Plot Date: 19-NOV-2004 15:55

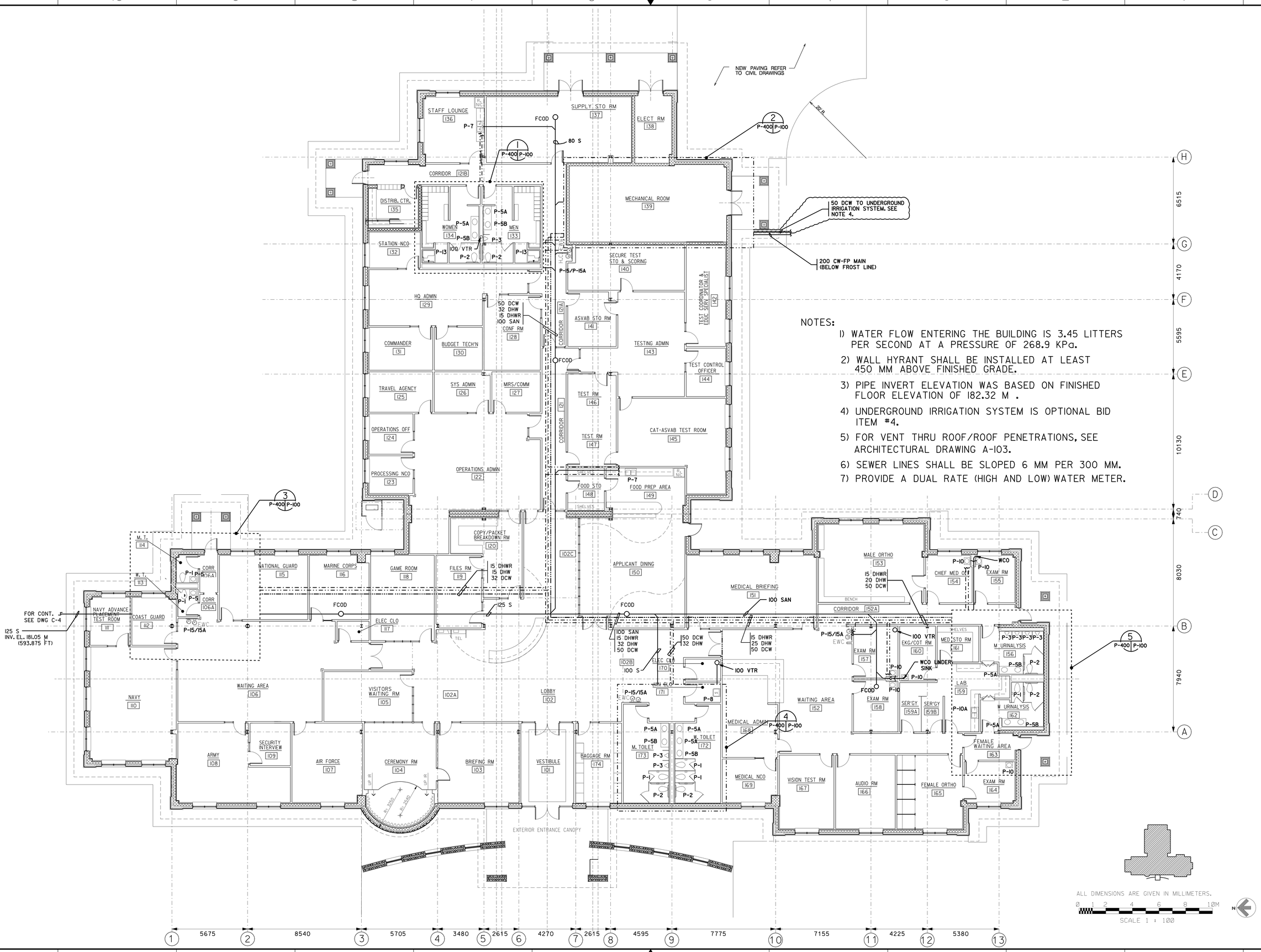

NOTES:

1) WATER FLOW ENTERING THE BUILDING IS 3.45 LITTERS PER SECOND AT A PRESSURE OF 268.9 KPa.
2) WALL HYRANT SHALL BE INSTALLED AT LEAST 450 MM ABOVE FINISHED GRADE.
3) PIPE INVERT ELEVATION WAS BASED ON FINISHED FLOOR ELEVATION OF 182.32 M .
4) UNDERGROUND IRRIGATION SYSTEM IS OPTIONAL BID ITEM #4.
5) FOR VENT THRU ROOF/ROOF PENETRATIONS, SEE ARCHITECTURAL DRAWING A-103.
6) SEWER LINES SHALL BE SLOPED 6 MM PER 300 MM.
7) PROVIDE A DUAL RATE (HIGH AND LOW) WATER METER.

US Army Corps of Engineers
New York District

Date	Description
10/04/04	80% SUBMISSION
08/09/04	65% SUBMISSION
05/30/04	35% SUBMISSION

U.S. ARMY ENGINEER DISTRICT
CORPS OF ENGINEERS
NEW YORK, NEW YORK

Designed by: | Date: | Size: | Rev:
Dwn by: | Ckd by: | Drawing file no.:
Reviewed by: | Drawing code:
Submitted by: | Plot date: 19-NOV-2004 15:05 | Plot by: eldbrown | Scale: 1:0000000000

File name: S:\Merryon\military\Niagara Falls\MEP\Mechanical\MEPB 1-100.dgn

PN 58973
MILITARY ENTRANCE PROCESSING STATION (MEPS)
NIAGARA FALLS, NY

FLOOR PLAN PLUMBING

Sheet reference number:
P-100

Submitted by: e3jehmwe
perform:submittingy#Nugent & Esh: MEBMEP:SAMEchnical:MEP 2-100.dgn
Plot Date: 19-NOV-2004 15:56

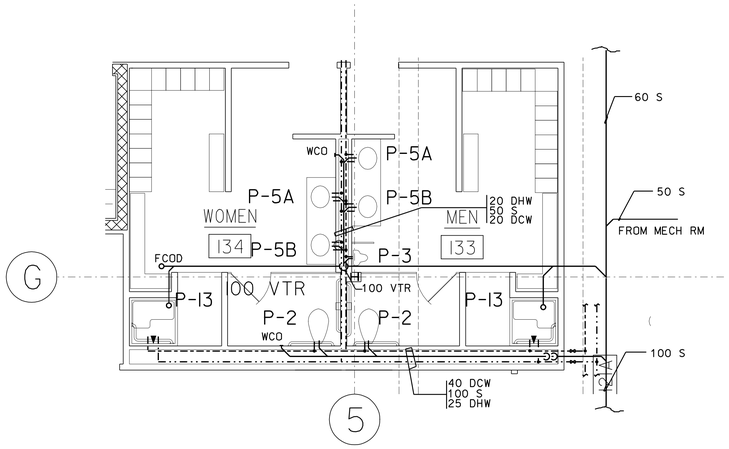

1 PLUMBING PART PLAN
P-100 P-400
SCALE: 1 : 50

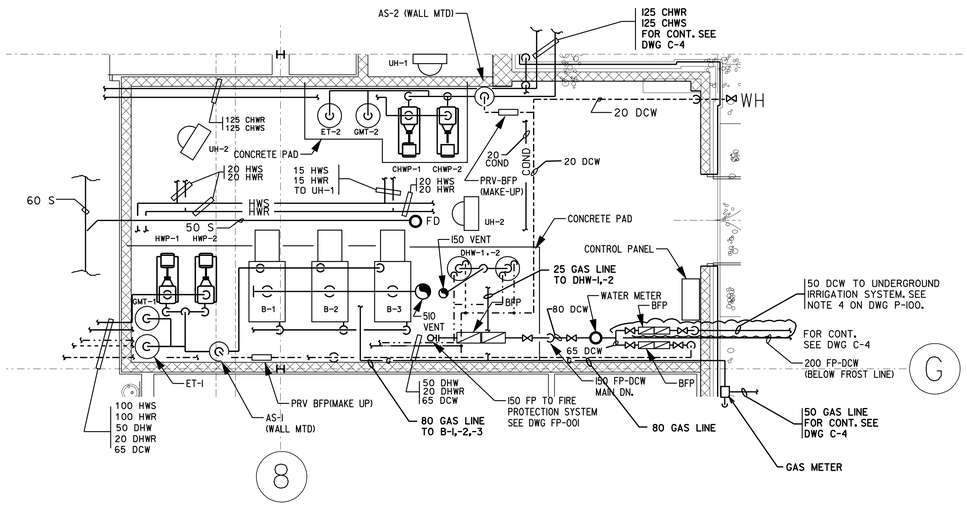

NOTE:

1. PROVIDE A DUAL RATE (HIGH AND LOW) WATER METER.

2 MECHANICAL ROOM 139 PART PLAN
P-100 P-400
SCALE: 1 : 50

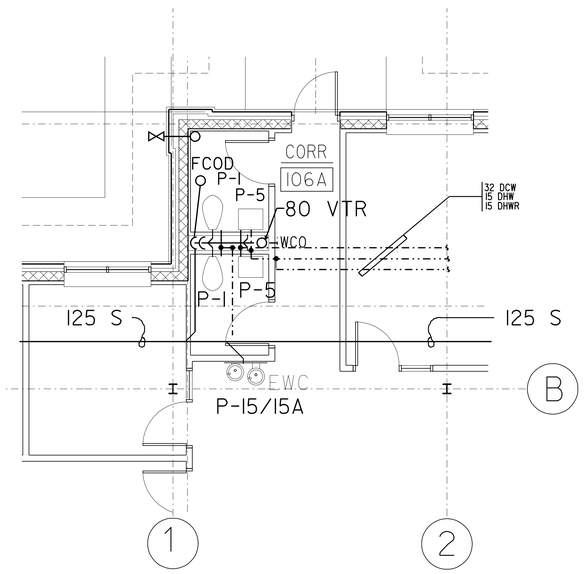

3 PLUMBING PART PLAN
P-100 P-400
SCALE: 1 : 50

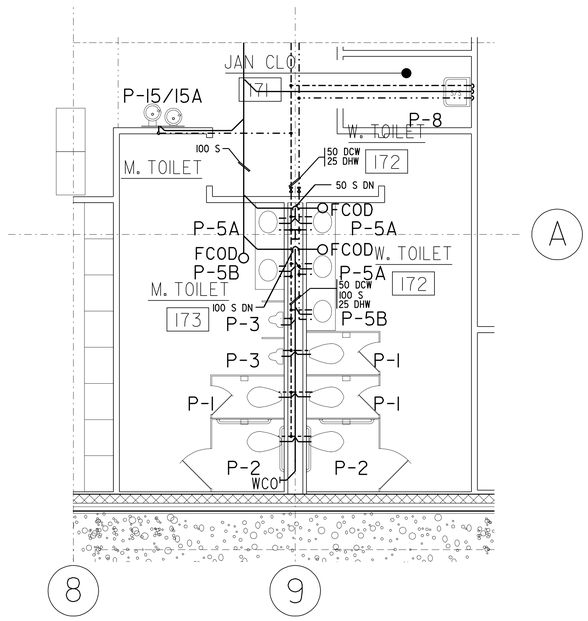

4 PLUMBING PART PLAN
P-100 P-400
SCALE: 1 : 50

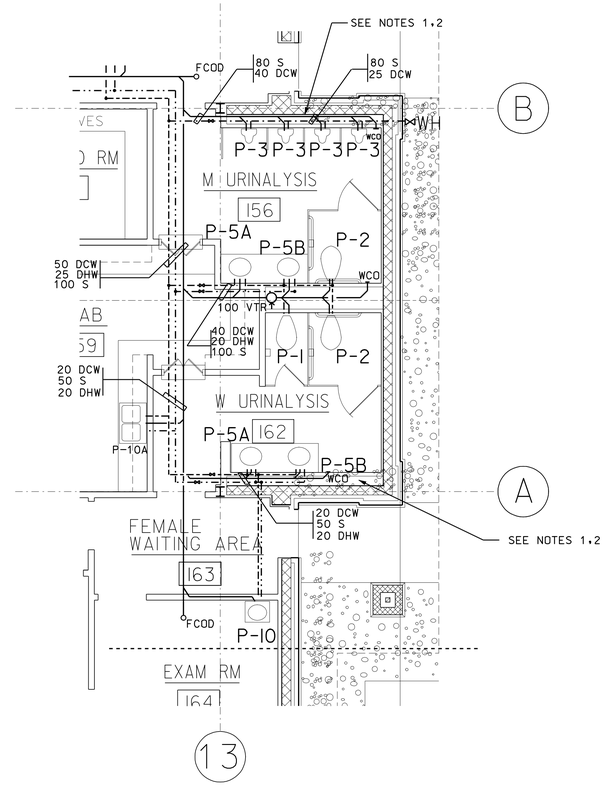

5 PLUMBING PART PLAN
P-100 P-400
SCALE: 1 : 50

NOTES:

1. PROVIDE HEAT TRACING FOR THE DOMESTIC COLD WATER AND DOMESTIC HOT WATER LINES.
2. FOR ELECTRICAL CHARACTERISTICS.SEE ELECTRICAL DRAWINGS.

US Army Corps of Engineers
New York District

Symbol	Description	Date	Appr.
	90% SUBMISSION	10/04/04	
	95% SUBMISSION	03/09/04	
	100% SUBMISSION	03/09/04	

U.S. ARMY ENGINEER DISTRICT
CORPS OF ENGINEERS
NEW YORK, NEW YORK

Designed by: | Date: | Size: | Rev.
Dwn by: | Ckd by: | Drawing file no.:
Reviewed by: | Drawing code:
Submitted by: | Plot date: 19-NOV-2004 15:57 | Plot by: ejetmewe | Scale: AS NOTED | Size: 120.000x90.000
File name: S:\Design\military\Images Fall 2003\MPS\Mechanical\MEPS A-400.dgn

MILITARY ENTRANCE PROCESSING STATION (MEPS)
PN 58873
NIAGARA FALLS, NY

PART PLAN

Sheet reference number:
P-400

Plot Date: 19-NOV-2004 15:57
Submitted by: ejetmewe
Settings:dwmilitar;psfilegara Fall AFBAMEPS\MechMod\MEPS A-400.dgn

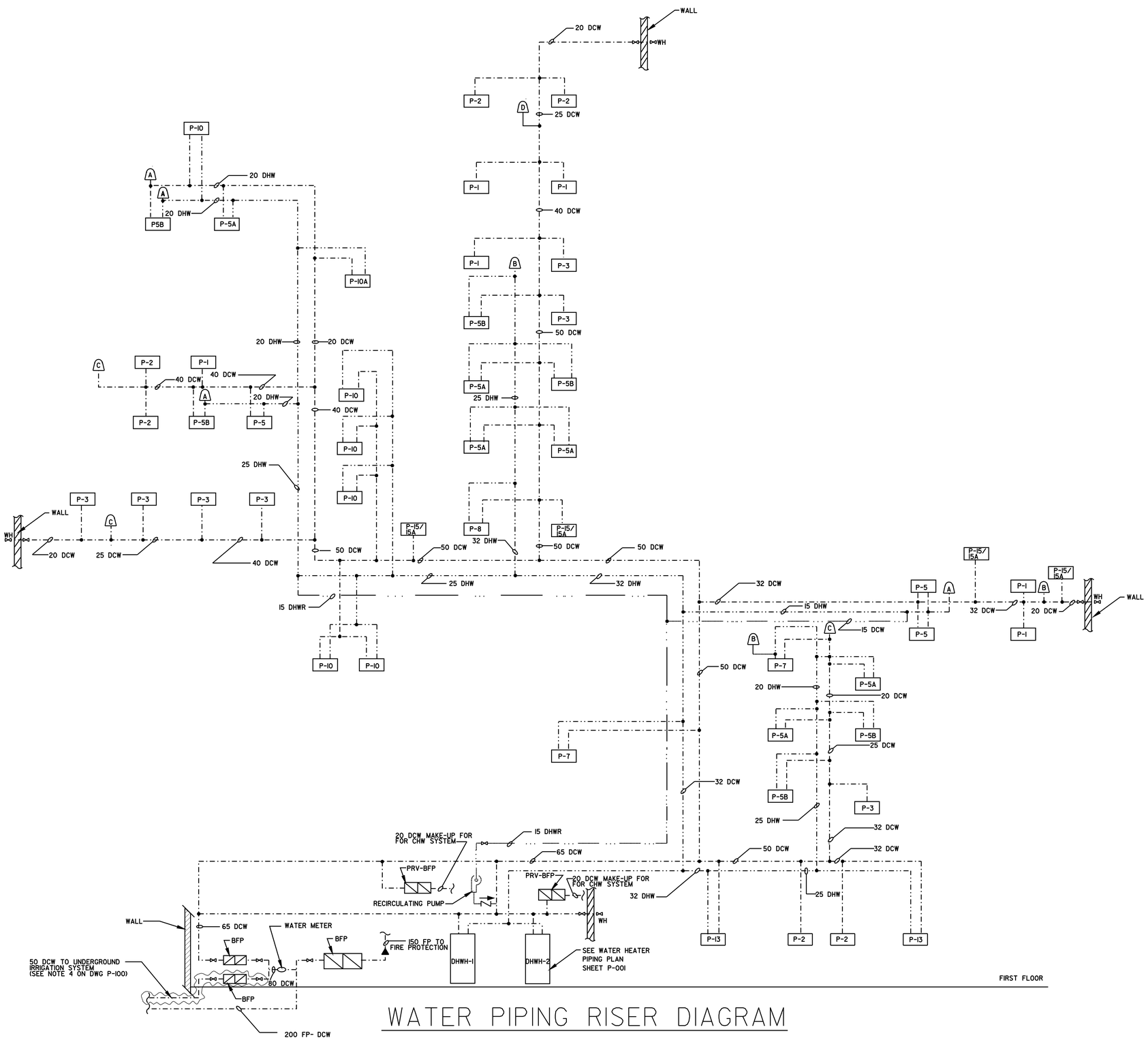

WATER PIPING RISER DIAGRAM

N. T. S.

US Army Corps of Engineers
New York District

Symbol	Description	Date	Appr.
	90% SUBMISSION	10/04/04	
	60% SUBMISSION	08/06/04	
	35% SUBMISSION	03/05/04	

U.S. ARMY ENGINEER DISTRICT
CORPS OF ENGINEERS
NEW YORK, NEW YORK

Designed by: | Date: | Size: | Rev:
Dwn by: | Ckd by: | Drawing file no.:
Reviewed by: | Drawing code:
Submitted by: | Plot date: 19-NOV-2004 15:57 | Plot by: w3jmmee | Site: 000000000000
File name: S:\Division\Military\Niagara Tail AFB\MEPS\Mechanical\MEPS P-600.dgn

PN 98673
MILITARY ENTRANCE PROCESSING STATION (MEPS)
NIAGARA FALLS, NY

WATER PIPING RISER DIAGRAMS

Sheet reference number:
P-600

Plot Dates: 19-NOV-2004 15:57
Submitted by: w3jmmee
pw:\\nyd-cadwin1\ldp-pw\Projects Full AF\98MEP\Mechanical\MEPS P-600.dgn

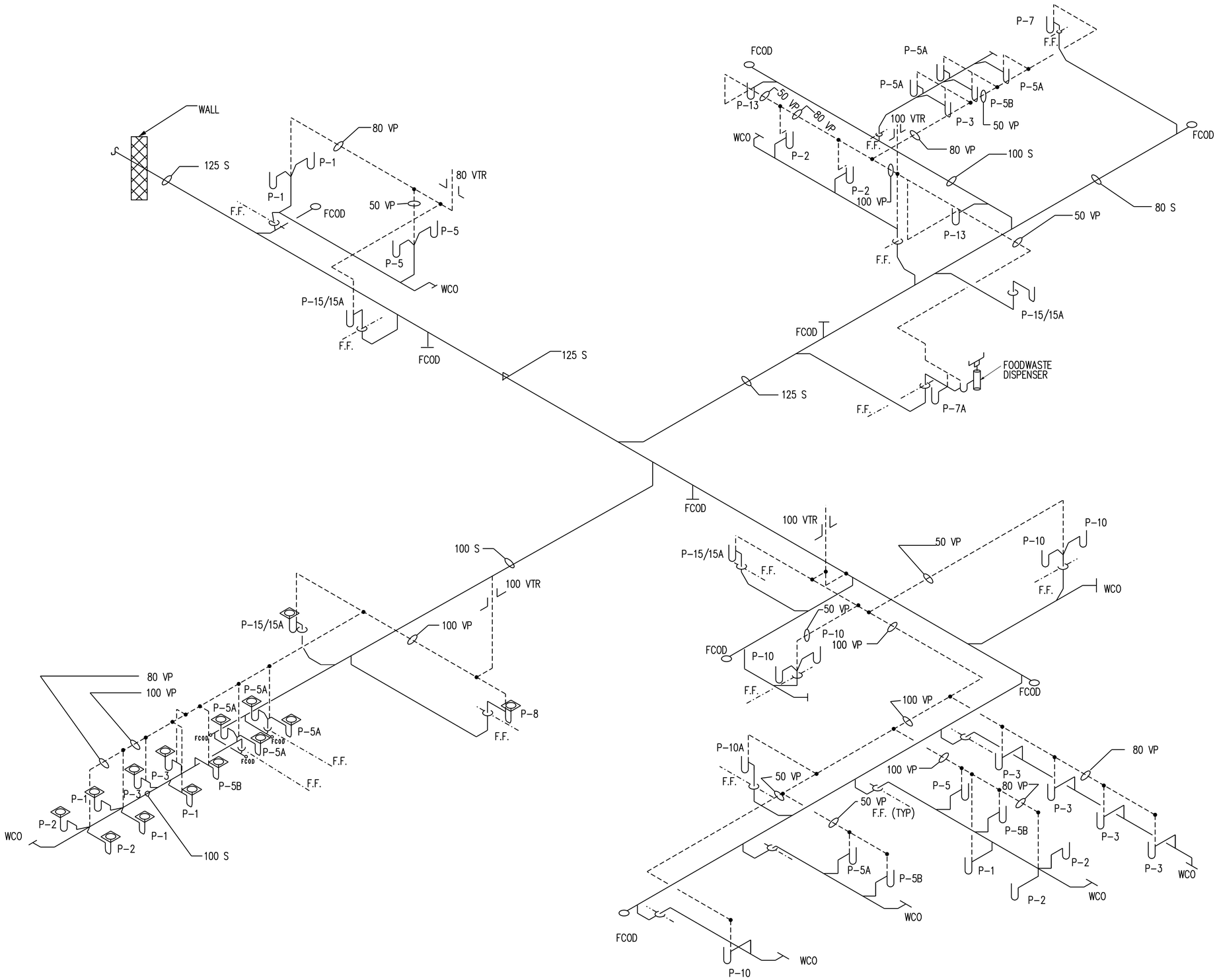

WASTE PIPING RISER DIAGRAMS

N T S

US Army Corps of Engineers
New York District

Symbol	Description	Date	Appr.
	90% SUBMISSION	10/04/04	
	30% SUBMISSION	06/01/04	
	15% SUBMISSION	03/05/04	

U.S. ARMY ENGINEER DISTRICT
CORPS OF ENGINEERS
NEW YORK, NEW YORK

Designed by: | Date: | Size: | Rev.
Dwn by: FWB | Ckd by: | Drawing file no.:
Reviewed by: | Drawing code:
Submitted by: | Plot date: 19-NOV-2004 15:57 | Plot by: e3jetmwe | Scale: 100.000000:1.000000

File name: S:\Mercom\military\Niagara Fall AFB\MEPS\Mechanical\MEPS P-601.dgn

PN 58673
MILITARY ENTRANCE PROCESSING STATION (MEPS)
NIAGARA FALLS, NY

WASTE PIPING RISER DIAGRAMS

Sheet reference number:
P-601

Submitted by: e3jetmwe Plot Date: 19-NOV-2004 15:57
S:\Mercom\military\Niagara Fall AFB\MEPS\Mechanical\MEPS P-601.dgn

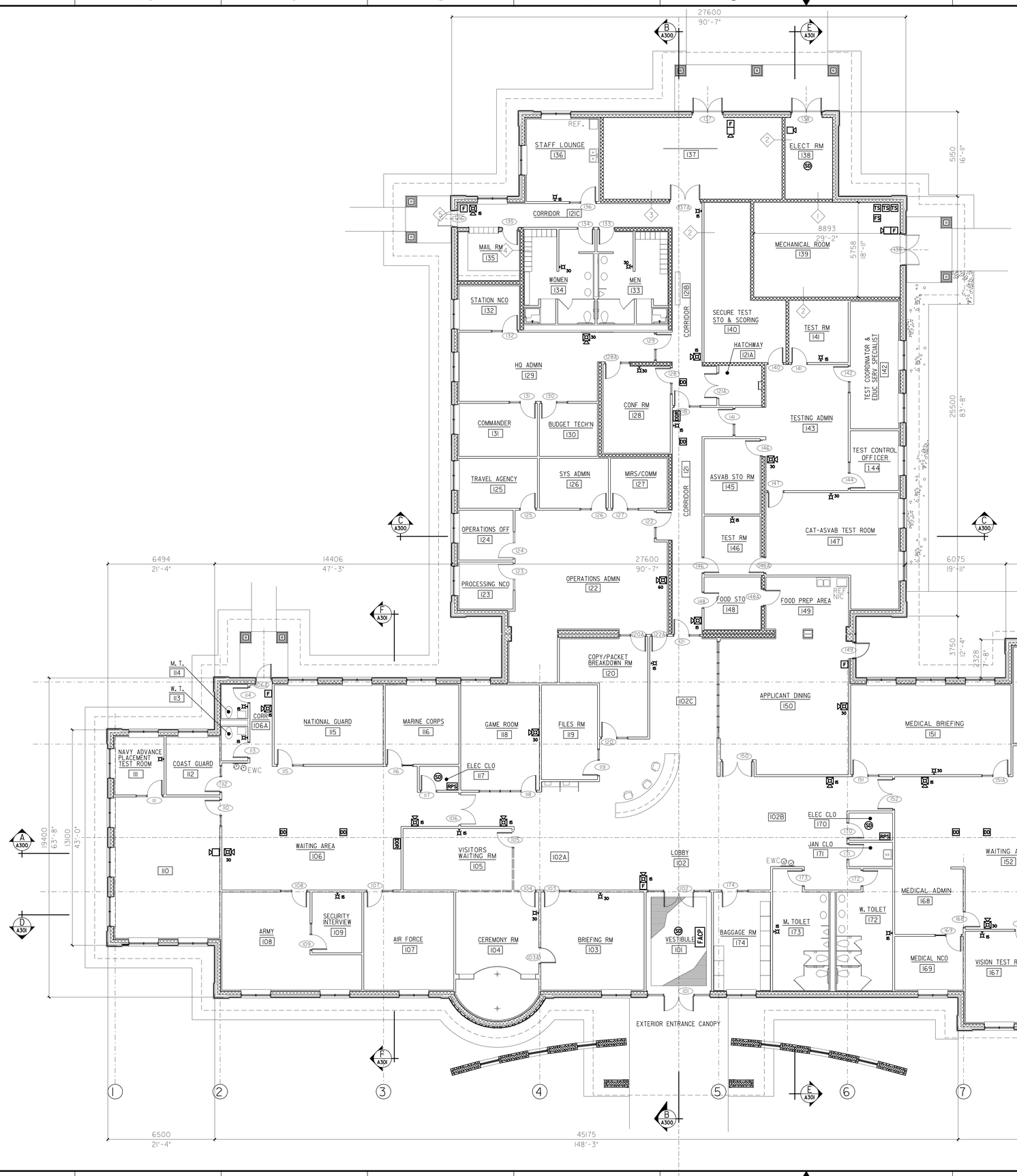

FIRE ALARM SYMBOLS

- FACP — FIRE ALARM CONTROL PANEL SIMPLEX 4010 W/ MODULAR NETWORK CARD AND DAUGHTER HARDWARE MEDIA CARD
- F — MANUAL PULL STATION
- FS — MONITOR MODULE FOR SPRINKLER FLOW SWITCH
- TS — MONITOR MODULE FOR TAMPER SWITCH
- SD — SMOKE DETECTOR
- DD — DUCT SMOKE DETECTOR (ABOVE CEILING)
- DDR — DUCT SMOKE DETECTOR REMOTE L.E.D. (WALL MOUNT BENEATH CEILING)
- FIRE ALARM HORN
- FIRE ALARM HORN/STROBE — XX INDICATES CANDELA RATING
- FIRE ALARM STROBE — XX INDICATES CANDELA RATING
- CR — ADDRESSABLE CONTROL RELAY (FAN SHUTDOWN)
- RPS — REMOTE POWER SUPPLY PANEL

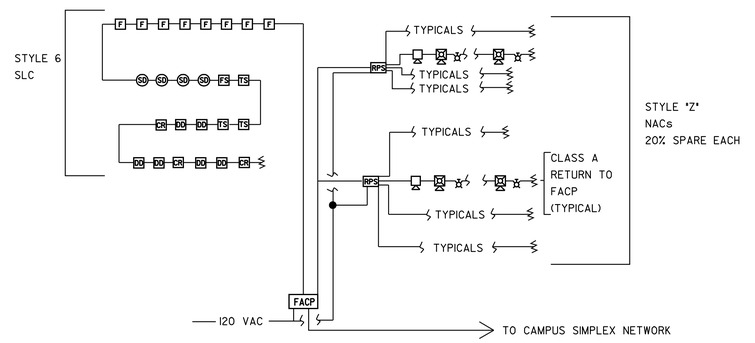

FIRE ALARM RISER DIAGRAM

ALL DIMENSIONS ARE GIVEN IN MILLIMETERS.

0 1 2 4 6 8 10M

SCALE 1 : 100

US Army Corps of Engineers
New York District

Symbol	Description	Date	Appr.

Designed by: | Date: | Size: | Rev.
Dwn by: FWS | Ckd by: | Drawing file no:
Reviewed by: | Drawing code:
Submitted by: | Plot date: 19-NOV-2004 16:52 | Plot by: sdaimone | Size: 120x90x0.000000
File name: S:\Benson\military\Niagara Falls\MEPS\Mechanical\MEPS_FP-100.dgn

U.S. ARMY ENGINEER DISTRICT
CORPS OF ENGINEERS
NEW YORK, NEW YORK

PN 59873
MILITARY ENTRANCE PROCESSING STATION (MEPS)
NIAGARA FALLS, NY

FIRE ALARM FLOOR PLAN

Sheet reference number:
FA–01

Submitted by: e3jemmee
Plot Date: 19-NOV-2004 16:52
Sa:\Benson\military\Niagara Falls\MEPS\Mechanical\MEPS_FP-100.dgn

INSPECTOR'S TEST CONNECTION DETAIL
NOT TO SCALE

NOTE:

PROVIDE HYDRAULICALLY CALCULATED SPRINKLER SYSTEM TO PROTECT ENTIRE BUILDING. ALL AREAS, EXCEPT THOSE INDICATED BY HASH MARKS ARE LIGHT HAZARD. ROOMS MARKED BY HASH LINES ARE ORDINARY HAZARD GROUP I. SIZE PIPE AS FOLLOWS:

LIGHT HAZARD: 4.1L/MIN/M² OVER 280 M².
ORDINARY HAZZARD: 6.1L/MIN/M² OVER 280 M².

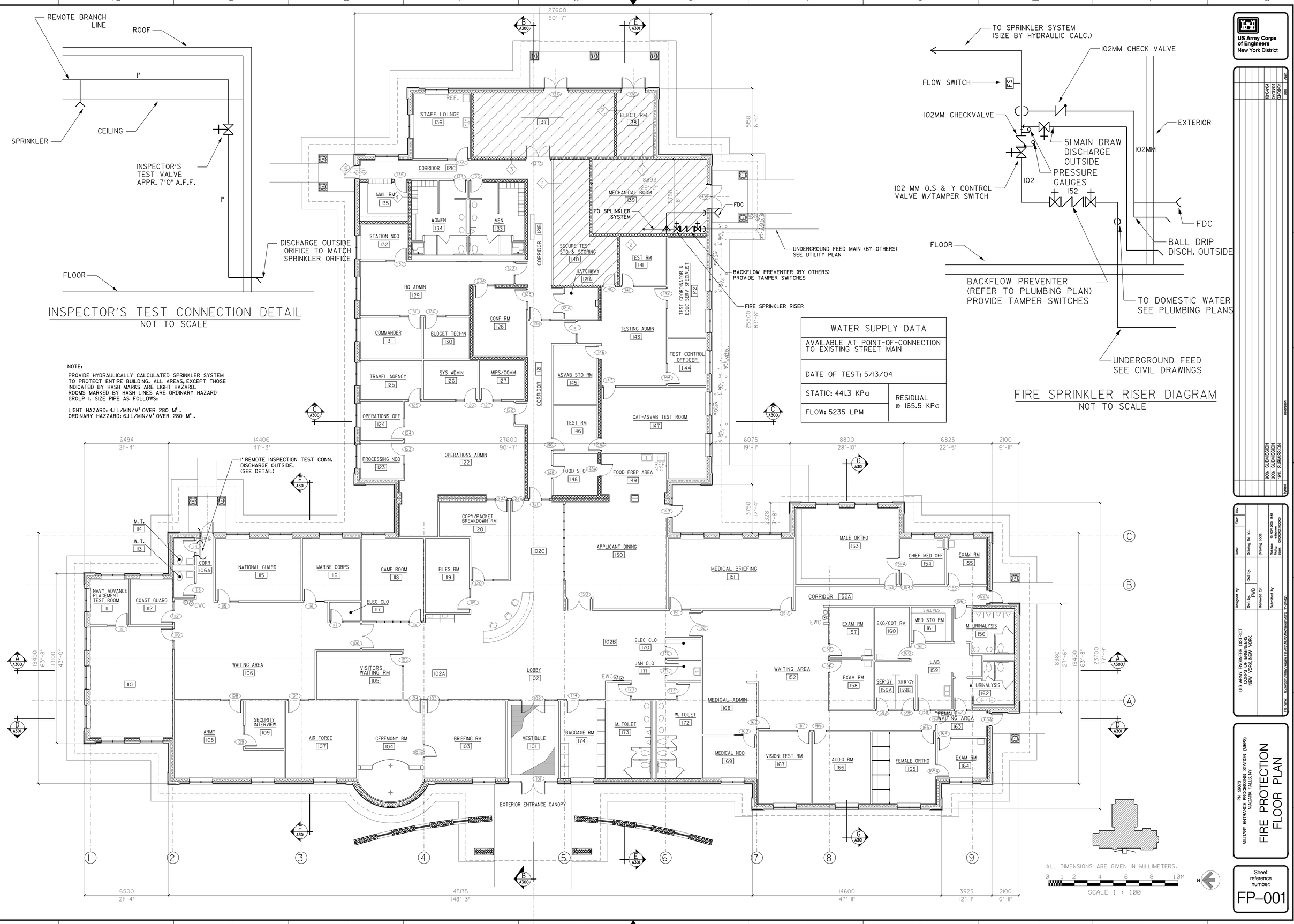

WATER SUPPLY DATA	
AVAILABLE AT POINT-OF-CONNECTION TO EXISTING STREET MAIN	
DATE OF TEST: 5/13/04	
STATIC: 441.3 KPa	RESIDUAL @ 165.5 KPa
FLOW: 5235 LPM	

FIRE SPRINKLER RISER DIAGRAM
NOT TO SCALE

US Army Corps of Engineers
New York District

Symbol	Description	Date	Appr.
90% SUBMISSION		10/04/04	
100% SUBMISSION		03/09/04	
95% SUBMISSION		03/09/04	

Designed by: | Date: | Size: | Rev.:
Dwn by: FWB | Ckd by: | Drawing file no.:
Reviewed by: | Drawing code:
Submitted by: | Print date: 19-NOV-2004 14:51 | Plot by: ADMIN | Plot file: 100_FP001.dwg
File name: S:\Benson\military\Niagara Falls\MEPS\Mechanical\MEPS FP-001.dgn

U.S. ARMY ENGINEER DISTRICT
CORPS OF ENGINEERS
NEW YORK, NEW YORK

MILITARY ENTRANCE PROCESSING STATION (MEPS)
PN 58673
NIAGARA FALLS, NY

FIRE PROTECTION FLOOR PLAN

Sheet reference number:
FP-001

Submitted by: e3jetmee
Sa:Mechanical\Niagara Fall AFB\MEPS\Mechanical\MEPS FP-001.dgn
Plot Date: 19-NOV-2004 15:51

SYMBOLS (POWER)

(symbol)	HARD-WIRED CONNECTION
(symbol)	EQUIPMENT CONNECTION, AS NOTED
(symbol)	WATER HEATER CONNECTION
(symbol)	MOTOR CONNECTION
J / J	JUNCTION BOX
(symbol)	PANELBOARD, SURFACE MOUNTED
(symbol)	PANELBOARD, RECESSED
(symbol)	DISTRIBUTION/POWER PANEL
(symbol)	DISCONNECT SWITCH
(symbol)	FUSED DISCONNECT SWITCH
(symbol)	COMBINATION MAGNETIC MOTOR STARTER
CB	ENCLOSED CIRCUIT BREAKER
T	TRANSFORMER
(symbol)	CONCRETE COMBINATION FLOOR BOX WITH DATA/COMM/PWR OUTLET(S)
P / C	WALL MOUNTED (RECESSED) JUNCTION BOX FOR (R) DATA/COMM AND (P) PWR TO DEMOUNTABLE PARTITION WITH WHIP (WHIP BY OTHERS, INSTALLED BY DIV 16)
(symbol)	DUPLEX RECEPTACLE, 125V, 15A, 2P, 3W NEMA 5-20R
IG	DUPLEX RECEPTACLE, 125V, 15A, 2P, 3W NEMA 5-20R (ISOLATED GROUND)
GFCI	DUPLEX RECEPTACLE, 125V, 15A, 2P, 3W NEMA 5-20R (GROUND FAULT CURRENT INTERRUPTOR)
D	DUPLEX RECEPTACLE, 125V, 15A, 2P, 3W NEMA 5-20R (DEDICATED CIRCUIT)
(symbol)	DUPLEX RECEPTACLE, 125V, 15A, 2P, 3W NEMA 5-20R (ABOVE COUNTER)
WP	DUPLEX RECEPTACLE, 125V, 15A, 2P, 3W NEMA 5-20R (WEATHER PROOF)
S_{MOL}	MOTOR STARTER (MANUAL W/OVERLOADS)
S_M	MOTOR RATED SWITCH
RP-5 7 2-#12, #12G, 3/4"C	HOME RUN WIRES AND CONDUIT (3-#12, #12G, 3/4"C) WITH PANEL DESIGNATION (RP-5), AND CIRCUIT NUMBER (7)
(symbol)	TRANSFORMER CONNECTION DELTA-GROUNDED WYE
(symbol)	GROUND ROD/CONNECTION
TVSS	TRANSIENT VOLTAGE SURGE SUPRESSOR
KWH	KILOWATT-HOUR METER W/15MIN DEMAND REGISTER
M	METER
100 AT / 225 AF	CIRCUIT BREAKER, WITH AMPERE TRIP (100AT) AND AMPERE FRAME (225AF)

SYMBOLS (LIGHTING)

S	SINGLE POLE SWITCH, 20A, 120/277VAC
S_3	THREE-WAY SWITCH, 20A, 120/277VAC
S_4	FOUR-WAY SWITCH, 20A, 120/277VAC
S_D	SWITCH, DIMMER
S_E	SWITCH, EMERGENCY SHUT-OFF
S_K	SWITCH, KEY OPERATED
S_P	SWITCH WITH PILOT LIGHT
S_{OS}	SWITCH, OCCUPANY SENSOR
OS	OCCUPANCY SENSOR (CEILING MOUNTED)
(symbol)	1' X 4' GRID MOUNTED LUMINAIRE
(symbol)	1' X 4' GRID MOUNTED LUMINAIRE WITH EMERGENCY INVERTER BALLAST
(symbol)	2' X 2' GRID MOUNTED LUMINAIRE
(symbol)	2' X 2' GRID MOUNTED LUMINAIRE WITH EMERGENCY INVERTER BALLAST
(symbol)	2' X 4' GRID MOUNTED LUMINAIRE
NL	2' X 4' GRID MOUNTED LUMINAIRE WITH EMERGENCY INVERTER BALLAST (DESIGNATED AS NIGHT-LIGHT)
(symbol)	4' INDUSTRIAL LUMINAIRE
(symbol)	4' INDUSTRIAL LUMINAIRE WITH EMERGENCY INVERTER BALLAST
(symbol)	DOWNLIGHT, CEILING MOUNTED
(symbol)	DOWNLIGHT, CEILING MOUNTED WITH CROSS BAFFLE
(symbol)	ILLUMINATED EXIT SIGN WITH DIRECTIONAL ARROWS, BATTERY TYPE
A d	FIXTURE TYPE AS NOTED ON SCHEDULE. TYPE APPLIES TO AREA WHERE SYMBOL IS SHOWN. d-INDICATES DIMMING BALLAST

SYMBOLS (SYSTEMS)

W	COMM (VOICE) OUTLET) ON SINGLE-GANG BOX WITH SINGLE GANG REDUCER 1" C. 'W' INDICATES WALL MOUNTED AT 4'0" AFF.
D	DATA OUTLET ON SINGLE-GANG BOX WITH SINGLE-GANG REDUCER 1" C.
(symbol)	COMBINATION DATA/COMM OUTLETS ON DOUBLE GANG BOX WOTH SINGLE GANG REDUCER IN 1" C.
(symbol)	FLOOR MOUNTED COMBINATION DATA/COMM OUTLETS ON DOUBLE-GANG BOX WITH SINGLE-GANG REDUCER IN 1" C.
TV	T.V. SIGNAL JACK AND RECEPTACLE OUTLET LOCATION AT 72" AFF UNLESS NOTED OTHERWISE
SP	PA (MASS NOTIFICATION) SYSTEM SPEAKER, CEILING MOUNTED
SP	PA (MASS NOTIFICATION) SYSTEM SPEAKER, WALL MOUNTED
(symbol)	PA (MASS NOTIFICATION) SYSTEM STROBE/FLASHER, WALL MOUNTED

GENERAL NOTES:

1. CONDUIT SIZES SHOWN PLANS ARE MINIMUM AND ARE BASED ON THWN WIRING. IF OTHER CONDUCTORS ARE USED, THE CONDUIT SIZES SHALL BE REVISED ACCORDINGLY TO PROVIDE 40% (MAX) CONDUIT FILL IN ACCORDANCE WITH NEC AT NO ADDITIONAL EXPENSE TO THE GOVERNMENT.
2. GROUND ALL EXPOSED BUILDING STEEL USING NO. 4 AWG COPPER CONDUCTOR. BOND STEEL ACROSSALL SEISMIC JOINTS AND EXPANSION JOINTS USING NO. 4 AWG COPPER CONDUCTOR AND WHERE REQUIRED FOR CONTINUITY.
3. ALL FIXTURES AND EQUIPMENT SHALL BE ADEQUATELY ANCHORED FOR SEISMIC ZONE 2.
4. THE SHORT CIRCUIT RATING INDICATED IS BASED ON THE IMPEDANCE OF THE SERVICE TRANSFORMER SHOWN. IF IMPEDANCE OF THE TRANSFORMER PROVIDED DIFFERS, THE CONTRACTOR SHALL RECALCULATE THE SHORT CIRCUIT CURRENT AND SHALL PROVIDE EQUIPMENT AND DEVICES IN ACCORDANCE WITH THE RECALCULATED RATING AT NO ADDITIONAL COST TO THE GOVERNMENT.
5. CONDUIT PENETRATIONS THROUGH FIRE RATED WALLS, PARTITIONS AND/OR CEILINGS SHALL BEPROVIDED WITH APPROVED FITTINGS AND FIRE RETARDANT SEALANTS.
6. FLUSH-MOUNTED PANELBOARDS SHALL BE PROVIDED WITH TWO - 3/4 INCH CONDUITS (EMPTY WITH PULL WIRES FROM THE TOP OF THE PANELBOARD) AND TERMINATED WITH 4" X 4" JB (WITH BLANK COVERS MARKED AS SPARE) 12" ABOVE THE SUSPENDED CEILING.
7. EACH LIGHTING AND RECEPTACLE OUTLET CIRCUIT SHALL BE PROVIDED WITH A DEDICATED GROUND AND NEUTRAL CONDUCTOR. ADDITIONALLY, ISOLATED GROUND RECEPTACLE CIRCUITS (INCL THE PRE-WIRED WORK STATIONS) SHALL BE PROVIDED WITH AN ISOLATED GROUND CONDUCTOR.
8. WORK SHALL BE ACCOMPLISHED IN ACCORDANCE WITH THE LATEST EDITION OF THE NEC, NFPA, OSHA, GOVERNING FEDERAL, STATE, AND LOCAL INSTRUCTIONS/REGULATIONS.
9. ELECTRICAL CONTRACTOR SHALL INSTALL MECHANICAL CONTRACTOR FURNISHED MECHANICAL EQUIPMENT STARTERS, VFDs, CONTROLLERS, METERING, SAFETY SWITCHES AND/OR DISCONNECT SWITCHES.
10. DRAWINGS ARE DIAGRAMATIC AND DO NOT SHOW OFFSETS, BENDS, ELBOWS, JBs, TROUGHS, PULL BOXES AND OTHER REQUIRED EQUIPMENT/HARDWARE FOR THE PROPER AND COMPLETE INSTALLATION OF WORK. CONTRACTOR SHALL PROVIDE ALL THE NECESSARY MATERIALS FOR A COMPLETE ELECTRICAL SYSTEM TO FULFILL THE INTENTION OF THE PROJECT.
11. UNUSED CONDUITS SHALL BE LABELED (ORIGIN/TERMINATION), BE PROVIDED WITH NYLON PULL STRINGS, AND CAPPED AT THE ENDS (INCLUDING AT THE HAND/MAN HOLES).
12. INSTALLATION OF WORK SHALL BE COORDINATED WITH OTHER DISCIPLINES. EXCAVATION SHALL BE SCHEDULED WITH THE CONTRACTING OFFICER 5-WORKING DAYS PRIOR TO CONDUCTING THE WORK.
13. REPLACEMENT, RELOCATION AND RE-ROUTING OF UNDERGROUND COMMUNICATION CABLES SHALL BE SCHEDULED/COORDINATED WITH THE CONTRACTING OFFICER AND THE BASE COMMUNICATIONS SQUADRON PERSONNEL.
14. MC CABLE USE SHALL BE LIMITED TO A MAXIMUM LENGTH OF 6'-0".

ABBREVIATIONS

A, AMP	AMPERES
AC	ALTERNATING CURRENT
ACU	AIR CONDITIONING UNIT
AF	AMPERE FRAME (CIRCUIT BREAKER)
AFF	ABOVE FINISHED FLOOR
AFG	ABOVE FINISHED GRADE
AH	AIR HANDLER
AHU	AIR HANDLING UNIT
AIC	AMPERE INTERRUPTING CURRENT
AL	ALUMINUM
ALT	ALTERNATE
AM	AMMETER
AT	AMPERE TRIP
ATC	AUTOMATIC TEMPERATURE CONTROL
ATS	AUTOMATIC TRANSFER SWITCH
AUX	AUXILIARY
AWG	AMERICAN WIRE GAUGE
BAS	BUILDING AUTOMATION SYSTEM
BKR	BREAKER
BLDG	BUILDING
BPI	BYPASS ISOLATION SWITCH
/C	CONDUCTOR
C	CONDUIT
CB	CIRCUIT BREAKER
CCTV	CLOSED CIRCUIT TV
CIR	CIRCUIT
CKT('G)	CIRCUITING
CLG	CEILING
COL	COLUMN
COMM	COMMUNICATIONS
CONN	CONNECTION
CT	CURRENT TRANSFORMER
CU	COPPER
D/B	DIRECT BURIED
DC	DIRECT CURRENT
DIA	DIAMETER
DN	DOWN
DISC	DISCONNECT
DIST	DISTRIBUTION
DWG	DRAWING
EA	EACH
EC	ELECTRICAL CONTRACTOR
EF	EXHAUST FAN
ELECT, ELEC	ELECTRIC
ELEV	ELEVATION
EMER	EMERGENCY
EMT	ELECTRIC METALLIC TUBING
EWC	ELECTRIC WATER COOLER
FCU	FAN COIL UNIR
FIXT	FIXTURE
FLA	FULL LOAD AMPS
FLR, FL	FLOOR
FLOUR	FLUORESCENT
FO	FIBER OPTIC
FU	FUSE
GEN	GENERATOR
GFCI	GROUND FAULT CURRENT INTERRUPTOR

ABBREVIATIONS (CON'T)

GND, GRD	GROUND
HID	HIGH INTENSITY DISCHARGE
HOA	HAND-OFF-AUTOMATIC
HP	HORSE POWER
HT	HEIGHT
HV	HIGH VOLTAGE
IG	ISOLATED GROUND
IMC	INTERMEDIATE METALIC CONDUIT
JB, JBOX	JUNCTION BOX
KA	KILOAMPERES
KV	KILOVOLTS
KW	KILOWATTS
KVA	KILO VOLT-AMPERES
KCMIL	THOUSAND CIRCULAR MILS
LAN	LOCAL AREA NETWORK
LTG	LIGHTING
MAX	MAXIMUM
MCB	MAIN CIRCUIT BREAKER
MDP	MAIN DISTRIBUTION PANEL
MFR	MANUFACTURER
MIN	MINIMUM
MLO	MAIN LUGS ONLY
MTD	MOUNTED
MTG	MOUNTING
N	NEUTRAL
NEC	NATIONAL ELECTRICAL CODE
NEMA	NAT ELECT MANUFACTURERS ASSO
NC	NORMALLY CLOSED
NIC	NOT IN CONTRACT
NO	NORMALLY OPEN
NORM	NORMAL
NTS	NOT TO SCALE
OC	ON CENTER
OVHD	OVERHEAD
P	POLE
PA	PUBLIC ADDRESS
PB	PUSHBUTTON
PBX	PRIVATE BRANCH EXCHANGE
PF	POWER FACTOR
PH	PHASE
PNL	PANEL
PRI	PRIMARY
PWR	POWER
QTY	QUANTITY
REC, RECPT	RECEPTACLE
RGSC	RIGID GALVANIZED STEEL CONDUIT
SEC	SECONDARY
SF	SUPPLY FAN
SPEC	SPECIFICATIONS
SPKR	SPEAKER
STD	STANDARD
STP	SHELDED TWISTED PAIR
STR	STARTER
SW	SWITCH
SWBD	SWITCHBOARD
SYS	SYSTEM
TEL, TELE	TELEPHONE

ABBREVIATIONS (CON'T)

TV	TELEVISION
TVSS	TRANSIENT VOLTAGE SURGE SUPPRESSOR
TMGB	TELECOMMUNICATION MASTER GROUND BAR
TYP	TYPICAL
UC	UNDER COUNTER
UG	UNDERGROUND
UL	UNDERWRITERS LABORATORY
UNO	UNLESS NOTED OTHERWISE
UPS	UNINTERRUPTIBLE POWER SUPPLY
UTP	UNSHIELDED TWISTED PAIR
V	VOLT
VA	VOLT-AMPS
WM	WATTMETER
WP	WEATHERPROOF
XFMR	TRANSFORMER

ELECTRICAL SITE PLAN KEY NOTES:

POWER: PROVIDE FEEDER TO THE MEPS BUILDING.

(1) CONNECT MEDIUM VOLTAGE FEEDER TO THE EXISTING OVERHEAD LINES ON POLE No. 134.

(2) PROVIDE UNDERGROUND MEDIUM VOLTAGE FEEDERS (CONCRETE ENCASED) FROM UTILITY POLE No. 134 TO THE PAD MOUNTED SERVICE TRANSFORMER. REFER TO CIVIL DRAWINGS AND ELECT PLAN DRAWINGS FOR ADDITIONAL INFORMATION.

(3) INSTALL PAD SERVICE MOUNTED TRANSFORMER 35 FEET FROM THE MEPS BUILDING. REFER TO CIVIL DRAWINGS FOR THE EXACT LOCATION OF CONCRETE PAD.

(16) PROVIDE UG FEEDER(S) FROM THE MEPS SERVICE SWITCHBOARD TO THE CHILLER. REFER TO CIVIL DRAWINGS FOR THE EXACT LOCATION OF AND ELECTRICAL DETAILS FOR CONDUCTOR AND CONDUIT SIZES.

LIGHTING: PROVIDE MEPS BUILDING WITH SITE LIGHTING SYSTEMS (PARKING LOT, DRIVEWAY, WALKWAY AND SIGNAGE).

(4) PROVIDE UNDERGROUND LOW VOLTAGE FEEDER FROM THE PAD MOUNTED SERVICE TRANSFORMER TO THE MEPS SERVICE SWITCHBOARD.

(5) a. POLE MOUNTED TYPE 'Q' PARKING LOT AND DRIVEWAY LIGHTING SYSTEM SHALL BE PROVIDED WITH SEPARATE UNDERGROUND HOME RUNS AND CONTROLLED BY A COMMON WALL MOUNTED ASTRONOMIC TIMER IN THE LOBBY ELETRCICAL CLOSET. EACH LUMINAIRE SHALL BE PROVIDED WITH A PHOTOCELL.
b. UNDERGROUND HOME RUN FOR POLE MOUNTED TYPE 'Q' WALKWAY LUMINAIRE SHALL BE CONTROLLED BY A TIMER MOUNTED NEAR PANEL PM IN THE MECHANICAL ROOM.

(6) UNDERGROUND HOME RUN FROM THE FRONT BOLLARDS (TYPE 'R') AND THE SIGNAGE (TYPE 'J') LUMINAIRES SHALL BE CONTROLLED BY A WALL MOUNTED ASTRONOMIC TIMER IN THE LOBBY ELECTRICAL CLOSET.

COMMUNICATIONS: PROVIDE COMM SERVICE AND UNDERGROUND DUCTS SYSTEM. REVISE EXISTING SITE COMMUNICATION AND UG DUCT SYSTEMS. CONNECTION TO EXISTING COMMUNICATION SERVICES SHALL BE HOT SPLICED AND FO CABLES BE FUSION SPLICED. UG DUCTS SHALL BE INSTALLED THROUGH BORED TRENCHES. CABLES SHALL BE PROVIDED WITH MAINTENANCE LOOP PRIOR TO CONNECTION TO TTB OR PATCH PANELS. REPLACED CABLES SHALL BE REMOVED.

(7) a. RELOCATE INDICATED EXISTING 6-WAY UNDERGROUND DUCTS. EXISTING FLEXIBLEINNER-DUCTS (MAXCELL) SHALL BE PULLED BACK TO MH 2 AND REINSTALLED IN THE REPLACEMENT DUCTS THROUGH THE COMM VAULT.
b. NEW LOCATION/ROUTE OF 6-WAY UNDERGROUND DUCTS. PROVIDED WITH A MANHOLE (MH 2) AS SHOWN.

(8) a. PROVIDE MHs 4 AND 5. MH 5 SHALL BE INSTALLED ADJACENT TO THE EXISTING SPLICE OF THE 2100-PAIR TELEPHONE CABLE MENTIONED ON (13) BELOW.
b. PROVIDE 6-WAY 4" UNDERGROUND CONDUITS FROM EXISTING MH 3 TO MH 5 (VIA MH 4).
c. PROVIDE 2-4" UNDERGROUND CONDUIT FROM MH 4 TO B-807.

COMMUNICATIONS: (CON'T)

(9) a. REPLACE EXISTING 1200-PAIR D/B TELEPHONE CABLE FROM COMM VAULT NORTH OF B-806 TO B-807. REPLACEMENT CABLE SHALL BE ROUTED THROUGH MHs 4, 3, 2 AND 1 (IN 4" DUCT), AND SPLICED IN THE COMM VAULT. CONNECT WIRES 876-TO-1075 TO THE TTB IN B 807.
b. PROVIDE A 25-PAIR UG D/B TELEPHONE CABLE FROM B 860 TO MH 4. SPLICE THE 25-PAIR CABLE WITH WIRES 1176-TO-1200 OF THE 1200-PAIR CABLE INDICATED ON (9a) ABOVE AT MH 4.
c. SPLICE EXISTING B 855 CABLE WITH WIRES 1076-TO-1100 OF THE 1200-PAIR CABLE INDICATED ON (9a) ABOVE AT SPLICE LOCATION SHOWN.
d. UN-USED WIRES FROM THE 1200-PAIR CABLE SHALL BE TERMINATED AT MH 4 AND BE SPLICED WITH OTHER SERVICES TO OTHER BUILDINGS.

(10) REPLACE EXISTING D/B 18-STRAND SM AND 24-STRAND MM FO CABLES FROM B-806 TO B-807. REPLACEMENT FO CABLE SHALL BE BOTH 24-STRAND (1-SM, 1-MM) ROUTED THROUGH MHs 4,3,2,1 AND THE COMM VAULT, AND BE CONNECTED TO THE SAME PATCH PANELS IN B-806 AND B-807. UG DUCTS UTILIZED FOR THE INSTALLATION OF FO CABLES SHALL BE PROVIDED WITH 4-1" FLEXIBLE INNER DUCTS. REPLACEMENT CABLES SHALL BE INSTALLED PRIOR TO THE REMOVAL OF FORMER CABLES.

(11) PROVIDE A NEW 300-PAIR TELEPHONE CABLE FROM THE COMM VAULT TO MH 3. RE-ROUTE EXISTING B 204, 300-PAIR TELEPHONE SERVICE CABLE THROUGH MH 3. SPLICE EXISTING WITH THE NEW 300-PAIR CABLES IN MH 3. PROVIDE A NEW 12-STRAND SM FO CABLE PROM THE PATCH PANEL IN B 806 TO MH 3. RE-ROUTE EXISTING B 204, 12-STRAND SM FO CABLE THROUGH MH 3. SPLICE EXISTING WITH THE NEW FO CABLE IN MH 3.

(12) PROVIDE MEPS BUILDING WITH A 200-PR TELEPHONE CABLE FROM MIRS/COMM ROOM TO MH 1. SPLICE THE 200-PAIR CABLE INDICATED ON (13) BELOW. ONE OF 4"C., FROM MIRS/COMM RM TO B-806 SHALL BE PROVIDED WITH A FLEXIBLE INNER DUCT FOR THE INSTALLATION OF A 12-STRAND SM FO CABLE. FO CABLE SHALL BE TERMINATED AT B 806 PATCH PANEL.

(13) REPLACE EXISTING 2100-PAIR D/B TELEPHONE CABLE FROM COMM VAULT NORTH OF B-806 TO THE EXISTING D/B SPLICE AT THE NORTHWEST CORNER ENT AVE AND WAGNER DRIVE. REPLACEMENT CABLE SHALL BE 2-1200 PAIR CABLES AND SHALL BE ROUTED THROUGH MHS 5, 4, 3, 2, 1, AND THE SPLICED AT MH 5 AND IN THE COMM VAULT. KEY NOTE (8a) ABOVE FOR ADDITIONAL INFORMATION.
a. IDENTIFY ONE OF THE 1200-PAIR CABLES AS PAIR 1-1200, AND 1201 TO 2400 FOR THE SECOND CABLE.
b. SPLICE THE SECOND 1200-PAIR CABLE WITH THE 200-PAIR CABLE FROM THE MEPS MIRS/COMM RM AT MH 1. UTILIZE PAIRS 2201-2400.

(14) UTILIZE 2-PAIRS FROM THE NEW 200-PAIR TELEPHONE CABLE FROM THE MEPS MIRS/COMM ROOM TO THE COMM VAULT AND 2-PAIRS FROM THE EXISTING 1675-PAIR TELEPHONE CABLE FROM THE COMM VAULT TO B-800 ANDOVER INFINITY CX 9200 CONTROL PANEL FOR THE MEPS BUILDING REMOTE HVAC EQUIPMENT CONTROL. REFER TO MECHANICAL DRAWINGS FOR ADDITIONAL INFORMATION.

(15) UTILIZE TWO (2) 2-PAIRS FROM THE NEW 200-PAIR TELEPHONE CABLE FROM MEPS MIRS/COMM ROOM TO THE B-806 TO CONNECT THE BASE-WIDE FIRE ALARM AND MASS-NOTIFICATION SYSTEMS.

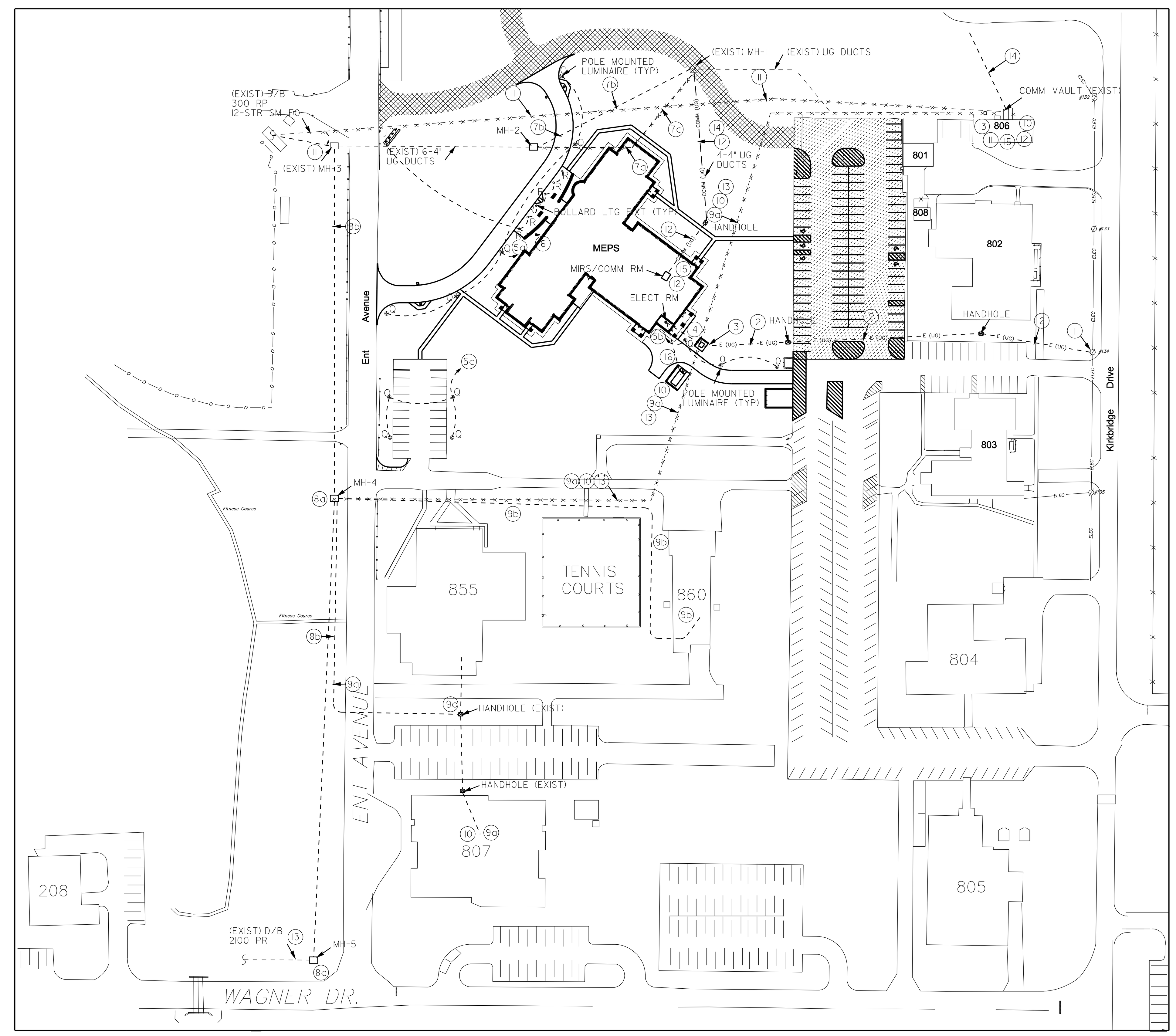

ELECTRICAL SITE PLAN
SCALE: 1" = 100'

US Army Corps of Engineers
New York District

U.S. ARMY ENGINEER DISTRICT
CORPS OF ENGINEERS
NEW YORK, NEW YORK

Designed by: | Dwn by: | Ckd by: | Reviewed by: | Submitted by: | Date: | Size: | Rev.: | Drawing file no.: | Drawing code:

Plot date: 19-NOV-2004 16:06
Plot by: e3jetmwe
Scale: 1.679790:1.000000

File name: S:\fileroom\military\Niagara Fall AFB\MEPS\Electrical\90%(+)Submis'n\ElectDwgs\E-01Gen.dgn

PN 59873
MILITARY ENTRANCE PROCESSING STATION (MEPS)
NIAGARA FALLS, NY

SYMBOLS, ABBREVIATIONS & ELECTRICAL SITE PLAN

Sheet reference number:
E-01

GENERAL NOTES:

1. REFER TO MECHANICAL DRAWINGS FOR THE ACTUAL LOCATION OF MECHANICAL EQUIPMENT.
2. CONVENIENCE RECEPTACLE OUTLET HOME RUNS SHALL BE 2-#12, #12(G), ¾"C., UNLESS NOTED OTHERWISE.
3. MC CABLE USE SHALL BE LIMITED TO A MAXIMUM LENGTH OF 6 FEET.
4. LOCATION OF SWITCHES, RECEPTACLES, PANELS, DISCONNECT SWITCHES, PULL BOXES, ENCLOSED CBs AND OTHER DEVICES/EQUIPMENT ARE APPROXIMATE. COORDINATE EQUIPMENT LOCATION WITH OTHER TRADES TO PREVENT INTERFERENCE.
5. REFER TO SITE ELECTRICAL PLAN FOR OUTDOOR POWER WORK.
6. DRAWING SHOWS THE CORRECT NUMBER OF RECEPTACLE OUTLETS AND DATA/COMM JACKS. FINAL LOCATION OF DEVICES MAY CHANGE TO ACCOMODATE THE FINAL FURNITURE ARRANGEMENT.
7. REFER TO MECHANICAL EQUIPMENT CONNECTION SCHEDULE FOR CIRCUITING INFORMATION AND FEEDER SIZES OF MECHANICAL EQUIPMENT.

POWER KEY NOTES:

1. ABOVE CEILING MOUNTED HVAC EQUIPMENT.
2. ISOLATED GROUND RECEPTACLE OUTLET HOME RUNS SHALL BE 2-#12, #12(G), #12(IG), ¾"C., UNLESS NOTED OTHERWISE.
3. REFER TO ENLARGE MECHANICAL ROOM DETAIL ON THIS SHEET FOR MECHANICAL ROOM ELECTRICAL ARRANGEMENT.
4. FLUSH/FLOOR MOUNTED TWO GANG (DATA/COMM, PWR) SERVICE FITTING TO MODULAR FURNITURE SYSTEM. POWER SERVICE FITTING SHALL INCLUDE ISOLATED GROUND HOME RUN CIRCUIT. CIRCUITS SHALL BE ROUTED BELOW GRADE.
5. FRACTIONAL HORSEPOWER MOTOR.
6. TV DEDICATED SIMPLEX OUTLET AT 72" AFF.
7. EMCS DEDICATED POWER AT 72"AFF.
8. FLOOR MOUNTED FLUSH RECEPTACLE OUTLET.
9. FLOOR MOUNTED, FLUSH, TWO-GANG (DATA, IG PWR) SERVICE FITTINGS.
10. FLUSH, WALL MOUNTED TWO GANG (DATA/COMM, PWR) SERVICE FITTINGS TO MODULAR FURNITURE SYSTEM. POWER SERVICE FITTING SHALL INCLUDE ISOLATED GROUND CONDUCTORS IN 5' X ½" D., INSULATED FLEXIBLE CONDUIT.
11. a. PROVIDE SERVICE FOR TWO (2) MODULAR FURNITURE SYSTEMS.
    b. PROVIDE SERVICE FOR FOUR (4) MODULAR FURNITURE SYSTEMS.
12. MOUNT DEDICATED OUTLET ON THE TTB.
13. FEEDER RUNS TO/FROM FLUSH FLOOR OUTLETS SHALL BE ROUTED BELOW GRADE.
14. PROVIDE HEAT TRACING FOR THE PIPING SYSTEM IN THE AREA INDICATED.
15. POWER TO AHU MOTORIZED LOUVRE, RECEPTACLE OUTLET AND LIGHTING SYSTEM.
16. CEILING MOUNTED 120V 20A IPH [2#12, #12(G), ¾"C.] L5-20R
    DEDICATED TWIST-LOCK OUTLETS FOR THE DATA/COMM EQUIPMENT CABINETS PROVIDE 20FT 3c#12AWG SO CABLE & L5-20P FOR CONNECTION TO POWER RECEPTICLES IN CABINETS
17. 120V IPH (2#12, #12(G), ¾"C.) FOR TO 1½ HP UNDER COUNTER IN-SINK-ERATOR.
18. MOUNT OUTLETS 6" ABOVE BENCH.
19. PROVIDE 120V IPH (2#12, #12(G), ¾" C.) POWER TO PROXIMITY ACCESS CONTROL SYSTEM. REFER TO DETAILS FOR ADDITIONAL INFORMATION.

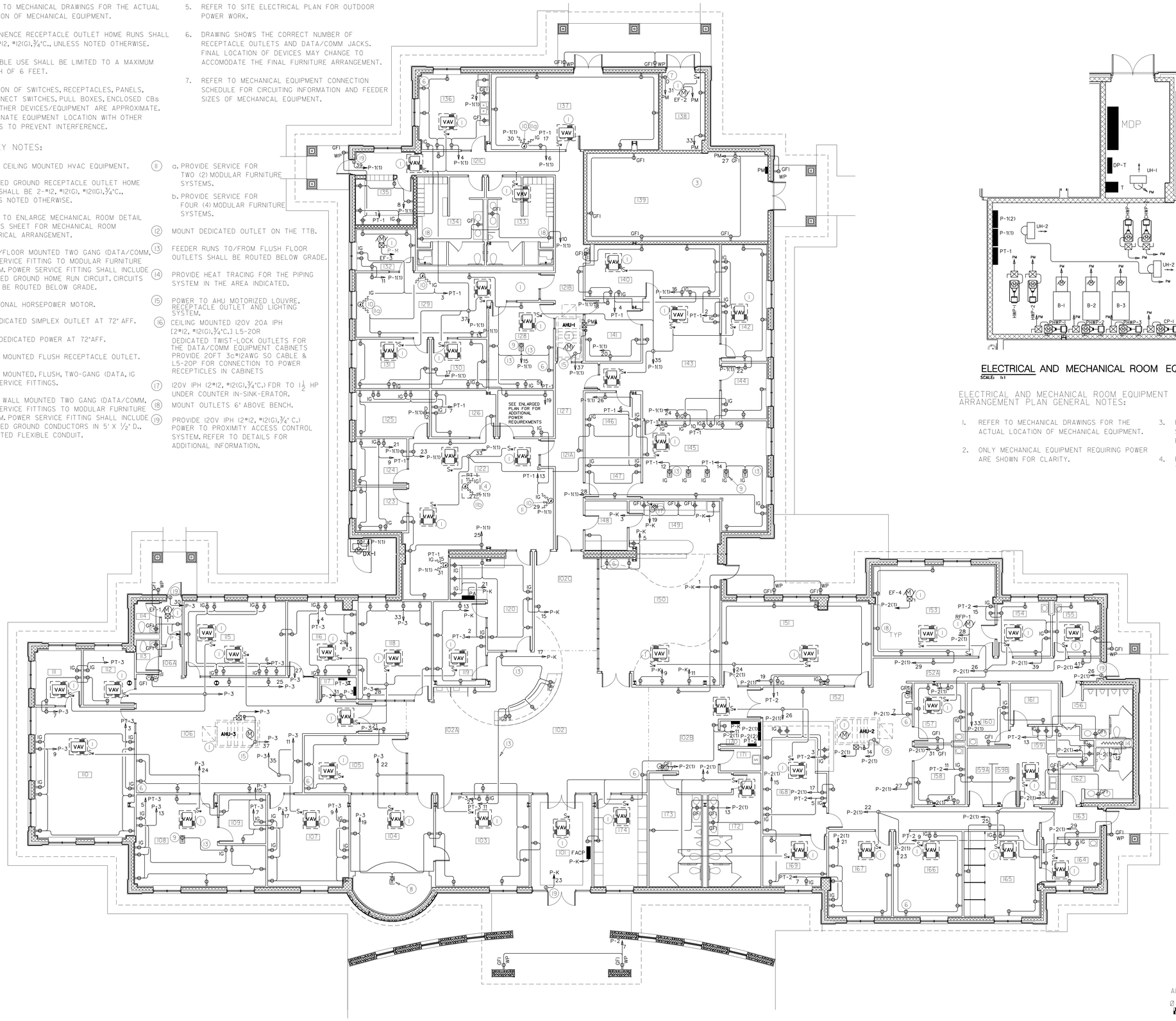

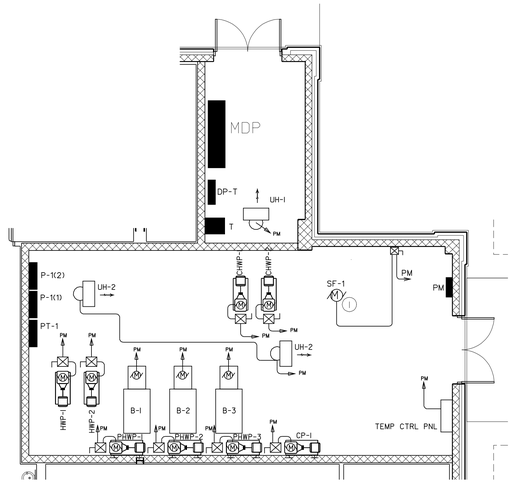

ELECTRICAL AND MECHANICAL ROOM EQUIPMENT ARRANGEMENT PLAN

SCALE: 1:1

ELECTRICAL AND MECHANICAL ROOM EQUIPMENT ARRANGEMENT PLAN GENERAL NOTES:

1. REFER TO MECHANICAL DRAWINGS FOR THE ACTUAL LOCATION OF MECHANICAL EQUIPMENT.
2. ONLY MECHANICAL EQUIPMENT REQUIRING POWER ARE SHOWN FOR CLARITY.
3. REFER TO MECHANICAL EQUIPMENT CONNECTION SCHEDULE FOR CIRCUITING INFORMATION AND FEEDER SIZES OF MECHANICAL EQUIPMENT.
4. PROVIDE WALL MOUNTED 45 KVA K-4 RATED TRANSFORMER.

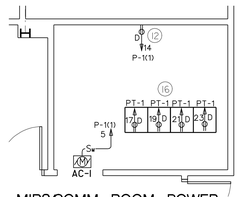

MIRSCOMM ROOM POWER EQUIPMENT ARRANGEMENT PLAN

NTS

ALL DIMENSIONS ARE GIVEN IN MILLIMETERS.

0 1 2 4 6 8 10M

SCALE 1 : 100

US Army Corps of Engineers
New York District

Symbol	Description	Date	Appr.

U.S. ARMY ENGINEER DISTRICT
CORPS OF ENGINEERS
NEW YORK, NEW YORK

Designed by: | Date: | Size: | Rev.:
Dwn by: | Ckd by: | Drawing file no.:
Reviewed by: | Drawing code:
Submitted by: | Plot date: 19-NOV-2004 16:06 | Approved: | Plot by: | Scale: 0.0000000000000
File name: S:\Mission\Military\Niagara Falls\FEB\MEP\Electrical\Plans\Electrical\E-02Power.dgn

PN 59873
MILITARY ENTRANCE PROCESSING STATION (MEPS)
NIAGARA FALLS, NY

POWER PLAN

Sheet reference number:
E–02

Plot Date: 19-NOV-2004 16:06
Plot By: AFBAKER@FEC01.USACE.ARMY.MIL
Submitted by: e3jetmwe
S:\Mission\Military\Niagara Falls\FEB\MEP\Electrical\Plans\Electrical\E-02Power.dgn

GENERAL NOTES:

1. HOME RUN CONDUCTORS FOR INDOOR LIGHTING SYSTEMS SHALL BE 2-#12, #12(G), ¾"C., UNLESS NOTED OTHERWISE.
2. CEILING MOUNTED LUMINAIRES SHALL BE COMPATIBLE THE TYPE OF CEILING SYSTEM IN THE AREA SERVED.
3. INDOOR FLOURESCENT LIGHTING FIXTURES PROVIDED WITH EMERGENCY INVERTER BALLAST(S) SHALL BE CONNECTED FOR SWITCHED OPERATION UNLESS NOTED OTHERWISE.
4. LIGHTING FIXTURE(S) DESIGNATED AS NIGHT-LITES (INCL LUMINAIRES WITH INVERTER BALLASTS) SHALL BE CONNECTED AHEAD OF THE SWITCH OF THE LIGHTING SYSTEM SERVING THE AREA/ROOM.
5. REFER TO ELECTRICAL SITE PLAN FOR OUTDOOR LIGHTING WORK.
6. ILLUMINATED EXIT SIGNS SHALL BE CONNECTED DIRECTLY TO A DEDICATED CIRCUIT IN THE NON-ISOLATED GROUND PANELS. REFER TO PANEL SCHEDULES FOR CIRCUIT LOCATIONS.

LIGHTING KEY NOTES:

1. PROVIDE DIMMING BALLAST(S) FOR THE LIGHTING SYSTEMS IN THE AREAS/ROOMS INDICATED.
2. PROVIDE TWO-LEVEL LIGHTING ILLUMINATION IN OFFICE AREAS/ROOMS INDICATED. MIDDLE LAMP/BALLAST SHALL BE SWITCHED SEPARATELY AND CONNECTED TO THE SWITCH FARTHEST FROM THE DOOR OPENING.
3. CONTRACTOR SHALL CALCULATE THE DISTANCE OF THE LUMINAIRE FROM THE IMAGE IN ACCORDANCE WITH THE MANUFACTURER'S INSTRUCTION.
4. OUTDOOR LIGHTING SYSTEM INDICATED SHALL BE CIRCUITED THROUGH AN ASTRONOMIC TIMER (WITH OVER-RIDE). TIMER SETTINGS SHALL BE IN ACCORDANCE THE CONTRACTING OFFICERS INSTRUCTION.
5. INDICATED OUTDOOR LIGHTING FIXTURES SHALL BE PROVIDED WITH EMERGENCY INVERTER BALLAST AND CONNECTED FOR SWITCHED (ASTRONOMIC TIMER) OPERATION.
6. MECHANICAL ROOM LIGHTING STSEM SHALL BE INSTALLED AFTER THE MECHANICAL EQUIPMENT (INCLUDING PIPING AND DUCTWORK) ARE INSTALLED.
7. CONNECT TYPE 'B1' LUMINAIRES WITH THE OUTER LAMPS OF THE TYPE 'B2' LUMINAIRES IN THE ROOM.

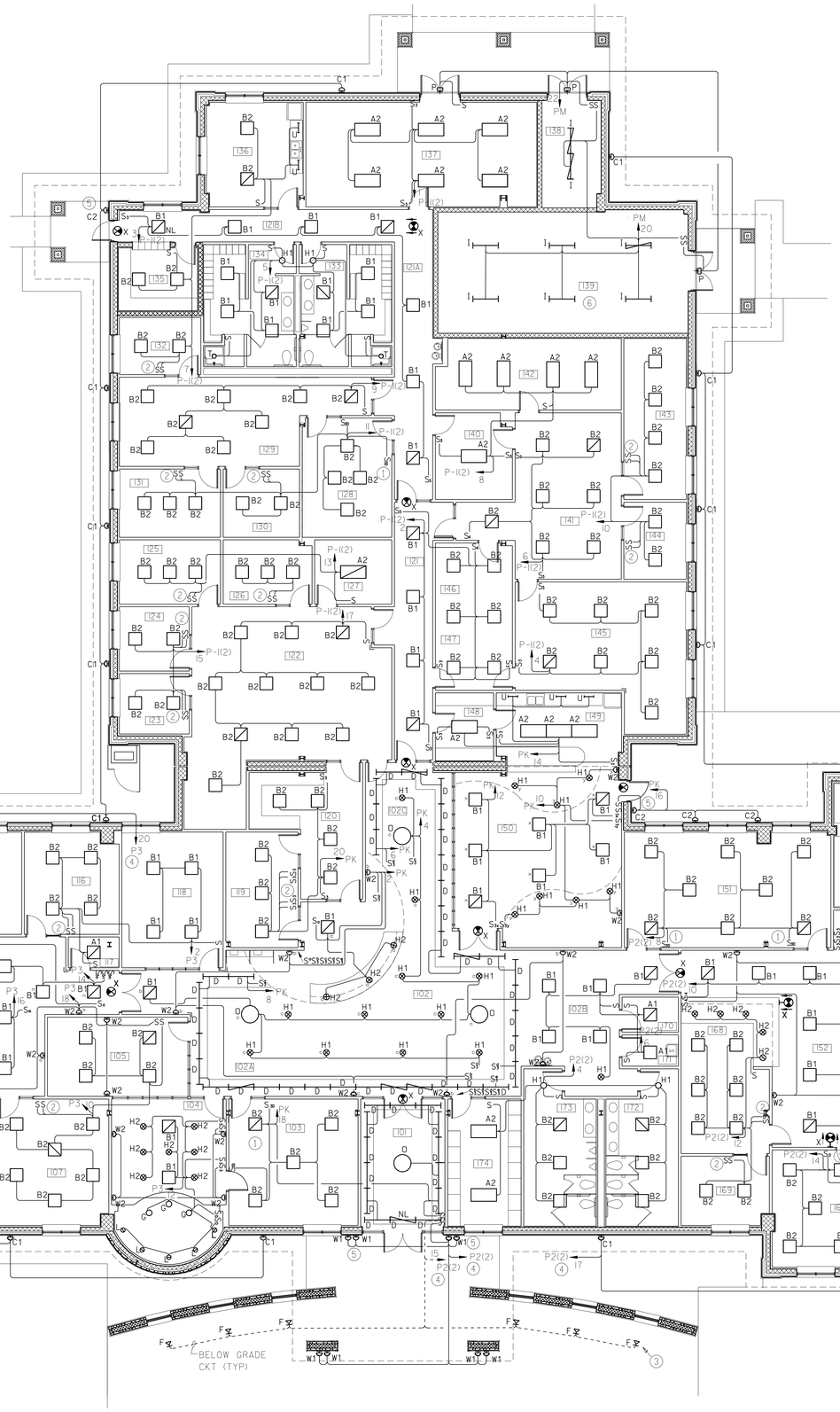

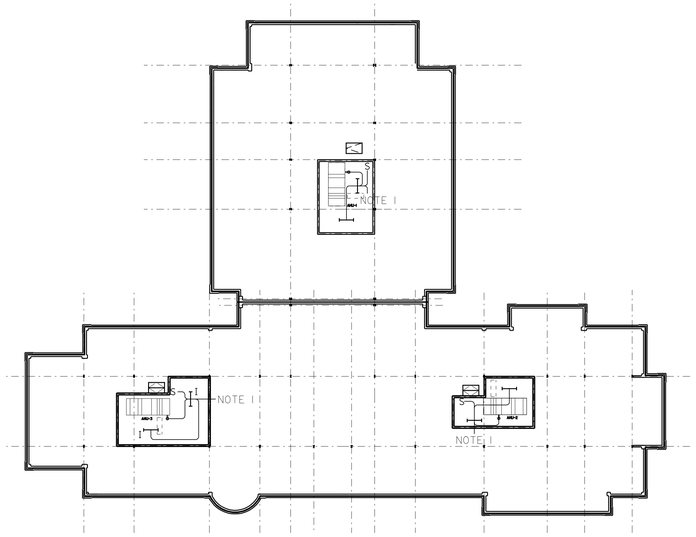

ABOVE CEILING MECHANICAL PLATFORM POWER AND LIGHTING PLAN.

NOTES:

1. UTILIZE RECEPTACLE OUTLET AND MOTORIZED DAMPER CIRCUIT SHOWN ON E-02 AND PANEL SCHEDULES.

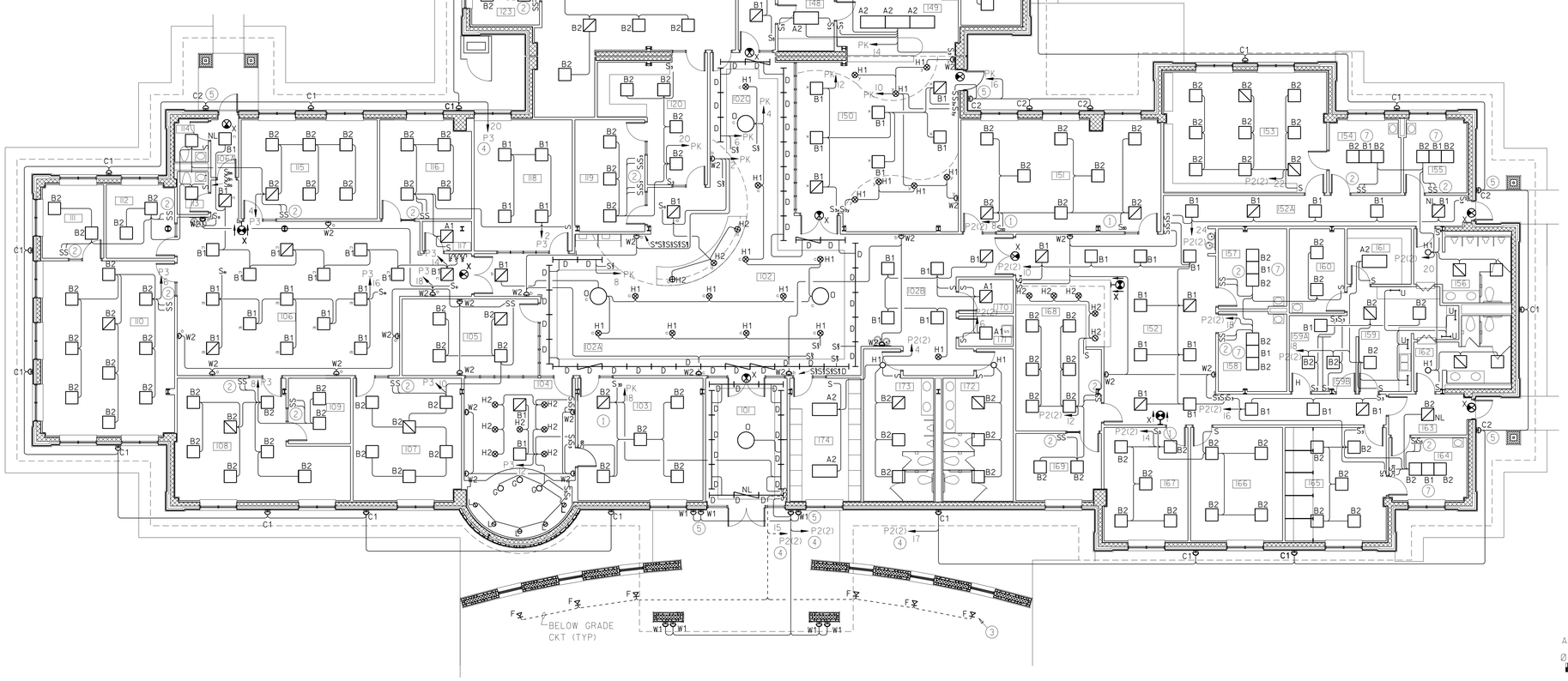

ALL DIMENSIONS ARE GIVEN IN MILLIMETERS.

0 1 2 4 6 8 10M

SCALE 1 : 100

US Army Corps of Engineers
New York District

Symbol	Description	Date	App.

U.S. ARMY ENGINEER DISTRICT
CORPS OF ENGINEERS
NEW YORK, NEW YORK

Designed by: | Date: | Size: | Rev.
Dwn by: | Ckd by: | Drawing file no.:
Reviewed by: | Drawing code:
Submitted by: | Plot date: 19-NOV-2004 16:06 | Plot by: eSterrwe | Scale: 0.0000000000

File name: S:\Services\Military\Niagara Falls\MEPS\Electrical\DWG's\Electrical\Elec\Elec-E-03L1p.dgn

MILITARY ENTRANCE PROCESSING STATION (MEPS)
PN 59873
NIAGARA FALLS, NY

LIGHTING PLAN

Sheet reference number:
E-03

Submitted by: eSterrwe
Sa=filter:domain=usace.army&user.id Fail: AE8AMEP:AE:Electrical:Elec:Elec:Elec

CABLE TRAY SYSTEM KEY NOTES:

1. EACH SECTION OF THE CABLE TRAY SHALL BE BONDED TOGETHER WITH A GROUNDING STRAP.
2. CABLE TRAY INSIDE THE MIRS/COMM ROOM SHALL BE INSTALLED 18" BELOW THE SUSPENDED CEILING.

GROUNDING SYSTEM KEY NOTES:

1. 6" X 24" X 1/4" COPPER GROUNDING BAR AT 18" AFF ON CERAMIC STAND-OFFS.
2. EACH SECTION OF THE CABLE TRAY SHALL BE BONDED TOGETHER WITH A GROUDING STRAP.
3. INCOMING WATER SERVICE SHALL BE BONDED ON THE STREET -SIDE OF THE SERVICE METER.
4. CABLE TRAY SHALL BE BONDED TO THE STRUCTURAL COLUMNS -SIDE OF THE SERVICE METER.
5. STEEL COLUMNS SHALL BE PROVIDED WITH A GROUNDING ROD OUTSIDE OF THE BUILDING FOOTPRINT.

DATA/COMM SYSTEM KEY NOTES:

1. 4-4" CONDUITS FROM EXISTING COMMUNICATIONS VAULT NORTH OF BUILDING 806. UTILIZE ONE OF FOUR 4" CONDUIT FOR INCOMING 200-PAIR TELEPHONE SERVICE CABLE.
2. TWO (2) 4' X 8' X 3/4" TREATED PLYWOOD COATED WITH (WHITE) FIRE RETARDANT ENAMEL PAINT.
3. FLOOR MOUNTED (FLUSH) DATA/COMM OUTLETS.
4. 24"W ALUMINUM DATA/COMM CABINETS SHALL BE MOUNTED AS SHOWN FROM THE SOUTH AND EAST WALLS (RESPECTIVELY).
5. DATA/COMM CABLE RUNS FROM THE RECEPTIONISTS DESK TO THE ABOVE CEILING CABLE TRAY SHALL BE ROUTED BELOW GRADE.
6. PAY PHONE JACKS AT 54" AFF.

PA SYSTEM KEY NOTES:

1. PUBLIC ADDRESS (PA)/MASS NOTIFICATION SYSTEM WALL MOUNTED HEAD-END EQUIPMENT.
2. PA/MASS NOTIFICATION SYSTEM STROBE LIGHT MOUNTED AT 7'-0" AFF UNLESS NOTED OTHERWISE.
3. CEILING MOUNTED PA/MASS NOTIFICATION SYSTEM SPEAKER.

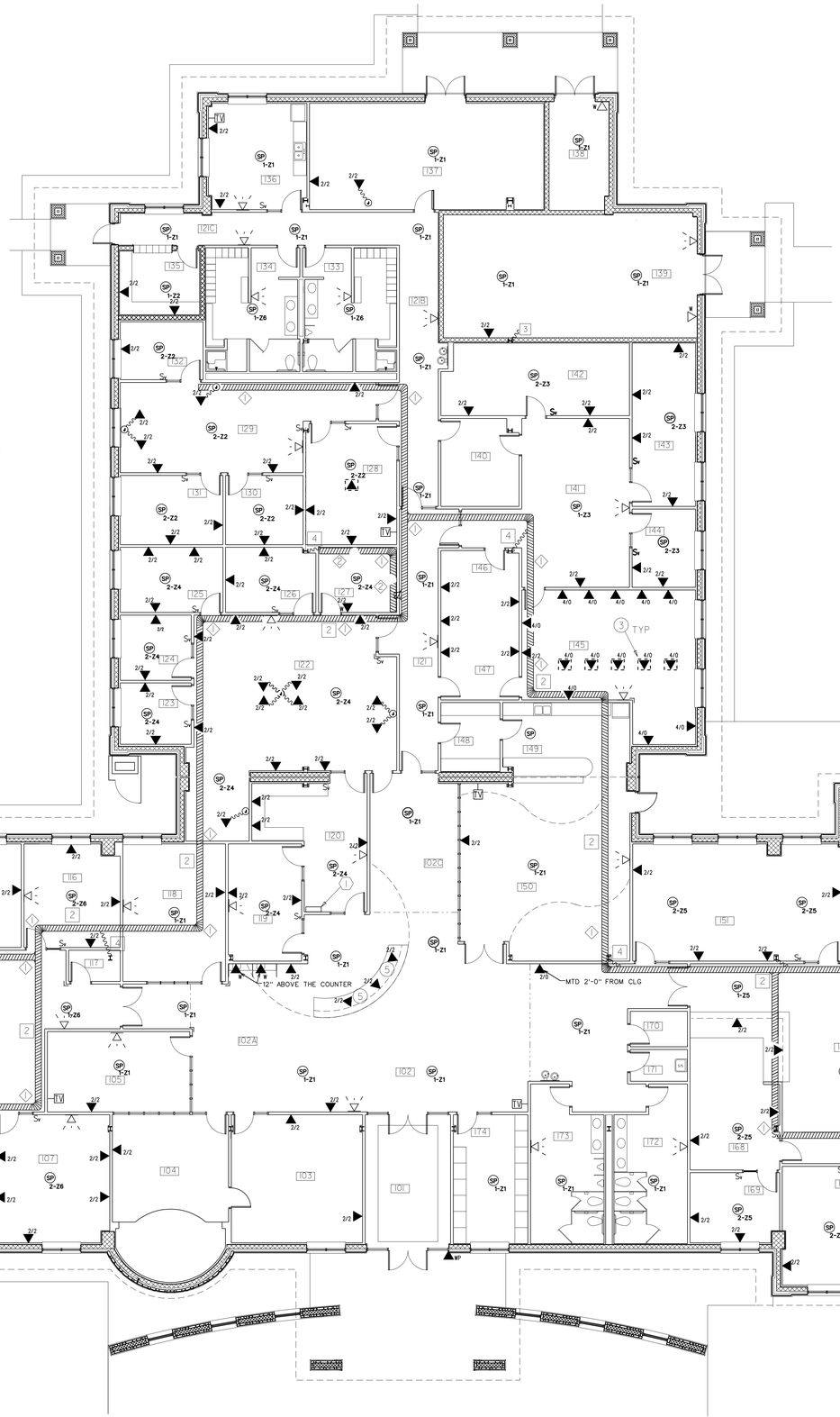

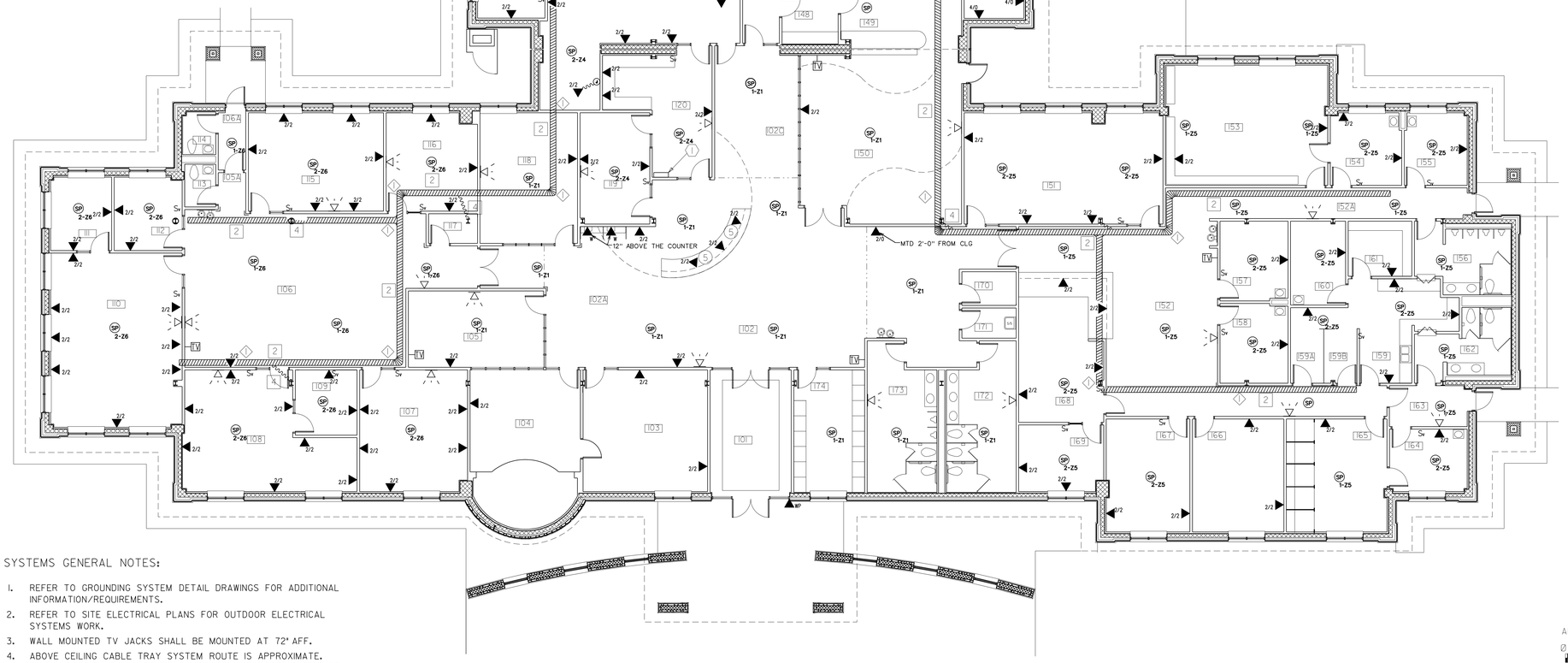

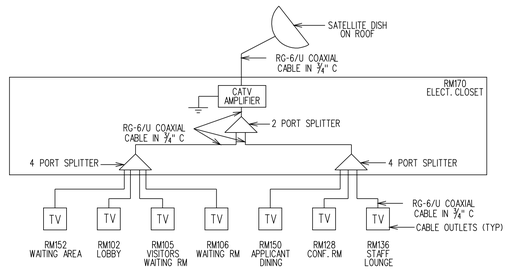

CATV SYSTEM RISER DIAGRAM

NTS

NOTES:
1. SATELLITE DISH, CATV AMPLIFIER, SPLITTERS ARE TO BE FURNISHED BY BASE COMM. GROUP AND INSTALLED BY ELECTRICAL CONTRACTOR.
2. COORDINATE WITH ARCHITECTURAL DRAWINGS FOR EXACT LOCATION AND MOUNTING OF SATELLITE DISH. PROVIDE CONDUIT SLEEVE FOR ROOF, WALL AND FLOOR PENETRATIONS; SEAL ALL PENETRATIONS TO MAINTAIN ITS FIRE RATING.

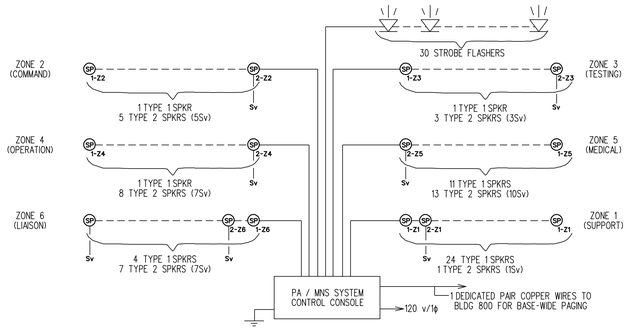

PA /MNS SYSTEM RISER DIAGRAM

NTS

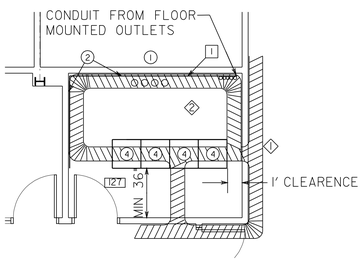

NOTE: REFER TO KEY NOTES FOR MIRS/COMM ROOM ARRANGEMENT PLAN KEY NOTES.

MIRS/COMM ROOM ARRANGEMENT PLAN

N.T.S.

SYSTEMS GENERAL NOTES:

1. REFER TO GROUNDING SYSTEM DETAIL DRAWINGS FOR ADDITIONAL INFORMATION/REQUIREMENTS.
2. REFER TO SITE ELECTRICAL PLANS FOR OUTDOOR ELECTRICAL SYSTEMS WORK.
3. WALL MOUNTED TV JACKS SHALL BE MOUNTED AT 72" AFF.
4. ABOVE CEILING CABLE TRAY SYSTEM ROUTE IS APPROXIMATE. FINAL LOCATION SHALL BE FIELD VERIFIED AND COORDINATED WITH DUCTWORK AND OTHER ABOVE CEILING MECHANICAL SYSTEMS.

ALL DIMENSIONS ARE GIVEN IN MILLIMETERS.

0 1 2 4 6 8 10M

SCALE 1 : 100

US Army Corps of Engineers
New York District

Symbol	Description	Date	Appr.

U.S. ARMY ENGINEER DISTRICT
CORPS OF ENGINEERS
NEW YORK, NEW YORK

Designed by: | Date: | Size: | Rev.
Dwn by: | Ckd by: | Drawing file no.:
Reviewed by: | Drawing code:
Submitted by: | Plot date: 19-NOV-2004 16:06 | Plot time: | Plot by: | Scale: 0.0000111000000

File name: S:\Benson\military\Niagara Fall AFB\MEPS\Electrical\Revit\Niagara-04sys.dgn

PN 59873
MILITARY ENTRANCE PROCESSING STATION (MEPS)
NIAGARA FALLS, NY

SYSTEMS PLAN

Sheet reference number:
E–04

Submitted by: eiletmee
S:#Interoom#military#Niagara Fall AFB#MEPS#Electrical#Revit#Niagara-04sys.dgn
Plot Date: 19-NOV-2004 16:06

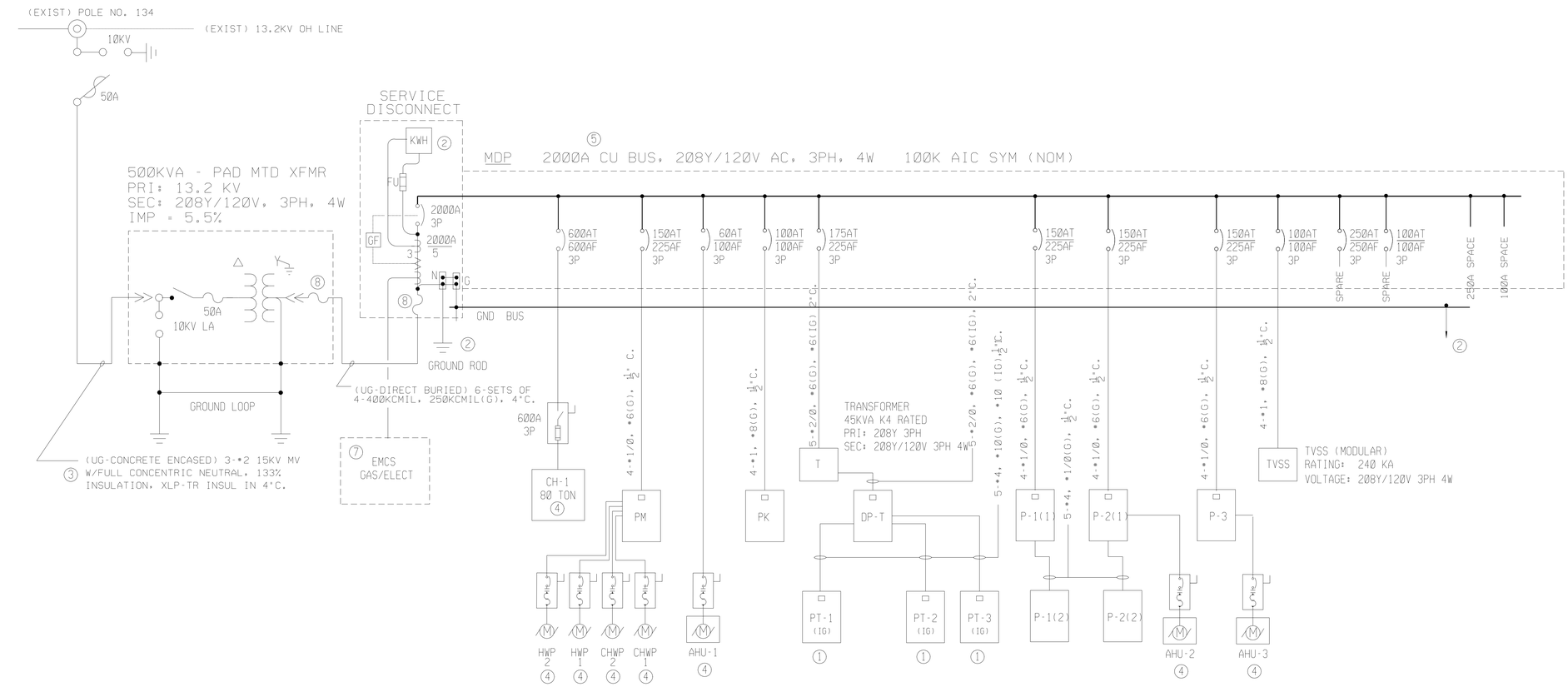

1 E1 E5 SINGLE LINE DIAGRAM
N.T.S.

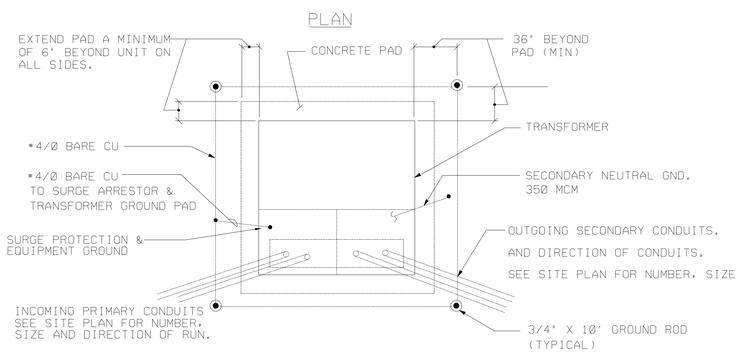

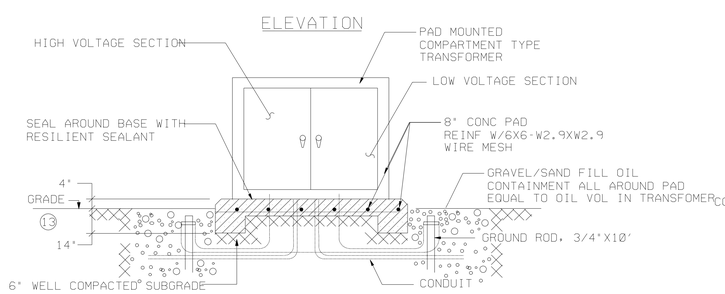

2 E1 E5 TRANSFORMER MOUNTING DETAIL
N.T.S.

GENERAL NOTES:

1. REFER TO MECHANICAL EQUIPMENT CONNECTION FOR FEEDER SIZES TO MECHANICAL EQUIPMENT.
2. REFER TO GROUNDING SYSTEM SCHEMATIC DIAGRAM FOR ADDITIONAL GROUNDING INFORMATION AND REQUIREMENTS.
3. REFER TO PANEL SCHEDULES FOR THE CIRCUIT LOCATION OF LOADS SHOWN.
4. COMPUTER LOADS SHALL BE CONNECTED TO THE PANEL(S) SUPPORTED BY THE 'K' RATED TRANSFORMER.

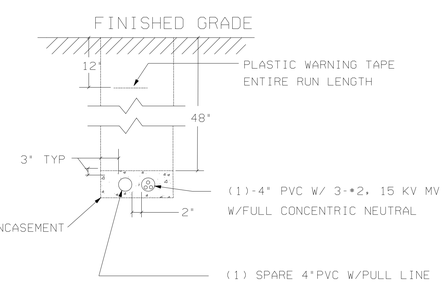

3 E1 E5 MEDIUM VOLTAGE DUCT
N.T.S.

KEY NOTES:

1. ISOLATED GROUND BUS FROM PANELBOARDS SUPPORTED BY THE 'K' RATED TRANSFORMERS SHALL BE CONNECTED DIRECTLY TO THE GROUND BUS OF THE ELECTRICAL SERVICE SWITCHBOARD.
2. SWITCHBOARD GROUND BUS SHALL BE PROVIDED WITH A GROUND ROD, BE BONDED TO THE 'STREET SIDE' OF THE INCOMING WATER SERVICE METER, AND BE BONDED TO THE NEAREST BUILDING STEEL COLUMN PROVIDED WITH A GROUND ROD.
3. UNDERGROUND MEDIUM AND LOW VOLTAGE SERVICE DUCTS/RACEWAYS SHALL BE PROVIDED WITH MATCHING SPARE DUCT(S) WITH PULL STRINGS. SPARE DUCT(S) SHALL BE CAPPED AT THE ENDS, INCLUDING IN THE HANDHOLES.
4. MOTOR STATER PROVIDED WITH HVAC EQUIPMENT.
5. SWITCHBOARD SHALL BE PROVIDED WITH A NON-TAPERED COPPER BUS.
6. FIRE ALARM DISCONNECT SWITCH (INCLUDING RACEWAY TO MDP PANEL AND FACP) SHALL BE PAINTED WITH RED ENAMEL PAINT.
7. REFER TO ELECTRIC AND GAS METERING BLOCK DIAGRAM ON M-704 FOR ADDITIONAL INFORMATION.
8. SECONDARY CABLES SHALL BE PROVIDED WITH LIMITERS AT THE LOW VOLTAGE SECTION OF THE OUTDOOR SERVICE TRANSFORMET AND AT THE SERVICE DISCONNECT SECTION OF THE SERVICE SWITCHBOARD IN THE ELECTRICAL ROOM.

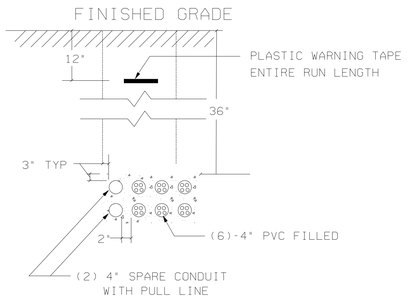

4 EX E5 LOW VOLTAGE DUCTS
N.T.S.

US Army Corps of Engineers
New York District

Symbol	Description	Date	Appr.

U.S. ARMY ENGINEER DISTRICT
CORPS OF ENGINEERS
NEW YORK, NEW YORK

Designed by: | Date: | Size: | Rev.:
Dwn by: | Ckd by: | Drawing file no.:
Reviewed by: | Drawing code:
Submitted by: | Plot date: 19-NOV-2004 16:07 | Plot by: admmcw | Scale: 0.000000000000

File name: S:\Missions\military\Niagara Falls\FUSRP\Design\AFRC+LS\Admin\Drawings\E-05\PwrDist1.dgn

MILITARY ENTRANCE PROCESSING STATION (MEPS)
NIAGARA FALLS, NY

SINGLE LINE DIAGRAM ELECTRICAL DETAILS

Sheet reference number:
E–05

Plot Date: 19-NOV-2004 16:07
Submitted by: admmcw
S:\Office\Admin\Projects\Niagara Fall AFRB\MEP\Electric\dgn\MS\Submits\MEPS\Submits\PwrDistE-05PwrDist1.dgn

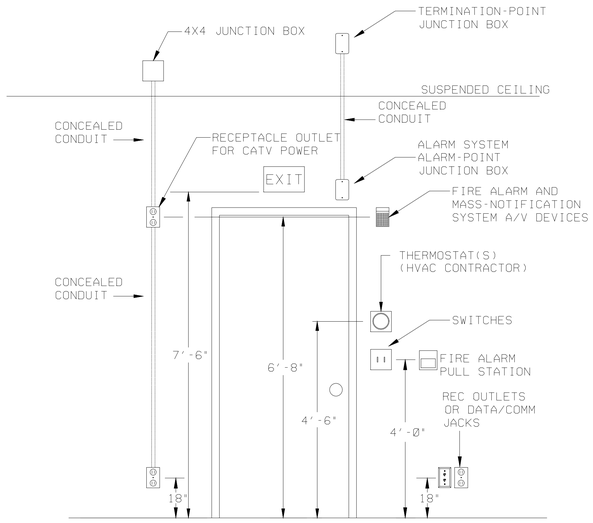

1 E2 E6 DEVICES TYPICAL MOUNTING HEIGHTS

N.T.S.

NOTES:

1. DEVICES/EQUIPMENT SHOWN ARE DEVICES USED IN A TYPICAL PROJECT. SOME DEVICES MAY NOT BE APPLICABLE FOR THIS PROJECT. REFER TO PLAN DRAWINGS FOR ITS APPLICABILITY FOR THIS PROJECT.

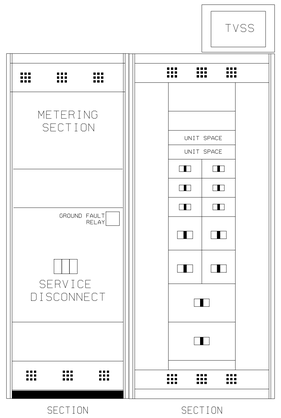

NOTE: DRAWING SHOWN IS A TYPICAL SWITCHBOARD. CONFIGURATION VARIES FROM OTHER MANUFACTURERS AND MAY BE ACCEPTABLE.

1 E2 E6 SERVICE SWITCHBOARD ELEVATION

N.T.S.

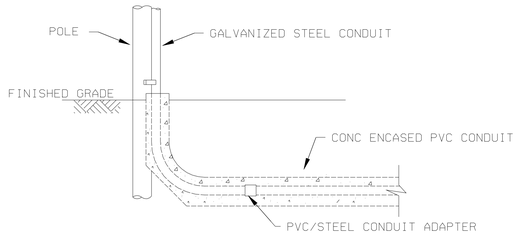

NOTE:

THIS DETAIL IS TYPICAL FOR ALL CONDUIT TERMINATIONS AT THE RISER POLE.

3 E1 E6 CONVERSION FROM PVC TO STEEL CONDUIT DETAIL

N.T.S.

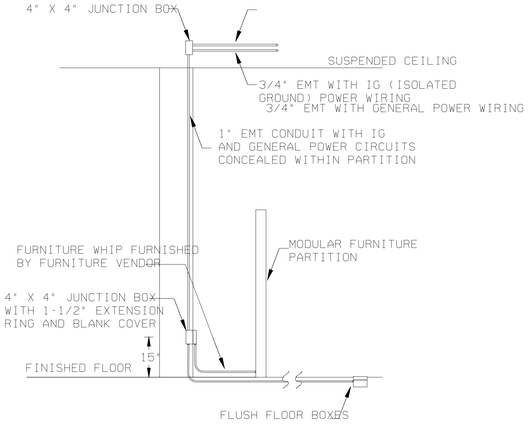

7 E2 E6 MODULAR FURNITURE POWER CONNECTION DETAIL

N.T.S.

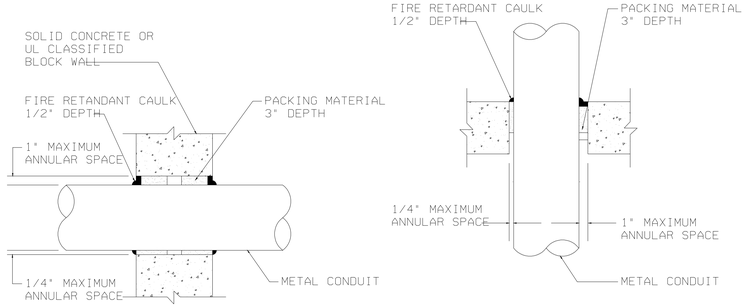

9 E2 E6 THRU-WALL CONDUIT PENETRATION DETAIL

N.T.S.

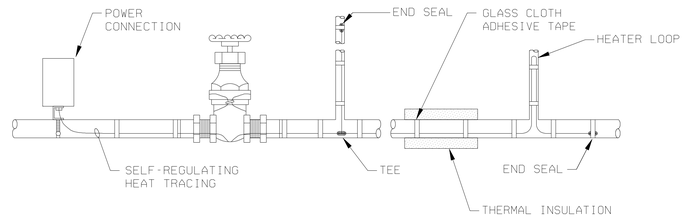

1 E2 E6 TYPICAL HEAT TRACE SYSTEM

N.T.S.

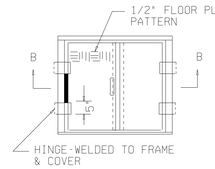

PLAN OF COVER

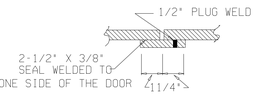

SEAL DETAIL

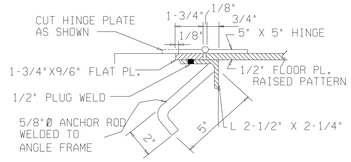

SECTION OF FRAME

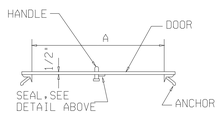

SECTION B-B

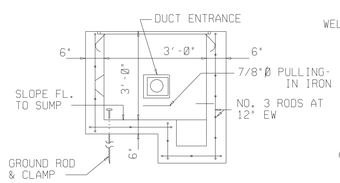

SECTION A-A

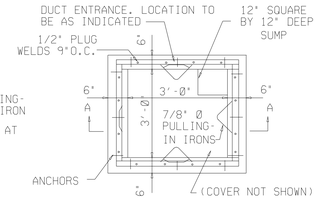

PLAN

8 E1 E6 TELEPHONE/POWER (NON-TRAFFIC) HANDHOLE

N.T.S.

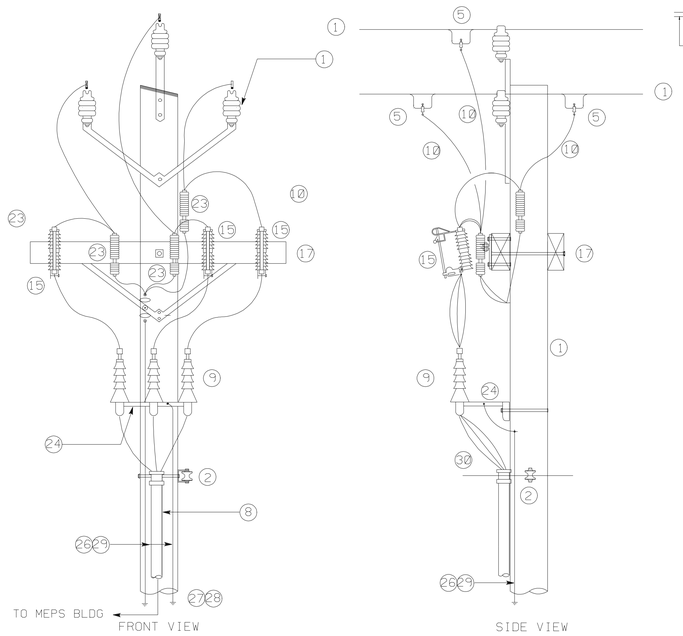

5 E1 E6 RISER POLE NO. 134 DETAIL

N.T.S.

SCHEDULE OF POLE EQUIPMENT	
NO.	DESCRIPTION
1	(EXISTING) MV OVHD LINE/POLE
2	(EXISTING) SECONDARY CLEVIS WITH SPOOL INSULATOR
5	STIRRUP, COMPRESSION TYPE AND HOT LINE CLAMP
8	RIGID CONDUIT, 10FT (NOM), FROM PVC/RIGID CONVERSION. REFER TO DETAIL 3/E06.
9	1/C TERMINATION, 15/25 KV
10	PRIMARY CONDUCTOR
15	FUSED CUT OUT 15/25 KV
17	LOWER CROSS ARMS
23	LIGHTNING ARRESTOR 9KV METAL OXIDE DISTRIBUTION CLASS
24	POTHEAD TRI-MOUNTING BRACKET
26	NO. 4 SOLID COPPER
27	GROUND ROD
28	GROUND ROD CLAMP
29	HALF ROUND WOOD, PLASTIC OR FIBER MOLDING
30	WEATHER HEAD (NOT SHOWN)

NOTES:

1. EQUIPMENT SHOWN ARE NEW UNLESS NOTED OTHERWISE.
2. SCHEDULE SHOWN LISTS THE MAJOR ITEMS/EQUIPMENT ONLY. INCEDENTAL ITEMS AND OTHER EQUIPMENT NECESSARY FOR A COMPLETE INSTALLATION SHALL BE PROVIDED AT NO ADDITIONAL COST TO THE GOVERNMENT.
3. RISER CONDUIT (NO. 8) SHALL BE RIGID STEEL CONDUIT UP TO 10 FEET ABOVE GROUND LEVEL.
4. TOP END OF RISER CONDUIT SHALL BE PACKED WITH FIRE RETARDANT INSULATION UPON COMPLETION OF CONDUCTOR INSTALLATION.

US Army Corps of Engineers New York District

Symbol	Description	Date	Appr.

Rev.	Size	Date:	Designed by:	Dwn by:	Ckd by:	Reviewed by:	Submitted by:	Drawing file no.:	Drawing code:	Print date: 19-NOV-2004 16:07 Plot by: eijlmewe Plot Scale: 0.0000000000000

U.S. ARMY ENGINEER DISTRICT
CORPS OF ENGINEERS
NEW YORK, NEW YORK

File name: S:\Services\military\Niagara Falls\AFRB\MEPS\Electrical\Dwgs\Electrical\Dwgs\E-06Revised.dgn

PN 58673
MILITARY ENTRANCE PROCESSING STATION (MEPS)
NIAGARA FALLS, NY

ELECTRICAL DETAILS

Sheet reference number:

E–06

Plot Date: 19-NOV-2004 16:07
Submitted by: eijlmewe
Satterfield&Pontikes Fail AFRB\MEPS\Electrical\Dwgs\E-06Revised.dgn

TYPE: 'A1' 'A2'

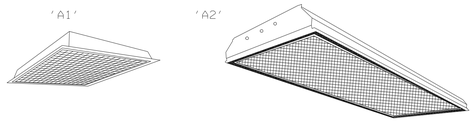

GENERAL: SPECIFICATION GRADE ACRYLIC FLUORESCENT LUMINAIRE

HOUSING: RECESSED DIE-FORMED MINIMUM 20 GAUGE COLD-ROLLED STEEL.

FINISH: BAKED WHITE ENAMEL, MINIMUM REFLECTANCE 85% ON IRON PHOSPHATE BASE.

REFLECTOR: HIGH REFLECTANCE GLOSS WHITE

NOM DIMENSIONS: A1 - 24" L X 24" W X 6" D
A2 - 24" L X 48" W X 6" D

BALLAST: 120V - ELECTRONIC BALLAST, CERTIFIED 'A' SOUND RATING, U.L. LISTED.

LAMPS: A1 - (2) 31 WATT U6T8, 75CRI, RAPID START, COOL WHITE.
A2 - (3) 32 WATT T8, 75CRI, RAPID START, COOL WHITE.

RECESSED PRISMATIC TROFFER
N.T.S.

TYPE: 'B1'/'B2'

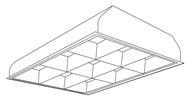

GENERAL: PARABOLIC REFLECTOR LOUVERED FLUORESCENT LUMINAIRE

HOUSING: RECESSED DIE-FORMED MINIMUM 20 GAUGE COLD-ROLLED STEEL.

FINISH: BAKED WHITE ENAMEL, MINIMUM REFLECTANCE 85% ON IRON PHOSPHATE BASE.

REFLECTOR: HIGH REFLECTANCE GLOSS WHITE

NOM DIMENSIONS: B1/B2 - 24" L X 24" W X 6" D

BALLAST: 120V - ELECTRONIC BALLAST, CERTIFIED 'A' SOUND RATING, U.L. LISTED.

LAMPS: B1 - (2L) 31 WATT U6T8, 75CRI, RAPID START, COOL WHITE
B2 - (3L) 31 WATT U6T8, 75CRI, RAPID START, COOL WHITE.

RECESSED PARABOLIC TROFFER
N.T.S.

TYPE: 'W1'

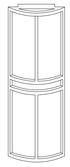

FEATURES
LAMP TYPE: CF26Q/RS
PROFILE: 2 LAMP
SHIELDING: WHITE ACRYLIC
BALLAST: HIGH POWER FACTOR, ELECTRONIC -20 DEGREES C STARTING TEMP. PROVIDE EMER INVERTER BALLASTS WHERE INDICATED.

NOM. DIMENSIONS: 9"W X 6"D X 20"H

GENERAL DESCRIPTION
HOUSING: SOLID ALUMINUM BAR STOCK

ELECTRICAL: 120 VOLT BALLAST

FINISH: PAINTED - DARK BROWN

LOCATION: OUTDOOR/WET

WALL MOUNTED OUTDOOR LUMINAIRE
N.T.S.

TYPE: 'H1'

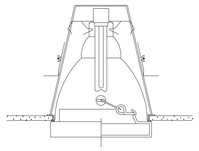

FEATURES
LAMP TYPE: CFTT26W/RS
PROFILE: 1 - LAMP
SHIELDING: PRISMATIC ACRYLIC

BALLAST: HIGH POWER FACTOR MAGNETIC, DIMMING (WHEN INDICATED)

NOM. DIMENSIONS 6" DIA X 9" D

GENERAL DESCRIPTION
HOUSING: DIE-CAST ALUMINUM

REFLECTORS: ALZAK, MEDIUM-BEAM SELF-FLANGE

ELECTRICAL: 120 VOLT BALLAST

FINISH: CLEAR, SEMI-SPECULAR LOW IRIDESCENT CONE

EFFICIENCY: 35%

6" DIA. RECESSED COMPACT FLUORESCENT DOWNLIGHT
N.T.S.

TYPE: 'H2'

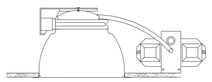

FEATURES
LAMP TYPE: CFQ26W
PROFILE: 2 LAMP - 26W
BALLAST: ELECTRONIC

GENERAL DESCRIPTION
HOUSING: DIE CAST ALUMINUM WITH UNIVERSAL MOUNTING BRACKETS

REFLECTORS: ONE-PIECE ALZAK SEMI-SPECULAR, LOW IRIDESCENT W/ BLSCK CROSS BAFFLE

ELECTRICAL: 120 VOLT BALLAST

EFFICIENCY: 70%

OTHER: COLD WEATHER BALLAST(S) AND DAMP LOCATION LISTING FOR OUTSIDE USE WHEN USED OUTDOOR.

NOM. DIMENSIONS: 8" DIA. X 9" D.

8" DIA. CROSS BAFFLE FLUORESCENT DOWNLIGHT
N.T.S.

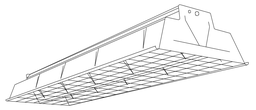

GENERAL: PENDANT MOUNTED INDUSTRIAL FLUORESCENT LUMINAIRE WITH DEEP CENTER 'V' GROOVE.

HOUSING: DIE FORMED MINIMUM 20 GAUGE COLD ROLLED STEEL.

FINISH: ELECTROSTATICALLY APPLIED, WHITE POLYESTER POWDER ENAMEL FINISH OVER IRON PHOSPHATE PRETREATMENT ON ALL PARTS EXCEPT PORCELAINIZED REFLECTOR.

REFLECTOR: PARABOLIC SHAPED, DEEP DIE EMBOSSED WITH INTEGRAL ALIGNERS AND CHANNEL CONNECTOR SECURED BY QUARTER TURN LATCHES. FINISHED WITH BAKED ON WHITE PORCELAINIZED ENAMEL.

BALLAST: A SOUND RATED, LOW TEMPERATURE BALLAST.

LAMPS: (2)32 WATT, T8, RAPID START, COOL WHITE FLUORESCENT, HIGH POWER FACTOR, RAPID START, CLASS P, CBM CERTIFIED.

GUARD: WIRE MESH GUARD.

LUMINAIRE TYPE "I"
N.T.S.

TYPE: 'L'

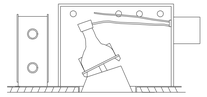

FEATURES
LAMP TYPE: 75W MR16
PROFILE: 1 LAMP
SHIELDING: CLEAR GLASS
REFLECTORS: SELF-FLANGE, SEMI-SPECULAR Ø-30 DEG. TAPERED CONE

DIMENSIONS (NOM): (3"DIA. X 9" D)

GENERAL DESCRIPTION
HOUSING: DRAWN STEEL HOUSING MOUNTED TO DIE-FORMED MOUNTING PAN

ELECTRICAL: 120/12 VOLT MAGNETIC TRANSFORMER

3" DIA. RECESSED LOW VOLTAGE INCANDESCENT ADJUSTABLE ACCENT
N.T.S.

TYPE: 'O'

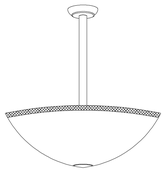

FEATURES
LAMPS: 4L
LAMP(S): 26W
BALLAST: ELECTRONIC
BOWL SIZE: 36" DIA.

GENERAL DESCRIPTION
HOUSING: WHITE OPAL ACRYLIC BOWL, SEAMLESS ALUMINUM TRIM RING

SHIELDING: OPAL ACRYLIC BOWL

MOUNTING: STEM WITH SWIVEL CANOPY

REFLECTORS: FABRICATED ALUMINUM SPECULAR REFLECTOR

ELECTRICAL: 120 VOLT BALLAST

FINISH: POLISHED ALUMINUM TRIM RING, STEM AND CANOPY FINISH TO MATCH

STEM MOUNTED DIRECT/INDIRECT COMPACT FLUORESCENT BOWL
N.T.S.

TYPE: 'P'

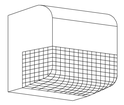

FEATURES
LAMP TYPE: 50W HPS
PROFILE: 1 LAMP
SHIELDING: GASKETED CLEAR PRISMATIC LENS
BALLAST: HIGH POWER FACTOR TYPE (≥.85).

GENERAL DESCRIPTION
HOUSING: RUGGED DIE-CAST ALUMINUM

MOUNTING: FLAT/BACK OVER DOORWAY OPENINGS

LENS: GASKETED, ONE-PIECE, INJECTION MOLDED, POLYCARBONATE, WITH PRISM PATTERM.

REFLECTORS: ONE-PIECE ALUMINUM

ELECTRICAL: 120 VOLTS

FINISH: DARK BRONZE POLYESTER POWDER, ELECTROSTATICALLY APPLIED.

NOM DIM: 10"H X 11"W X 8"D

LISTING: UL LISTED FOR WET LOCATION

LOW CUT-OFF MINI WALL PACK
N.T.S.

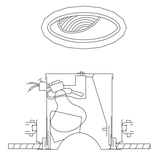

TYPE 'G' LUMINAIRE REQUIREMENTS:

1. Ø.032" MINIMUM THICKNESS STEEL HOUSING WITH MATTE BLACK FINISH.
2. PROVIDE LOW-GLOSS WHITE ENAMEL TRIM RING WITH 12" DIA. (MAX)
3. SPECULAR ALUMINUM REFLECTOR.
4. Ø° - 30° ADJUSTABLE SOCKET ASSEMBLY WITH 358° ROTATION.
5. PROVIDE TRIM SUITABLE FOR RECESS MOUNTING OF LUMINAIRE IN CEILING MATERIAL SPECIFIED.
6. PROVIDE PORCELAIN SOCKET WITH FULL METAL SCREW SHELL SUITABLE FOR 100W PAR 38 LAMP.
7. PROVIDE INTERNAL PROVISIONS FOR GROUNDING.

ADJUSTABLE INCANDESCENT INTERIOR 6" DIA. SPOTLIGHT
N.T.S.

8" DIA. +/- 1"

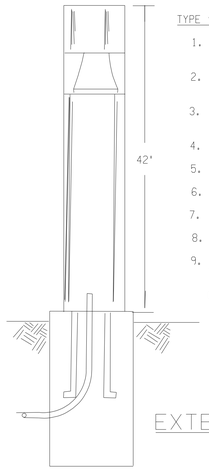

TYPE 'R' LUMINAIRE REQUIREMENTS

1. COLUMN, EXTRUDED ALUMINUM (MINIMUM .148" THICK WALL) WITH MEDIUM BRONZE ANODIZED FINISH.
2. COMPLETELY GASKETED WEATHERPROOF TOP LAMP ACCESSORY PLATE.
3. EXTRUDED CLEAR ACRYLIC MINIMUM .188" THICK WALL ENCLOSURE.
4. SEGMENTED SPECULAR CLEAR ALZAK REFLECTOR.
5. CLEAR ALZAK REFLECTING CONE.
6. HIGH POWER FACTOR BALLAST.
7. U.L. LISTED FOR WET LOCATIONS.
8. 70 WATT HIGH PRESSURE SODIUM LAMP.
9. ANCHOR BOLT KIT PER MANUFACTURER, BUT NOT LESS THAN TWO 1/2" Ø X 9" LONG ANCHOR BOLTS WITH 1-1/2" 'L' BEND SET IN 12" Ø X 24" DEEP CONCRETE BASE. TOP OF BASE 2" ABOVE GRADE.

EXTERIOR BOLLARD LUMINAIRE
N.T.S.

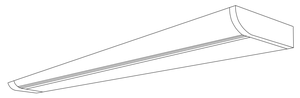

LUMINAIRE REQUIREMENTS

1. LENS - CATADIOPTRIC.
2. REFLECTOR - INTERNAL SILVER SPECULAR INTERVAL REFLECTORS.
3. FINISH - BAKED ENAMEL WHITE FINISH.
4. LAMP(S) - ONE (1) 24" 17WT8 FLUORESCENT.
5. BALLAST - 120V ELECTRONIC.
6. OPTION - ON/OFF ROCKER SWITCH.

NOTE: I.E.S. TYPE DISTRIBUTION AS SPECIFIED IN LIGHTING FIXTURE SCHEDULE OR ON PLANS.

UNDERCABINET TYPE U' LUMINAIRE
N.T.S.

US Army Corps of Engineers
New York District

Symbol	Description	Date	App.

Size:	Rev:
Date:	
Drawing file no:	
Drawing code:	
Plot date: 19-NOV-2004 16:07	
Plot by: s-f0fffff0000	
File: s:\f0fffff0000\	

Designed by:
Dwn by: Ckd by:
Reviewed by:
Submitted by:

U.S. ARMY ENGINEER DISTRICT
CORPS OF ENGINEERS
NEW YORK, NEW YORK

PN 58973
MILITARY ENTRANCE PROCESSING STATION (MEPS)
NIAGARA FALLS, NY

LIGHTING DETAILS

Sheet reference number:
E-07

Plot Date: 19-NOV-2004 16:07
Submitted by: a3lehmee
Sheet:c:\cadwin\libraries\PN\Figure 6 Full AF\PN\AF\Electric\Lighting\Details\E-07L\Lgh01.dgn

TYPE: 'W2'

FEATURES

LAMP TYPE: CFQ13W/RS
PROFILE: 2 - LAMP
SHIELDING: MATTE WHITE ACRYLIC
BALLAST: ELECTRONIC (NON-DIMMING)

GENERAL DESCRIPTION

HOUSING: 20 GAUGE COLD ROLLED STEEL BACK PAN, PAINTED HIGHLY REFLECTIVE WHITE

ELECTRICAL: 120 VOLT BALLAST

FINISH: CAST RESIN

DIM (NOM): 7' W X 11' H X 4' D

WALL MOUNTED COMPACT FLUORESCENT SCONCE, ADA COMPLIANT

N.T.S.

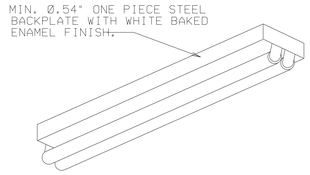

STRIP LUMINAIRE REQUIREMENTS

1. 2 - 32W, T-8, RS, CW ENERGY SAVING FLUORESCENT LAMP.
2. MOUNT BACKPLATE WITH 6-SCREWS (MIN) OR ANCHORS PER FIXTURE TO WALL OR CEILING.
3. PROVIDE INTERNAL GROUNDING SCREW.
4. BALLAST SHALL BE HIGH POWER FACTOR ≥(9) ETL, CBM APPROVED RAPID START CLASS P, WITH SOUND RATING OF 'A'.
5. PROVIDE LOW PROFILE LUMINARE. MAX DIM: 4' X 3'W X 3'D.

TYPE 'D' LUMINAIRE

N.T.S.

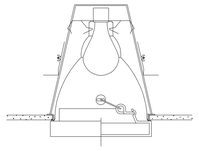

TYPE: 'T'

FEATURES

LAMP TYPE: 60W A19
PROFILE: 1 LAMP
SHIELDING: OPAL POLYCARBONATE DROP DIFFUSER
BALLAST: NONE

GENERAL DESCRIPTION

HOUSING: DIE-FORMED 20 GA. GALVANIZED STEEL MOUNTING PAN: UNIVERSAL MOUNTING BRACKETS, CONTINUOUS NEOPRENE GASKET ON FLANGE OF REFLECTOR

REFLECTORS: SEMI-SPECULAR HYDRO-FORMED 1 MM (0.04') THICK ALUMINUM: WHITE TRIM RING

ELECTRICAL: 120 VOLT

LOCATION: WET/SHOWER STALL

6" DIA. RECESSED INCANDESCENT DROPPED OPAL SHOWERLIGHT

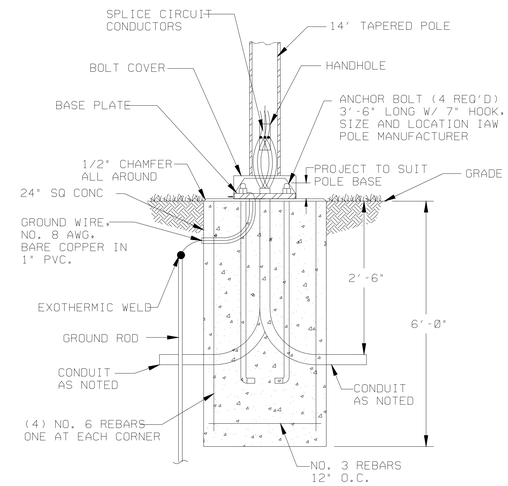

PEDESTRIAN POLE MOUNTING DETAIL

N.T.S.

TYPE: 'Q'

FEATURES

LAMP TYPE: 150W HPS
PROFILE: 1 LAMP
SHIELDING: CLEAR TEMPERED GLASS
BALLAST: HIGH POWER FACTOR, CORE & COIL, CWA
NOM. DIMENSIONS: 20" DIA. X 20" H

GENERAL DESCRIPTION

HOUSING: ONE PIECE HEAVY GAUGE SPUN ALUMINUM WITH NO VISIBLE SEAMS OR WELD BEADS WITH SOLID TOP

MOUNTING: YOKE/POLE MOUNTED, 4.27 M (14' TOP OF LUMINAIRE) MAX

REFLECTORS: SEGMENTED HIGHLY REFLECTIVE SPECULAR ALUMINUM

ELECTRICAL: 120 VOLT BALLAST

FINISH: PAINTED BRONZE FINISH

LOW HEIGHT METAL HALIDE PEDESTRIAN POLE

N.T.S.

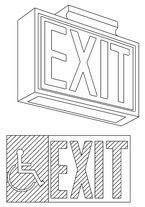

TYPE 'X' LED LUMINAIRE REQUIREMENTS

1. LETTERS SHALL BE 6" TALL WITH 3/4" STROKES FORMED BY A STENCIL FACE.
2. PROVIDE GREEN FIBERGLASS PANEL BEHIND STENCIL FACE.
3. PROVIDE 90-MINUTE DC POWER BACK-UP.
4. PROVIDE ILLUMINATED ARROWS AS INDICATED ON THE DRAWINGS.
5. PROVIDE SINGLE OR DOUBLE FACE AS INDICATED ON DRAWINGS.
6. PROVIDE CEILING, END WALL, BACK WALL OR PENDANT MOUNTING AS INDICATED ON DRAWINGS.
7. UNITS MOUNTED EXPOSED TO THE ENVIRONMENT SHALL HAVE A DAMP OR WET U.L. LABEL AS APPROPRIATE AND SHALL NOT BE CONSTRUCTED OF STEEL.
8. PROVIDE INTERNAL PROVISIONS FOR GROUNDING.
9. PROVIDE INTERNATIONAL SYMBOL OF ACCESS ON SIGN, ACCORDINGLY.

ILLUMINATED EXIT SIGN

N.T.S.

FIXTURE 'F' REQUIREMENTS

1. 1-70W PAR 30 120V METAL HALIDE.
2. NOM. DIM: 10" DIA. APERTURE
3. SPUN STEEL COVER WITH MACHINED HOUSING. DRIVE/WALK-OVER RATED WITH EXTERNAL AIMING ADJUSTMENT.
4. AXIAL (WIDE) SPOT LIGHT DISTRIBUTION.
5. GASKETED CLEAR/TEMPERED NON-SLIP TEXTURED LENS.
6. FINISH: BRASS
7. UL LISTED FOR WET/OUTDOOR APPLICATION.
8. PROVIDE STRING WITH PHOTOCELL SWITCH.

IN-GRADE FLAG LIGHTING

N.T.S.

TYPE: 'C1'

FEATURES

LAMP TYPE: 50W HPS
PROFILE: 1 - LAMP
LENS: TEMPERED GLASS
BALLAST: HIGH POWER FACTOR, COLD WEATHER

GENERAL DESCRIPTION

HOUSING: DIE-CAST HEAVY DUTY ALUMINUM WITH INJECTION MOLDED SILICONE GASKET

MOUNTING: 12" BELOW SOFFIT/WALL/RECESSED

LIGHT DIST: FORWARD/BROAD

ELECTRICAL: 120 VOLTS

LISTING: UL LISTED FOR WET LOCATIONS.

NOM. DIM: 12" DIA.

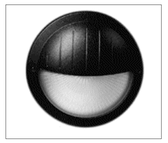

TYPE: 'C2'

FEATURES

LAMP TYPE: 32W CF
PROFILE: 1 - LAMP
LENS: INJECTION MOLDED OPAL POLYCARBONATE
BALLAST: HIGH POWER FACTOR, COLD WEATHER

GENERAL DESCRIPTION

HOUSING: DIE-CAST HEAVY DUTY ALUMINUM WITH INJECTION MOLDED SILICONE GASKET

MOUNTING: 7'-Ø", WALL/RECESSED

OPTION: EMERGENCY BATTERY PACK

ELECTRICAL: 120 VOLTS

LISTING: UL LISTED FOR WET LOCATIONS.

NOM. DIM: 12" DIA.

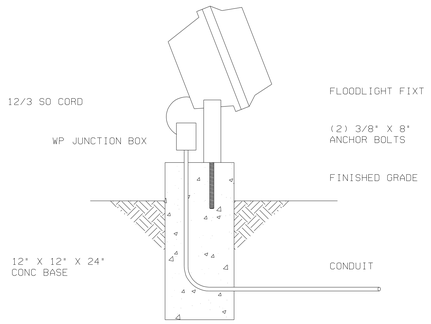

FIXTURE 'J' REQUIREMENTS:

1. 1-35W HIGH PRESSURE SODIUM (HPS 120V LAMP).
2. NOM. DIM: 6"X11"
3. PROVIDE WITH GLARE SHIELD AND BRONZE FINISH.
4. PROVIDE STRING WITH LOCAL PHOTOCELL SWITCH.
5. CONNECT TO THE SAME TIMER CONTROLLING THE FRONT BOLLARDS.

US Army Corps of Engineers
New York District

Symbol	Description	Date	App.

U.S. ARMY ENGINEER DISTRICT
CORPS OF ENGINEERS
NEW YORK, NEW YORK

Designed by: | Date: | Size | Rev.
Dwn by: | Ckd by: | Drawing file no.:
Reviewed by: | Drawing code:
Submitted by: | Plot date: 19-NOV-2004 16:07 | Plot by: Admin | Scale: 0.000000000000

File name: S:\Mission\Military\Niagara Fall AFB\MEPS\Electrical\ARCH_e\Building\Elec\Design\E-08 lighted.dgn

PN 58673
MILITARY ENTRANCE PROCESSING STATION (MEPS)
NIAGARA FALLS, NY

LIGHTING DETAILS

Sheet reference number:
E–08

Plot Date: 19-NOV-2004 16:07
Plot Scale: 1.000000000000
Plot Driver: pltwin32.pc3
Submitted by: admin
S:\Office\Assembly\Projects Fall AFB\MEPS\Electrical\Design\E-08 lighted.dgn

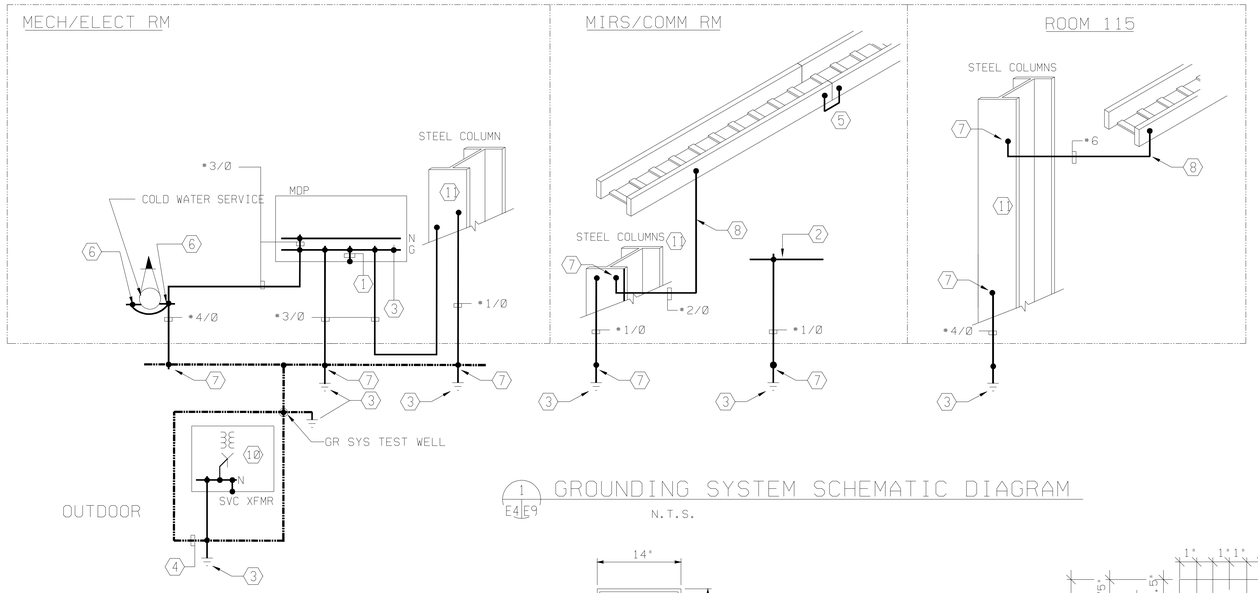

1 E4 E9 GROUNDING SYSTEM SCHEMATIC DIAGRAM

N.T.S.

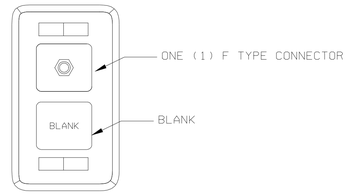

NOTE: 1. PROVIDE WITH SINGLE GANG FACEPLATE.
2. MOUNT AT 72" AFF UNLESS NOTED OTHERWISE.

5 E4 E9 TV JACK DETAIL (TYP)

N.T.S.

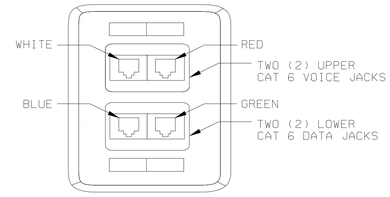

NOTE: 1. PROVIDE WITH DOUBLE GANG JUNCTION BOX AND FACEPLATE.
2. PROVIDE HINGE COVER FOR ALL JACKS.
3. CABLE AND OUTLETS SHALL BE COLOR CODE AS SHOWN WHITE AND RED - VOICE / BLUE AND GREEN - DATA

7 E4 E9 DATA/COMM JACK DETAIL (TYP)

N.T.S.

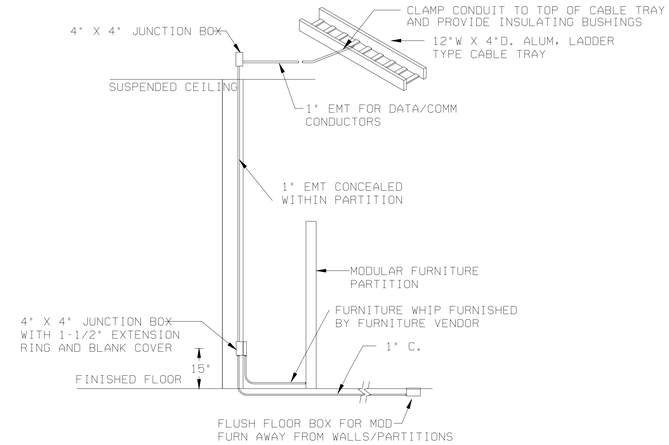

8 E4 E9 MODULAR FURNITURE DATA/ COMM CONNECTION DETAIL

N.T.S.

GROUNDING SYSTEM SCHEMATIC NOTES:

1. PROVIDE MAIN BONDING JUMPER AS REQUIRED BY N.E.C. ART 250-28.
2. 24"L X 6"W X 1/4"TH COPER GROUD BAR MOUNTED 18" AFF. MOUNT ON CERAMIC STAND-OFFS/INSULATORS. CONNECT GROUNDING CONDUCTORS TO GROUNDING BAR WITH 2-HOLE CRIMP CONNECTORS. REFER TO GROUNDING BAR DETAIL ON THIS SHEET.
3. 3/4" DIA X 10'L COPPER CLAD STEEL GROUND ROD. CONNECTIONS SHALL BE EXOTHERMIC CONNECTIONS UNLESS NOTED OTHERWISE.
4. •4/0, 30" BELOW GRADE. UNDERGROUND GROUNDING LOOP AROUND SERVICE TRANSFORMER.
5. EACH SECTION OF THE CABLE TRAY SYSTEM SHALL BE GROUNDED TOGETHER WITH A BONDING STRAP.
6. COORDINATE SIZE OF PIPE GROUNDING CONNECTOR WITH MECHANICAL DRAWINGS/CONTRACTOR. INSTALL ON THE STREET SIDE OF THE SERVICE VALVE.
7. EXOTHERMIC CONNECTION.
8. BOND CABLE TRAY SYSTEM TO THE STRUCTURAL STEEL COLUMNS.
9. LIGHTNING PROTECTIONSYSTEM DOWN CONDUCTORS SHALL BE ROUTED INSIDE THE BUILDING. REFER TO DOWN CONDUCTORS TO GROUND ROD CONNECTION DETAIL.
10. LIGHTNING PROTECTION SYSTEM CONDUCTORS SHALL BE COPPER, STRANDED, 17 GA, 19,500 CM (MIN). REFER TO SYSTEMS PLAN FOR AIR TERMINAL ARRANGEMENT.
11. EACH BUILDING STRUCTURAL STEEL COLUMN SHALL BE PROVIDED AND BONDED TO A GROUND ROD 3' (NOM) OUTSIDE OF THE BUILDING FOOTPRINT.

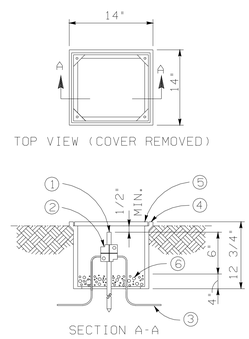

MATERIAL LIST

1. GROUND ROD
2. GROUND CLAMP
3. GROUNDING CONDUCTOR •1/0 COPPER
4. POLYMER CONCRETE FIBERGLASS REINFORCED BOX
5. COVER FOR ABOVE BOX
6. GRAVEL OR CRUSHED STONE

2 E4 E9 GROUNDING SYSTEM TEST-WELL DETAIL

N.T.S.

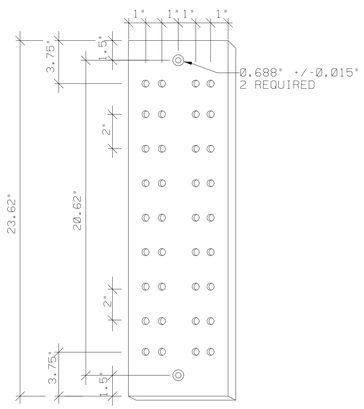

4 E4 E9 GROUND BAR DETAIL

N.T.S.

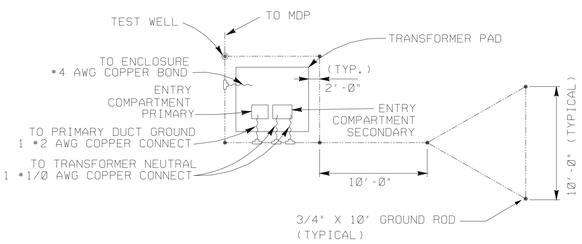

3 E1 E9 PAD MOUNTED TRANSFORMER GROUNDING DETAIL

N.T.S.

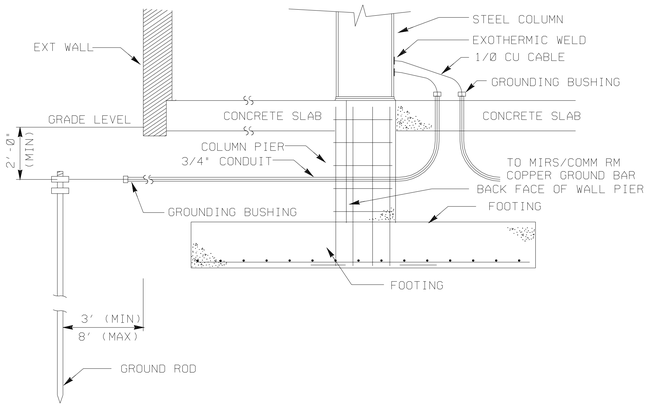

5 E4 E9 STEEL COLUMN GROUNDING DETAIL

N.T.S.

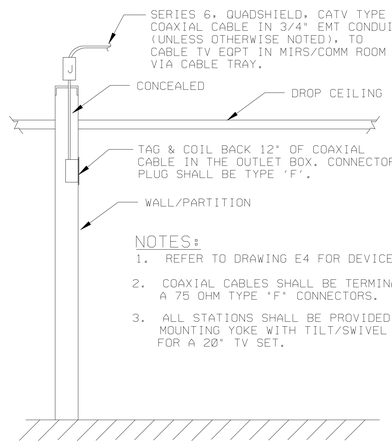

NOTES:

1. REFER TO DRAWING E4 FOR DEVICE LOCATIONS.
2. COAXIAL CABLES SHALL BE TERMINATED WITH A 75 OHM TYPE "F" CONNECTORS.
3. ALL STATIONS SHALL BE PROVIDED WITH A TV MOUNTING YOKE WITH TILT/SWIVEL BRACKETS FOR A 20" TV SET.

9 E4 E9 TV JACK DETAIL (TYP)

N.T.S.

US Army Corps of Engineers
New York District

Symbol	Description	Date	Appr.

Rev.	Date	Description	By

U.S. ARMY ENGINEER DISTRICT
CORPS OF ENGINEERS
NEW YORK, NEW YORK

Designed by: | Date: | Size:
Dwn by: | Ckd by: | Drawing file no:
Reviewed by: | Drawing code:
Submitted by: | Plot date: 22-NOV-2004 14:24 | Plot by: admjenwe | Scale: 0.000000000000

File name: S:\Services\military\Niagara Falls\MEPS\Electrical\DWGs\Scheme\Electrical\E-09SysDetl.dgn

PN 59873
MILITARY ENTRANCE PROCESSING STATION (MEPS)
NIAGARA FALLS, NY

SYSTEM DETAILS

Sheet reference number:
E–09

Submitted by: e3jenwe
Sa=file:\\dcwinfo\projdgn\ Fol: MEPS\MEPS\Electrical\Specs\Electrical\Specs\E-09SysDetl.dgn
Plot Date: 22-NOV-2004 14:24

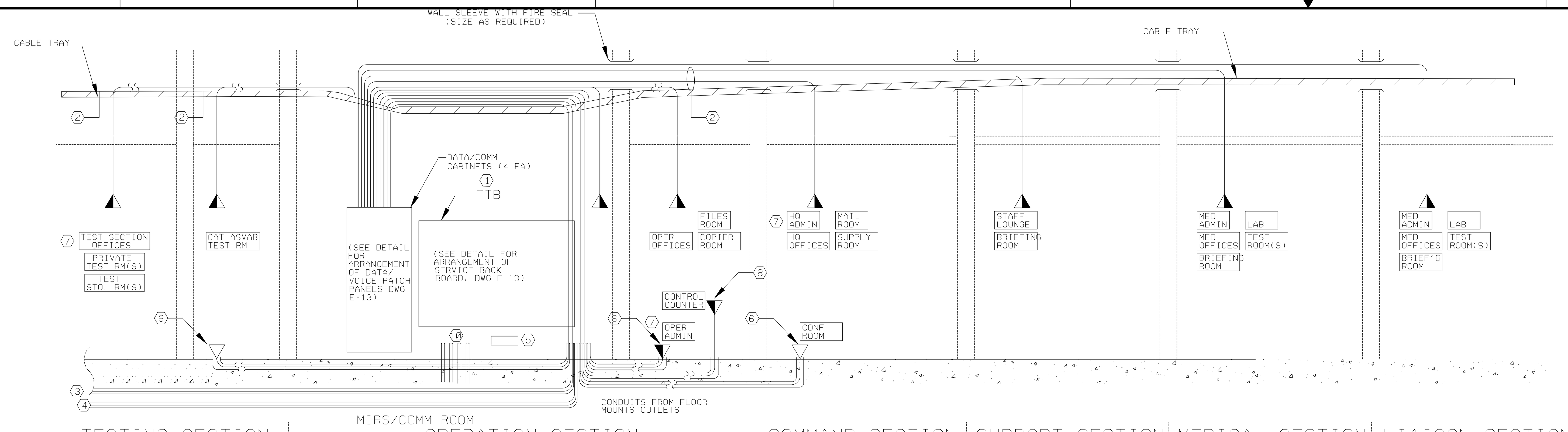

6 E4 E10 DATA/COMM SYSTEM RISER DIAGRAM

N.T.S.

DATA/COMM GENERAL NOTES:

1. REFER TO PLAN DRAWINGS FOR THE QUANTITIES AND LOCATIONS OF DATA/COMM EQUIPMENT, ACCESSORIES, DEVICES AND HARDWARE.
2. EACH DATA/COMM DROP SHALL BE (4) 4-PAIRS PLENUM TYPE CAT 6 UTP CONDUCTORS IN 1" CONCEALED CONDUIT UNLESS NOTED OTHERWISE.
3. CONTRACTOR SHALL TERMINATE DATA/COMM CABLES AT THE USER OUTLET JACKS AND AT PATCH PANEL EQUIPMENT. FINAL CONNECTION AND TESTING TELECOMMUNICATION.
4. PROVIDE DATA/COMM RUNS WITH CABLE MANAGEMENT HARDWARE/EQUIPMENT IN MIRS/COMM RM.
5. DEVICES SHALL BE MOUNTED AT 18" AFF UNLESS NOTED OTHERWISE.
6. CAT 6 CABLING FROM OUTLETS TO CABLE TRAY ABOVE THAN ROUTED TO DATA/VOICE PATCH PANELS IN CABINETS (SEE DETAILS FOR PAWEL ARRANGEMENT)

DATA/COMM KEY NOTES:

(1) TELEPHONE TERMINAL BACKBOARDS (TTB) SHALL BE 2-PCS OF 4'X8'X3/4" THICK TREATED PLYWOOD WITH 2-COATS OF FIRE RETARDANT PAINT. REFER TO DRAWING SHEET E4.

(2) ROUTE DATA/COMM CONDUCTORS THROUGH THE 12"W X 4"D ABOVE CEILING LADDER CABLE TRAY.

(3) 200-PAIR TELEPHONE SERVICE CABLE (IN 4"C.) FROMM COMM VAULT NORTH OF BLDG 806.

(4) 3-4" SPARE CONDUITS. PROVIDE 1-4"C., WITH 4-1" INNER DUCTS FOR THE INSTALLATION OF 12-STRAND FIBER OPTIC CABLE.

(5) COPPER GROUND BAR AT 18" AFF MOUNTED OF CERAMIC STANDOFFS.

(6) IN-FLOOR MULTI-SERVICE (PWR/DATA/COMM) FLOOR BOXES. COORDINATE LOCATION WITH FURNITURE ARRANGEMENT. TERMINATE POWER

(6) (CON'T) AT THE SOURCE PANEL(S).

(7) REFER TO MODULAR FURNITURE CONNECTION DETAIL ON THIS SHEET FOR MODULAR FURNITURES ADJACENT TO WALLS/PARTIONS.

(8) PROVIDE 1" INSULATED, FLEXIBLE CONDUIT FROM MULTI-SERVICE FLOOR BOXES TO THE DATA/COMM OUTLET JACKS ON THE CONTROL COUNTER. DATA/COMM AND POWER RUNS SHALL BE PROVIDED WITH SEPARATE RACEWAYS.

(9) CABLES SHALL BE IDENTIFIED WITH CABLE ORIGIN.

(10) 4" SERVICE CONDUITS (SEE DWG E-04)

LIGHTING FIXTURE SCHEDULE

FIXTURE SYMBOL	LAMPS NO	WATT(S)	TYPE	MOUNTING	MOUNTING HEIGHT	DESCRIPTION	MANUFACURER - CATALOGUE NO. (OR APPROVED EQUAL)	NOTES
A1	2	32	F32UT8	RECESSED	CEILING	2'X2' 2L PRISMATIC LUMINAIRE	COOPER LTG-METALUX-2GC-2U6T8A-120V-EB82	
A2	3	32	F32T8	RECESSED	CEILING	2'X4' 3L PRISMATIC LUMINAIRE	COOPER LTG-METALUX-2GC-332A-120V-EB83	(3)
B1	2	32	F32UT8	RECESSED	CEILING	2'X2' 2L PARABOLIC LUMINAIRE	COOPER LTG-METALUX-2P2GAX-2U6T8S-22I-120V-EB82	(8)
B2	3	32	F32UT8	RECESSED	CEILING	2'X2' 3L PARABOLIC LUMINAIRE	COOPER LTG-METALUX-2P2GAX-2U6T8S-22I-120V-EB83	(1)(2)(5)(8)
C1	1	50	HPS	WALL	(9)	12" DIA REGRESSED FORWARD THROW LUMINAIRE	COOPER LTG-FAIL SAFE-EYELITE HARMONY	(6)(7)
C2	1	32	CF32Q	WALL	(9)	12" DIA REGRESSED OUTSIDE EGRESSES LUMINAIRE	COOPER LTG-FAIL SAFE-T SERIES	(5)(6)(7)
D	2	32	F32T8	(10)	SURFACE	4'-2L STRIP FLOURESCENT LIGHTING FIXTURE	COOPER LTG - METALUX - SS SERIES	(5)
F	1	39	MH	GRADE	GRADE	FLAG ADJ FLOODLIGHT W/NARROW AXIAL SPOT DISTRIBUTION	COOPER LTG - LUMIERE - BOCA 613	(6)
G	1	100	PAR38	RECESSED	CEILING	6" DIA ADJUSTABLE RECESSED SPOT LIGHT	LITHONIA - DOWNLIGHT - 6AC2A	
H1	1	26	CFQ26W	RECESSED	CEILING	6" DIA VERTICAL DOWNLIGHT - BLACK BAFFLE	COOPER LTG - PORTFOLIO - PD6	
H2	2	26	CFQ26W	RECESSED	SOFFIT	8" DIA HORIZONTAL DOWNLIGHT W/CROSS BAFFLE	COOPER LTG - PORTFOLIO - PD8	
I	2	32	F32T8	PENDANT	8'-0"	4FT 2L INDUSTRIAL FLUORESCENT FIXTURE W/WIRE GUARD	COOPER LTG - METALUX - EIVM-232-120-EB82	(5)(12)
J	1	35	HPS	PEDESTAL	GRADE	SIGNAGE FLOODLIGHT	LITHONIA - 7000	(6)(7)
L	1	75	MR16	RECESSED	CEILING	3" DIAMETER LOW VOLTAGE DIMMABLE WALLWASH EYELID	LITHONIA - 3VW1	
O	4	26	CFQ26W	STEM	12'-0"	36" DIA SHALLOW BOWL UP/DOWNLIGHT W/TOP LENS	COOPER LTG - CP 3280 - 8F13	
P	1	50	HPS	WALL	7'-6"	OVER-DOORWAY LOW-CUTOFF MINI WALLPACKS	LITHONIA - PSG7 - TWAC 50S	(6)(7)
Q	1	150	HPS	POLE	14'-0"	LOW-HEIGHT AREA LIGHTING (SMALL) LUMINAIRE	COOPER LTG - MCGRAW-EDISON - ZDS CREDENZA	(6)(7)(13)
R	1	70	HPS	BOLLARD	GRADE	8" DIA 42"H PATHWAY LUMINAIRE	COOPER LTG - MCGRAW-EDISON - BRC-42 - 50HPS	(6)(7)
T	1	60	INCAND	CEILING	(11)	5" DIA LENSED DOWNLIGHT	COOPER LTG - PORTFOLIO - HD4 SERIES	(7)
U	1	17	F17T8	SURFACE	CABINET	24' UNDERCABINET TASK LIGHT W/INTEGRAL ROCKER SW	LITHONIA - 2UC	
W1	3	13	CFQ13W	WALL	7'-0"	WALL-MOUNTED OUTDOOR LUMINAIRE	VISA LIGHTING - COLONADE - OW1046	(5)(6)(7)
W2	2	13	CFQ13W	WALL	7'-0"	WALL MOUNTED (INDOOR) SCONCE	LITHONIA - SCONCES - 11956	
X	-	-	LED	(4)	7'-6"	ILLUMINATED EXIT SIGN W/BATT BACK-UP	-	(4)
-	-	-	-	-	-	-	-	
-	-	-	-	-	-	-	-	

LIGHTING FIXTURE SCHEDULE NOTES:

(1) FIXTURES SHALL BE MOUNTED AFTER MECH/ELECT ARE INSTALLED WITHIN THE AREA SERVED.

(2) PROVIDE LUMINAIRES WITH DIMMING BALLAST WHERE APPLICABLE.

(3) PROVIDE LIGHTING FIXTURE WITH RFI FILTER FOR ROOM 127.

(4) PROVIDE WALL, END OR STEM MOUNTED FIXTURES AS APPLICABLE. PUNCH DIRECTIONAL ARROWS ACCORDINGLY.

(5) PROVIDE INDICATED LUMINAIRES WITH EMERGENCY INVERTER BALLAST AS SHOWN ON PLAN DRAWINGS.

(6) PROVIDE WITH COLD-WEATHER BALLAST.

(7) PROVIDE FIXTURES APPROVED FOR WET LOCATION APPLICATION.

(8) PROVIDE DEEP CELL (6-5/8") LOUVERS FOR PRIVATE OFFICES, OPEN OFFICES, TEST ROOMS AND CLASSROOM APPLICATIONS.

(9) MOUNT LIGHTING FIXTURE 12 INCHES BELOW SOFFIT.

(10) LOBBY PERIMETER INDIRECT LIGHTING FIXTURE.

(11) MOUNTED ABOVE UNITARY SHOWER STALL.

(12) FIXTURES SHALL BE MOUNTED AFTER MECH/ELECT ARE INSTALLED WITHIN THE AREA SERVED.

(13) STREET AND PARKING LOT LUMINAIRES SHALL BE FORWARD-THROW AIMED AT THE STREET AND PARKING SPACES RESPECTIVELY.

MECHANICAL EQUIPMENT CONNECTIONS SCHEDULE

(REFER TO SINGLE-LINE-DIAGRAM FOR ADDITIONAL INFORMATION)

EQUIPMENT DESIGNATION	DESCRIPTION	ELECTRICAL REQUIREMENTS VOLTS	HP	PANEL	CB(A)	POWER WIRING/CONDUIT
CH-1	CHILLER	208V 3P	80 (TON)	MDP	600	2-SETS OF 3-350KCMIL, #1(G), 3C.
CHWP-1	CHILLED WATER PUMP	208V 3P	7 1/2	PM	50	3-#8, #10(G),3/4"C.
CHWP-2	CHILLED WATER PUMP	208V 3P	7 1/2	PM	50	3-#8, #10(G),3/4"C.
HWP-1	HOT WATER PUMP	208V 3P	7 1/2	PM	50	3-#8, #10(G),3/4"C.
HWP-2	HOT WATER PUMP	208V 3P	7 1/2	PM	50	3-#8, #10(G),3/4"C.
B-1	BOILER	120V 1P	(1)	PM	20	2-#12, #12(G),3/4"C.
B-2	BOILER	120V 1P	(1)	PM	20	2-#12, #12(G),3/4"C.
B-3	BOILER	120V 1P	(1)	PM	20	2-#12, #12(G),3/4"C.
PHWP-1	PRIMARY HEATING PUMP	208V 3P	1 1/2	PM	15	3-#12, #12(G),3/4"C.
PHWP-2	PRIMARY HEATING PUMP	208V 3P	1 1/2	PM	15	3-#12, #12(G),3/4"C.
PHWP-3	PRIMARY HEATING PUMP	208V 3P	1 1/2	PM	15	3-#12, #12(G),3/4"C.
AHU-1	AIR HAND UNIT - ADMIN	208V 3P	15	MDP	100	3-#4, #8(G), 1"C.
AHU-2	AIR HAND UNIT - MEDIC	208V 3P	10	P-2	60	3-#6, #10(G),3/4"C.
AHU-3	AIR HAND UNIT - LIAISO	208V 3P	15	P-3	100	3-#4, #8(G), 1"C.
EWC-1	ELECT WATER COOLER	120V 1P	(1)	P1	15	2-#12, #12(G),3/4"C.
EWC-2	ELECT WATER COOLER	120V 1P	(1)	P2	15	2-#12, #12(G),3/4"C.
EWC-3	ELECT WATER COOLER	120V 1P	(1)	P3	15	2-#12, #12(G),3/4"C.
CP-1	HVAC CONTROL PANEL	120V 1P	(1)	PM	15	2-#12, #12(G),3/4"C.
DX-1	HEAT PUMP (COMP)	208V 2P	(1)	P1	20	2-#10, #10(G),3/4"C.
AC-1	HEAT PUMP (EVAP)	120V 1P	(1)	P1	15	2-#12, #12(G),3/4"C.
UH-*	ELEC/MECH RM HEATERS	120V 1P	(1)	PM	20	2-#12, #12(G),3/4"C.
VAV-*	HVAC VAV BOXES	120V 1P	(1)	(2)	20	2-#12, #12(G),3/4"C.
SF-1	MECH RM SUPPLY FAN	203V 3P	1	PM	15	3-#12, #12(G),3/4"C.
EF-1	LIAISON TOILET EX FAN	120V 1P	(1)	P-3	15	2-#12, #12(G),3/4"C.
EF-2	ELECT RM EX FAN	120V 1P	(1)	PM	15	2-#12, #12(G),3/4"C.
EF-3	MAIL RM EX FAN	208V 3P	3/4	PM	15	3-#12, #12(G),3/4"C.
EF-4	MALE ORTHO EX FAN	208V 3P	1	P2	15	3-#12, #12(G),3/4"C.
GM-1	GARBAGE GRINDER	120V 1P	1	PK	20	3-#12, #12(G),3/4"C.
RFP-1	RAD FL HTG PUMP	120V 1P	1	P-1	20	2-#12, #12(G),3/4"C.

MECHANICAL EQUIPMENT CONNECTION SCHEDULE NOTES:

(1) FRACTIONAL HORSEPOWER EQUIPMENT.

(2) VAVS SERVING AN AHU SHALL BE CONNECTED TO THE PANEL SERVING THE AREA, I.E. ADMIN (AHU-1) AREA VAVS SHALL BE CONNECTED TO PANELBOARD P-1(1). VAVS SHALL BE PROVIDED WITH A MOTOR RATED SWITCH.

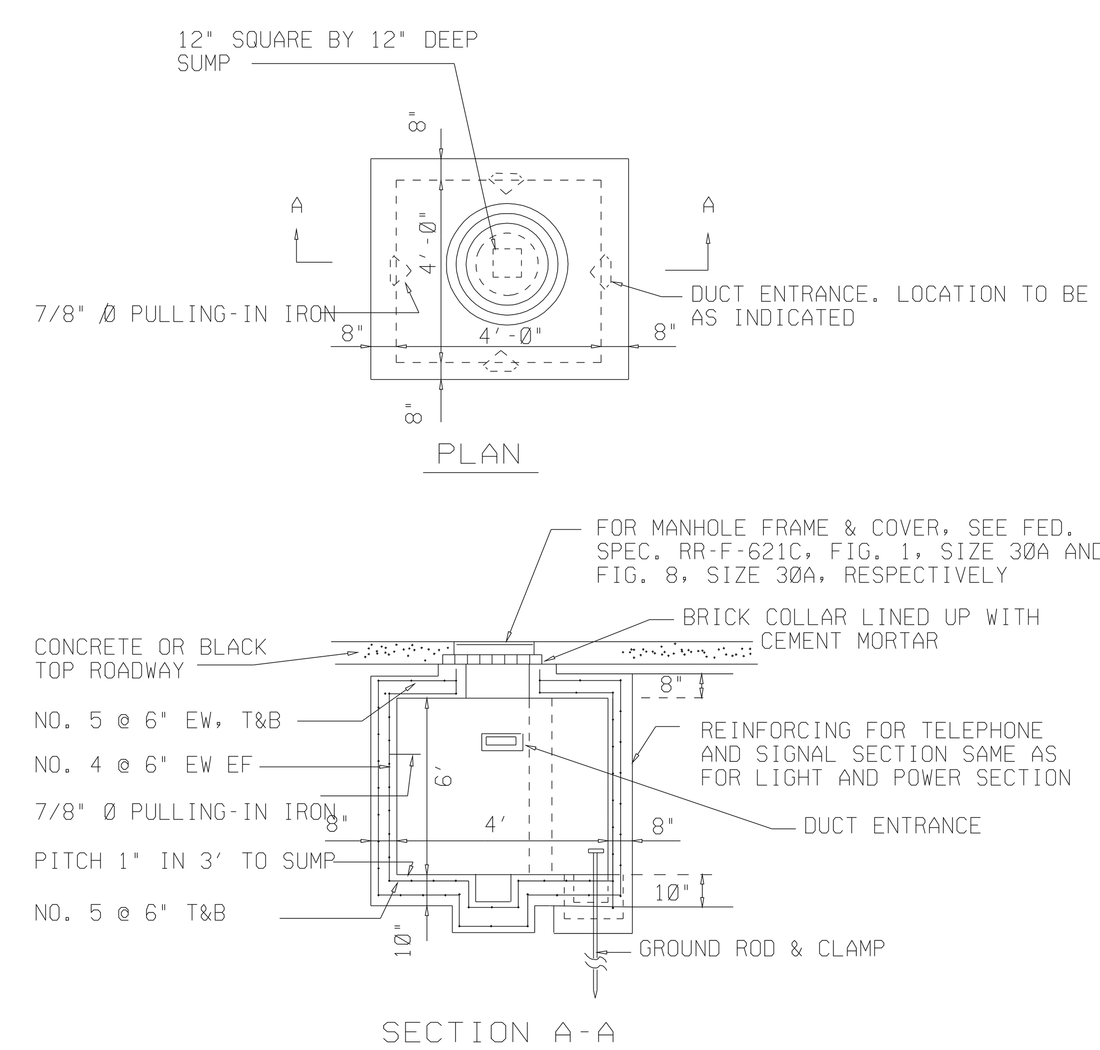

2 E1 E10 STANDARD (TRAFFIC) COMM MANHOLE

N.T.S.

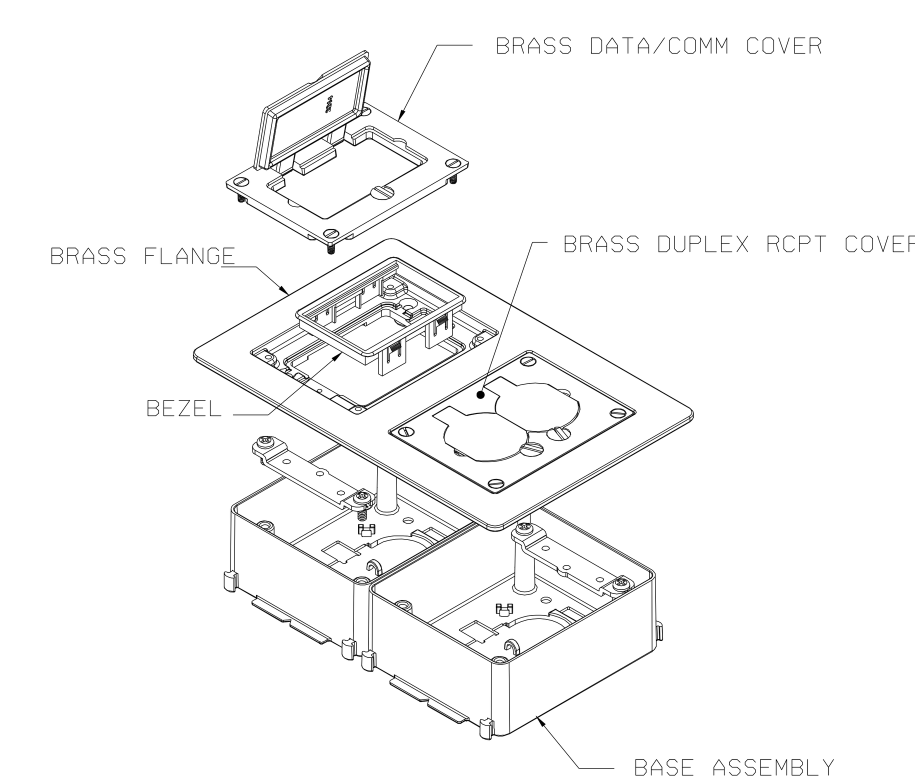

3 E4 E10 FLOOR MOUNTED DATA/COMM OUTLET

N.T.S.

US Army Corps of Engineers
New York District

U.S. ARMY ENGINEER DISTRICT
CORPS OF ENGINEERS
NEW YORK, NEW YORK

Designed by: | Dwn by: | Ckd by: | Reviewed by: | Submitted by: | Date: | Size: | Rev.: | Drawing file no.: | Drawing code:

Plot date: 19-NOV-2004 16:07
Plot by: e3jetmwe
Scale: 0.039369:1.000000

File name: S:\fileroom\military\Niagara Fall AFB\MEPS\Electrical\90%(+)Submis'n\ElectDwgs\E-10SysDet2.dgn

PN 59873
MILITARY ENTRANCE PROCESSING STATION (MEPS)
NIAGARA FALLS, NY

SYSTEM DETAILS AND SCHEDULES

Sheet reference number: E-10

PANEL DP-T MOUNT SURFACE LOCATION ELECT ROOM MCB 250A
VOLTS 208/120 PHASE 3 WIRES 5 (*) AIC 65,000 BUS 250A

CIR. NO.	TRIP AMPS	NO. POLES	LOAD DESCRIPTION	CON. LOAD VA	CON. LOAD VA	LOAD DESCRIPTION	TRIP AMPS	NO. POLES	CIR. NO.
1	70	3	ISOLATED GROUND PANEL PT-1	6865	2785	ISOLATED GROUND PANEL PT-2	40	3	2
3				6865	2785				4
5				6865	2785				6
7	50	3	ISOLATED GROUND PANEL PT-3	3830	0	SPARE	20	1	8
9				3830	0	SPARE	20	1	10
11				3830	0	SPARE	20	1	12
13	20	1	SPARE	0		SPACE			14
15	20	1	SPARE	0		SPACE			16
17	20	1	SPARE	0		SPACE			18
19			SPACE			SPACE			20
21			SPACE			SPACE			22
23			SPACE			SPACE			24
25			SPACE						26
27			SPACE						28
29			SPACE						30

TOTAL CONNECTED LOAD (KVA) 40.6 DEMAND LOAD (KVA) 30.7

(*) PROVIDE WITH ISOLATED GROUND BUS AND 200% NEUTRAL

PANEL PK MOUNT RECESSED LOCATION ELECT CLOSET MCB 100A
VOLTS 208/120 PHASE 3 WIRES 4 AIC 10,000 BUS 100A

CIR. NO.	TRIP AMPS	NO. POLES	LOAD DESCRIPTION	CON. LOAD VA	CON. LOAD VA	LOAD DESCRIPTION	TRIP AMPS	NO. POLES	CIR. NO.
1	20	1	RCPT - REFRIGERATOR	825	641	LTS - LOBBY WALL	20	1	2
3	20	1	RCPT - COUNTER/DINING	900	1602	LTS - LOBBY CEILING	20	1	4
5	20	1	RCPT - PREP/STRG	540	1558	LTS - LOBBY PERIMETER	20	1	6
7	20	1	RCPT - OUTSIDE GFCI	720	1475	LTS - LOBBY PERIMETER	20	1	8
9	20	1	RCPT - VENDING MACH	1250	572	LTS - DINING WALL/DOWN	20	1	10
11	20	1	RCPT - VENDING MACH	1250	524	LTS - DINING CEILING	20	1	12
13	20	1	RCPT - FILE RM	900	626	LTS - KITCH/PREP RM	20	1	14
15	20	1	RCPT - COPY RM	1080	0	LTS - OUTSIDE	20	1	16
17	20	1	RCPT - RECEPTIONIST	900	1091	LTS - VESTIBULE	20	1	18
19	20	1	PWR-GARBAGE GRINDER	875	833	LTS - COPY/FILE RM	20	1	20
21	20	1	PWR - PA SYSTEM	500		SPACE			22
23	20	1	PWR - DOOR ACCESS	50		SPACE			24
25	20	1	SPARE	0		SPACE			26
27	20	1	SPARE	0		SPACE			28
29	20	1	SPARE	0	500	PWR - FACP (VESTIBULE)	20	1	30

TOTAL CONNECTED LOAD (KVA) 20.2 DEMAND LOAD (KVA) 16.9

PANEL P-2(1) MOUNT SURFACE LOCATION ELECT CLOSET MCB 150A
VOLTS 208/120 PHASE 3 WIRES 4 AIC 10,000 BUS 225A

CIR. NO.	TRIP AMPS	NO. POLES	LOAD DESCRIPTION	CON. LOAD VA	CON. LOAD VA	LOAD DESCRIPTION	TRIP AMPS	NO. POLES	CIR. NO.
1	60	3	AIR HANDLING UNIT AHU - 2	3699	360	RCPT - DEDICATED LAB	20	1	2
3				3699	500	PWR - HVAC VAV BOXES	20	1	4
5				3699	372	EXHAUST FAN EF-4	20	3	6
7	20	1	RCPT - FOUNTAIN	900	372				8
9	20	1	RCPT - FRONT/OUTSIDE	360	372				10
11	20	1	RCPT - LOBBY	1080	250	PWR - HEAT TRACING	20	1	12
13	20	1	RCPT - TOILET	900	500	AHU 2 RCPT, LTG, DAMPER	20	1	14
15	20	1	RCPT - ADMIN MEDICAL	1080	1383	AHU 2 VAV BOXES	20	1	16
17	20	1	RCPT - ADMIN MEDICAL	1080	1215	AHU 2 VAV BOXES	20	1	18
19	20	1	RCPT - MED BREIFING	1080	1558	AHU 2 VAV BOXES	20	1	20
21	20	1	RCPT - VISION	1080	1716	AHU 2 VAV BOXES	20	1	22
23	20	1	RCPT - AUDIO	1080	870	AHU 2 VAV BOXES	20	1	24
25	20	1	RCPT - FEM ORTHO	1080	50	PWR - DOOR ACCESS	20	1	26
27	20	1	RCPT - EXAM RM	1080	125	RAD FL HTG PUMP	20	1	28
29	20	1	RCPT - EXAM RM	1080	0	SPARE	20	1	30
31	20	1	RCPT - EXAM RM	900		SPACE			32
33	20	1	RCPT - EKG RM	900		SPACE			34
35	20	1	RCPT - LAB/TOILETS	1080		SPACE			36
37	20	1	RCPT - EXAM RM	1080		SPACE			38
39	20	1	RCPT - MEDICAL OFFICER	1080		SPACE			40
41	20	1	RCPT - DEDIC'D EXAM RM	360	250	FIRE ALARM STROBE PWR	20	1	42

TOTAL CONNECTED LOAD (KVA) 51.3 (*) DEMAND LOAD (KVA) 34.8 (*)

(*) INCLUDES PNL P-2(2) LOAD

PANEL P-M MOUNT SURFACE LOCATION MECH RM MCB 150A
VOLTS 208/120 PHASE 3 WIRES 4 AIC 65,000 BUS 225A

CIR. NO.	TRIP AMPS	NO. POLES	LOAD DESCRIPTION	CON. LOAD VA	CON. LOAD VA	LOAD DESCRIPTION	TRIP AMPS	NO. POLES	CIR. NO.
1	50	3	CHILLED WATER PUMP - 1 (CHWP-1)	2906	2906	CHILLED WATER PUMP - 2 (CHWP-2)	50	3	2
3				2906	2906				4
5				2906	2906				6
7	50	3	HOTWATER PUMP - 1 (HWP-1)	2906	2906	HOT WATER PUMP - 2 (HWP-2)	50	3	8
9				2906	2906				10
11				2906	2906				12
13	20	1	BOILER 1	1175	480	SUPPLY FAN - SF-1 MECH ROOM	15	3	14
15	20	1	BOILER 2	1175	480				16
17	20	1	BOILER 3	1175	480				18
19	20	1	GLYCOL PUMP (GMP-1)	864	684	HTG SYS PRI PUMP PHWP-1	15	3	20
21	20	1	RCPT - ELECT RM	720	684				22
23	20	1	UH - ELECT/MECH RMS	1175	684				24
25	20	1	TEMP CTRL PNL	250	684	HTG SYS PRI PUMP PHWP-2	15	3	26
27	20	1	RCPT - MECH RM	900	684				28
29	20	1	CIRC PUMP - CP 1	275	684				30
31	20	1	EMCS RECPT - ELECT RM	250	684	HTG SYS PRI PUMP PHWP-3	15	3	32
33	20	1	EXHAUST FAN - EF 3	1176	684				34
35	20	1	LTS - ELECT/MECH RMS	574	684				36
37	20	1	ABOVE DOORWAY LTS - SUPPLY/ELECT/MECH	500	0	SPARE	20	1	38
39	20	1	LTS-REAR WALKWAY (**)	0	0	SPARE	20	1	40
41	20	1	SPARE	0	0	SPARE	20	1	42

TOTAL CONNECTED LOAD (KVA) 71.1 DEMAND LOAD (KVA) 44.2

(**) VIA ASTRONOMIC TIMER

PANEL P-1(1) MOUNT SURFACE LOCATION MECH RM MCB 150A
VOLTS 208/120 PHASE 3 WIRES 4 AIC 42,000 BUS 225A

CIR. NO.	TRIP AMPS	NO. POLES	LOAD DESCRIPTION	CON. LOAD VA	CON. LOAD VA	LOAD DESCRIPTION	TRIP AMPS	NO. POLES	CIR. NO.
1	20	2	HEAT PUMP DX-1 (OUTDOOR UNIT)	1200	1015	RCPT - LOUNGE REF	20	1	2
3				1200	1080	RCPT - LUONGE	20	1	4
5	15	1	AC-1 H/P (INDOOR UNIT)	120	1080	RCPT - SUPPLY RM	20	1	6
7	20	1	AHU-1 RCPR, LTG, DAMPER	500	1080	RCPT - MAIL RM	20	1	8
9	20	1	PWR - RAD FL HTG PUMP	125	720	RCPT - TOILETS	20	1	10
11	20	1	RCPT - STN NCO	1080	180	RCPT - TRAVEL DED'ED	20	1	12
13	20	1	RCPT - HQ ADMIN	1080	180	RCPT - TTB DEDICATED	20	1	14
15	20	1	RCPT - CONF RM	1080	1080	RCPT - EDU TEST/SPEC	20	1	16
17	20	1	RCPT - COMMANDER	900	1080	RCPT EDU/TEST COORD	20	1	18
19	20	1	RCPT - BUDGET/MIRS	1080	720	TEST COORD/STORAGE	20	1	20
21	20	1	RCPT - OPER/PROCESS	1080	1080	RCPT - EDU SPECIALIST	20	1	22
23	20	1	RCPT - OPER/PROCESS	900	900	RCPT - TEST ADMIN	20	1	24
25	20	1	RCPT - OPER ADMIN	1080	1080	RCPT - TEST RM	20	1	26
27	20	1	RCPT - OPER ADMIN	1080	1080	RCPT - TEST RM	20	1	28
29	20	1	RCPT - OPER ADMIN	1080	1080	RCPT - FURN/STORAGE	20	1	30
31	20	1	RCPT - OPER ADMIN	1080		SPACE			32
33	20	1	PWR - HVAC VAV BOXES	1975		SPACE			34
35	20	1	PWR - HVAC VAV BOXES	1900		SPACE			36
37	20	1	PWR - HVAC VAV BOXES	1560		SPACE			38
39	20	1	PWR - DOOR ACCESS	50		SPACE			40
41	20	1	EXIT SIGNS	250	250	FIRE ALARM STROBE PWR	20	1	42

TOTAL CONNECTED LOAD (KVA) 45.5 (*) DEMAND LOAD (KVA) 32.9 (*)

(*) INCLUDES PNL P-1(2) LOAD

PANEL P-3 MOUNT SURFACE LOCATION ELECT CLOSET MCB 150A
VOLTS 208/120 PHASE 3 WIRES 4 AIC 10,000 BUS 225A

CIR. NO.	TRIP AMPS	NO. POLES	LOAD DESCRIPTION	CON. LOAD VA	CON. LOAD VA	LOAD DESCRIPTION	TRIP AMPS	NO. POLES	CIR. NO.
1	100	3	AIR HANDLING UNIT AHU - 3	5548	886	LTS-ARCADE/MARINES	20	1	2
3				5548	1280	LTS-NGD/TOIL'S/TEST RMS	20	1	4
5				5548	1190	LTS-NAVY	20	1	6
7	20	1	RCPT - NAVY TEST RM	900	1071	LTS-ARMY/SEC INTERVIEW	20	1	8
9	20	1	RCPT - NAVY	1080	1190	LTS-A'FORCE/WAIT RM	20	1	10
11	20	1	RCPT - WAIT RM	900	1733	LTS-CEREMONY RM	20	1	12
13	20	1	RCPT - ARMY	1080	738	LTS-WAITRM CEILING	20	1	14
15	20	1	RCPT - ARMY/SECURITY	900	953	LTS-WAITRM CEILING	20	1	16
17	20	1	RCPT - AIR FORCE	1080	750	LTS-WALL	20	1	18
19	20	1	RCPT - CEREMONY RM	900	637	LTS-OUT PERIMETER (**)	20	1	20
21	20	1	RCPT - GUEST WAIT RM	900	1728	AHU 3 VAV BOXES	20	1	22
23	20	1	RCPT - BREIFING RM	1080	1728	AHU 3 VAV BOXES	20	1	24
25	20	1	RCPT - DRINK FOUNTAIN	1260	1728	AHU 3 VAV BOXES	20	1	26
27	20	1	RCPT - NAT GUARD	1080	1558	AHU 3 VAV BOXES	20	1	28
29	20	1	RCPT - MARINES	900	50	PWR - DOOR ACCESS	20	1	30
31	20	1	RCPT - MAR/ELECT RM	900	0	SPARE	20	1	32
33	20	1	RCPT - ARCADE	1080	0	SPARE	20	1	34
35	20	1	PWR - HVAC VAV BOXES	1560	0	SPARE	20	1	36
37	20	1	PWR - AHU 3 MOT DMPR	250	0	SPARE	20	1	38
39	20	1	PWR - EXHAUSTFAN EF-3	750	0	SPARE	20	1	40
41	20	1	LTS -EXIT WAIT'G RM	250	250	FIRE ALARM STROBE PWR	20	1	42

TOTAL CONNECTED LOAD (KVA) 51.9 DEMAND LOAD (KVA) 41.1

(**) VIA ASTRONOMIC TIMER

US Army Corps of Engineers
New York District

U.S. ARMY ENGINEER DISTRICT
CORPS OF ENGINEERS
NEW YORK, NEW YORK

Designed by: | Dwn by: | Ckd by: | Reviewed by: | Submitted by:
Date: | Size: | Rev.: | Drawing file no.: | Drawing code:
Plot date: 19-NOV-2004 16:08 | Plot by: e3jetmwe | Scale: 0.039369:1.000000
File name: S:\fileroom\military\Niagara Fall AFB\MEPS\Electrical\90%(+)Submis'n\ElectDwgs\E-11Sched1.dgn

PN 59873
MILITARY ENTRANCE PROCESSING STATION (MEPS)
NIAGARA FALLS, NY

SCHEDULES

Sheet reference number:
E-11

PANEL PT-1 MOUNT SURFACE LOCATION MIRS/COMMRM MCB 70A

VOLT 208/120 PHASE 3 WIRES 5 (*) AIC 42,000 BUS 100A

CIR. NO.	TRIP AMPS	NO. POLES	LOAD DESCRIPTION	CON. LOAD VA	CON. LOAD VA	LOAD DESCRIPTION	TRIP AMPS	NO. POLES	CIR. NO.
1	20	1	IGRCPT-LOUNGE/MAIL RM	1320	1320	IGRCPT-EDU SPECIALIST	20	1	2
3	20	1	IGRCPT-HQ ADMIN	1320	880	IGRCPT-TEST COORD	20	1	4
5	20	1	IGRCPT-COM'DER/TRAVEL	1320	880	IGRCPT-TEST ROOM	20	1	6
7	20	1	IGRCPT-BUDGET	1320	1320	IGRCPT-TEST ROOM	20	1	8
9	20	1	IGRCPT-OPER/PROCESS	1320	1320	IGRCPT-TEST ROOM	20	1	10
11	20	1	IGRCPT-OPER ADMIN	1320	1320	IGRCPT-TEST ROOM	20	1	12
13	20	1	IGRCPT-OPER ADMIN	1320	1320	IGRCPT-TEST ROOM	20	1	14
15	20	1	IGRCPT-OPER ADMIN	1320		SPACE			16
17	20	1	DATA/COMM EQUIPT RACK	1080		SPACE			18
19	20	1	DATA/COMM EQUIPT RACK	1080		SPACE			20
21	20	1	DATA/COMM EQUIPT RACK	1080		SPACE			22
23	20	1	DATA/COMM EQUIPT RACK	1080		SPACE			24
25	20	1	SPARE	0		SPACE			26
27	20	1	SPARE	0		SPACE			28
29	20	1	SPARE	0		SPACE			30

TOTAL CONNECTED LOAD(KVA) 28.9 DEMAND LOAD(KVA) 20.6

* PROVIDE WITH ISOLATED GROUND BUS AND 200% NEUTRAL

PANEL PT-3 MOUNT SURFACE LOCATION ELECT CLOSET MCB 50A

VOLT 208/120 PHASE 3 WIRES 5 (*) AIC 10,000 BUS 100A

CIR. NO.	TRIP AMPS	NO. POLES	LOAD DESCRIPTION	CON. LOAD VA	CON. LOAD VA	LOAD DESCRIPTION	TRIP AMPS	NO. POLES	CIR. NO.
1	20	1	IG RCPT - TEST RMS	880	1320	IG RCPT - FILE ROOM BREAKOUT/COPY RM	20	1	2
3	20	1	IG RCPT - NAVY	1720	880	IG RCPT - MARINES	20	1	4
5	20	1	IG RCPT - ARMY	1320	1760	IG RCPT - NAT GUARD	20	1	6
7	20	1	IG RCPT - SECURITY INT AIR FORCE	1320	0	SPARE	20	1	8
9	20	1	IG RCPT - AIR FORCE	880	0	SPARE	20	1	10
11	20	1	IG RCPT - BRIEFING RM RECEPTIONIST	1320	0	SPARE	20	1	12
13	20	1	SPARE	0		SPACE			14
15	20	1	SPARE	0		SPACE			16
17	20	1	SPARE	0		SPACE			18
19			SPACE			SPACE			20
21			SPACE			SPACE			22
23			SPACE			SPACE			24
25			SPACE			SPACE			26
27			SPACE			SPACE			28
29			SPACE			SPACE			30

TOTAL CONNECTED LOAD(KVA) 8.6 DEMAND LOAD(KVA) 6.4

* PROVIDE WITH ISOLATED GROUND BUS AND 200% NEUTRAL

PANEL P-2(2) MOUNT SURFACE LOCATION ELECT CLOSET MCB **

VOLT 208/120 PHASE 3 WIRES 5 AIC 10,000 BUS 100A

CIR. NO.	TRIP AMPS	NO. POLES	LOAD DESCRIPTION	CON. LOAD VA	CON. LOAD VA	LOAD DESCRIPTION	TRIP AMPS	NO. POLES	CIR. NO.
1	20	1	LTS - MEDIC BREIFING RM	928	812	LTS - EXAM RM/EKG/STO	20	1	2
3	20	1	LTS - LOBBY/CLOSET	838	734	LTS - LAB	20	1	4
5	20	1	LTS - MEDIC WAIT RM	1148	833	LTS - TOILETS/EXAM RMS	20	1	6
7	20	1	LTS - MEDIC ADMIN	1176	820	LTS - MALE ORTHO	20	1	8
9	20	1	LTS - HQ DMIN	1176	580	LTS - HALLWAY	20	1	10
11	20	1	LTS - VISION/AUDIO	1044	1004	LTS - TOILETS/BAG RM	20	1	12
13	20	1	LTS-FRONT/COLUMNS(***)	456	750	LTS - DRIVEWAY (***)	20	1	14
15	20	1	LTS - FLAG/FRONT (***)	250	500	LTS - BOLLARD (***)	20	1	16
17	20	1	LTS-OUT/PERIMETER (***)	510	750	LTS - PARKING LOT (***)	20	1	18
19	20	1	SPARE	0		SPACE			20
21	20	1	SPARE	0		SPACE			22
23	20	1	SPARE	0		SPACE			24
25			SPACE			SPACE			26
27			SPACE			SPACE			28
29			SPACE		250	LTS - EXIT SIGNS	20	1	30

TOTAL CONNECTED LOAD(KVA) 14.6 DEMAND LOAD(KVA) 14.6

** FED-THRU FROM PNL P-2(1)
*** VIA ASTRONOMIC TIMER

PANEL PT-2 MOUNT SURFACE LOCATION ELECT CLOSET MCB 40A

VOLT 208/120 PHASE 3 WIRES 5 (*) AIC 10,000 BUS 100A

CIR. NO.	TRIP AMPS	NO. POLES	LOAD DESCRIPTION	CON. LOAD VA	CON. LOAD VA	LOAD DESCRIPTION	TRIP AMPS	NO. POLES	CIR. NO.
1	20	1	IG RCPT - BREIFING RM	880		SPACE			2
3	20	1	IG RCPT - MEDICAL ADMIN	660		SPACE			4
5	20	1	IG RCPT - MEDICAL ADMIN	880		SPACE			6
7	20	1	IG RCPT - MED NCO VISION	880		SPACE			8
9	20	1	IG RCPT - AUDIO FEM ORTHO/EXAM RM	1320		SPACE			10
11	20	1	IG RCPT - EXAM RMS/EKG	1320		SPACE			12
13	20	1	IG RCPT - LAB	880		SPACE			14
15	20	1	IG RCPT - MALE ORTHO MED OFFICER/EXAM RM	1320		SPACE			16
17	20	1	SPARE	0		SPACE			18
19	20	1	SPARE	0		SPACE			20
21	20	1	SPARE	0		SPACE			22
23			SPACE			SPACE			24
25			SPACE			SPACE			26
27			SPACE			SPACE			28
29			SPACE			SPACE			30

TOTAL CONNECTED LOAD(KVA) 8.4 DEMAND LOAD(KVA) 6.3

* PROVIDE WITH ISOLATED GROUND BUS AND 200% NEUTRAL

PANEL P-1(2) MOUNT SURFACE LOCATION MIRS/COMM MCB **

VOLT 208/120 PHASE 3 WIRES 5 AIC 42,000 BUS 100A

CIR. NO.	TRIP AMPS	NO. POLES	LOAD DESCRIPTION	CON. LOAD VA	CON. LOAD VA	LOAD DESCRIPTION	TRIP AMPS	NO. POLES	CIR. NO.
1	20	1	LTS - SUPPLY RM	714	804	LTS - HALLWAY/TEST RM	20	1	2
3	20	1	LTS - REAR HALLWAY	1071	833	LTS - ASVAB TEST RM	20	1	4
5	20	1	LTS - TOILETS	1148	833	LTS - TESTING ADMIN	20	1	6
7	20	1	LTS - LOUNGE/MAIL RM	800	0	LTS - TEST STO/SCORE	20	1	8
9	20	1	LTS - HQ DMIN	962	0	SPARE	20	1	10
11	20	1	LTS - COMMANDER'S OFF BUDGET/CONF RM	1071	0	SPARE	20	1	12
13	20	1	LTS - TRAVEL/SYSTEMS ADMIN/MIRS-COMM RM	833		SPACE			14
15	20	1	LTS - PROCESS/OPER'N	595		SPACE			16
17	20	1	LTS - PROCESS/OPER'N ADMIN	1309		SPACE			18
19	20	1	SPARE	0		SPACE			20
21	20	1	SPARE	0		SPACE			22
23	20	1	SPARE	0		SPACE			24
25			SPACE			SPACE			26
27			SPACE			SPACE			28
29			SPACE			SPACE			30

TOTAL CONNECTED LOAD(KVA) 11.6 DEMAND LOAD(KVA) 11.6

** FED-THRU FROM PNL P-1(1)

US Army Corps of Engineers
New York District

Symbol	Description	Date	App.

U.S. ARMY ENGINEER DISTRICT
CORPS OF ENGINEERS
NEW YORK, NEW YORK

Designed by: | Date: | Size: | Rev.:
Dwn by: | Ckd by: | Drawing file no.:
Reviewed by: | Drawing code:
Submitted by: | Plot date: 19-NOV-2004 16:08 | Plot by: eijelmwe | Scale: AS&NOTED

File name: S:\Benson\military\Niagara Falls\MEPS\Electrical\DWG's\Admin\Elec\Dwg\E-12\Sched3.dgn

PN 58873
MILITARY ENTRANCE PROCESSING STATION (MEPS)
NIAGARA FALLS, NY

SCHEDULES

Sheet reference number:
E–12

Submitted by: eijelmwe
Path: S:\Benson\military\Niagara Falls\MEPS\Electrical\DWG's\Admin\Elec\Dwg\E-12\Sched3.dgn
Plot Date: 19-NOV-2004 16:08

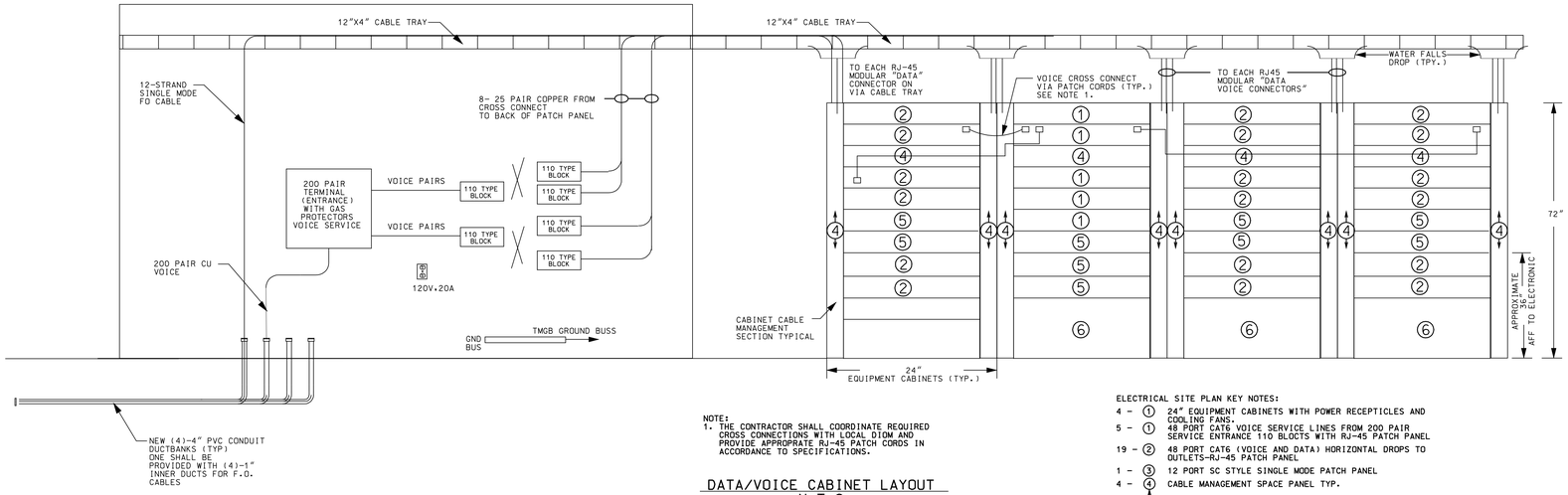

NOTE:
1. THE CONTRACTOR SHALL COORDINATE REQUIRED CROSS CONNECTIONS WITH LOCAL DIOM AND PROVIDE APPROPRIATE RJ-45 PATCH CORDS IN ACCORDANCE TO SPECIFICATIONS.

DATA/VOICE CABINET LAYOUT
N.T.S.

ELECTRICAL SITE PLAN KEY NOTES:

4 -	1	24" EQUIPMENT CABINETS WITH POWER RECEPTICLES AND COOLING FANS.
5 -	1	48 PORT CAT6 VOICE SERVICE LINES FROM 200 PAIR SERVICE ENTRANCE 110 BLOCTS WITH RJ-45 PATCH PANEL
19 -	2	48 PORT CAT6 (VOICE AND DATA) HORIZONTAL DROPS TO OUTLETS-RJ-45 PATCH PANEL
1 -	3	12 PORT SC STYLE SINGLE MODE PATCH PANEL
4 -	4	CABLE MANAGEMENT SPACE PANEL TYP.
8 -	4	CABLE MANAGEMENT SPACE IN CABINETS TYP.
4 -	5	EQUIPMENT SPACE (DATA)
3 -	6	POWER EQUIPMENT SPACE (SUCH AS UPS ETC.)

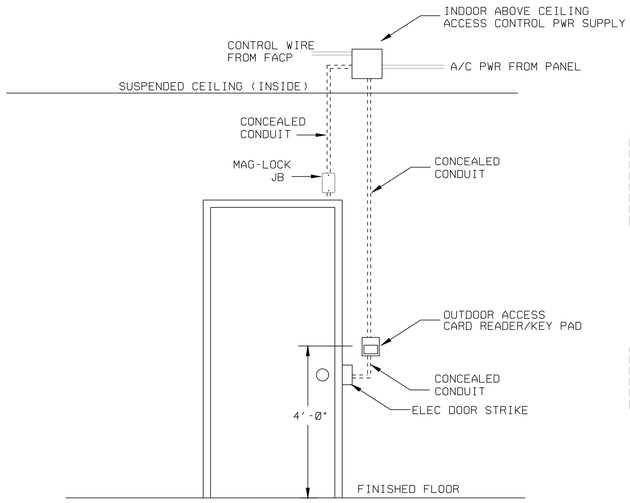

EQUIPMENT ARRANGEMENT DIAGRAM

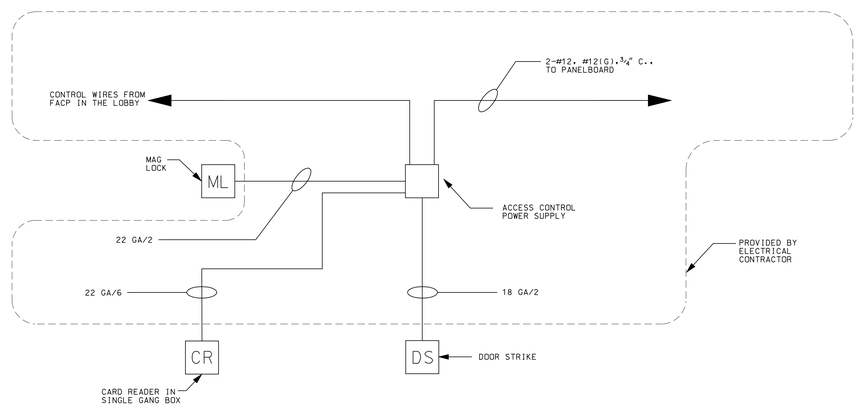

BLOCK DIAGRAM

3
E2 E13

DOOR ACCESS SYSTEM DETAIL
N.T.S.

NOTES:

1. RACEWAY RUNS SHALL BE CONCEALED.
2. IN THE EVENT OF A POWER LOSS OR THE ACTIVATION OF THE FACP, MAGNETIC LOCK AND MAGNETIC DOOR STRIKE SHALL DIS-ENGAGE.
3. DETAIL SHOWN INDICATES FACING DOOR FROM OUTSIDE OF THE BUILDING.

US Army Corps of Engineers
New York District

Symbol	Description	Date	Appr.

U.S. ARMY ENGINEER DISTRICT
CORPS OF ENGINEERS
NEW YORK, NEW YORK

Designed by:
Dwn by: Ckd by:
Reviewed by:
Submitted by:
Date:
Drawing file no.:
Drawing code:
Pnd date: 19-NOV-2004 16:08
Plot by: eijelmwe
Scale: AS NOTED
Size: Rev.:
File name: S:\Benson\military\Niagara Falls\MEPS\Electrical\DWs\Submits\Electrical\E-32cover.dgn

MILITARY ENTRANCE PROCESSING STATION (MEPS)
NIAGARA FALLS, NY
PN 58673

COMMUNICATION EQUIPMENT

Sheet reference number:
E–13

Submitted by: eijelmwe
Plot Date: 19-NOV-2004 16:08
S:\Benson\military\Niagara Falls\MEPS\Electrical\Submits\Electrical\Niagara Fall AFB MEPS Electrical 32cover.dgn

AL DATUM

M BASED ON NAVD 88

MON. NO. 6
ELEV. = 599.31'
NORTHING = 1137003.0782
EASTING = 1053375.8387

US Army Corps of Engineers
New York District

LEGEND

- LIGHT POLE
- FLAG POLE
- DECIDUOUS TREE
- CONIFEROUS TREE
- CENTERLINE (EXISTING)
- STM — STORM LINE
- SEW — SEWER LINE
- GAS — GAS LINE
- COM — COMMUNICATION LINE
- LIFU — LIQUID FUEL
- ELEC — ELECTRIC POLE WITH OVERHEAD WIRES
- W — WATER LINE

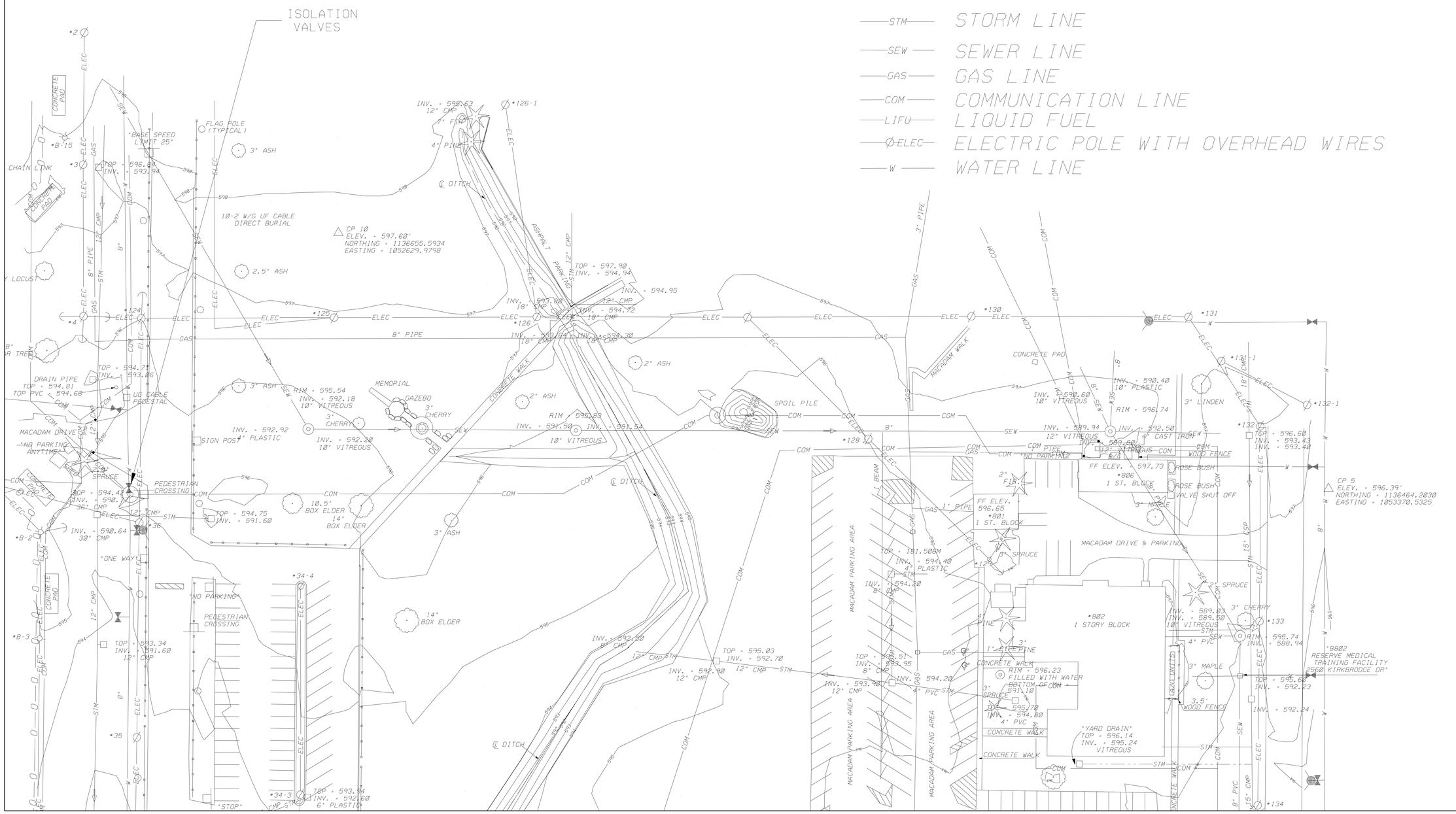

Symbol	Description	Date	Appr.

U.S. ARMY ENGINEER DISTRICT
CORPS OF ENGINEERS
NEW YORK, NEW YORK

Designed by: | Date: | Size: | Rev.:
Dwn by: | Ckd by: | Drawing file no.:
Reviewed by: | Drawing code:
Submitted by: | Plot date: 19-NOV-2004 16:01 | Plot by: e3jenmee | Scale: 1(PRINT)=20(MODEL)
File name: S:\environmental\Niagara Falls\ER\MISC\R-01.dgn

PN 58873
MILITARY ENTRANCE PROCESSING STATION (MEPS)
NIAGARA FALLS, NY

SITE SURVEY

Sheet reference number:
R-1

Plot Dates: 19-NOV-2004 16:01
Submitted by: e3jenmee
S:\Fisher-Kenmitzer-y\Niagara Falls\ER\MISC\R-01.dgn

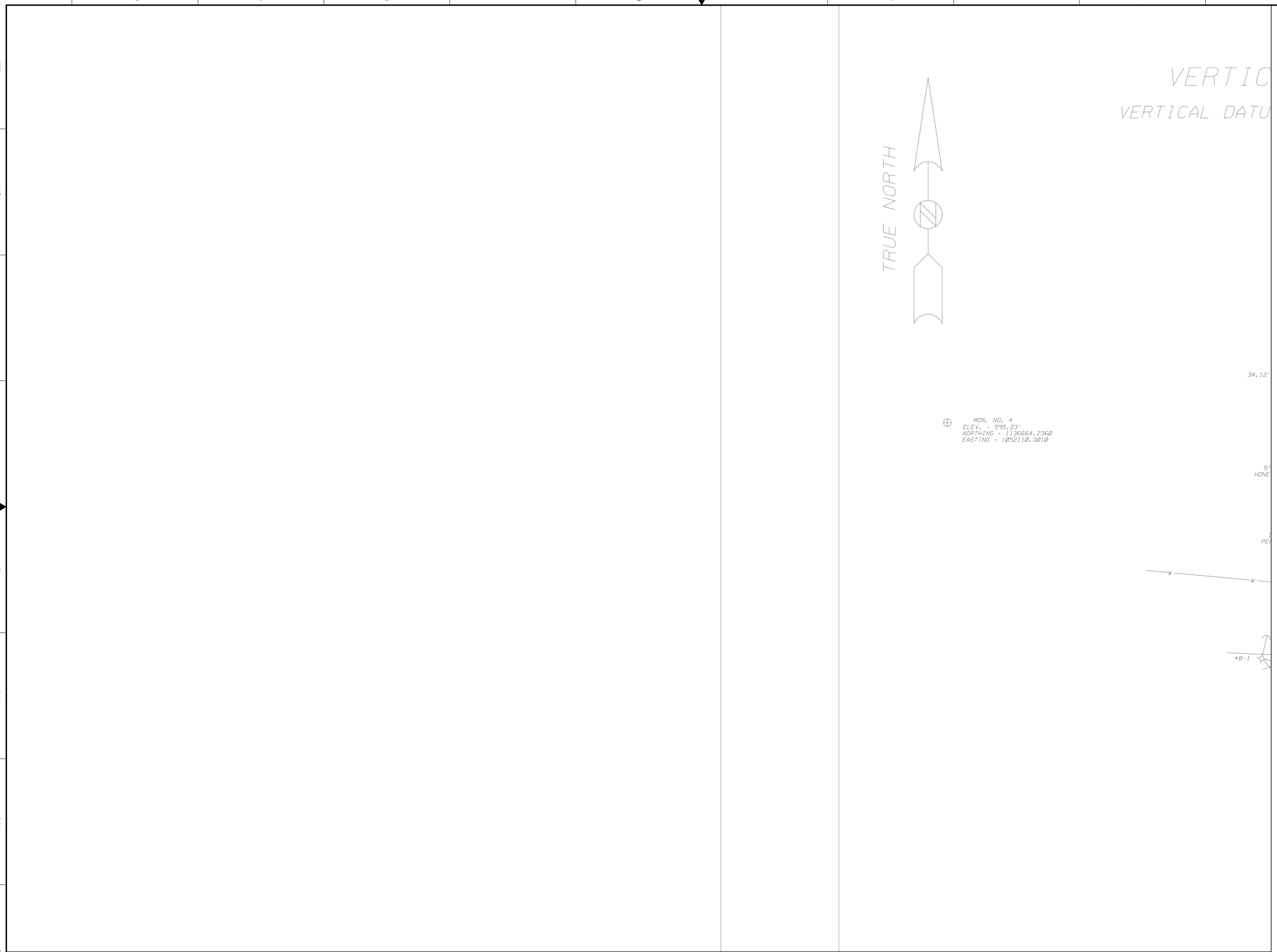

US Army Corps of Engineers
New York District

Symbol	Description	Date	Appr.

U.S. ARMY ENGINEER DISTRICT
CORPS OF ENGINEERS
NEW YORK, NEW YORK

Designed by:
Dwn by:
Ckd by:
Reviewed by:
Submitted by:
Date:
Size:
Rev.:
Drawing file no.:
Drawing code:
Plot date: 19-NOV-2004 16:01
Plot by: eJlemme
Scale: 1:1000:1:100000

File name: S:\Tiemann\military\Niagara Fall AFB\MEPS\Civil\R2.dgn

PN 59873
MILITARY ENTRANCE PROCESSING STATION (MEPS)
NIAGARA FALLS, NY

SITE SURVEY

Sheet reference number:
R–2

Submitted by: eJlemme Plot Date: 19-NOV-2004 16:01
S:\filer\admin\military\Niagara Fall AFB\MEPS\Civil\R2.dgn

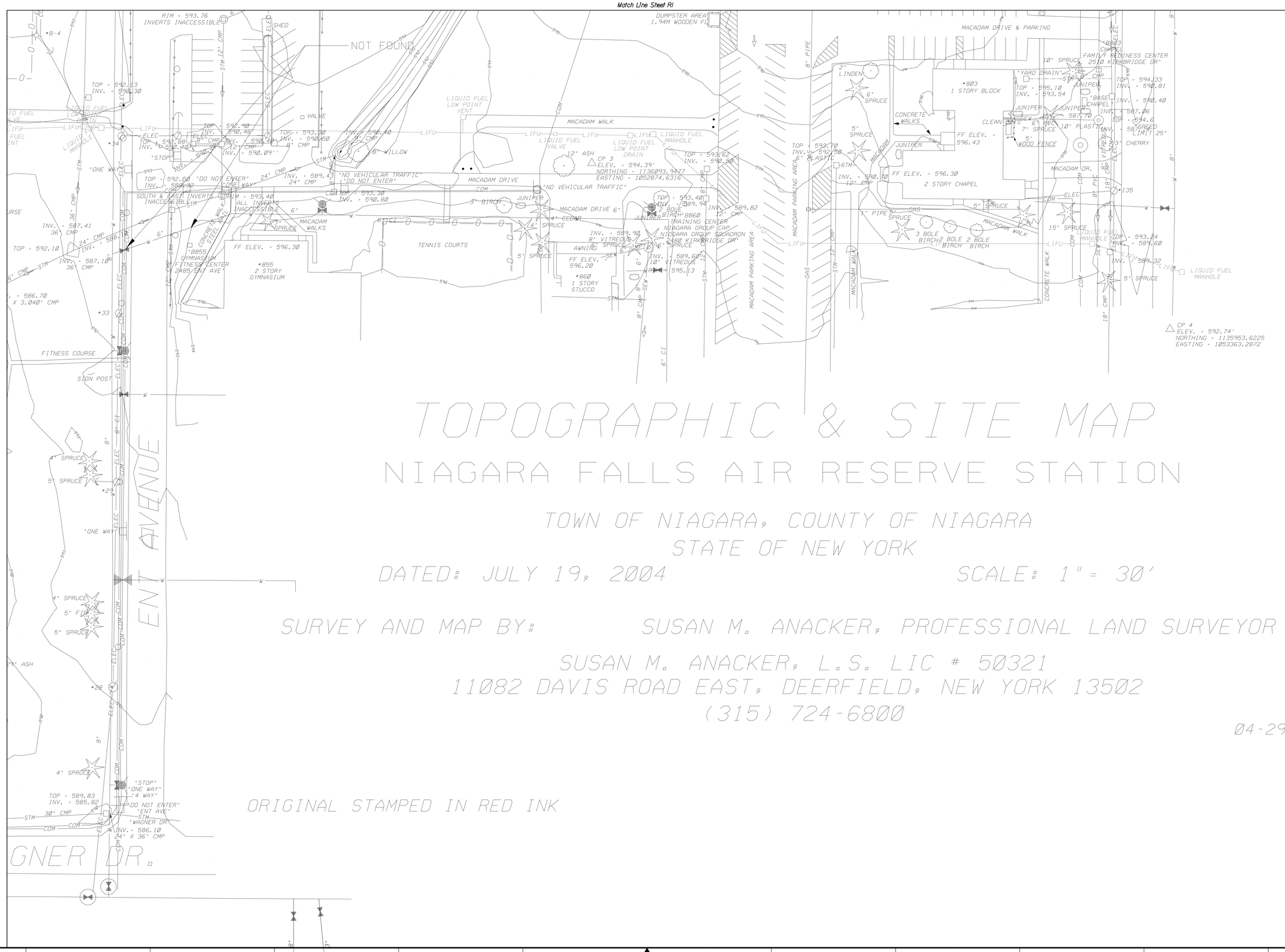

TOPOGRAPHIC & SITE MAP

NIAGARA FALLS AIR RESERVE STATION

TOWN OF NIAGARA, COUNTY OF NIAGARA
STATE OF NEW YORK

DATED: JULY 19, 2004 SCALE: 1" = 30'

SURVEY AND MAP BY: SUSAN M. ANACKER, PROFESSIONAL LAND SURVEYOR

SUSAN M. ANACKER, L.S. LIC # 50321
11082 DAVIS ROAD EAST, DEERFIELD, NEW YORK 13502
(315) 724-6800

04-29

ORIGINAL STAMPED IN RED INK

US Army Corps of Engineers
New York District

Symbol	Description	Date	Appr.

Designed by: | Date: | Size: | Rev.:
Dwn by: | Ckd by: | Drawing file no.:
Reviewed by: | Drawing code:
Submitted by: | Plot date: 19-NOV-2004 16:01 afdemoss | Plot by: | Scale: 1:1(1"=30'0")
File name: S:\Moscow\military\Niagara Fall\FIELWERK\CAD\R3.dgn

U.S. ARMY ENGINEER DISTRICT
CORPS OF ENGINEERS
NEW YORK, NEW YORK

PN 58673
MILITARY ENTRANCE PROCESSING STATION (MEPS)
NIAGARA FALLS, NY

SITE SURVEY

Sheet reference number:
R–3

Submitted by: e3jettmee
S:\Office\military\Niagara Fall AFRMEPS\FIELWERK.dgn
Plot Date 19-NOV-2004 (6:01)

Submitted by: e3jetmwe Plot Date: 19-NOV-2004 16:02
S:#fileroom#military#Niagara Fall AFB#MEPS#Civil#R4.dgn

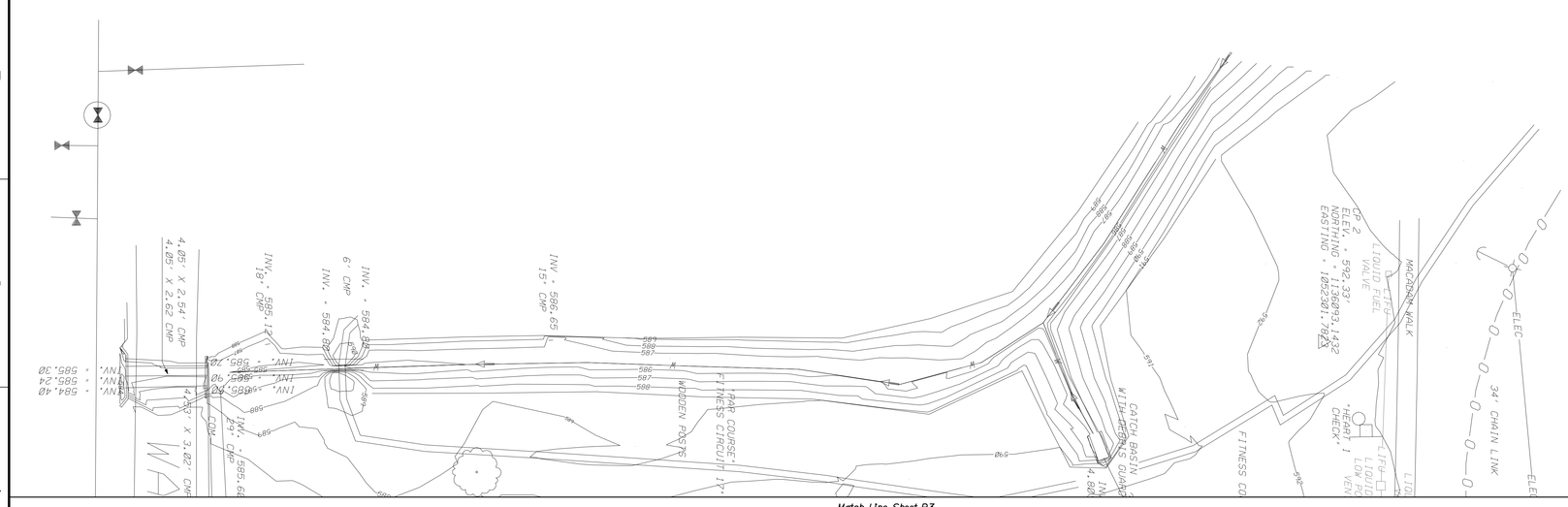

Sheet reference number: R-4

PN 59873
MILITARY ENTRANCE PROCESSING STATION (MEPS)
NIAGARA FALLS, NY

SITE SURVEY

U.S. ARMY ENGINEER DISTRICT
CORPS OF ENGINEERS
NEW YORK, NEW YORK

Designed by:		Date:	Size: / Rev.:
Dwn by:	Ckd by:	Drawing file no.:	
Reviewed by:		Drawing code:	
Submitted by:		Plot date: 19-NOV-2004 16:02 Plot by: e3jetmwe Scale: 1:181021.000000	

File name: S:\fileroom\military\Niagara Fall AFB\MEPS\Civil\R4.dgn

Symbol	Description	Date	Appr.

US Army Corps of Engineers
New York District

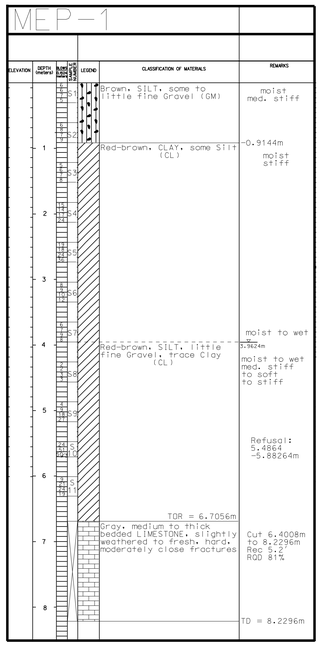

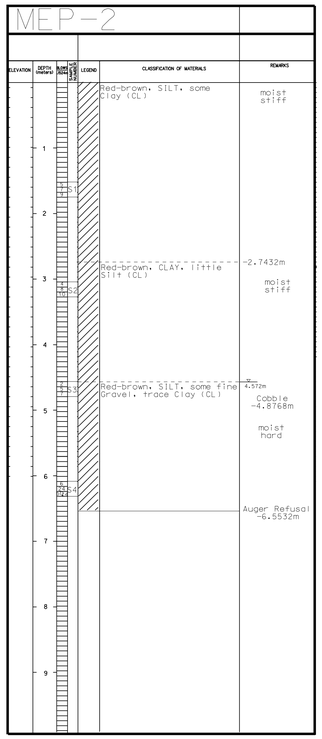

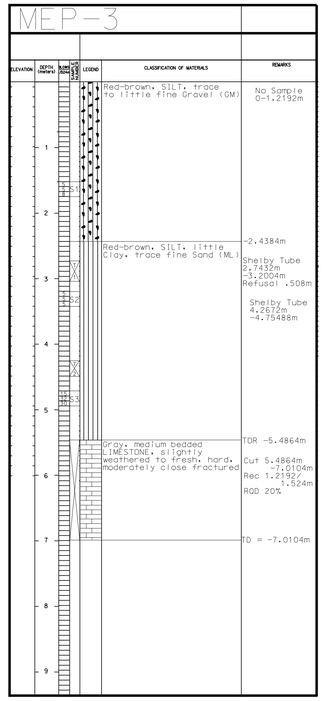

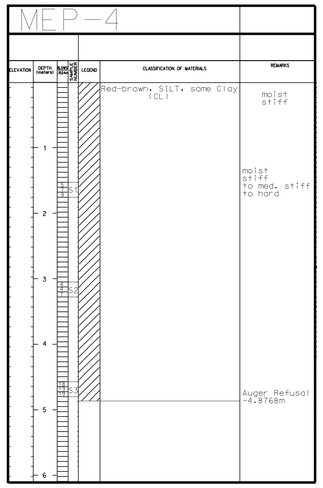

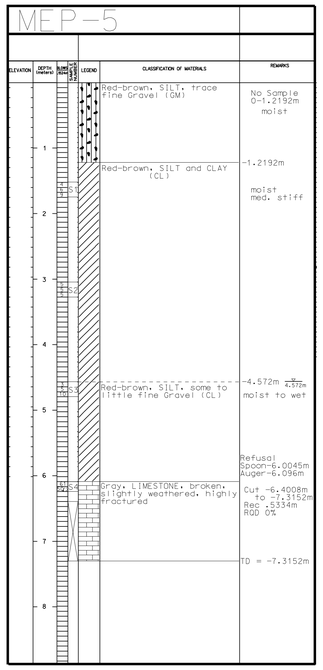

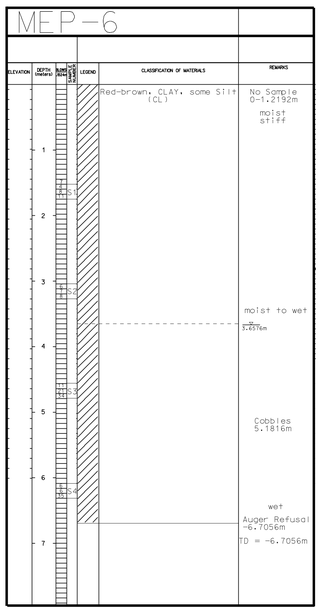

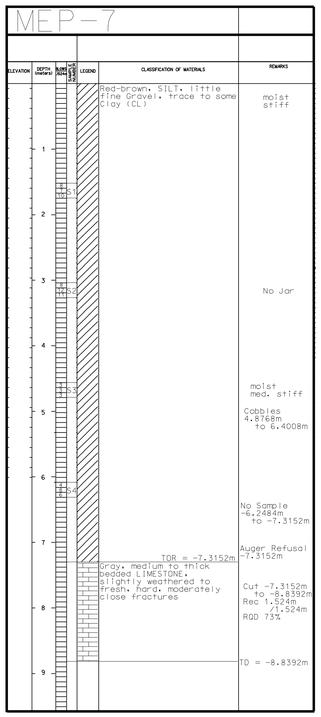

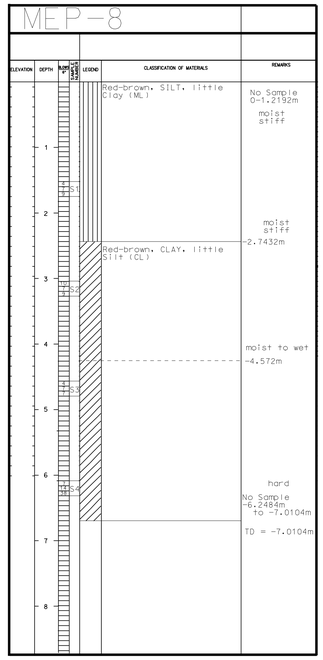

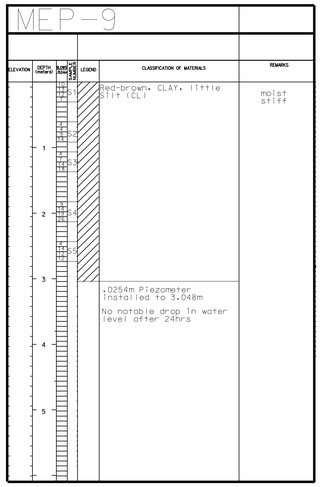

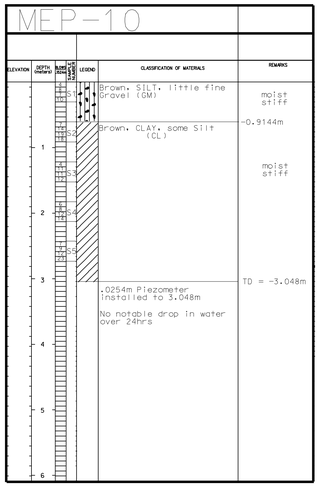

SUBSURFACE EXPLORATION NOTES

1. NOTES:

FOR BORING LOCATIONS SEE PLAN SHEETS.

SOILS WERE VISUALLY CLASSIFIED ACCORDING TO THE "UNIFIED SOIL CLASSIFICATION SYSTEM."

SUBSURFACE EXPLORATION WAS CONDUCTED BY NY DISTRICT, U.S. ARMY CORPS OF ENGINEERS

BLOWS/FT ON SAMPLE SPOON, 2 INCH O.D. AND 1.375 INCH I.D. USING 140 POUND HAMMER DROPPED 30 INCHES, EXCEPT WHERE OTHERWISE NOTED.

2. CLASSIFICATION AND TERMS

BEDROCK: NATURAL SOLID MINERAL MATTER (ROCK) OCCURRING IN GREAT THICKNESS AND EXTENT IN ITS NATURAL LOCATION. NORMALLY UNDERLIES SOIL.

SOILS: SEDIMENT OR OTHER UNCONSOLIDATED PARTICLES PRODUCED BY THE PHYSICAL AND CHEMICAL WEATHERING OF ROCKS, AND WHICH MAY CONTAIN ORGANIC MATTER.

BOULDER ... larger than 203mm

COBBLE OR SMALL STONE ... 203mm-76mm

GRAVEL: coarse...76mm to 19.1mm
medium...19.1mm to 4.76 mm

SAND: coarse...4.76 mm to 2 mm
medium...2 mm to 0.42 mm
fine.....0.42 mm to 0.074 mm

SILT and CLAY...finer than 0.074 mm

Major component is shown with all letters CAPITALIZED.

Minor component % terms of total sample are as follows:

and.....40 to 50%
some....40 to 20%
little..20 to 10%
trace...10 to 1%

3. ABBREVIATIONS

WOR = WEIGHT OF RODS WOH = WEIGHT OF HAMMER
NR = No Recovery NS = Insufficient Sample

TABLE OF SOIL TESTING - ABBREVIATIONS

USCS = Unified Soil Classification Symbol
% G = Percent Gravel-sized particles
% S = Percent sand-sized particles
% F = Percent fines (silt and clay)
LL = Liquid Limit PL = Plastic Limit
PI = Plasticity Index (LL- PL)
% H2O = Water Content (Wt H2O / Wt Dry Soil)
SG = Specific Gravity

4. DATE OF EXPLORATION

Borings completed June 2004

LEGEND

- Inorganic to slightly organic SILT with slight plasticity
- Inorganic CLAY with low to medium plasticity
- Silty GRAVEL or GRAVEL-SAND-SILT mixtures
- LIMESTONE - Moderately light, microscopic, crystalline sedimentary rock composed primarily of calcite minerals

US Army Corps of Engineers New York District

Symbol	Description	Date	Appr.

Started

Designed by: | Date: | Size: | Rev.:
Dwn by: | Ckd by: | Drawing file no.:
Reviewed by: | Drawing code:
Submitted by: | Plot date: 19-NOV-2004 15:57 | Plot by: Anderson | Scale: 0.0000000000

U.S. ARMY ENGINEER DISTRICT
CORPS OF ENGINEERS
NEW YORK, NEW YORK

File name: S:\Mission\Military\Niagara Falls AFB\MEP\Sheet\Mep\Sup\MEP-S.dgn

PN 58673
MILITARY ENTRANCE PROCESSING STATION (MEPS)
NIAGARA FALLS, NY

SUBSURFACE EXPLORATION

Sheet reference number: R-5

Submitted by: e3jamwe
S:\Mission\Military\Niagara Falls AFB\MEP\Sheet\Mep\Sup\MEP-S.dgn
Plot Date: 19-NOV-2004 15:57