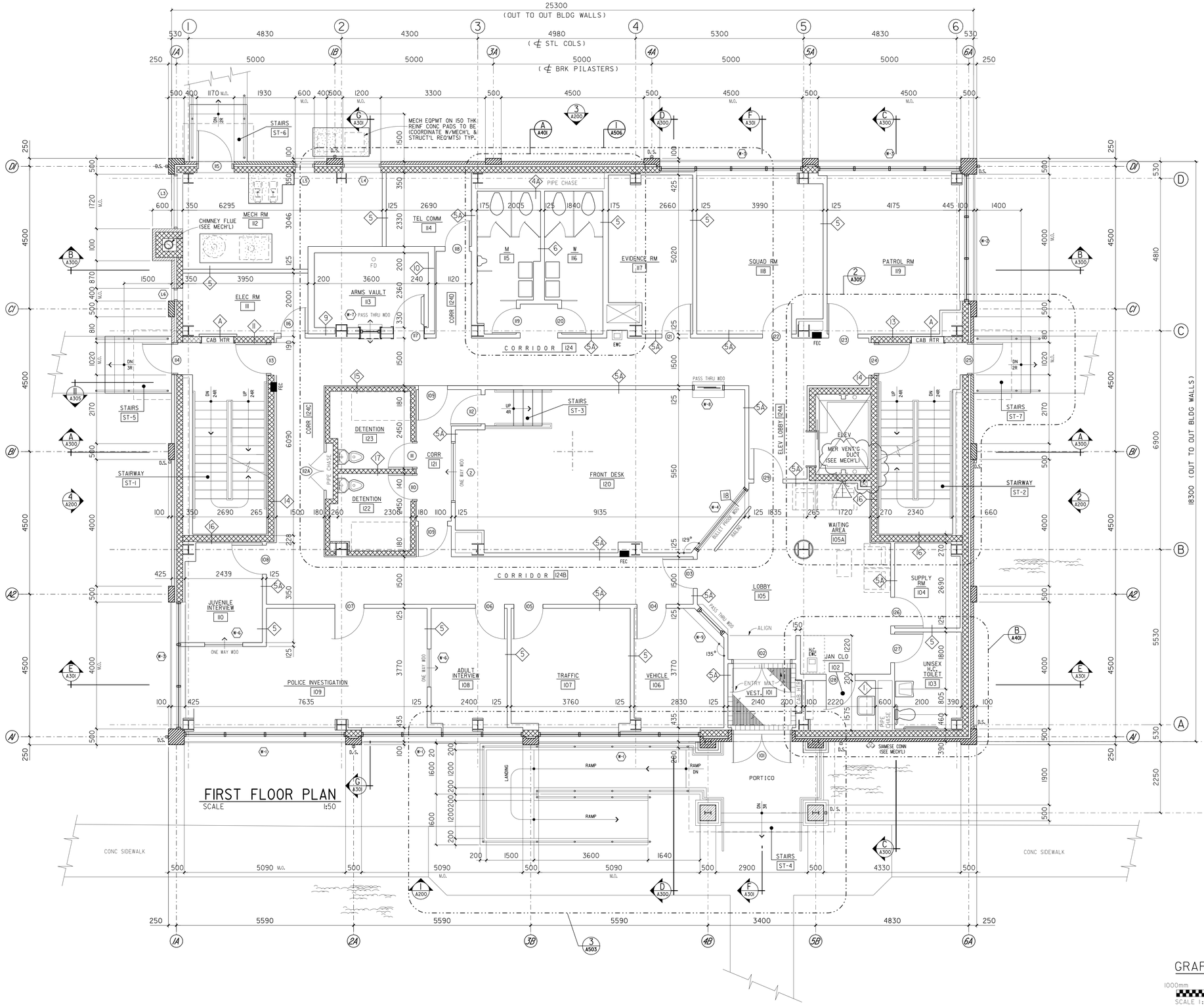

GRAPHIC SCALE

1000mm 0 1M 2M 3M 4M 5M

SCALE 1:50

NOTE: ALL DIMENSIONS SHOWN ARE IN MILLIMETERS.

TRUE NORTH

PROJECT NORTH

US Army Corps of Engineers
New York District

Symbol	Description	Date	Appr.
1	ADDED MER. VENT DUCT		

Designed by:
Date:
Size:
Rev:
Dwn by:
Ckd by:
Drawing file no.:
Drawing code:
Reviewed by:
Pltd date: 26-JAN-2009 14:21
Submitted by:
Plot by: e0dwhwb
File name: S:\Division\Military\Installation\MPBs\Architecture\MPBs A-100.dgn
Size: 6000x3000

U.S. ARMY ENGINEER DISTRICT
CORPS OF ENGINEERS
NEW YORK, NEW YORK

PN 82224
MILITARY POLICE STATION
FORT HAMILTON, NY

FIRST FLOOR PLAN

Sheet reference number:
A–101

Submitted by: e3endfwb
S:\Division\Military\Plot Files\Installation\MPBs\Architecture\MPBs A-100.dgn
Plot Date: 26-JAN-2009 14:21

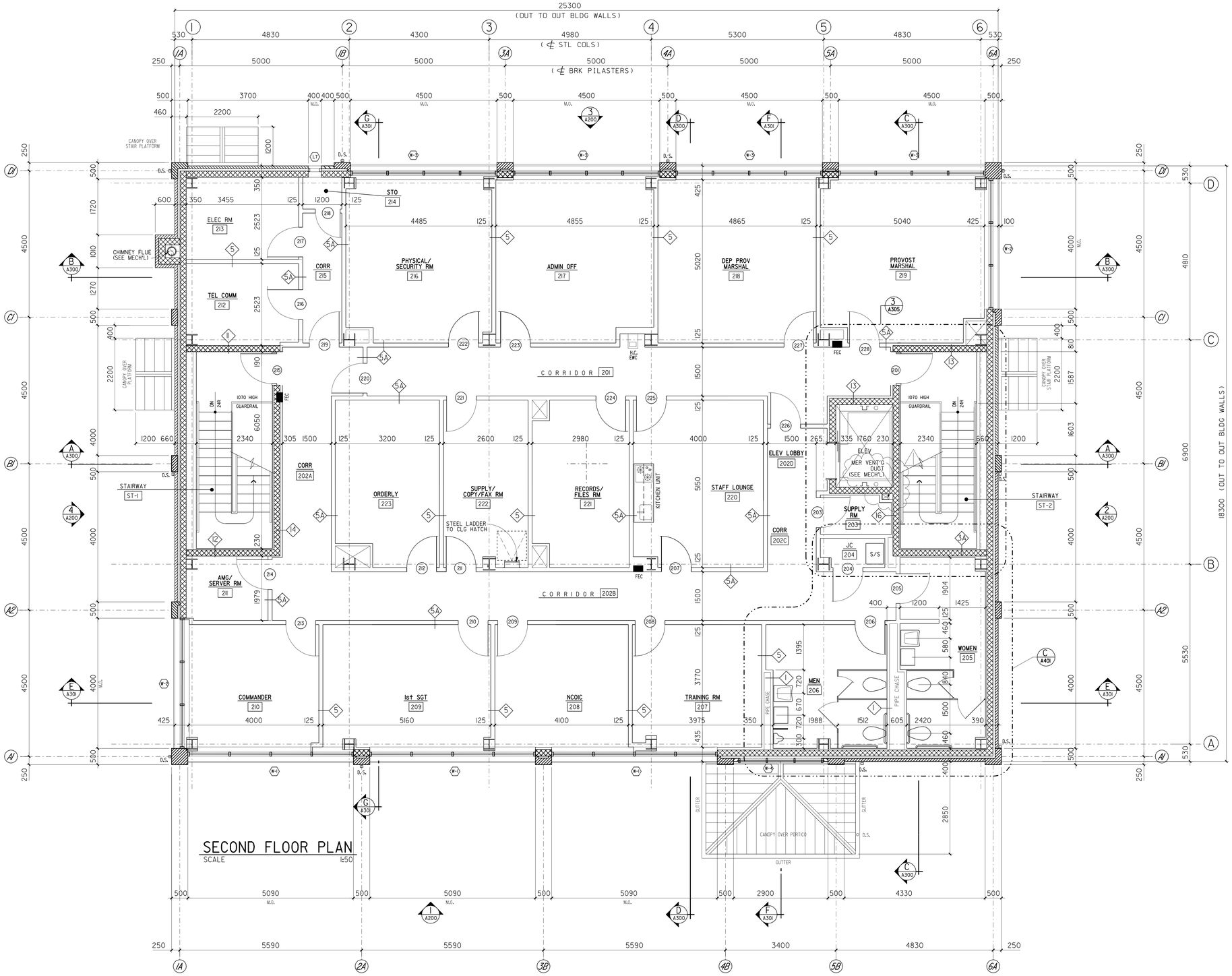

SECOND FLOOR PLAN

SCALE 1:50

GRAPHIC SCALE

1000mm 0 1M 2M 3M 4M 5M

SCALE 1:50

NOTE: ALL DIMENSIONS SHOWN ARE IN MILLIMETERS.

TRUE NORTH

PROJECT NORTH

US Army Corps of Engineers
New York District

Symbol	Description	Date	Appr.
1	ADDED MER VENT DUCT		

Designed by:
Dwn by:
Ckd by:
Reviewed by:
Submitted by:
Date:
Drawing file no.:
Drawing code:
Plot date: 26-JAN-2009 14:21
Plot by: e3dendwb
Size
Rev.
File name: S:\Missions\Military\Fort Hamilton\MPS\Architectural\MPS_A-102.dgn

U.S. ARMY ENGINEER DISTRICT
CORPS OF ENGINEERS
NEW YORK, NEW YORK

PN 82224
MILITARY POLICE STATION
FORT HAMILTON, NY

SECOND FLOOR PLAN

Sheet reference number:
A-102

Submitted by: e3endwb
S:\Missions\Military\Fort Hamilton\MPS\Architectural\MPS_A-102.dgn
Plot Date: 26-JAN-2009 14:21

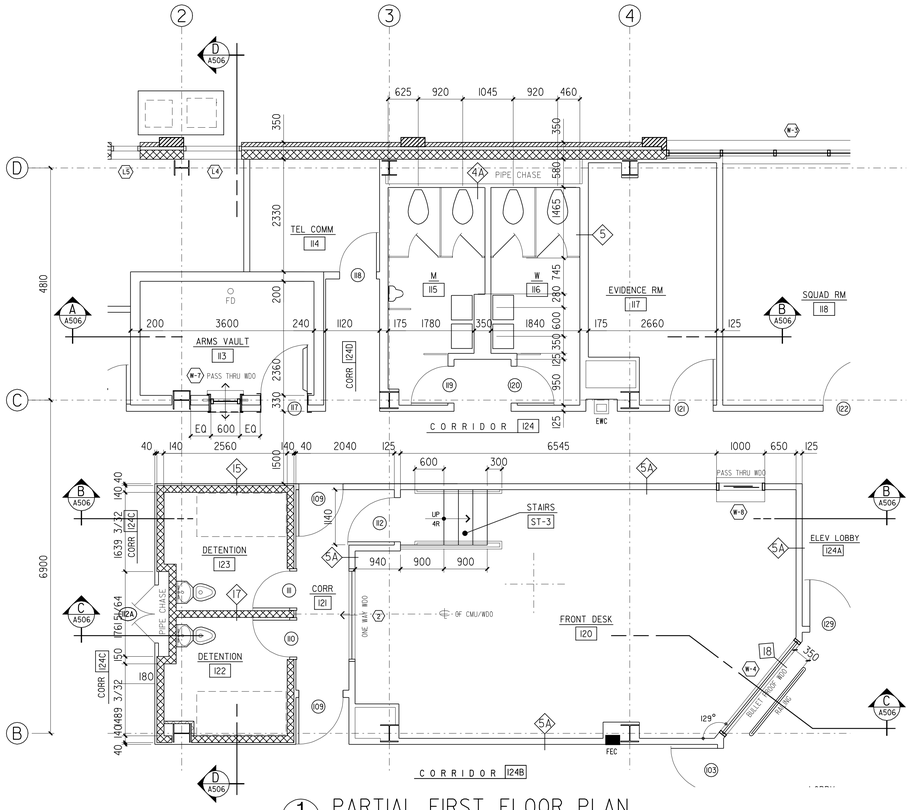

1 A506 PARTIAL FIRST FLOOR PLAN
SCALE 1:50mm

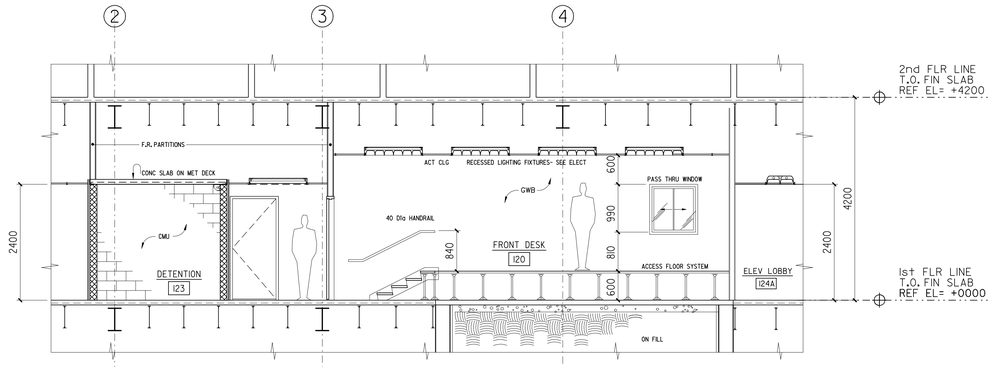

B A506 SECTION THRU "B"-"B"
SCALE 1:50mm

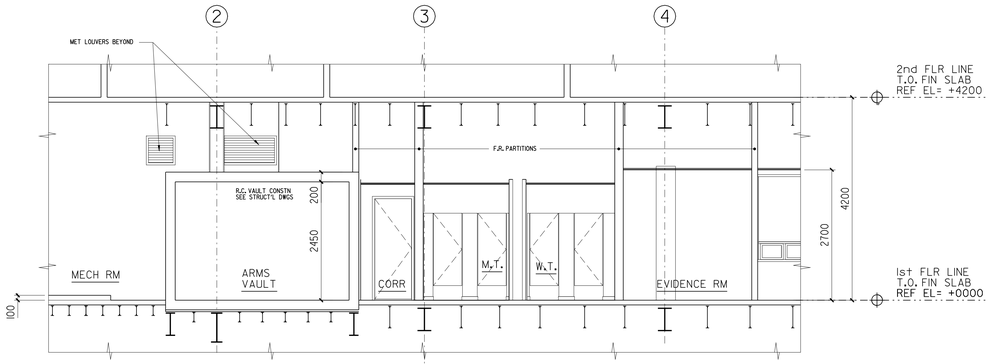

A A506 SECTION THRU "A"-"A"
SCALE 1:50mm

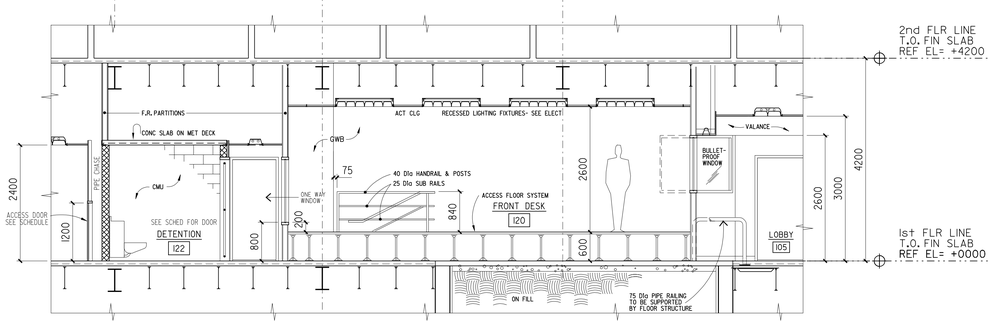

C A506 SECTION THRU "C"-"C"
SCALE 1:50mm

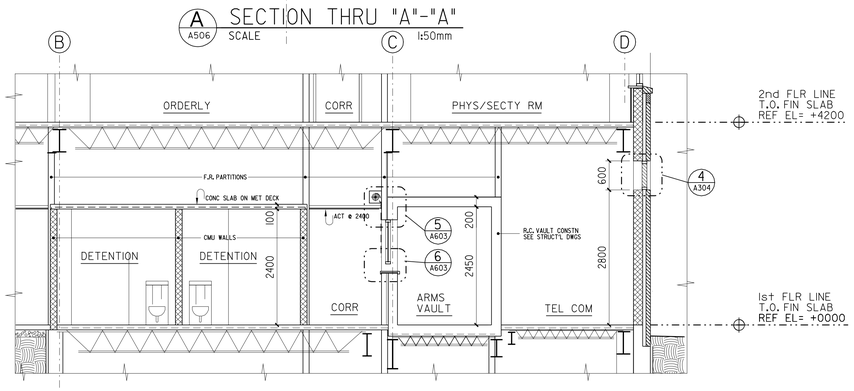

D A506 SECTION THRU "D"-"D"
SCALE 1:50mm

US Army Corps of Engineers
New York District

Symbol	Description	Date	Appr.

Size:	Rev:
Date:	
Drawing file no.:	
Drawing code:	
Plot date:	24-JAN-2005 15:33
Plot by:	edavidw
Scale:	0.000000x0.000000

Designed by:
Dwn by: Ckd by:
Reviewed by:
Submitted by:

U.S. ARMY ENGINEER DISTRICT
CORPS OF ENGINEERS
NEW YORK, NEW YORK

File name: J:\Missions\Military\Fort Hamilton\JobFiles\Architectural\APFile_A506.dgn

PN. 52224
MILITARY POLICE STATION
FORT HAMILTON, NY

FRONT DESK OFFICE AND DETENTION CELLS

Sheet reference number:
A–506

Submitted by: e2endfwb
pentium-dualmilitary-pc\f:\hamilton\apfc\architecture\apfc\A506.dgn
Plot Date: 24-JAN-2005 15:30

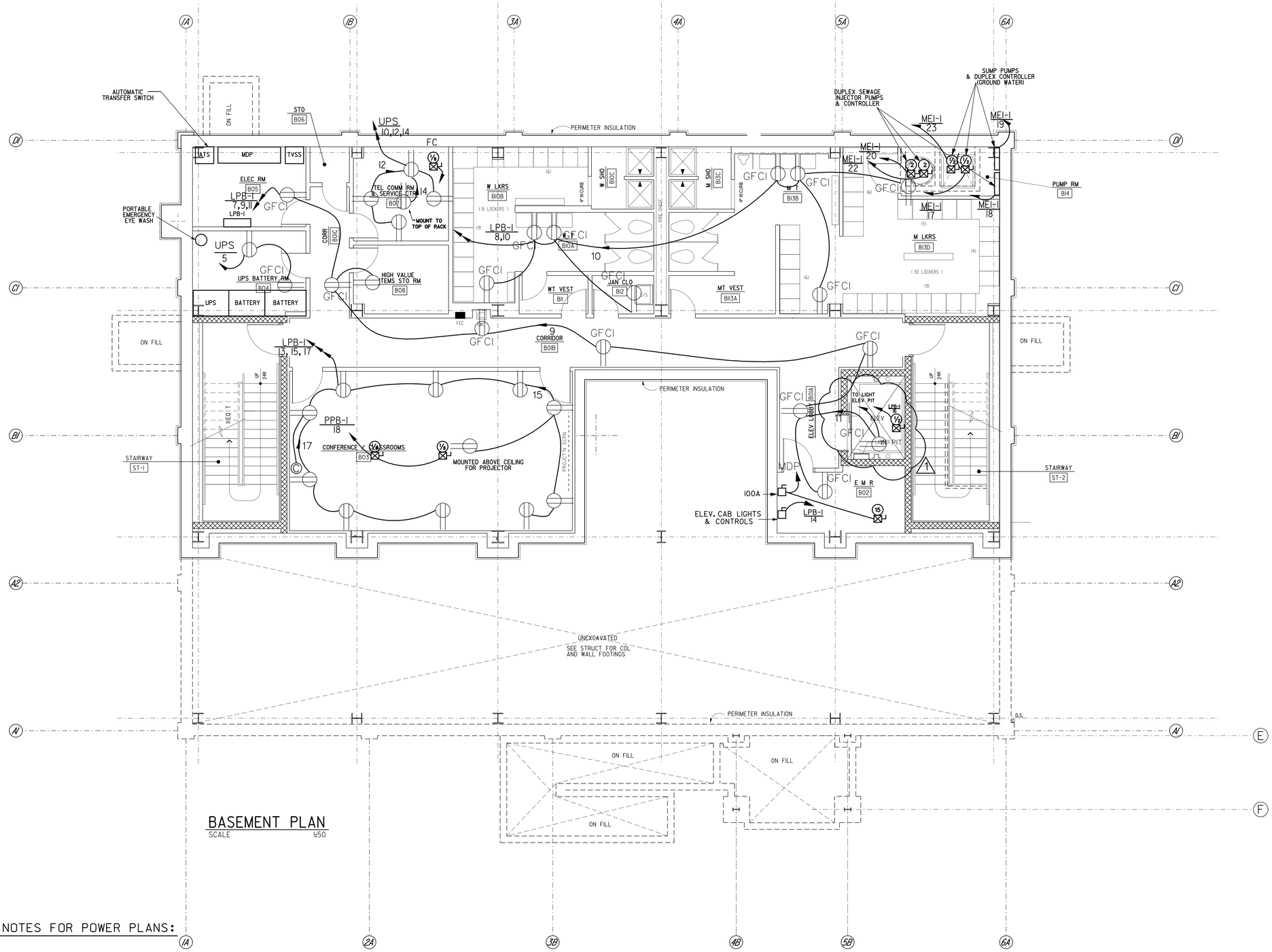

BASEMENT PLAN

SCALE 1:50

GENERAL NOTES FOR POWER PLANS:

1. LOCATION OF PANEL BOARDS, SWITCH BOARDS AND TRANSFORMERS IN THE ELECTRICAL ROOMS ARE APPROXIMATE. CONTRACTOR SHALL COORDINATE WITH OTHER WORK.
2. PROVIDE GROUND CONDUCTOR IN ALL RECEPTACLE CIRCUITS. PROVIDE APPLICABLE NUMBER OF WIRES FOR CONTROL AND CIRCUITING SHOWN.
3. ALL RECEPTACLES CIRCUITS SHALL BE PROVIDED WITH A DEDICATED NEUTRAL CONDUCTOR.
4. CONDUIT SHALL NOT BE RUN EXPOSED ALONG BUILDING.

GRAPHIC SCALE

1000mm 0 1M 2M 3M 4M 5M

SCALE 1:50

NOTE: ALL DIMENSIONS SHOWN ARE IN MILLIMETERS.

TRUE NORTH PROJECT NORTH

US Army Corps of Engineers
New York District

Symbol	Description	Date	Appr.
1	REVISE SUMP PUMP CIRCUIT & LOCATION DRAFTED 01/20/05	01/24/05	

U.S. ARMY ENGINEER DISTRICT
CORPS OF ENGINEERS
NEW YORK, NEW YORK

Designed by: | Date: | Size: | Rev.
Dwn by: | Ckd by: | Drawing file no:
Reviewed by: | Drawing code:
Submitted by: | Plot date: 24-JAN-2005 15:30 | Plot file: admcvhrs | Scale: SC1000000000

File name: S:\Services\military\Contractors\MilPolice\Electrical\MPBs E-104.dgn

PN 52224
MILITARY POLICE STATION
FORT HAMILTON, NY

ELECTRICAL POWER BASEMENT PLAN

Sheet reference number:
E–104

Plot Date: 24-JAN-2005 15:30
Plot File: admcvhrs
Submitted by: admcvhrs
Software: microstation v8.0

PANEL LPB-1 208/120 VOLTS, 3 PHASES, 4 WIRE, 100 AMPS MLO
SURFACE MOUNTED; ALL CIRCUIT BREAKERS 22K AIC, 100 AMP FRAME 42 POLES
LOCATION: ELECTRICAL ROOM BASEMENT

I GROUND BUS
200 % RATED NEUTRAL
ISOLATED GRD BUS
--

EQUIPMENT SERVED	ROOM NO.	CONN. KVA	TRIP AMPS	P	CKT. NO.	PH	CKT. NO.	P	TRIP AMPS	CONN. KVA	ROOM NO.	EQUIPMENT SERVED
IIGHTING	B04,B05,B06,B07	0.4	15	I	1	A	2	I	15	0.4	B08,B08A,B08B,B09	IIGHTING
	B01A,B01B,B01C,B02	0.6			3	B	4			0.3	B10-B14	
	B03	0.4			5	C	6			0.5	B15,B15A,B15B	
RECEPTACLES	B01B,B01C,B06,B09	0.7	20		7	A	8		20	1.0	B08A	RECP,HAIR DRYERS
RECEPTACLES	B01B,B01A,B02	0.7			9	B	10			1.0	B15A	RECP,HAIR DRYERS
RECEPT, LIGHTING	ELEV PIT	0.2			11	C	12					
PC, RECEPT	B03	0.7			13	A	14		20	0.5	EMR B02	ELEV. CAB LIGHTS
PC, RECEPT	B03	0.5			15	B	16	3	20	0.5	ELEVATOR PIT	SUMP PUMP
PC, RECEPT	B03	0.8			17	C						
TVSS			SEE NOTE 4	3	19	A						
						B	18	I	20			SPARE
						C	20	3	20	2.0	EXTERIOR	GATE OPERATOR
SPACE					21	A						
					23	B						
					25	C	22	I				SPACE
					27	A	24					
					29	B	26					
					31	C	28					
					33	A	30					
					35	B	32					
					36	C	34					

TOTAL CONNECTED KVA 12.7

1

PANEL LP1-1 208/120 VOLTS, 3 PHASES, 4 WIRE, 100AMPS MAIN CIRCUIT BREAKER
SURFACE MOUNTED; ALL CIRCUIT BREAKERS 22K AIC, 100 AMP FRAME 42 POLES
LOCATION: ELECTRICAL CLOSET FIRST FLOOR

I GROUND BUS
200 % RATED NEUTRAL
ISOLATED GRD BUS
--

EQUIPMENT SERVED	ROOM NO.	CONN. KVA	TRIP AMPS	P	CKT. NO.	PH	CKT. NO.	P	TRIP AMPS	CONN. KVA	ROOM NO.	EQUIPMENT SERVED
IIGHTING	111-114	0.5	15	I	1	A	2	I	15	0.6	108-110	IIGHTING
	124,124A-124D	0.9			3	B	4			0.5	106,107	
	115-119	1.0			5	C	6			0.6	101-105	
	East Stairs	0.4			7	A	8		20	1.0	111	UH-
	WEST STAIRS	0.4			9	B	10			0.7	110	PC,RECP
SPARE			20		11	C	12			0.7	109	
SPARE						A	14			0.7	109	
SPARE					13	B	16			0.8	108	
SPARE						C	18			0.8	107	
SPARE			20		15	A	20			0.8	106	
PC,RECP	117	0.8	20		17	B	22			0.9	101,124B,EXT	RECEPTACLES
PC,RECP	118	0.8			19	C	24			0.4	EXTERIOR	RECEPTACLES
PC,RECP	119	0.8			21	A	26	2		1.7	BUILDING PERIMETER	EXT. BLDG LIGHTING
RECEPTACLES	111,112,113	0.7			23	B						
RECEPTACLES	124	0.7			25	C	28	2		1.4	BUILDING PERIMETER	EXT. BLDG LIGHTING
RECEPTACLES	115,116	1.0			27	A						
EWC	105	1.0			29	B	30	2		2.4	LOT	PARKING LOT LIGHTING
RECEPTACLES	101,102,103	0.5			31	C						
LIGHTING CONTROL	112	0.5			33	A	32	3	SEE NOTE 4			TVSS
PARKING LOT LIGHTING	LOT	2.4	20	2	35	B						
						C						

TOTAL CONNECTED KVA 26.4

PANEL UPS 208/120 VOLTS, 3 PHASES, 4 WIRE, 100 AMPS MAIN CIRCUIT BREAKER
SURFACE MOUNTED; ALL CIRCUIT BREAKERS 22K AIC, 100 AMP FRAME 42 POLES
LOCATION: FIRST FLOOR ELECTRICLA CLOSET

I GROUND BUS
200 % RATED NEUTRAL

EQUIPMENT SERVED	ROOM NO.	CONN. KVA	TRIP AMPS	P	CKT. NO.	PH	CKT. NO.	P	TRIP AMPS	CONN. KVA	ROOM NO.	EQUIPMENT SERVED
RECEPTACLES	FRONT DESK 120	0.5	20	I	1	A	2	I	15	1.0	FRONT DESK 120	LIGHTING
RECEPTACLES	FRONT DESK 120	0.5			3	B	4		20	0.6	FRONT DESK 120,121	RECEPTACLES
CCTV RECEPT	FRONT DESK 120	0.5			5	C	6			1.0	FRONT DESK 120	MOTOROLA RECEPT
SPARE					7	A	8			1.0	FRONT DESK 120	MOTOROLA RECEPT
RECEPTACLES	TEL COMM RM 114	0.7			9	B	10			0.5	MAIN COMM RM B05	RECEPTACLES
EQUIP RACK	TEL COMM RM 114	1.0			11	C	12			0.5	MAIN COMM RM B05	RECEPTACLES
RECEPTACLES	TEL COMM RM 212	0.7			13	A	14			1.0	MAIN COMM RM B05	EQUIP RACKS
EQUIP RACK	TEL COMM RM 212	1.0			15	B	16			0.8	SERVER RM 211	PC, RECEPT
BASE WIDE FIRE ALARM PANEL	FRONT DESK 120	2.0	30 L	2	17	C	18			0.8	SERVER RM 211	PC, RECEPT
						A	20			0.5	TEL COMM RM 212	SPOT COOLER
MP STATION (BLDG) FIRE ALARM PANEL	FRONT DESK 120	2.0	30 L	2	19	B	22					SPARE
						C	24	3				SPARE
AHU-2	ATTIC (SERVING 24 HR DESK AREA)	1.0	20	3	21	A						
						B						
						C	26					SPARE
SPARE			20		23	A	28					
SPARE			20		25	B	30					
SPACE					27	C	32					
					29	A	34					
					31	B	36					
					33	C	38					

TOTAL CONNECTED KVA 17.75

PANEL LP2-1 208/120 VOLTS, 3 PHASES, 4 WIRE, 100 AMPS MAIN CIRCUIT BREAKER
SURFACE MOUNTED; ALL CIRCUIT BREAKERS 22K AIC, 100 AMP FRAME 42 POLES
LOCATION: ELECTRICAL CLOSET 2ND FLOOR

I GROUND BUS
200 % RATED NEUTRAL
ISOLATED GRD BUS
--

EQUIPMENT SERVED	ROOM NO.	CONN. KVA	TRIP AMPS	P	CKT. NO.	PH	CKT. NO.	P	TRIP AMPS	CONN. KVA	ROOM NO.	EQUIPMENT SERVED
LIGHTING	212,213,215,216,217	0.9	15	I	1	A	2	I	15	1.0	220-223	LIGHTING
	218,219	0.5			3	B	4			1.0	208-211	
	201,202A,202B,202C	1.0			5	C	6			0.7	203-207	
	ATTIC	0.1			7	A	8					SPARE
SPARE			20		9	B	10		20	0.8	218	PC,RECEP
PC,RECEP	216	0.8			11	C	12			0.8	219	
	217	0.7			13	A	14					SPARE
	217	0.7			15	B	16			0.8	223	PC,RECEP
	COMR 210	0.8			17	C	18			1.0	222	COPIER
	209	0.8			19	A	20			0.4	222	FAX, RECEP
	208	0.8			21	B	22					SPARE
RECEPTACLES	RESTROOMS 205&206	1.0			23	C	24	3	SEE NOTE 4			TVSS
	ATTIC	0.4			25	A						
	201,202A,202B	0.9			27	B						
	201,202A,203,204	0.9			29	C	26	I	20	0.8	221	PC,RECEP
MICROWAVE		0.9			31	A	28			0.8	220	
REFRIG		0.9			33	B	30			0.8	207	
COUNTER		0.9			35	C	32			0.5	ELECT 213	RECEPTACLES
SPARE					37	A	34					SPACE
					39	B	36					
					41	C	38					

TOTAL CONNECTED KVA 22.4

PANEL ME1-1 208/120 VOLTS, 3 PHASES, 4 WIRE, 200 AMPS MAIN CIRCUIT BREAKER
SURFACE MOUNTED; ALL CIRCUIT BREAKERS 22K AIC, 225 AMP FRAME 42 POLES
LOCATION: ELECTRICAL CLOSET FIRST FLOOR

I GROUND BUS
100 % RATED NEUTRAL

EQUIPMENT SERVED	ROOM NO.	CONN. KVA	TRIP AMPS	P	CKT. NO.	PH	CKT. NO.	P	TRIP AMPS	CONN. KVA	ROOM NO.	EQUIPMENT SERVED
CHWP-I (3 HP)	MECH 112	3.7	20	3	1	A	2	3	20	3.7	MECH 112	CHWP-2 (3 HP)
						B						
						C						
EF-	MECH 112	1.5	20	3	3	A	4	I		0.4	MECH 112	B-I
						B	6			0.4	VAULT 113	EF-
						C	8			0.4	VAULT 113	EF-
FC UNITS	124C	0.5	20	I	5	A	10			0.4	MECH 112	WH-I
FC UNITS	107,109	1.0			7	B	12			0.5		AC DX PUMPS
FC UNITS	105,102	1.0			9	C	14			0.5		AC DX PUMPS
FC UNITS	118,119	1.0			11	A	16					SPARE
DEHUMIDIFIER	VAULT	1.5	20	2	13	B	18			0.5	PUMP RM B14	DUPLEX SEWAGE PUMP CONTROLLER
						C	20	3		2.7	PUMP RM B14	SEWAGE PUMP#I (2HP)
AC UNIT	EXTERIOR	3.6	20	2	15	A						
						B						
						C	22	3		2.7	PUMP RM B14	SEWAGE PUMP#2 (2HP)
SUMP PUMP	PUMP RM B14	0.5	20	I	17	A						
DUPLEX SUMP PUMP CONTROLS	PUMP RM B14	0.5	20	I	19	B						
AC UNIT	EXTERIOR	5.8	30	3	21	C	24	3	80	20	EXTERIOR	BUILDING AC UNIT
						A						
						B						
SUMP PUMP	PUMP RM B14	0.5	20	I	23	C	26	I	20			SPARE

TOTAL CONNECTED KVA 53

PANEL ME2-1 208/120 VOLTS, 3 PHASES, 4 WIRE, 200 AMPS MAIN CIRCUIT BREAKER
SURFACE MOUNTED; ALL CIRCUIT BREAKERS 22KAIC, 225 AMP FRAME 42 POLES
LOCATION: ELECTRICAL CLOSET SECOND FLOOR

I GROUND BUS

EQUIPMENT SERVED	ROOM NO.	CONN. KVA	TRIP AMPS	P	CKT. NO.	PH	CKT. NO.	P	TRIP AMPS	CONN. KVA	ROOM NO.	EQUIPMENT SERVED
AHU-I (3 HP)	ATTIC	4	20	3	1	A	2	3	20	2.0	ATTIC FOR UPS, ELEC ROOM	EF-
						B						
						C						
EF-	212	2.0	20	3	3	A	4	I		1.0	216,217	FC UNITS
						B	6			1.0	218,219	FC UNITS
						C	8			1.5	220,221,223	FC UNITS
SPARE			20	I	5	A	10			1.0	209,210	FC UNITS
			20		7	B	12			1.0	207,208	FC UNITS
			20		9	C	14					SPARE
			20		11	A	16					
SPARE			20	2	13	B	18					
						C	20	3	20			SPARE
			20	2	15	A						
						B						
SPACE				I	17	C	22	3				SPACE
					19	A						
					21	B						
					23	C	24	I				SPACE
					25	A	26					SPACE
					27	B	28					SPACE
					29	C	30					SPACE

TOTAL CONNECTED KVA 17.7

GENERAL NOTES (PANELBOARD SCHEDULES):

1. ALL PANELS SHALL BE EQUIPPED WITH A GROUND BUS. PROVIDE ISOLATED GROUND BUSES FOR PANELS INDICATED.
2. PANELS WITH 200% RATED NEUTRALS SHALL HAVE PROVISION FOR TERMINATING TWO NEUTRAL CONDUCTORS. ALL OTHER PANELS SHALL HAVE FULLY RATED NEUTRALS AS A MINIMUM.
3. MAXIMUM DEPTH OF ALL RECESSED PANELS SHALL BE 6 INCHES.
4. TVSS CIRCUIT BREAKER SIZED PER MANUFACTURER'S REQUIRMENTS.

LEGEND

G = GROUND FAULT CIRCUIT INTERRUPTER, 5ma.
L = LOCKABLE CIRCUIT BREAKER.

CIRCUIT BREAKER SHALL BE LOCKABLE IN THE "ON" POSITION WITH RED MARKERS.

NOTE: ALL DIMENSIONS SHOWN ARE IN MILLIMETERS.

US Army Corps of Engineers
New York District

Symbol	Description	Date	Appr.
1	REVISE SUMP PUMP SIZE & CIRCUIT DRAFTED 01/20/05	01/24/05	

U.S. ARMY ENGINEER DISTRICT
CORPS OF ENGINEERS
NEW YORK, NEW YORK

Designed by: | Date: | Size: | Rev.:
Dwn by: | Ckd by: | Drawing file no.:
Reviewed by: | Drawing code:
Submitted by: | Plot date: 24-JAN-2005 15:30 | Plot by: e3endfwb | Scale: 0.010146:1.000000
File name: S:\fileroom\military\Fort Hamilton\MPSta\Electrical\MPSta E-504.DGN

PN 52224
MILITARY POLICE STATION
FORT HAMILTON, NY

ELECTRICAL PANEL SCHEDULES

Sheet reference number:
E-504

Submitted by: e3endfwb Plot Date: 24-JAN-2005 15:30
S:øfileroomømilitaryøFort HamiltonøMPStaøElectricaløMPSta E-504.DGN

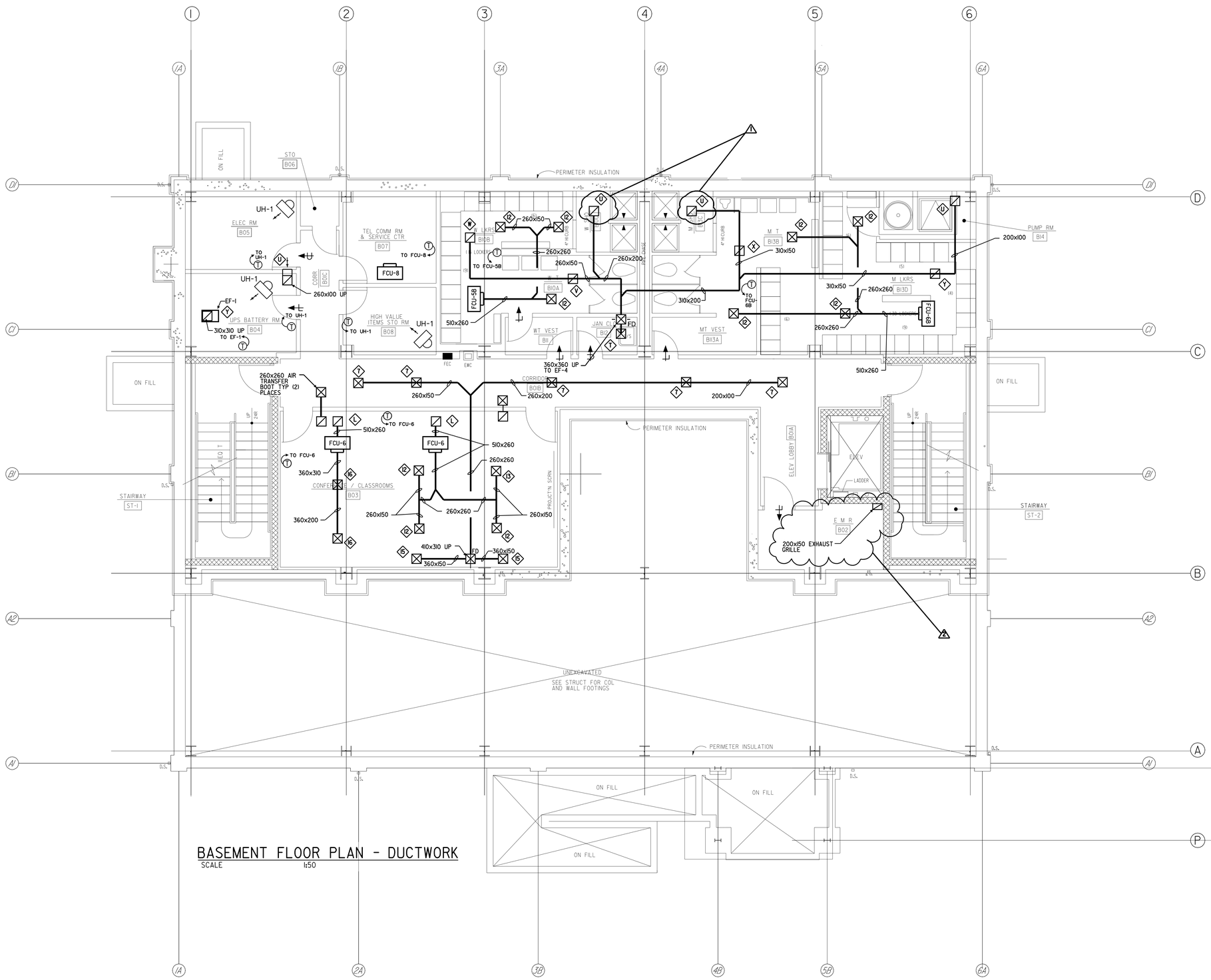

BASEMENT FLOOR PLAN - DUCTWORK

SCALE 1:50

GRAPHIC SCALE

1000mm 0 1M 2M 3M 4M 5M

SCALE 1:50

TRUE NORTH

PROJECT NORTH

NOTE: ALL DIMENSIONS SHOWN ARE IN MILLIMETERS UNLESS OTHERWISE NOTED.

US Army Corps of Engineers
New York District

Symbol	Description	Date	Appr.
4	EXHAUST GRILLE ADDED	1/24/05	
3	GRILLE REVISED	1/24/05	

U.S. ARMY ENGINEER DISTRICT
CORPS OF ENGINEERS
NEW YORK, NEW YORK

Designed by: | Date: | Size: | Rev.:
Dwn by: | Ckd by: | Drawing file no.:
Reviewed by: | Drawing code:
Submitted by: | Plot date: 24-JAN-2005 15:31 | Plot by: e3endfeb | Style: 50000000000
File name: S:\Mission\Military\Fort Hamilton\Utility\Mechanical Amendment #4\UtPlg M-100.dgn

PN. 52224
MILITARY POLICE STATION
FORT HAMILTON, NY

BASEMENT FLOOR PLAN DUCTWORK

Sheet reference number:

M-100

Submitted by: e3endfeb
pw:\\ccd-dcwatt01.ccd.ccb.usace.army.mil:ccd01\projects\Fort Hamilton\UtPlg\Mechanical Amendment #4\UtPlg M-100.dgn
Plot Date: 24-JAN-2005 15:31

NOTE:

1. LOCATION OF EF-3, EF-4 AND RELATED DUCTWORK SHALL BE ABOVE THE ARMS VAULT ROOM 113. DUCTWORK INSIDE THE ARMS ROOM IS PROHIBITED.
2. PROVIDE AN EMERGENCY SHUTOFF SWITCH FOR AHU-1,2.
3. LOCATION OF AHU-2 DUCTWORK SHALL BE ABOVE THE DETENTION CELL ROOMS 122 AND 123. DUCTWORK INSIDE THE DETENTION CELLS IS PROHIBITED.

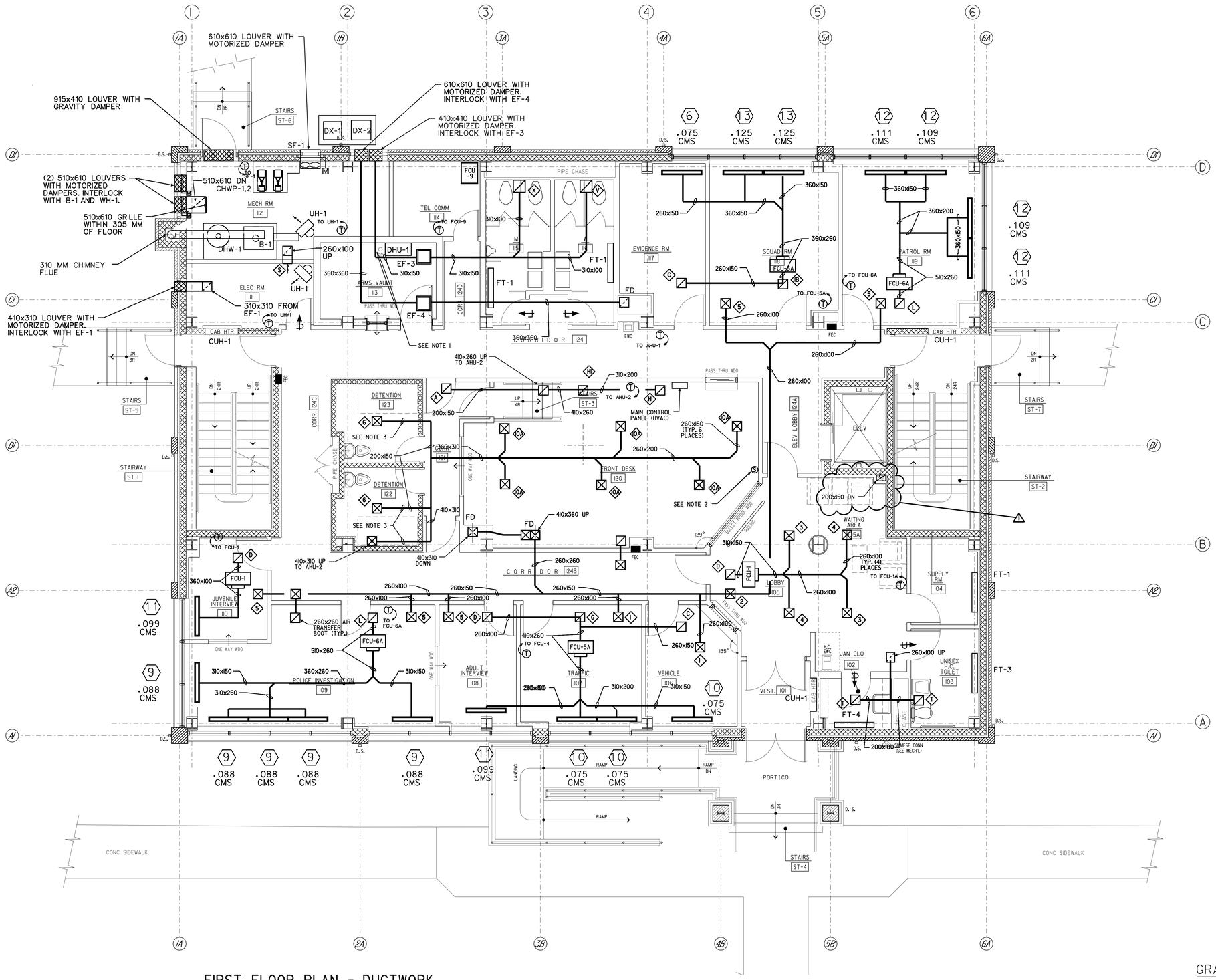

FIRST FLOOR PLAN - DUCTWORK

SCALE 1:50

GRAPHIC SCALE

1000mm 0 1M 2M 3M 4M 5M

SCALE 1:50

TRUE NORTH PROJECT NORTH

NOTE: ALL DIMENSIONS SHOWN ARE IN MILLIMETERS UNLESS OTHERWISE NOTED.

US Army Corps of Engineers New York District

Symbol	Description	Date	App.
1	DUCTWORK ADDED	1/24/05	

U.S. ARMY ENGINEER DISTRICT
CORPS OF ENGINEERS
NEW YORK, NEW YORK

Designed by: | Date: | Size: | Rev.
Dwn by: | Ckd by: | Drawing file no:
Reviewed by: | Drawing code:
Submitted by: | Plot date: 24-JAN-2005 15:31 | Plot by: edenofrio | Scale: 1:50 (ARCH D)
File name: S:\Memorandums\Tech transfer\ARFs\Mechanical\Addendum 4 ARFs\s M-101.dgn

PN 52224
MILITARY POLICE STATION
FORT HAMILTON, NY

FIRST FLOOR PLAN DUCTWORK

Sheet reference number: M-101

Submitted by: eDenofrio
Path/Filename: S:\Memorandums\Tech transfer\ARFs\Mechanical\Addendum 4 ARFs\s M-101.dgn
Plot Date: 24-JAN-2005 15:31

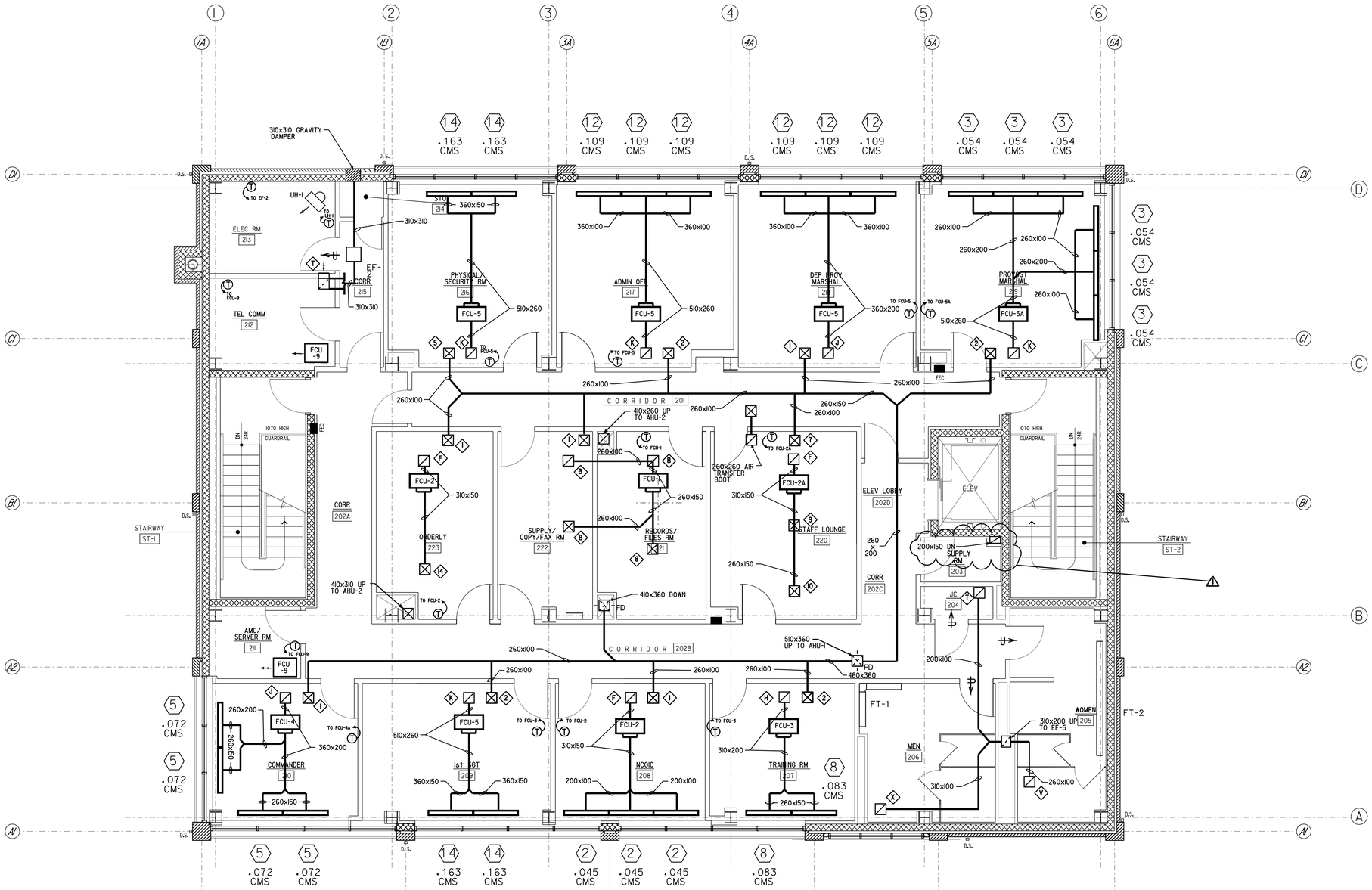

SECOND FLOOR PLAN - DUCTWORK

SCALE 1:50

GRAPHIC SCALE

1000mm 0 1M 2M 3M 4M 5M

SCALE 1:50

TRUE NORTH

PROJECT NORTH

NOTE: ALL DIMENSIONS SHOWN ARE IN MILLIMETERS UNLESS OTHERWISE NOTED.

US Army Corps of Engineers
New York District

Symbol	Description	Date	Appr.
1	DUCTWORK ADDED	1/24/05	

Designed by: | Date: | Size: | Rev.:
Dwn by: | Ckd by: | Drawing file no.:
Reviewed by: | Drawing code:
Submitted by: | Plot date: 24-JAN-2005 15:31 | Plot by: e0dwhwb | Size: 610x1000mm
File name: S:\Mission\military\Fort Hamilton\MPSs\Mechanical\Attachment 1\MPSs M-102.dgn

U.S. ARMY ENGINEER DISTRICT
CORPS OF ENGINEERS
NEW YORK, NEW YORK

PN 62224
MILITARY POLICE STATION
FORT HAMILTON, NY

SECOND FLOOR PLAN
DUCTWORK

Sheet reference number:
M-102

Submitted by: e3endfwb
Plot Date: 24-JAN-2005 15:31
Plot Name: S:\Mission\military\Fort Hamilton\MPSs\Mechanical\Attachment 1\MPSs M-102.dgn

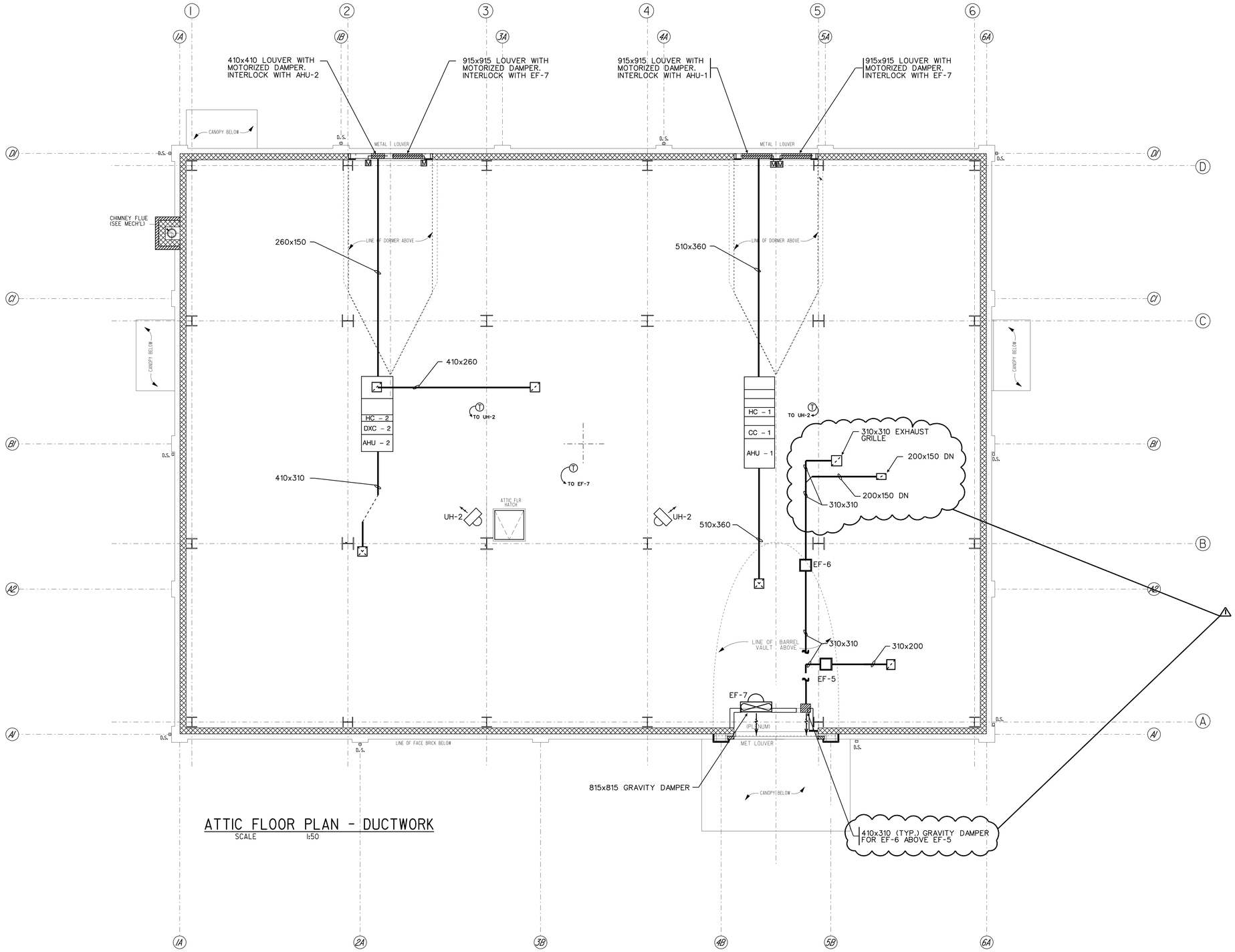

ATTIC FLOOR PLAN - DUCTWORK

SCALE 1:50

GRAPHIC SCALE

1000mm 0 1M 2M 3M 4M 5M

SCALE 1:50

TRUE NORTH PROJECT NORTH

NOTE: ALL DIMENSIONS SHOWN ARE IN MILLIMETERS UNLESS OTHERWISE NOTED.

US Army Corps of Engineers
New York District

Symbol	Description	Date	Appr.
1	DUCTWORK NOTE REVISED.	1/24/05	

Designed by:		Date:	Size: Rev:
Dwn by:	Ckd by:	Drawing file no:	
Reviewed by:		Drawing code:	
Submitted by:		Plot date: 24-JAN-2005 15:31 Plot by: eDonohoe Scale: 1:50/0/0/0/0/0/0/0	

U.S. ARMY ENGINEER DISTRICT
CORPS OF ENGINEERS
NEW YORK, NEW YORK

File name: S:\Services\Military\Fort Hamilton\MPS\Mechanical\Movement 4-MPS\15 M-103.dgn

PN 52224
MILITARY POLICE STATION
FORT HAMILTON, NY

ATTIC FLOOR PLAN DUCTWORK

Sheet reference number:

M-103

Submitted by: eDonohoe
Sattler\donohoe\tbs\pdef: hamilton\MPS\Mechanical\Movement 4-MPS\15 M-103.dgn
Plot Date: 24-JAN-2005 15:31

GRILLE/DIFFUSER/REGISTER SCHEDULE

MARK	CMS	LOCATION (ROOM)	DIFFUSER /GRILLE TYPE	NECK SIZE (MM)	FUNCTION	THROW (MM)	REMARKS
1	.0095	RMS 106,107,208,210, 218,222,223	CEILING DIFFUSER	150x150	SUPPLY	1525	SEE NOTES 1,2,3,4
2	.0189	RMS 105,207,209,217, 219					
3	.0236	RM 105					
4	.0260	RM 105					
5	.0284	RMS 108,109,110,118, 119,216					
6	.0354	RMS 122,123	GRILLE				SEE NOTES 1,2,3,5
7	.0472	RMS B01B,220	CEILING DIFFUSER				SEE NOTES 1,2,3,4
8	.0496	RMS 221,222				2135	
9	.0661	RM 220		230x230		2135	
10	.0685	RM 220				2135	
11	.0803	RM 120				3050	
12	.1086	RMS B03,B10A,B10B,B13B, B13D				3355	
13	.1133	RM B03				3355	
14	.1345	RM 223				3355	
15	.1652	RM B03		310x310		4575	
16	.2195	RM B03		310x310		4575	
A	.0236	RM 121	REGISTER	150x150	RETURN	——	SEE NOTES 1,2,3
B	.0496	RMS 221,222		200x150			
C	.0756	RMS 106,108,117		260x150			
D	.0991	RMS 105,108,110		260x260			
E	.1132	RM 106					
F	.1345	RMS 208,220,223					
G	.1511	RM 107		310x260			
H	.1652	RM 207		310x260			
HI	.2053	RM 120		310x310			
IB	.2502	RM 118		360x360			
J	.2879	RMS 210,218		360x360			
K	.3257	RMS 209,216,217,219		410x410			
L	.4389	RMS B03,109,119		510x510			
S	.0189	RM 111	GRILLE	150x150	EXHAUST		
T	.0236	RMS B12,102,103,204, 213					
U	.0284	RMS B05,B10C,B13C,B14					
V	.0472	RMS B10C,B13C,116, 205		200x150			
W	.0614	RM B10B		200x150			
X	.0708	RMS B13B,115,206		260x150			
Y	.0803	RMS B04,B13D		260x150			

1

NOTES:
1. FOR ALL GRILLES, DIFFUSERS AND REGISTERS, THE MAXIMUM STATIC PRESSURE LOSS IS 49.8 Pa.
2. PROVIDE ADJUSTABLE VOLUME CONTROL FOR ALL UNITS.
3. FOR ALL GRILLES, DIFFUSERS AND REGISTERS, THE MAXIMUM NC SHALL BE 30.
4. CEILING DIFFUSERS SHALL BE IN A 610 MM X 610 MM CEILING GRID.
5. MAXIMUM SECURITY GRILLE SHALL HAVE A 10 GAUGE 304 STAINLESS STEEL FACE WITH 5/16 INCHES DIAMETER HOLES ON 7/16 INCHES STAGGERED CENTERS. THE SLEEVE SHALL BE 10 GAUGE 304 STAINLESS STEEL AND SHALL BE SKIP WELDED TO THE FACE PLATE AND ALONG THE ENTIRE LENGTH OF ALL SLEEVE SEAMS. GRILLE SHALL BE TITUS MODEL SG-PR-SS OR APPROVED EQUAL.

FAN COIL UNIT SCHEDULE

UNIT NO.	UNIT TYPE	AREA SERVED	CMS	EWT °C	LWT °C	COOLING KW TOTAL	COOLING KW SENSIBLE	COOLING L/S	HEATING KW	HEATING L/S	WATTS	ESP Pa	REMARKS
FCU-1	HDSR	RM 105,110 221	.099	7.15	12.65	1.43	1.11	0.06	1.58	0.03	22.37	111	SEE NOTES 1,2,3,5,6,7
FCU-2		RMS 208,223	.134			2.22	1.67	0.10	1.61	0.03	29.82		
FCU-2A		RM 220	.134			2.22	1.67	0.10	2.25	0.04	29.82		
FCU-3		RMS 207	.165			3.25	2.28	0.14	2.10	0.04	37.28		
FCU-4		RMS 210	.287			4.30	3.25	0.19	1.70	0.03	52.19		
FCU-5		RMS 209,216, 217,218	.325			5.86	4.16	0.26	2.93	0.06	89.48		
FCU-5A		RMS 107,118, 219	.325			5.86	4.16	0.26	3.51	0.07	89.48		
FCU-5B	HDSGR	RMS B10A,B10B	.325			——	——	——	3.51	0.07	89.48		
FCU-6	HDSR	RM B03,107	.438			6.38	4.92	0.28	8.06	0.17	52.19		
FCU-6A	HDSR	RMS 109,119	.438			6.38	4.92	0.28	3.51	0.07	52.19		
FCU-6B	HDSGR	RMS B13B,B13D	.438			——	——	——	8.06	0.17	52.19		
FCU-8	HC	RM B07	.283			6.0	4.3	0.25	——	——	44.74	49.72	SEE NOTES 4,5,6,7
FCU-9	V	RMS 114,211, 212	.283			6.0	4.3	0.25	——	——	44.74	49.72	SEE NOTES 4,5,6,7

NOTES:
1. COOLING CAPACITY IS BASED ON 25.3 °C DB & 50% RH. ENTERING WATER TEMPERATURE OF 7.15 °C WITH -12.1 °C WATER TEMPERATURE DROP.
2. FAN COIL UNITS SHALL HAVE SEPARATE HEATING AND COOLING COILS. IN HEATING MODE, COIL CONTROL VALVE SHALL MODULATE TO MAINTAIN SPACE TEMPERATURE AT 19.8 °C.
3. HEATING AND COOLING COILS SHALL BE SIZED WITH 35% PROPYLENE GLYCOL SOLUTION.
4. COOLING COILS SHALL BE DIRECT EXPANSION COILS.
5. UNIT TYPE:
   HC - HORIZONTAL, CABINET SHALL BE CEILING MOUNTED.
   HDSR - HORIZONTAL, DUCTED SUPPLY & RETURN
   HDSGR - HORIZONTAL RECESSED, DUCTED SUPPLY & INTERGAL GRILLE RETURN
   V - VERTICAL, CABINET STYLE HI-RISE OR STACK
6. PROVIDE LOCAL SAFETY DISCONNECT SWITCH.
7. PROVIDE FACTORY BUILT AND INSTALLED PIPING PACKAGE. SEE FAN COIL PIPING DETAIL ON DRAWING M-503.

LINEAR DIFFUSER/REGISTER SCHEDULE

SYMBOL	SLOT NUMBER	SLOT SUPPLY (MM)	NOMINAL INLET DIMENSION (MM)	MAXIMUM RATING CMS	MAXIMUM RATING Pa	LENGTH (MM)	REMARKS
1	2	15	150	.038	18.62 (MAX.)	1220	SEE NOTES 1,2
2		15	150	.045	25.09 (MAX.)		
3		20	200	.054	8.45 (MAX.)		
4				.061	11.37 (MAX.)		
5				.072	15.40 (MAX.)		
6				.075	15.40 (MAX.)		
7				.080	19.63 (MAX.)		
8				.083	19.63 (MAX.)		
9		25	260	.088	13.42 (MAX.)		
10			310	.096	9.94 (MAX.)		
11				.099	12.42 (MAX.)		
12				.111	15.40 (MAX.)		
13				.125	18.63 (MAX.)		
14	3			.163	17.89 (MAX.)		

NOTES
1- ACTUAL CMS SHOWN ON FLOOR PLANS
2- REFERENCE DETAIL ON SHT. M-504 FOR OPENING SIZE DIMENSIONS.

US Army Corps of Engineers
New York District

Symbol	Description	Date	Appr.
1	GRILLE/DIFFUSER/REGISTER SCHEDULE REVISED	12/4/05	

U.S. ARMY ENGINEER DISTRICT
CORPS OF ENGINEERS
NEW YORK, NEW YORK

Designed by: | Date: | Size: | Rev.:
Dwn by: | Ckd by: | Drawing file no.:
Reviewed by: | Drawing code:
Submitted by: | Plot date: 24-JAN-2005 15:31 | Plot by: abaecher | Status: U=Unofficial, F=Final

File name: S:\Memorial\Military\Fort Hamilton\Office\Mechanical\Amendment #1\MP9a 1a 600.dgn

PN 52224
MILITARY POLICE STATION
FORT HAMILTON, NY

MECHANICAL SCHEDULES - 1

Sheet reference number:
M-600

Plot Date: 24-JAN-2005 15:31
Submitted by: eSenatWeb
perfilerdocumentilloyd@f1.hamilton.army.mil

AIR HANDLING UNIT SCHEDULE

UNIT NO.	AREA SERVED	SUPPLY FAN: CMS MIN. O.A.	CMS TOTAL	TOTAL PA	MOTOR W	MOTOR RPS	COOLING COIL: UNIT NO.	ENT AIR (° C) DB	ENT AIR WB	LVG AIR (° C) DB	LVG AIR WB	FACE VEL (MAX) M/S	APD MAX (MM)	TOTAL CAPACITY KW	SENSIBLE CAPACITY KW	LATENT CAPACITY KW	CHILLED WATER/DIRECT EXPANSION L/S	EWT (° C)	LWT (° C)	PD (MM)	NUMBER OF ROWS	HEATING COIL: UNIT NO.	HTG. CAP. (KW)	AIR EAT (° C)	AIR LAT (° C)	AIR PD(MM)	HOT WATER ENT (° C)	HOT WATER LVG (° C)	HOT WATER L/S	HOT WATER PD(MM)	HOT WATER NUMBER OF ROWS	REMARKS
AHU-1	MP STATION	.944	.944	848	2238	35.64	CC-1	30.6	22.2	12.3	12.2	3.05	42.93	34.46	21.35	13.11	1.63	7.2	12.8	1768	10	HC-1	33.70	-9.4	20.0	5.34	93	82	.764	153	2	SEE NOTE 1, 2, 3
AHU-2	FRONT DESK, DETENTION CELLS	.118	.552	393	745.7	23.77	DXC-2	26.7	19.3	12.4	12.2	2.54	9.91	13.46	9.69	3.77	.58	7.2	12.8	27.94	6	HC-2	14.34	13.7	35.2	2.04	93	82	.33	3.56	2	SEE NOTE 1, 2, 4

NOTE:

1- AHU - I SHALL HAVE DOUBLE WALL CASING FOR NOISE REDUCTION,
2- PROVIDE UNIT DISCONNECT SWITCH.
3- PERFORMANCE DATA IS BASED ON 35% PROPYLENE GLYCOL.
4- COOLING COIL SHALL BE A DIRECT EXPANSION COIL.

AIR COOLED LIQUID CHILLER SCHEDULE

UNIT NO.	CHILLER: KW (NOM.) @ 34.65°C AMBIENT AIR	L/S	TEMP (°C) IN	TEMP (°C) OUT	PRESS DROP (MAX) (MM)	EER	INPUT KW/TON	COMPRESSOR: NOM SIZE (KW)	VOLT/ PHASE	STEPS OF UNLOADING	NO. OF COMP.	CONDENSER: NOM. SIZE (KW)	NO. OF COILS	CONDENSER FANS: NO. OF FANS	W	VOLT/ PHASE	REMARKS
CH-1	123.4	5.31	12.6	7.1	2255	9.8	42.9/35.1	35.17	208/3	100-75-50-25	4	140.6	2	4	745.7	208/3	SEE NOTES 1, 2, 3

NOTE:
1-PROVIDE REDUCED VOLTAGE STARTERS FOR EACH COMPRESSOR.
2-UNIT SHALL BE COMPATIBLE WITH AHU-1.
3-A FUNNEL AND VALVE SHALL BE PROVIDED AT THE SYSTEM HIGH POINT TO ADD 35% PROPLENE GLYCOL MIXTURE TO THE SYSTEM AS REQUIRED.

BOILER SCHEDULE

UNIT NO.	LOCATION	HOT WATER KG/MM2	KW: IBR GROSS OUTPUT	KW: IBR NET RATING	TEMP °C: EWT	TEMP °C: LWT	FIRING RATE OIL: TYPE	OIL: L/M	GAS: TYPE	GAS: KW	FORCED DRAFT FAN W	REMARKS
B-1	MECH RM 111	.03	150.9	131.2	82	93	—	—	NATURAL	187.2	—	SEE NOTES 1

NOTE:
1-A FUNNEL AND VALVE SHALL BE PROVIDED AT THE SYSTEM HIGH POINT TO ADD 35% PROPYLENE GLYCOL MIXTURE TO THE SYSTEM AS REQUIRED.

UNIT HEATER SCHEDULE

UNIT NO.	LOCATION	KW	AIR DATA CMS	AIR DATA EAT °C	HOT WATER DATA EWT°C	HOT WATER DATA LWT°C	HOT WATER DATA L/S	TYPE	W	REMARKS
UH-1	RMS B04,B05,B10A, B13B,B13D,111,112,213	2.35/1.99	.116/.099	15	93	82	.051	HORIZONTAL PROPELLER	9	SEE NOTES 1,2,3
UH-2	ATTIC	7.26	.274	15	93	82	.158	HORIZONTAL PROPELLER	15.81	SEE NOTES 1,2

NOTES:
1- UNIT SHALL BE THERMOSTATICALLY CONTROLLED.
2- PROVIDE LOCAL SAFETY DISCONNECT SWITCH.
3- PROVIDE VARIABLE SPEED CONTROLLER.

DOMESTIC HOT WATER HEATER SCHEDULE

UNIT NO.	STORAGE (L)	RECOVERY (LPH)	(KW) INPUT	TEMP RISE °C	FIRING RATE OIL: TYPE	OIL: LPM	GAS: TYPE	GAS: KW	FORCED DRAFT FAN (W)	REMARKS
DHW-1	284	572	47	56	—	—	NATURAL	—	—	—

EXHAUST/RELIEF FAN SCHEDULE

UNIT NO.	LOCATION	AREA SERVED	CMS	Pa	ROOF/ WALL OPENING	RPS	DRIVE	WATTS	TYPE	REMARKS
EF-1	UPS BATT. RM B04	UPS BATT. RM B04	.080	62.30	—	25.84	DIRECT	24.61	CENTRIFUGAL IN-LINE	SEE NOTES 1,2,4,5,6
EF-2	CORRIDOR RM 215	RM B05,111,213	.071	93.24	—	21.67		37.29		SEE NOTES 1,4,5,6
EF-3	ABOVE ARMS VAULT (1ST FL)	RM 115,116	.118	124.32	—	25.84		61.90		SEE NOTES 1,2,5,6,7
EF-4	ABOVE ARMS VAULT (1ST FL)	RMS B10A,B10B,B10C,B12, B13B,B13C,B13D,B14	.368	155.40	—	28.76	BELT	559.28		SEE NOTES 1,2,3,5,6
EF-5	ATTIC	RM 102,103,204,205,206	.189	124.32	—	28.76		186.43		SEE NOTES 1,3,5,6
EF-6	ATTIC	EMR RM B02 VIA ELEVATOR SHAFT	.163	93.24	—	28.76		186.43		SEE NOTES 1,3,5,6
EF-7	ATTIC	ATTIC	3.77	93.24	965	28.76		745.7	PROPELLER	SEE NOTES 1,4,5,6
SF-1	MECH RM 112	MECH RM 112	.425	93.24	815	28.76		186.43	PROPELLER	SEE NOTES 1,2,4,5,6

NOTES:
1- PROVIDE SAFETY DISCONNECT SWITCH.
2- INTERLOCK WITH EXHAUST MOTORIZED DAMPER.
3- EF-4,5,6 SHALL BE INTERLOCKED WITH AHU-1.
4- HOA THERMOSTATICALLY CONTROLLED.
5- FOR ELECTRICAL CHARACTERISTICS, SEE ELECTRICAL DRAWINGS.
6- PROVIDE STARTERS INTEGRAL WITH UNIT.
7- EF-3 SHALL BE INTERLOCKED WITH AHU-2.

PUMP SCHEDULE

UNIT NO.	LOCATION	SYSTEM SERVED	L/S	TDH MM	DESIGN PRESSURE KG/MM2	TEMP °C MIN	TEMP °C MAX	W	TYPE	REMARKS
HWP-1	MECH RM 111	HEATING	5.7	12192	.12	4.4	104.4	2237	CENTRIFUGAL	NOTES 1, 4
HWP-2	MECH RM 111	HEATING	5.7	12192	.12	4.4	104.4	2237	CENTRIFUGAL	NOTES 1, 4
CHWP-1	MECH RM 111	COOLING	5.99	15240	.12	4.4	104.4	2238	CENTRIFUGAL	NOTES 2, 3, 4
CHWP-2	MECH RM 111	COOLING	5.99	15240	.12	4.4	104.4	2238	CENTRIFUGAL	NOTES 2, 3, 4
DHWCP-1	MECH RM 111	DOMESTIC HOT WATER	.32	5180	.12	4.4	104.4	124	CENTRIFUGAL	NOTES 1,4
SEP-1	PUMP RM B14	SANITARY SEWER	2.90	9145	—	—	—	1492	GRINDER PUMP	

NOTE:
1. IN-LINE CENTRIFUGAL
2. CENTRIFUGAL, END SUCTION, BASE MOUNTED
3. PUMPS PIPED IN PARALLEL.
4. PROVIDE A LOCAL DISCONNECT SAFETY SWITCH AND A SET OF ISOLATION VALVES FOR EACH PUMP FOR MAINTENANCE.

US Army Corps of Engineers
New York District

Symbol	Description	Date	Appr.
1	EXHAUST FAN SCHEDULE REVISED	12/4/05	

U.S. ARMY ENGINEER DISTRICT
CORPS OF ENGINEERS
NEW YORK, NEW YORK

Designed by: | Date: | Size: | Rev:
Dwn by: | Ckd by: | Drawing file no.:
Reviewed by: | Drawing code:
Submitted by: | Plot date: 24-JAN-2006 15:31 | Plot by: admin0ab | Scale: 0.00000000000
File name: S:\Wilson\military\Fort Hamilton\MPS\Mechanical\Attachment 1\M-601.dgn

PN 52224
MILITARY POLICE STATION
FORT HAMILTON, NY

MECHANICAL SCHEDULES – 2

Sheet reference number:
M–601

Submitted by: admin0ab
Office:Guadalupe/Pecos
Plot Date: 24-JAN-2006 15:31
S:\Wilson\military\Fort Hamilton\MPS\Mechanical\Attachment 1\M-601.dgn

NOTES:

1) WATER FLOW ENTERING THE BUILDING IS 112 LITERS PER SECOND AT A PRESSURE OF 393 kPa.

2) LOCATE SUMP PUMP IN 760x760x760 SUMP PIT. COORDINATE WITH ELECTRICAL. SUMP PUMP SHALL BE 1.27 L\S, 15240 MM HEAD, 373 W, 208 V, 3 PH, 60 Hz, 57.51 RPS WITH INTERGRAL FULLY SUBMERSIBLE FLOAT SWITCH FOR AUTOMATIC CONTROL OF PUMP. PROVIDE DISCHARGE CONNECTION. PROVIDE TYPE PF-1 HEAVY STEEL COVER WITH CORROSION RESISTANCE COATING, WITH CONNECTION FOR VENT AND CABLE. PROVIDE HIGH WATER ALARM, 6096 MM CORD.

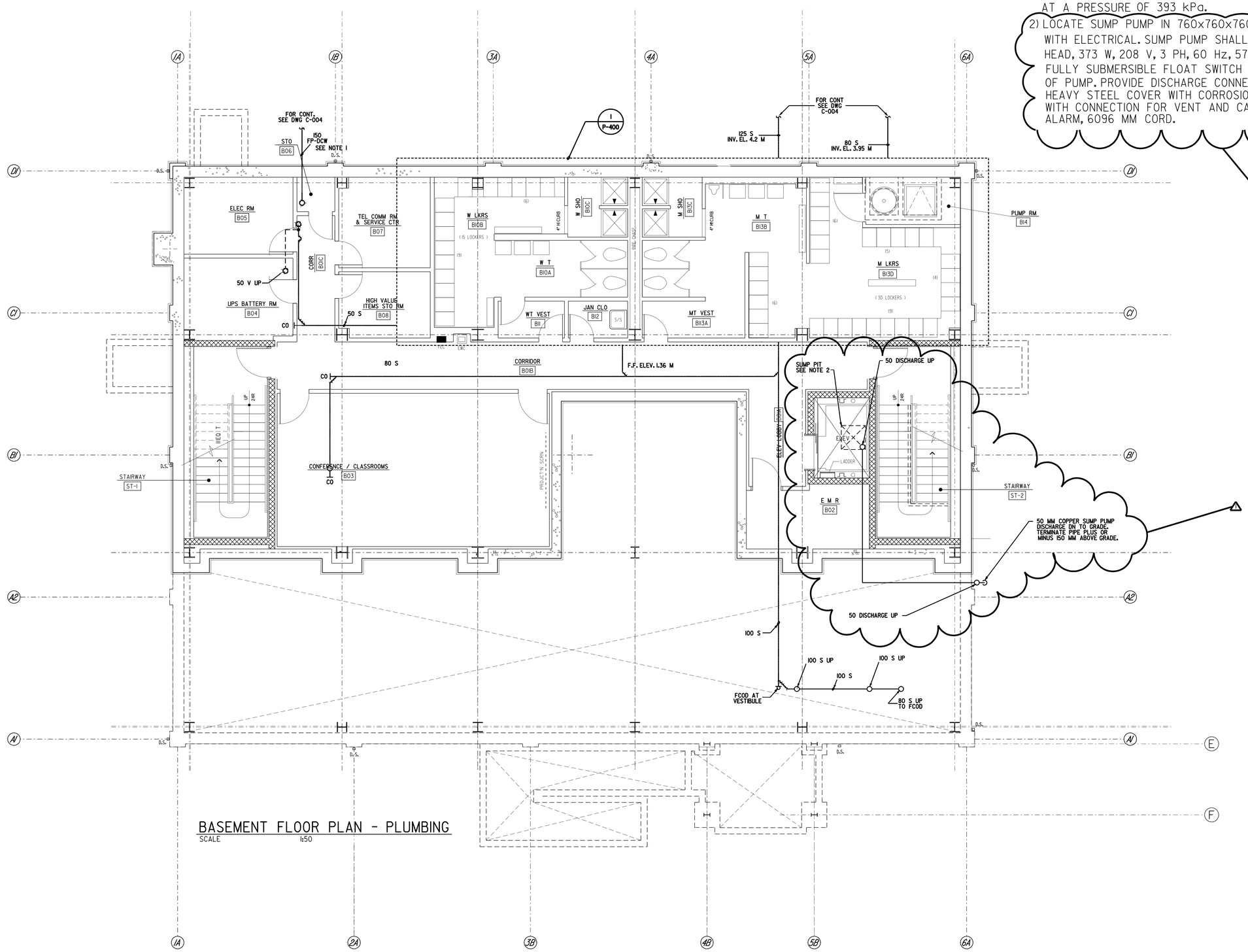

BASEMENT FLOOR PLAN - PLUMBING
SCALE 1:50

GRAPHIC SCALE
1000mm 0 1M 2M 3M 4M 5M
SCALE 1:50

TRUE NORTH PROJECT NORTH

NOTE: ALL DIMENSIONS SHOWN ARE IN MILLIMETERS UNLESS OTHERWISE NOTED.

US Army Corps of Engineers
New York District

Symbol	Description	Date	Appr.
1	SUMP PIT, PUMP AND NOTE #2 ADDED.	1/21/05	

U.S. ARMY ENGINEER DISTRICT
CORPS OF ENGINEERS
NEW YORK, NEW YORK

Designed by: | Date: | Size: | Rev:
Dwn by: | Ckd by: | Drawing file no.:
Reviewed by: | Drawing code:
Submitted by: | Plot date: 24-JAN-2005 15:31 | Plot by: ebenchek | Scale: N/A

File name: S:\Benson\military\fort hamilton\office\Mechanical\Amendment 4\MP9-Sta P-100.dgn

PN 52224
MILITARY POLICE STATION
FORT HAMILTON, NY

BASEMENT FLOOR PLAN
PLUMBING

Sheet reference number:
P-100

Submitted by: e3mailweb
partitionadmin\bsp\for1 hamilton\MP9\Mechanical\Amendment 4\MP9-Sta P-100.dgn
Plot Date: 24-JAN-2005 15:31

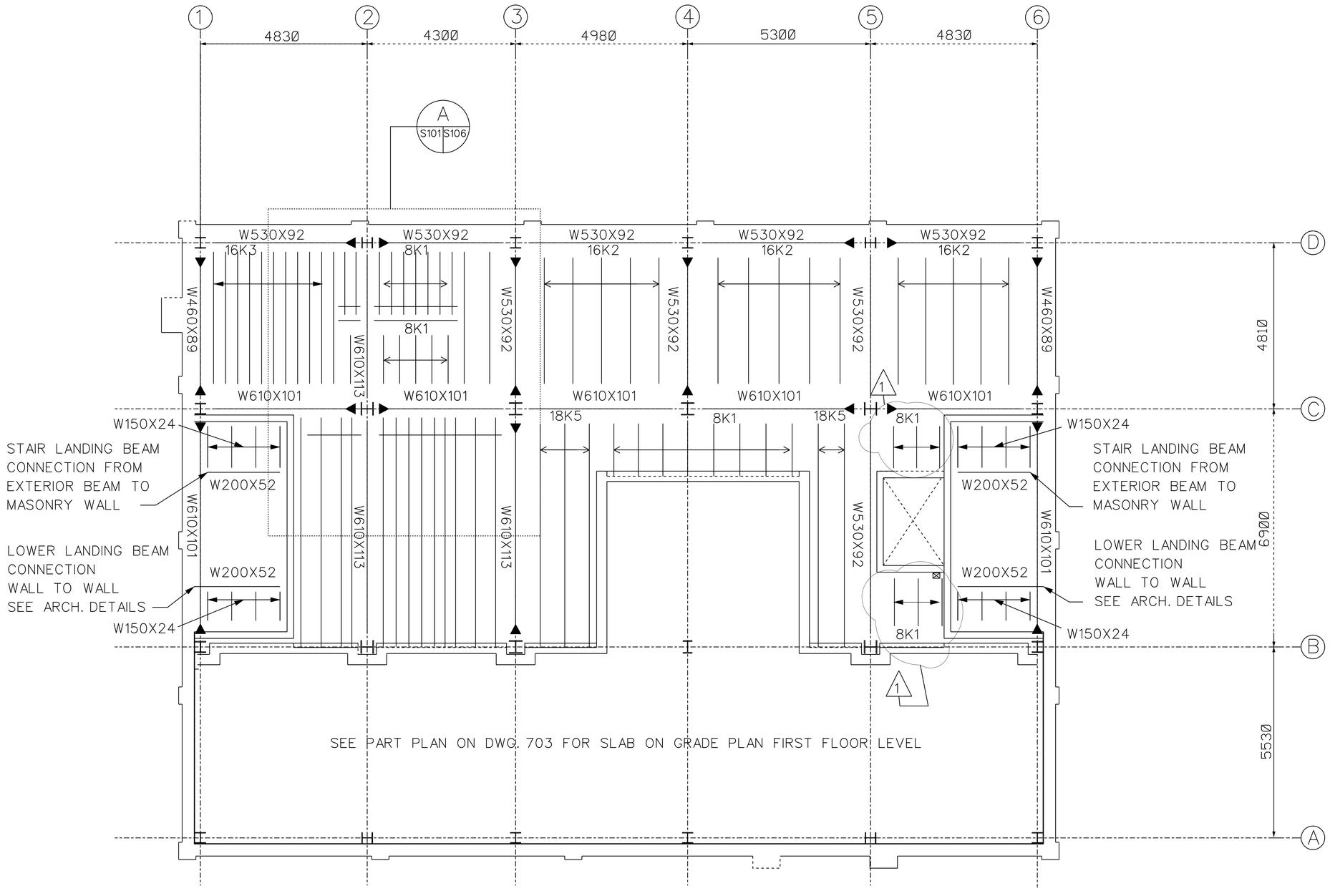

SEE MECHANICAL & ARCHITECTURAL DRAWINGS FOR FLOOR PENETRATIONS.

NOTE: ALL DIMENSIONS SHOWN ARE IN MILLIMETERS.

US Army Corps of Engineers
New York District

Symbol	Description	Date	Appr.
1	REVISION #1: INCORPORATED ADDITIONAL BEAM SIZES	12/4/05	

U.S. ARMY ENGINEER DISTRICT
CORPS OF ENGINEERS
NEW YORK, NEW YORK

Designed by: JLW
Dwn by: JLW
Ckd by:
Reviewed by:
Submitted by:
Date:
Size:
Rev.
Drawing file no.:
Drawing code:
Plot date: 24-JAN-2006 16:21
Plot by: eJenofer
Scale: 0.0000001/0000000
File name: S:\Transport\Military\Fort Hamilton\Office\Structural\Office_S-101.dgn

PN: 62224
MILITARY HOUSE
FORT HAMILTON, NY

FIRST FLOOR FRAMING PLAN

Sheet reference number:
S-101

Submitted by: eJenofer
pathfinder=military\fort hamilton\office\structural\office_s-101.dgn
Plot Date: 24-JAN-2006 15:31

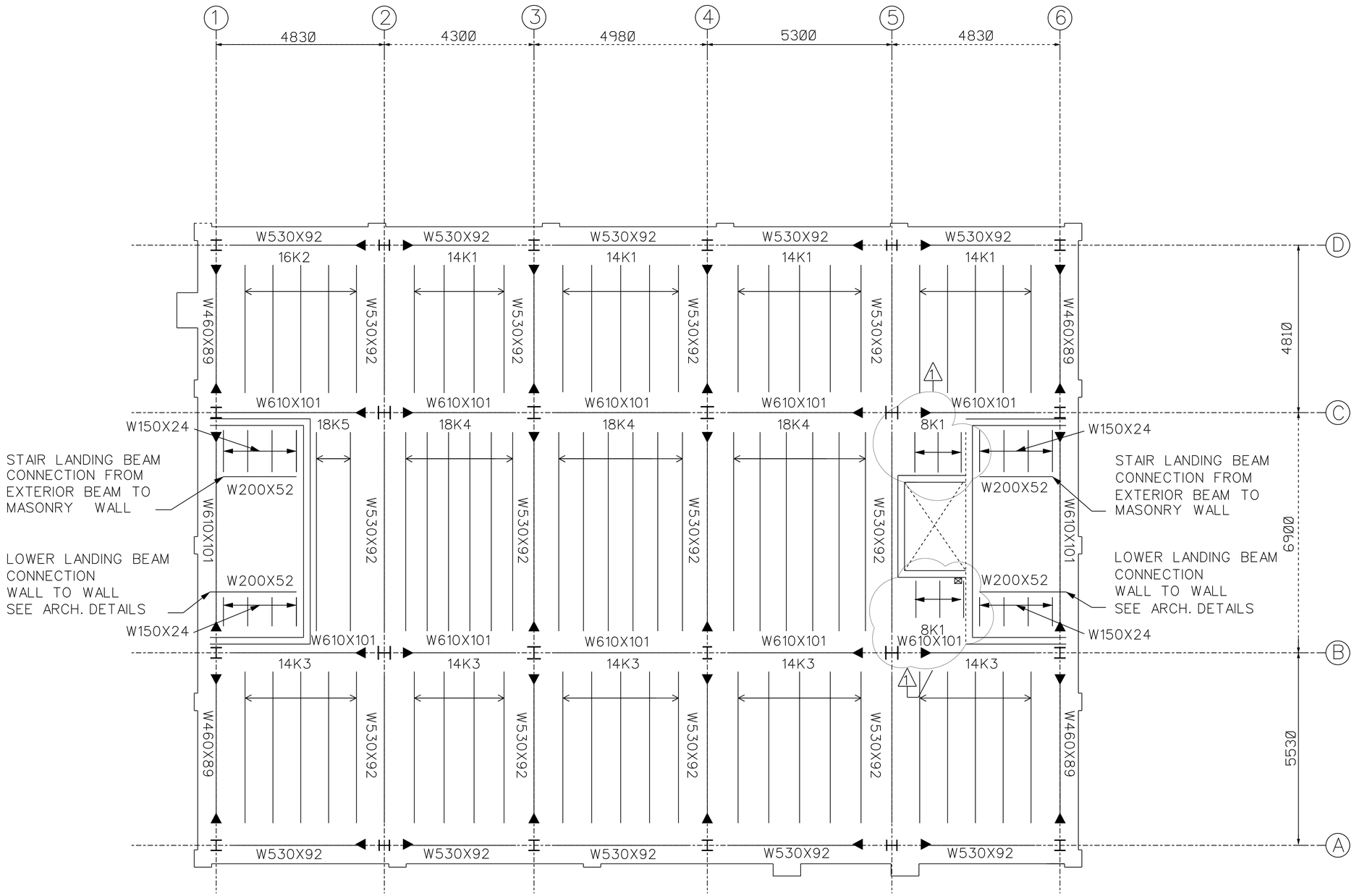

NOTE: ALL DIMENSIONS SHOWN ARE IN MILLIMETERS.

US Army Corps of Engineers
New York District

Symbol	Description	Date	Appr.
1	REVISION #1: INCORPORATED ADDITIONAL BEAM SIZES.	12/4/05	

U.S. ARMY ENGINEER DISTRICT
CORPS OF ENGINEERS
NEW YORK, NEW YORK

Designed by: JLW | Date: | Size: | Rev.:
Dwn by: JLW | Ckd by:
Reviewed by:
Submitted by:
Drawing file no.:
Drawing code:
Plot date: 24-JAN-2006 15:31
Plot by: e3endfwb
Size: 22.00H x 34.00W
File name: S:\Basos\military\Fort Hamilton\MPS\Structural\MPSs S-102.dgn

PN 52224
MILITARY POLICE STATION
FORT HAMILTON, NY

SECOND FLOOR FRAMING PLAN

Sheet reference number:
S-102

Submitted by: e3endfwb
S:\Basos\military\Fort Hamilton\MPS\Structural\MPSs S-102.dgn
Plot Date: 24-JAN-2006 15:31

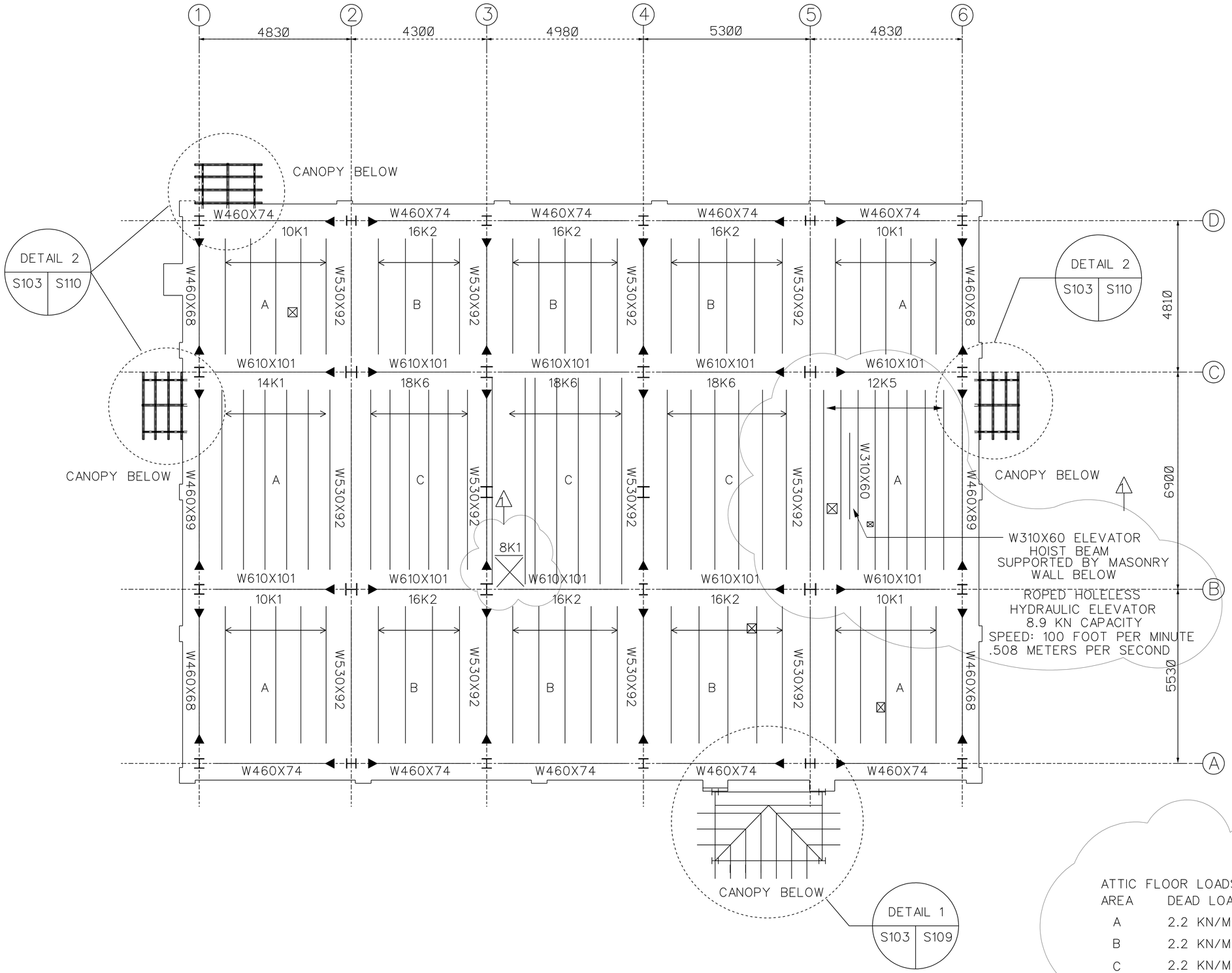

ATTIC FLOOR LOADS:

AREA	DEAD LOAD	LIVE LOAD
A	2.2 KN/M^2	1.2 KN/M^2
B	2.2 KN/M^2	4.8 KN/M^2
C	2.2 KN/M^2	7.2 KN/M^2

NOTE: ALL DIMENSIONS SHOWN ARE IN MILLIMETERS.

US Army Corps of Engineers
New York District

Symbol	Description	Date	Appr.
A	REVISION #1: INCLUDED ELEVATOR BEAM INFORMATION AND ATTIC FLOOR LOADINGS.	12/4/05	

U.S. ARMY ENGINEER DISTRICT
CORPS OF ENGINEERS
NEW YORK, NEW YORK

Designed by: JLW
Dwn by: JLW
Ckd by:
Reviewed by:
Submitted by:
Date:
Size:
Rev.
Drawing code:
Drawing file no.:
Plot date: 24-JAN-2005 15:31
Plot by: eDenHeb
Scale: as indicated
File name: S:\Mission\Military\Fort Hamilton\MPSta\Structural\MPSta S-103.dgn

PN 52224
MILITARY POLICE STATION
FORT HAMILTON, NY

ATTIC FLOOR FRAMING PLAN

Sheet reference number:
S-103

Submitted by: eDenHeb Plot Date: 24-JAN-2005 15:31
S:\Mission\Military\Fort Hamilton\MPSta\Structural\MPSta S-103.dgn

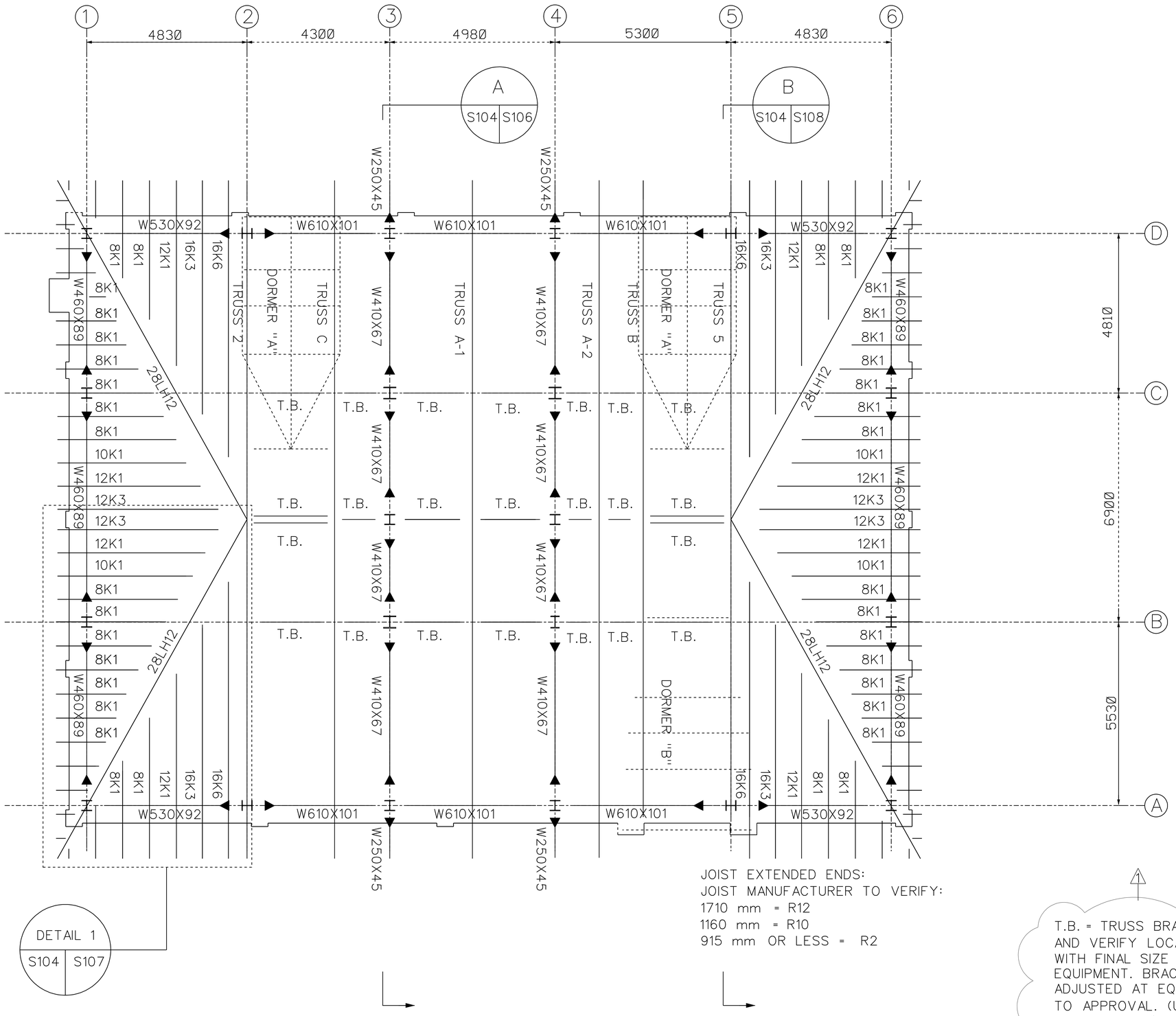

JOIST EXTENDED ENDS:
JOIST MANUFACTURER TO VERIFY:
1710 mm = R12
1160 mm = R10
915 mm OR LESS = R2

T.B. = TRUSS BRACES WT125X14. COORDINATE AND VERIFY LOCATION OF TRUSS BRACES WITH FINAL SIZE AND PLACEMENT OF EQUIPMENT. BRACE LOCATION MAY BE ADJUSTED AT EQUIPMENT LOCATIONS SUBJECT TO APPROVAL. (UPPER & LOWER BRACES)

SEE DWG. S107 FOR DORMER DETAILS.

NOTE: ALL DIMENSIONS SHOWN ARE IN MILLIMETERS.

US Army Corps of Engineers
New York District

Symbol	Description	Date	Rev
1	REVISION #1: INCLUDED TRUSS BRACES NOTES.	12/4/05	

U.S. ARMY ENGINEER DISTRICT
CORPS OF ENGINEERS
NEW YORK, NEW YORK

Designed by: JLW
Dwn by: JLW
Ckd by:
Reviewed by:
Submitted by:
Date:
Size:
Rev:
Drawing file no.:
Drawing code:
Plot date: 24-JAN-2005 15:32
Plot by: eJenofwo
Scale: as shown / 1:300/00
File name: S:\Stevens\military\Fort Hamilton\MPdg\Structural\MPdg S-104.dgn

PN. 52224
MILITARY POLICE STATION
FORT HAMILTON, NY

ROOF FRAMING PLAN

Sheet reference number:
S-104

Submitted by: eJenofwo
Plot Date: 24-JAN-2005 15:32
S:\Stevens\military\Fort Hamilton\MPdg\Structural\MPdg S-104.dgn

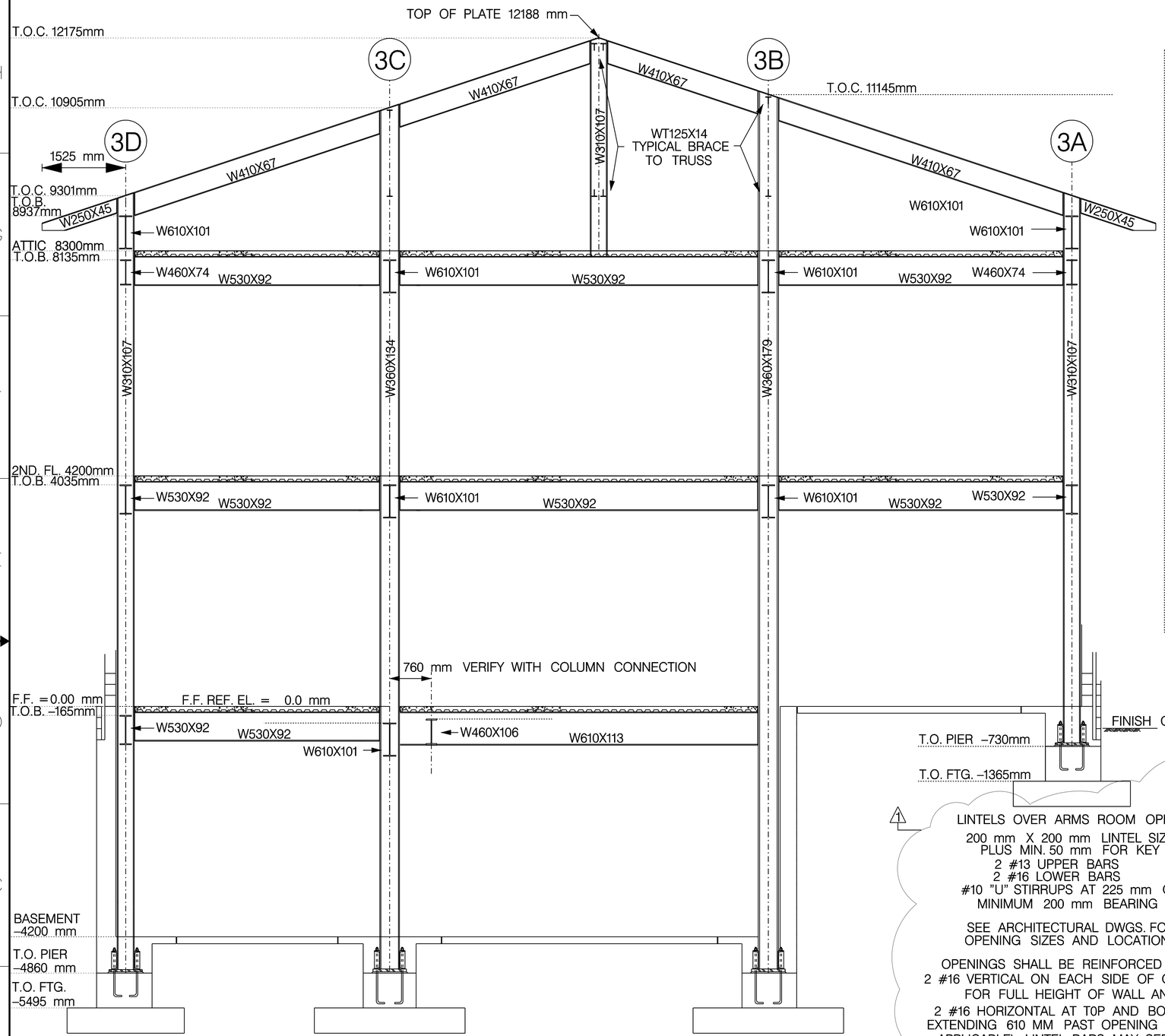

A
S104 S106
SECTION AT MOMENT FRAME

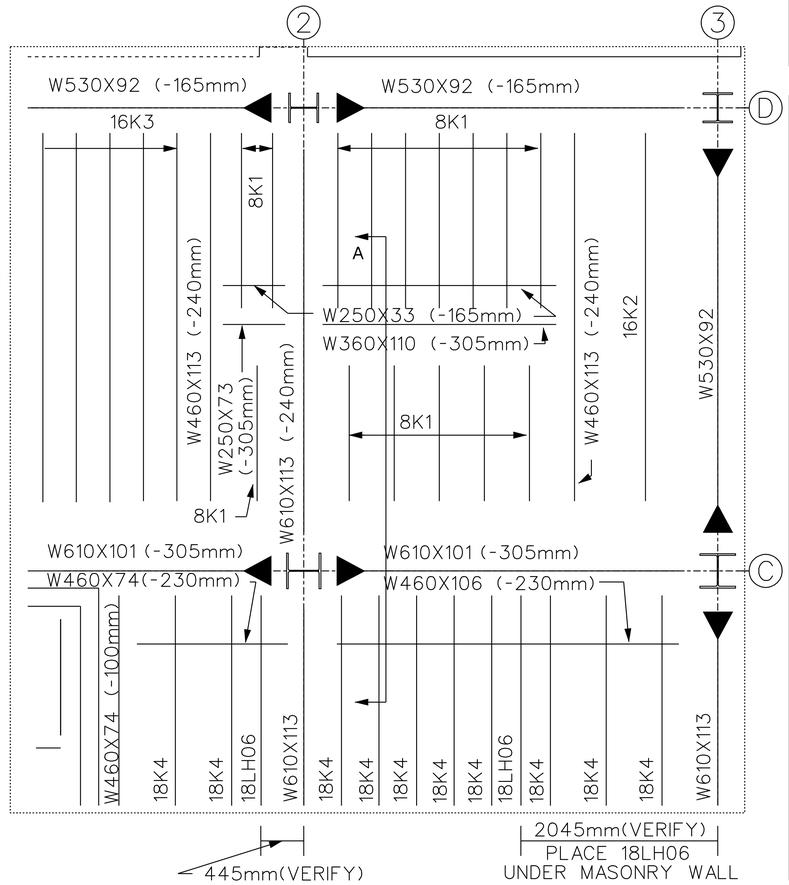

A
S101 S106
DETAIL AT ARMS ROOM

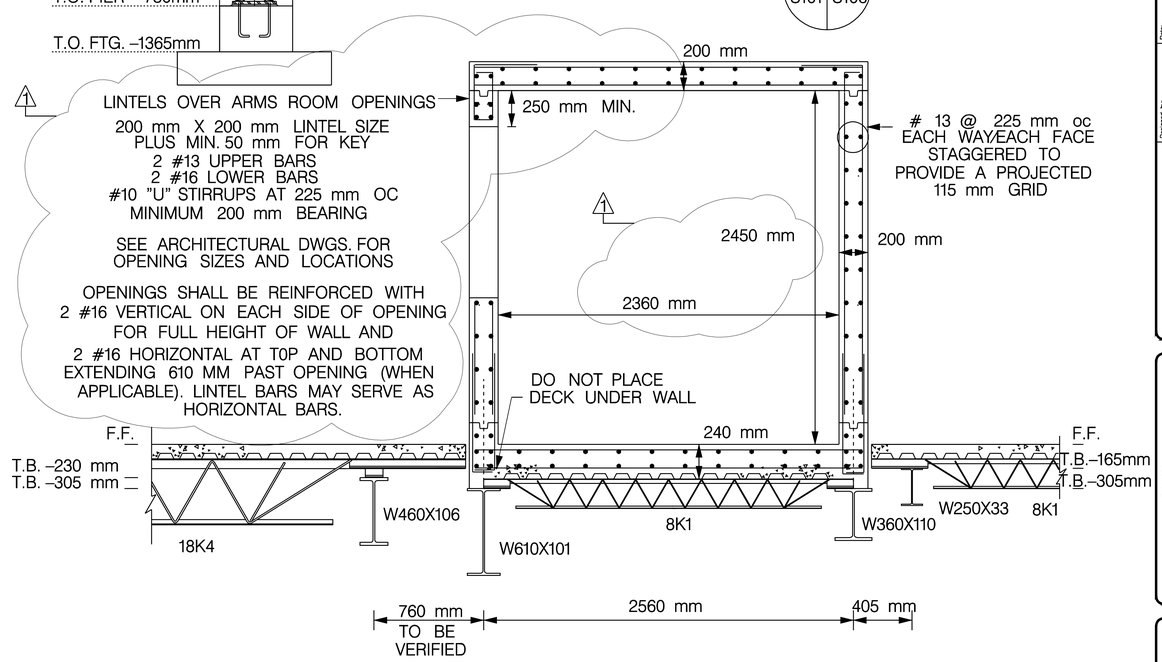

SECTION "A" THROUGH ARMS ROOM

NOTE: ALL DIMENSIONS SHOWN ARE IN MILLIMETERS.

US Army Corps of Engineers
New York District

Rev.	Date	Description
A	12/4/05	REVISION #1- DIMENSIONS AND LINTEL DESIGNATIONS FOR ARMS ROOM.

U.S. ARMY ENGINEER DISTRICT
CORPS OF ENGINEERS
NEW YORK, NEW YORK

Designed by: JLW
Dwn by: JLW
Ckd by:
Reviewed by:
Submitted by:
Date:
Size:
Rev:
Drawing file no.:
Drawing code:
Plot date: 24-JAN-2005 15:32
Plot by: e2kwrfwb
Saved: S:\ft hamilton\military\fortsq 5-106.dgn
File name: S:\fforcon\military\ft hamilton\MPSq\Structural\MPSq 5-106.dgn

PN 52224
MILITARY POLICE STATION
FORT HAMILTON, NY

MISC. STEEL
SECTION DETAILS

Sheet reference number:
S–106

Submitted by: e2kwrfwb
S:\fforcon\military\FtFt Hamilton\MPS\Struct\Grp\MPS\fg 5-106a.dgn
Plot Date: 24-JAN-2005 15:32

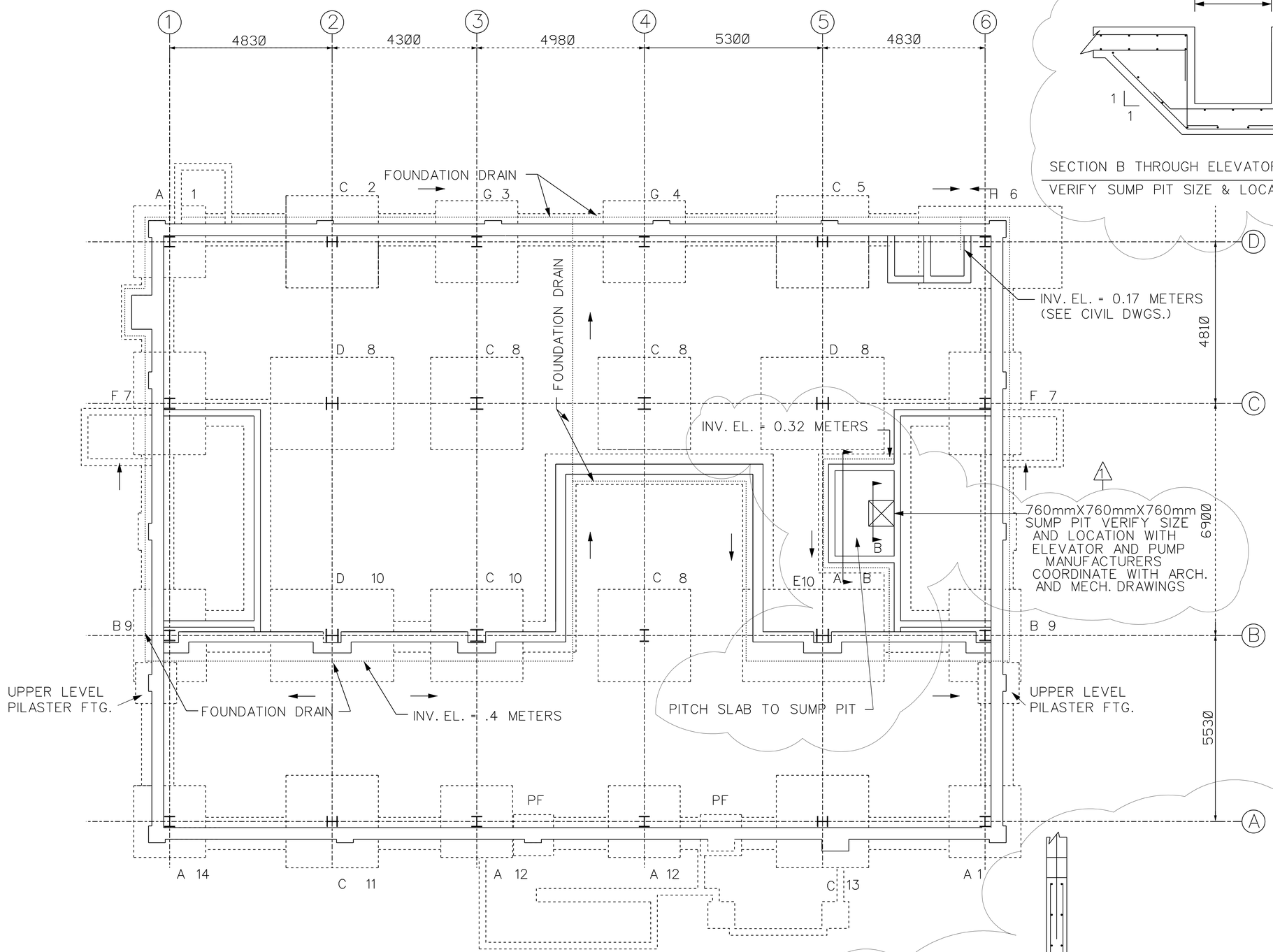

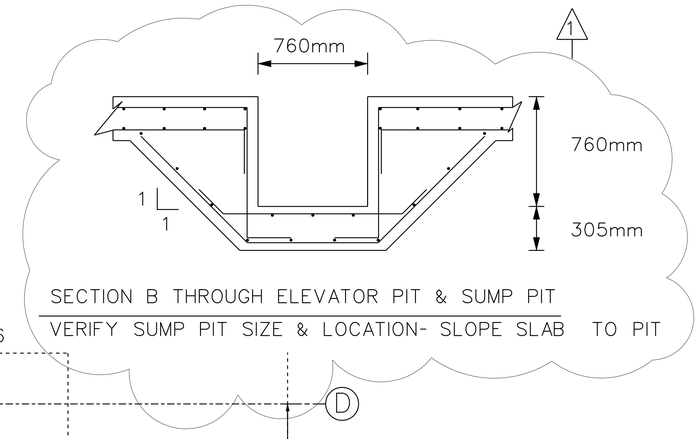

SECTION B THROUGH ELEVATOR PIT & SUMP PIT

VERIFY SUMP PIT SIZE & LOCATION- SLOPE SLAB TO PIT

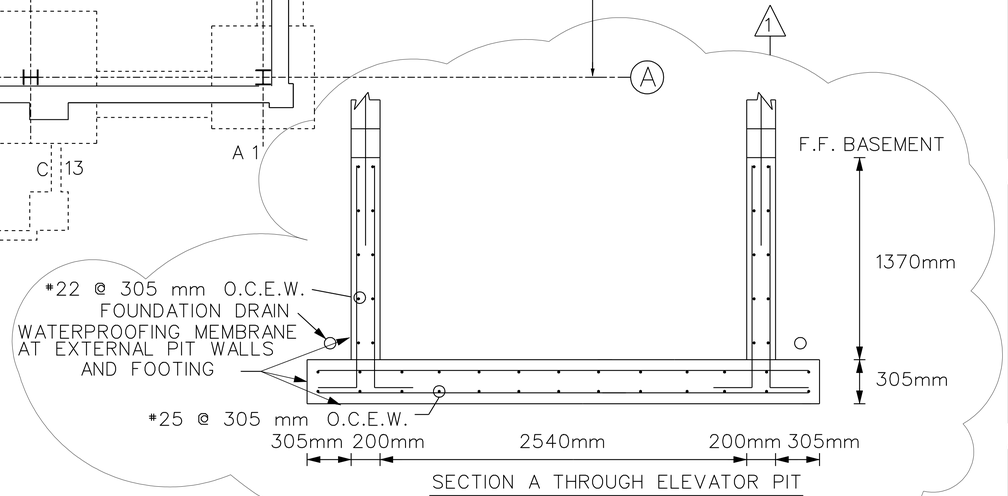

SECTION A THROUGH ELEVATOR PIT

LETTER DENOTES FOOTING TYPE. NUMBER DENOTES PIER TYPE. SEE COLUMN SCHEDULE DWG. S105 FOR FOOTING TABLE WITH REINFORCEMENT. SEE DWG. 704 FOR PIER TYPES.
SEE DWG. S705 FOR EXTERIOR STAIR AND RAMP DETAILS.

NOTE: ALL DIMENSIONS SHOWN ARE IN MILLIMETERS.

US Army Corps of Engineers
New York District

Symbol	Description	Date	Appr.
A	REVISION #1 – INCORPORATED SUMP PIT, SUMP PIT NOTES AND FOUNDATION DRAIN AT ELEVATOR PIT.	12/4/05	

Designed by: GJC/SOD
Date:
Size:
Rev.
Dwn by: JLW
Ckd by:
Drawing file no:
Drawing code:
Reviewed by:
Submitted by:
Plot date: 24-JAN-2005 15:32
Plot by: eberdeb
Scale: so:100000000
File name: S:\Resources\Military\Fort Hamilton\MPS\Structural\MPS\s_S-701.dgn

U.S. ARMY ENGINEER DISTRICT
CORPS OF ENGINEERS
NEW YORK, NEW YORK

PN 82224
MILITARY POLICE STATION
FORT HAMILTON, NY

FOUNDATION PLAN

Sheet reference number:
S-701

Submitted by: eberdeb
Plot Date: 24-JAN-2005 15:32
S:\Resources\Military\Fort Hamilton\MPS\Structural\MPS\s_S-701.dgn

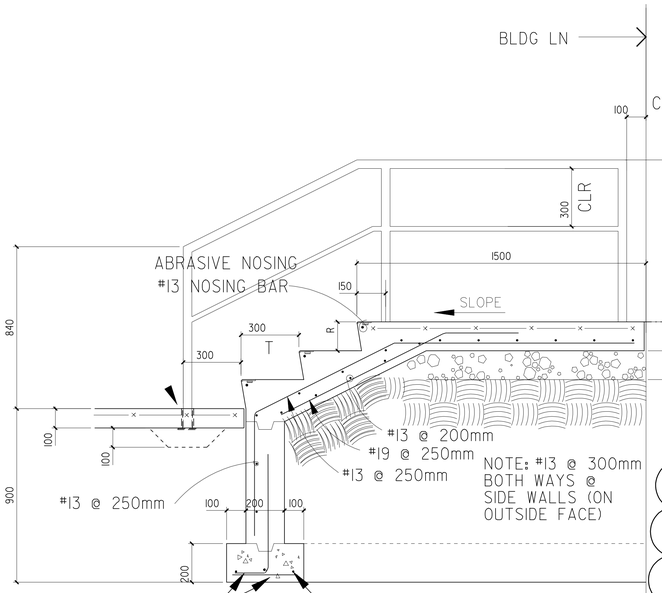

EXTERIOR STAIR SECTION

SCALE NONE

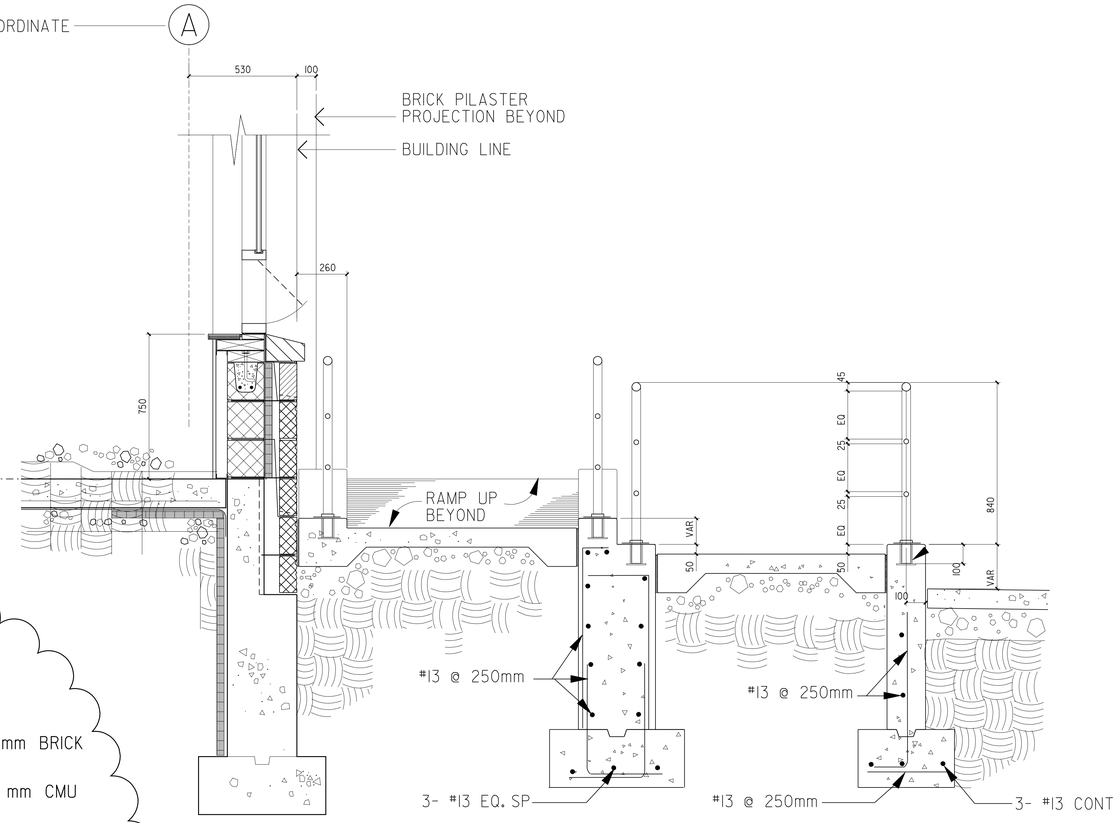

TYP RAILING @ RAMP

CROSS SECTION @ RAMP

SCALE 1:10

1

NOTE
1- TOP OF RAMP FOOTING IS
A MINIMUM OF 965MM BELOW GRADE.

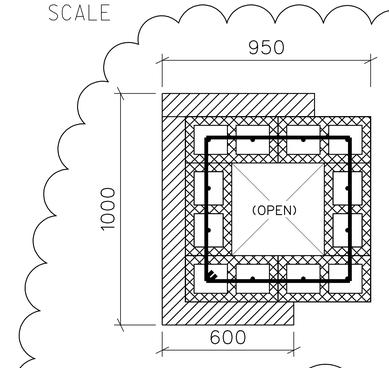

SECTION B S705
NOT TO SCALE

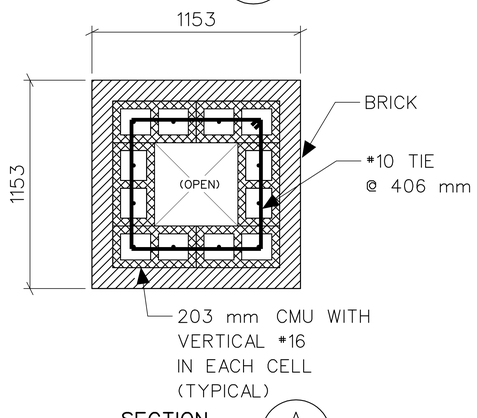

SECTION A S705
NOT TO SCALE

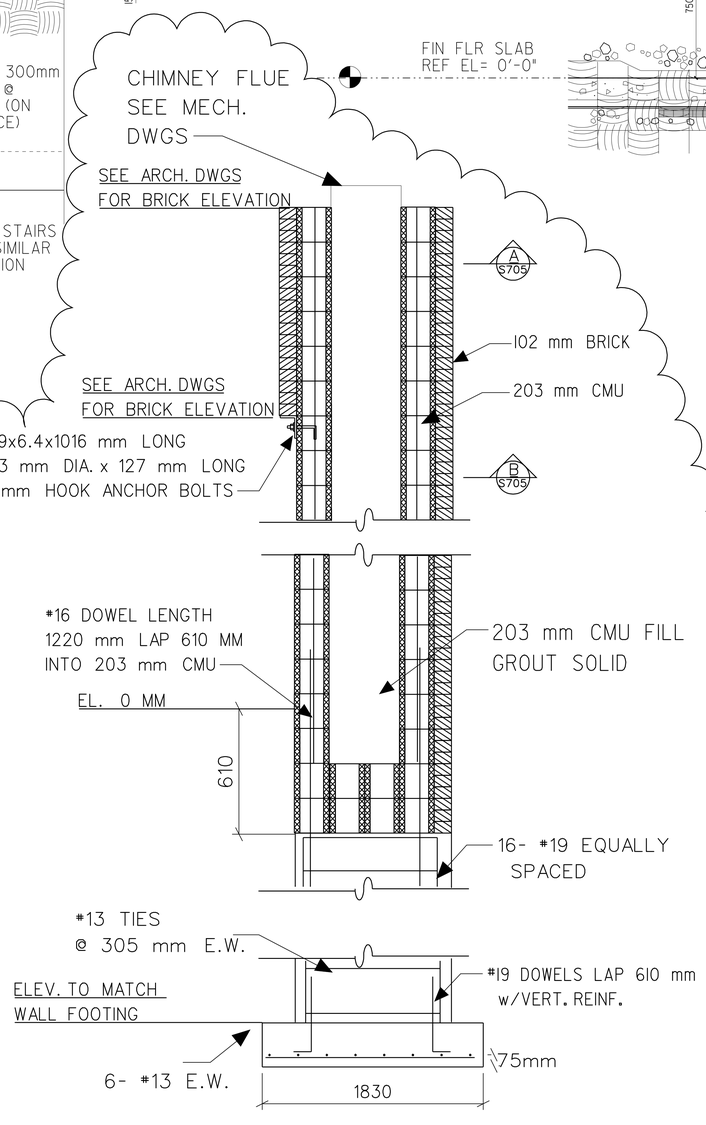

CHIMNEY SECTION

NOT TO SCALE

MISC. LINTEL SCHEDULE

NORTH ELEVATION	
Opening Width	
mm	USE
1930	203X203 w/2#13
SOUTH ELEVATION	
Opening Width	
mm	
1004	203X203 w/2#13
EAST ELEVATION	
Opening Width	
mm	
1004	203X203 w/2#13
WEST ELEVATION	
Opening Width	
mm	
1004	203X610 w/2#13

NOTE: ALL DIMENSIONS SHOWN ARE IN MILLIMETERS.

US Army Corps of Engineers
New York District

Symbol	Description	Date	Appr.
1	REVISION #1- MISC. LINTEL SCHEDULE, CHIMNEY & CHIMNEY SECTIONS	1/24/05	

Designed by: SOD
Dwn by: SOD
Ckd by:
Reviewed by:
Submitted by:
Date:
Size:
Rev:
Drawing file no:
Drawing code:
Plot date: 24-JAN-2005 15:32
File by: 24-JAN-2005
File: S:\Structural\Stairs\Structural\Stairs S-705.dgn

U.S. ARMY ENGINEER DISTRICT
CORPS OF ENGINEERS
NEW YORK, NEW YORK

PN 82224
MILITARY POLICE STATION
FORT HAMILTON, NY

FOUNDATION SECTIONS
AND DETAILS - 3

Sheet reference number:
S-705

Submitted by: eSendweb
S:\Structural\Stairs\Structural\Stairs S-705.dgn
Plot Date: 24-JAN-2005 15:32

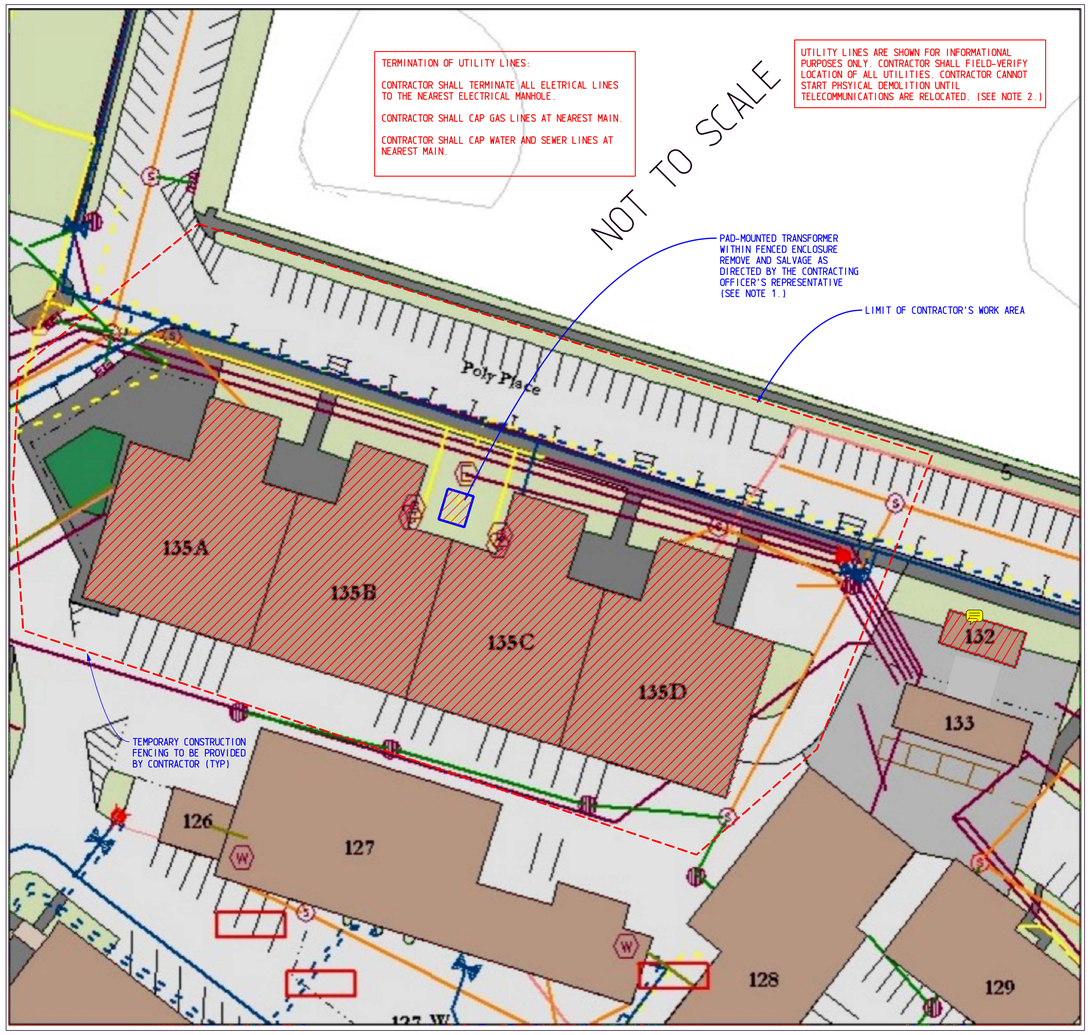

LEGEND

STORM SEWER LINE		ABANDONED SEWER LINE	
SANITARY SEWER LINE		ABANDONED SANITARY SEWER LINE	
COMBINATION LINE		ABANDONED COMBINATION LINE	
NATURAL GAS LINE		ABANDONED NATURAL GAS LINE	
WATER LINE		ABANDONED WATER LINE	
ELECTRICAL UNDERGROUND LINE			
COMMUNICATION LINES		LIMIT OF WORK AREA	
HEAT & COOL LINE			
CURB INLET, MANHOLE & DROP INLET (UNABLE TO LOCATE IN RED) (ABANDONED IN LIGHT BLUE)		TO BE DEMOLISHED	
WATER VALVE, FIRE HYDRANT & NATURAL GAS VALVE		FUEL TANK LOCATION	
		FENCE OR WALL	

ABBREVIATIONS:

CI	*CAST IRON*
DI	*DUCTILE IRON*
MHC	*COMBINATION SEWER MANHOLE*
MHD	*STORM SEWER MANHOLE*
MHDI	*CATCH BASIN/DRAIN INLET MANHOLE*
MHS	*SANITARY SEWER MANHOLE*
PVC	*POLYVINYL CHLORIDE*
RCP	*REINFORCED CONCRETE PIPE*
ST	*STEEL PIPE*
TBD	*TO BE DETERMINED*
VCP	*VITRIFIED CLAY PIPE*

NOTES

1. REMOVE PAD-MOUNTED TRANSFORMER, CONCRETE PAD AND FENCE ENCLOSURE. THE CONTRACTOR SHALL REMOVE 4160/2400 VOLT PRIMARY SERVICE LATERALS TO THE NEAREST ELECTRICAL MANHOLE, AND ALL SECONDARY CONDUCTORS AND CONDUITS SERVING THE APARTMENT COMPLEX, BLDG 135A THROUGH 135D.

2. THE CURRENT APARTMENT COMPLEX CONTAINS A 1600 PAIR VERIZON (TELEPHONE SERVICE) SERVING CUSTOMERS IN ADJACENT BUILDING COMPLEXES. THE CONTRACTOR SHALL COORDINATE RELOCATION OF VERIZON (TELEPHONE SERVICE) AFFECTED BY DEMOLITION. DEMOLITION OF THE BUILDINGS SHALL NOT BEGIN UNTIL ALL CUSTOMERS FROM ADJACENT BUILDINGS ARE RECONNECTED.

3. MATERIAL SALVAGED BY THE CONTRACTOR SHALL BE STORED AS APPROVED BY THE CONTRACTING OFFICER AND SHALL BE REMOVED FROM GOVERNMENT PROPERTY BEFORE COMPLETION OF THE CONTRACT. MATERIAL SALVAGED BY THE CONTRACTOR SHALL NOT BE SOLD ON THE SITE.

TYPICAL VIEWS OF BLDG 135

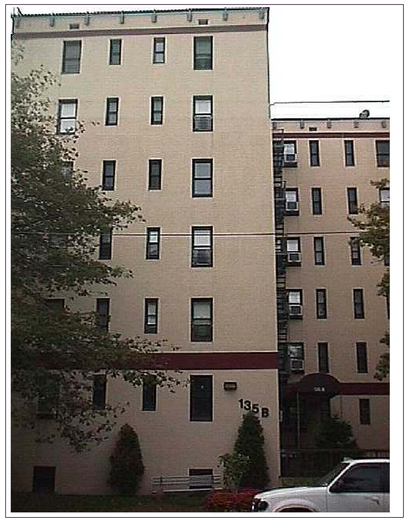

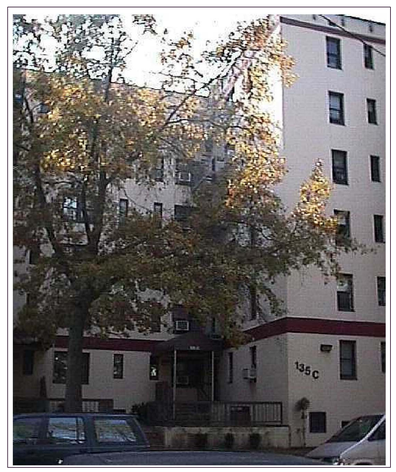

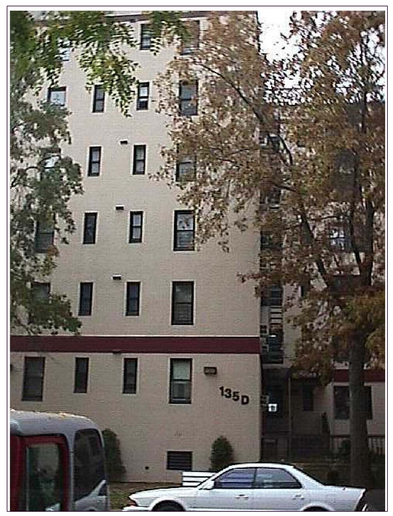

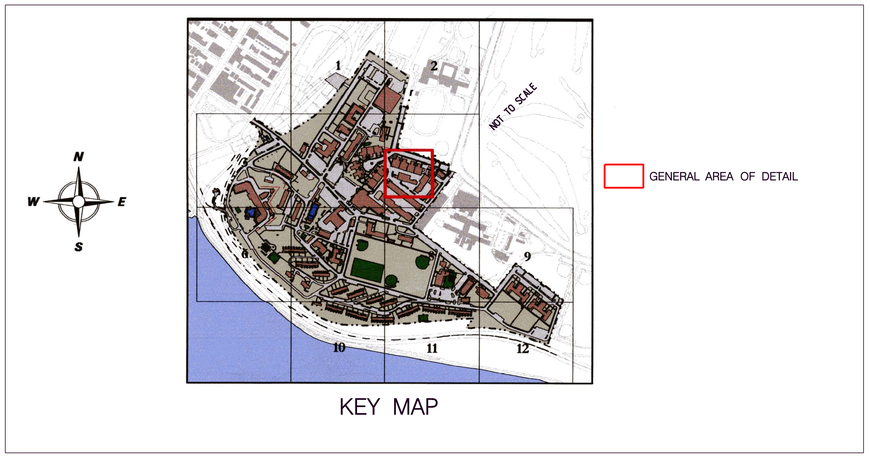

KEY MAP

US Army Corps of Engineers
New York District

Symbol	Description	Date	Appr.

Designed by:
Dwn by:
Ckd by:
Reviewed by:
Submitted by:
Date:
Drawing file no.:
Drawing code:
Plot date: 5-period
Plot by: Scale
Date: NO SCALE
Size: F
Rev.

U.S. ARMY ENGINEER DISTRICT
CORPS OF ENGINEERS
NEW YORK, NEW YORK

PN XXXXX
MILITARY POLICE STATION
FORT HAMILTON, NY

BUILDING 135 AND UTILITIES DEMOLITION SITE PLAN

Sheet reference number:
XD–001

Submitted by: USERNAME Plot Date: 03-MAR-YYYY HH:MM FILE NAME