U. S. ARMY ENGINEER DISTRICT

CORPS OF ENGINEERS

NEW YORK DISTRICT

# MILITARY POLICE STATION

## FORT HAMILTON, NEW YORK

Project No. 52224

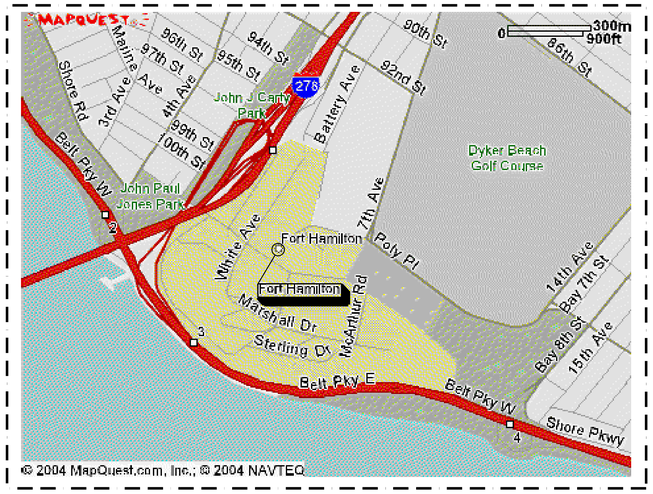


VICINITY MAP

DESIGN SUBMISSION

DECEMBER 2004

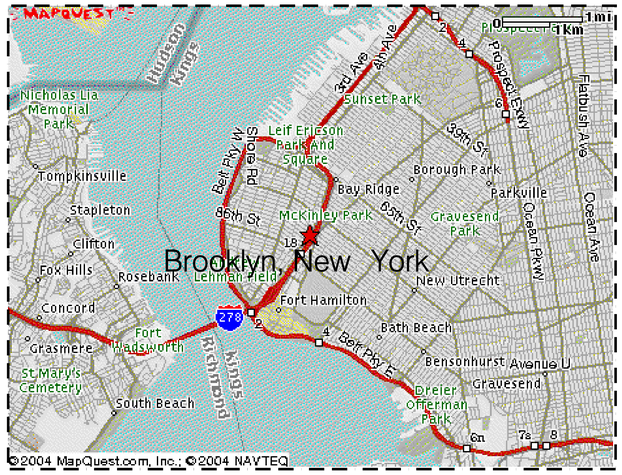


GENERAL MAP

US Army Corps of Engineers
New York District

| Symbol | Description | Date | Appr. |
|---|---|---|---|

Designed by:
Dwn by: Ckd by:
Reviewed by:
Submitted by:
Chief,
Date: Size: A1 Files:
Drawing file no.:
Drawing code:
Plot date: 05-JAN-2005 16:38
Plot by: eBenchko
Scale: 2.000000:1.000000
U.S. ARMY ENGINEER DISTRICT
CORPS OF ENGINEERS
NEW YORK, NEW YORK
File name: S:\Recom\military\Fort Hamilton\MPSta\gen\MPSta G-000.dgn

PN 52224
MILITARY POLICE STATION
FORT HAMILTON, NY

COVER SHEET

Sheet reference number:
G–000

# INDEX OF DRAWINGS

| SHEET NO. | FILE NO. | DRAWING TITLE | SHEET NO. | FILE NO. | DRAWING TITLE | SHEET NO. | FILE NO. | DRAWING TITLE |
|---|---|---|---|---|---|---|---|---|
| G-000 | 7582-81300 | COVER SHEET | A-603 | 7582-81347 | WINDOW & LOUVER SCHEDULE | | | **PLUMBING** |
| G-001 | 7582-81301 | INDEX OF DRAWINGS | LS-101 | 7582-81348 | LIFE SAFETY PLAN | P-001 | 7582-81393 | SYMBOLS & ABBREVIATIONS-PLUMBING |
| G-002 | 7582-81302 | ABBREVIATIONS, SYMBOLS, & LEGEND | | | | P-100 | 7582-81394 | BASEMENT FLOOR PLAN- PLUMBING |
| | | | | | **STRUCTURAL** | P-101 | 7582-81395 | FIRST FLOOR PLAN-PLUMBING |
| | | **CIVIL** | S-001 | 7582-81349 | GENERAL NOTES | P-102 | 7582-81396 | SECOND FLOOR PAN- PLUMBING |
| C-1 | 7582-81303 | DEMOLITION PLAN | S-701 | 7582-81350 | FOUNDATION PLAN | P-400 | 7582-81397 | PLUMBING PART PLANS |
| C-2 | 7582-81304 | SITE PLAN | S-702 | 7582-81351 | FOUNDATION, SLAB SECTIONS & DETAILS | | | |
| C-3 | 7582-81305 | GRADING AND DRAINAGE PLAN | S-703 | 7582-81352 | SLAB PLAN FIRST FLOOR | | | **FIRE PROTECTION** |
| C-4 | 7582-81306 | UTILITY PLAN | S-704 | 7582-81353 | FOUNDATION SECTIONS & DETAILS-2 | FP-100 | 7582-81398 | BASEMENT FLOOR PLAN- FIRE PROTECTION |
| C-5 | 7582-81307 | EROSION CONTROL PLAN | S-705 | 7582-81354 | FOUNDATION SECTIONS & DETAILS-3 | FP-101 | 7582-81399 | FIRST FLOOR PLAN- FIRE PROTECTION |
| C-6 | 7582-81308 | SITE DETAILS 1 | S-100 | 7582-81355 | BASEMENT SLAB PLAN | FP-102 | 7582-81400 | SECOND FLOOR PLAN- FIRE PROTECTION |
| C-7 | 7582-81309 | SITE DETAILS 2 | S-101 | 7582-81356 | FIRST FLOOR FRAMING PLAN | FP-600 | 7582-81401 | RISER, NOTES & SCHEDULE |
| C-8 | 7582-81310 | SITE DETAILS 3 | S-102 | 7582-81357 | SECOND FLOOR FRAMING PLAN | | | |
| C-9 | 7582-81311 | SOIL EROSION AND SEDIMENTATION CONTROL DETAILS | S-103 | 7582-81358 | ATTIC FLOOR FRAMING PLAN | | | **ELECTRICAL** |
| C-10 | 7582-81312 | FENCE DETAILS 1 | S-104 | 7582-81359 | ROOF FRAMING PLAN | E-001 | 7582-81402 | ELECTRICAL LEGEND, NOTES , & SYMBOLS |
| C-11 | 7582-81313 | FENCE DETAILS 2 | S-105 | 7582-81360 | COLUMN SCHEDULE | E-100 | 7582-81403 | LIGHTING BASEMENT |
| C-12 | 7582-81314 | SLIDE GATE DETAILS | S-106 | 7582-81361 | MISCELLANEOUS STEEL SECTION DETAILS | E-101 | 7582-81404 | LIGHTING FIRST FLOOR |
| | | | S-107 | 7582-81362 | ROOF SECTION & DETAILS-A | E-102 | 7582-81405 | LIGHTING SECOND FLOOR |
| | | **ARCHITECTURAL** | S-108 | 7582-81363 | ROOF SECTIONS & DETAILS-B | E-103 | 7582-81406 | LIGHTING AND PART ATTIC |
| A-100 | 7582-81315 | BASEMENT PLAN | S-109 | 7582-81364 | CANOPY DETAILS-1 | E-104 | 7582-81407 | POWER BASEMENT |
| A-101 | 7582-81316 | FIRST FLOOR PLAN | S-110 | 7582-81365 | CANOPY DETAILS-2 | E-105 | 7582-81408 | POWER FIRST FLOOR |
| A-102 | 7582-81317 | SECOND FLOOR PLAN | | | | E-106 | 7582-81409 | POWER SECOND FLOOR |
| A-103 | 7582-81318 | ATTIC PLAN | | | **MECHANICAL** | E-500 | 7582-81410 | ELECTRICAL ONE LINE DIAGRAM |
| A-104 | 7582-81319 | ROOF PLAN | M-001 | 7582-81366 | SYMBOLS & ABBREVIATIONS-HVAC | E-501 | 7582-81411 | GENERATOR POWER AND LIGHTING PLAN |
| A-105 | 7582-81320 | BASEMENT REFLECTED CEILING PLAN | M-100 | 7582-81367 | BASEMENT FLOOR PLAN DUCTWORK | E-502 | 7582-81412 | ELECTRICAL & COMMUNICATIONS SITE PLAN |
| A-106 | 7582-81321 | FIRST FLOOR REFLECTED CEILING PLAN | M-101 | 7582-81368 | FIRST FLOOR PLAN DUCTWORK | E-503 | 7582-81413 | ELECTRICAL DETAILS |
| A-107 | 7582-81322 | SECOND FLOOR REFLECTED CEILING PLAN | M-102 | 7582-81369 | SECOND FLOOR PLAN DUCTWORK | E-504 | 7582-81414 | ELECTRICAL PANEL SCHEDULES |
| A-108 | 7582-81323 | FLOOR TILE PATTERN @ BASEMENT LEVEL | M-103 | 7582-81370 | ATTIC FLOOR PLAN DUCTWORK | E-505 | 7582-81415 | BUILDING AND BASE WIDE FIRE ALARM |
| A-109 | 7582-81324 | FLOOR TILE PATTERN @ FIRST FLOOR | M-104 | 7582-81371 | BASEMENT FLOOR PLAN PIPING | E-601 | 7582-81416 | LIGHTING FIXTURES DETAILS AND SCHEDULE |
| A-110 | 7582-81325 | FLOOR TILE PATTERN @ SECOND FLOOR | M-105 | 7582-81372 | FIRST FLOOR PLAN PIPING | E-602 | 7582-81417 | TRANSFORMER INSTALLATION DETAILS |
| A-200 | 7582-81326 | BUILDING ELEVATIONS | M-106 | 7582-81373 | SECOND FLOOR PLAN PIPING | E-700 | 7582-81418 | CCTV, PUBLIC ADDRESS, & FIRE ALARM SYSTEM-FIRST FLOOR |
| A-300 | 7582-81327 | BUILDING LONGITUDINAL & CROSS SECTIONS | M-107 | 7582-81374 | ATTIC FLOOR PLAN PIPING | E-701 | 7582-81419 | CCTV, PUBLIC ADDRESS, & FIRE ALARM SYSTEM- SECOND FLOOR |
| A-301 | 7582-81328 | BUILDING LONGITUDINAL & CROSS SECTIONS | M-500 | 7582-81375 | SEISMIC BRACING AND SUPPORT DETAILS-1 | E-702 | 7582-81420 | CCTV, PUBLIC ADDRESS, & FIRE ALARM SYSTEM- THIRD FLOOR |
| A-302 | 7582-81329 | WALL SECTIONS | M-501 | 7582-81376 | SEISMIC BRACING AND SUPPORT DETAILS-2 | E-703 | 7582-81421 | SECURITY RISER DIAGRAM |
| A-303 | 7582-81330 | SECTION THRU LOBBY | M-502 | 7582-81377 | PIPING SUPPORT DETAILS | E-704 | 7582-81422 | CCTV INTERIOR RISER DIAGRAM |
| A-304 | 7582-81331 | WALL SECTIONS & MISC. DETAILS | M-503 | 7582-81378 | MECHANICAL DETAILS-1 | E-705 | 7582-81423 | PUBLIC ADDRESS SYSTEM |
| A-305 | 7582-81332 | STAIR DETAILS | M-504 | 7582-81379 | MECHANICAL DETAILS-2 | E-801 | 7582-81424 | ROOF LIGHTING AND GROUNDING PLAN |
| A-306 | 7582-81333 | NOT USED | M-505 | 7582-81380 | MECHANICAL DETAILS-3 | E-802 | 7582-81425 | LIGHTING AND GROUNDING EQUIPMENT DETAILS |
| A-400 | 7582-81334 | TOILET ROOM PLANS, ELEVATIONS & ACCESSORIES | M-600 | 7582-81381 | MECHANICAL SCHEDULE-1 | T-100 | 7582-81426 | TELECOMMUNICATIONS FIRST FLOOR |
| A-401 | 7582-81335 | TOILET ROOM PLANS, ELEVATIONS & ACCESSORIES | M-601 | 7582-81382 | MECHANICAL SCHEDULE-2 | T-101 | 7582-81427 | TELECOMMUNICATIONS SECOND FLOOR |
| A-402 | 7582-81336 | TOILET ROOM ACCESSORIES & DETAILS | M-602 | 7582-81383 | MECHANICAL SCHEDULE-3 | T-102 | 7582-81428 | TELECOMMUNICATIONS THIRD FLOOR |
| A-500 | 7582-81337 | COLUMN & MISC. DETAILS @ BASEMENT LEVEL | M-700 | 7582-81384 | HVAC CONTROLS LEGEND | T-103 | 7582-81429 | TELECOMMUNICATIONS DETAILS |
| A-501 | 7582-81338 | COLUMN & MISC. DETAILS @ FIRST FLOOR | M-701 | 7582-81385 | HVAC CONTROLS-AHU-1 SCHEMATIC & LADDER DIAGRAM | T-104 | 7582-81430 | TELECOMMUNICATIONS VOICE & DATA RISER |
| A-502 | 7582-81339 | COLUMN & MISC. DETAILS @ SECOND FLOOR | M-702 | 7582-81386 | HVAC CONTROLS-AHU-1 CONTROL LOGIC DIAGRAMS | T-105 | 7582-81431 | TELECOMMUNICATION DETAILS |
| A-503 | 7582-81340 | RAMP & PORTICO DETAILS | M-703 | 7582-81387 | HVAC CONTROLS-AHU-2 SCHEMATIC & LADDER DIAGRAM | | | |
| A-504 | 7582-81341 | PARTITION TYPES | M-704 | 7582-81388 | HVAC CONTROLS-AHU-2 CONTROL LOGIC DIAGRAMS | | | **TOPOGRAPHIC** |
| A-505 | 7582-81342 | MISCELLANEOUS DETAILS | M-705 | 7582-81389 | HVAC CONTROLS-B-1 SCHEMATIC & LADDER DIAGRAM | R-1 | 7582-81432 | TOPOGRAPHIC SURVEY |
| A-506 | 7582-81343 | FRONT DESK OFFICE & DETENTION CELLS | M-706 | 7582-81390 | HVAC CONTROLS-MISCELLANEOUS DETAILS | R-2 | 7582-81433 | SUBSURFACE EXPLORATION |
| A-600 | 7582-81344 | ROOM FINISH SCHEDULE | M-707 | 7582-81391 | HVAC CONTROLS-POINT SCHEDULE-1 | | | |
| A-601 | 7582-81345 | DOOR SCHEDULE, DOOR TYPES, & FRAMES | M-708 | 7582-81392 | HVAC CONTROLS-POINT SCHEDULE-2 | | | |
| A-602 | 7582-81346 | DOOR & ENTRY MAT DETAILS | | | | | | |

US Army Corps of Engineers
New York District

| Symbol | Description | Date | Appr. |
|---|---|---|---|

U.S. ARMY ENGINEER DISTRICT
CORPS OF ENGINEERS
NEW YORK, NEW YORK

Designed by: | Date: | Size: | Rev.:
Dwn by: | Ckd by: | Drawing file no.:
Reviewed by: | Drawing code:
Submitted by: | Plot date: 05-JAN-2005 16:38 | Plot by: admindve | Scale: 0.00000000000000

File name: S:\Benson\military\fortHamilton\MPBg\gar\MPBg_G-001.dgn

MILITARY POLICE STATION
FORT HAMILTON, NY

INDEX OF DRAWINGS

Sheet reference number:
G-001

Submitted by: e3endfab
Plot Date: 05-JAN-2005 16:38
Settler:admin:hur:gefort Hamilton:MPBg:dgn:MPBg G-001.dgn

# ABBREVIATIONS

| | |
|---|---|
| & | AND |
| @ | AT |
| A.B. | ANCHOR BOLT |
| ABV | ABOVE |
| ACST | ACOUSTIC / ACOUSTICAL |
| ACT | ACOUSTICAL CEILING TILE |
| ADA | AMERICANS W/ DISABILITIES ACT |
| AFF | ABOVE FINISHED FLOOR |
| AGG | AGGREGATE |
| AL / ALUM | ALUMINUM |
| APPROX | APPROXIMATELY |
| APPVD | APPROVED |
| ARCH / 'L | ARCHITECTURAL |
| ASSY | ASSEMBLY |
| ASTM | AMERICAN SOCIETY for TESTING & MATERIALS |
| BH | BUMPER HOOK |
| BIT / BITUM | BITUMINOUS |
| BLDG | BUILDING |
| BLK / BLKG. | BLOCK / BLOCKING |
| BM | BEAM |
| B.O. | BOTTOM OF / BY OTHERS |
| BOCA | BLDG OFFICIALS & CODES ADMIN |
| BOTT | BOTTOM |
| BRK | BRICK |
| BSMT | BASEMENT |
| B.U.R. | BUILT UP ROOF |
| C / [ | CHANNEL |
| CAB | CABINET |
| CAP | CAPACITY |
| CEM | CEMENT |
| CER | CERAMIC |
| CH | COAT HOOK |
| CI | CAST IRON |
| CIRC | CIRCULAR |
| C.J. | CONTROL / CONTRACTION JOINT |
| CL / ℄ | CENTER LINE |
| CLG | CEILING |
| CLO | CLOSET |
| COL | COLUMN |
| COR | CORNER |
| CORR | CORRIDOR |
| CORRUG | CORRUGATED |
| COMM | COMMUNICATION |
| CM | CENTIMETER |
| CMU | CONCRETE MASONRY UNIT |
| CONC | CONCRETE |
| CONN | CONNECTION |
| CONT | CONTINUOUS |
| CONST / 'N | CONSTRUCTION |
| CONTR | CONTRACTOR |
| CT | CERAMIC TILE |
| CTR | CENTER |
| CLR | CLEAR |
| DEG. | DEGREE |
| DEMO | DEMOLITION |
| DET | DETAIL |
| DF | DRINKING FOUNTAIN |
| DIA. / ϕ | DIAMETER |
| DIM | DIMENSION |
| DN | DOWN |
| D.S. | DOWNSPOUT |
| DWG | DRAWING |
| E | EAST / ELEVATOR |
| EA | EACH |
| EIFS | EXTERIOR INSULATION FINISH SYSTEM |
| E.J. | EXPANSION JOINT |
| EL / ELEV | ELEVATION/ELEVATOR |
| ELECT / 'L | ELECTRIC/ELECTRICAL |
| EMG | EMERGENCY |
| EMR | ELEVATOR MACHINE ROOM |
| EQ | EQUAL |
| EQUIP / EQPT | EQUIPMENT |
| ETC | ETCETERA |
| EWC | ELECTRIC WATER COOLER |
| E.W. / E.F. | EACH WAY / EACH FACE |
| EXIST / 'G | EXISTING |
| EXP | EXPANSION |
| EXT | EXTERIOR |
| FD | FLOOR DRAIN |
| F.E.C. | FIRE EXTINGUISHER CABINET |
| FDN / FOUND | FOUNDATION |
| FF | FINISHED FLOOR |
| FFE | FINISHED FLOOR ELEVATION |
| FIN | FINISH/FINISHED |
| FIXT | FIXTURE |
| FL / FLR | FLOOR |
| FLSG | FLASHING |
| FLUOR | FLUORESCENT |
| FPSC | FIREPROOFED SELF CLOSING |
| F.R. | FIRE RATED / FIRE RESISTANT |
| FT | FOOT |
| GA | GAUGE |
| GALV | GALVANIZED |
| GB | GRAB BAR |
| GC | GENERAL CONTRACTOR |
| GEN | GENERAL |
| GI | GALVANIZED IRON |
| GL | GLASS |
| GWB | GYPSUM WALL BOARD |
| GYP BRD | GYPSUM BOARD |
| H.C. | HANDICAPPED (HANDICAP EQUIPPED) |
| HDW | HARDWARE |
| HM | HOLLOW METAL |
| HMD | HOLLOW METAL DOOR |
| HOR | HORIZONTAL |
| HP | HIGH POINT |
| HR | HOUR |
| HT / HGT | HEIGHT |
| HVAC | HEATING VENTING & AIR CONDITIONING |
| ID | IDENTIFICATION/INSIDE DIMENSION |
| IN | INCH |
| INCL | INCLUDING |
| INSUL | INSULATION |
| INT | INTERIOR |
| J / JAN | JANITOR |
| J.C. | JANITOR'S CLOSET |
| JT | JOINT |
| K | KILO (1 THOUSAND) |
| L | ANGLE/LAVATORY |
| LAV | LAVATORY |
| LB / # | POUND |
| L.F. | LINEAR FOOT |
| LH | LAVATORY HANDICAPPED |
| LLH | LONGER LEG HORIZONTAL |
| LLV | LONGER LEG VERTICAL |
| LOUV / LVR | LOUVER |
| LP | LOW POINT |
| LT WT | LIGHTWEIGHT |
| M | METER |
| MAT'L | MATERIAL |
| MAX | MAXIMUM |
| MECH / 'L | MECHANICAL |
| MET/MTL | METAL |
| MFR/MANUF | MANUFACTURER |
| MG | MIRROR GLASS |
| MGR/MGMT | MANAGER/MANAGEMENT |
| MIL | MILITARY |
| MIN | MINIMUM |
| MISC | MISCELLANEOUS |
| MLDG | MOULDING |
| MM | MILLIMETER |
| MO | MASONRY OPENING |
| MSRY | MASONRY |
| N / No | NORTH |
| NIC | NOT IN CONTRACT |
| No / # | NUMBER |
| NOM | NOMINAL |
| NTS | NOT TO SCALE |
| OC | ON CENTER |
| OD | OUTSIDE DIAMETER |
| OHD | OVERHEAD DOOR |
| OPNG | OPENING |
| OPP | OPPOSITE |
| OSHA | OCCUPATIONAL SAFETY & HEALTH ADMINISTRATION |
| P / PTD | PAINT/PAINTED |
| PAN | PANEL |
| PART / 'N | PARTITION |
| PERF | PERFORATED |
| PERIM | PERIMETER |
| PERP | PERPENDICULAR |
| PL / ℘ | PLATE |
| PL GL | PLATE GLASS |
| PLAS | PLASTER |
| PLAS LAM | PLASTIC LAMINATED |
| PLTFM | PLATFORM |
| PLYWD | PLYWOOD |
| PREFAB | PREFABRICATED |
| PREFIN | PREFINISHED |
| PREM | PREMOULDED |
| PT | POINT / PORCELAIN TILE |
| P.T. | PRESSURE TREATED (LUMBER) |
| PTD | PAPER TOWEL DISPENSER / PAINTED |
| PVMT | PAVEMENT |
| QLTY | QUALITY |
| QLFY | QUALIFY |
| QT | QUARRY TILE / QUART |
| QTY | QUANTITY |
| R | RISER / RADIUS |
| RAD | RADIATOR / RADIUS |
| REF | REFERENCE / REFRIGERATOR |
| REINF / 'MT | REINFORCED / REINFORCEMENT |
| REQ / 'D | REQUIRED |
| RLG | RAILING |
| RM | ROOM |
| R.O. | ROUGH OPENING |
| S / So | SOUTH / SINK |
| SCHED | SCHEDULE |
| SD | SOAP DISPENSER |
| SDH | SOAP DISPENSER HANDICAPPED |
| SECT'Y | SECURITY / SECRETARY |
| SECT | SECTION |
| SHO | SHOWER |
| SHT | SHEET |
| SHT'G | SHEATHING |
| SIM | SIMILAR |
| SKYLT | SKYLIGHT |
| SL | SLOPE |
| SMACNA | SHEET METAL & AIR CONDITIONING NATIONAL ASSOCIATION, inc. |
| SND | SANITARY NAPKIN DISPOSAL |
| SNTD | SANITARY NAPKIN & TAMPON DISPENSER |
| SPECS | SPECIFICATIONS |
| SQ | SQUARE |
| SS | SERVICE/SLOP SINK |
| SSMRS | STANDING SEAM METAL ROOF SYSTEM |
| STA | STATION |
| STAGG | STAGGERED |
| STD | STANDARD |
| STO | STORAGE |
| STL | STEEL |
| ST. STL | STAINLESS STEEL |
| STRUCT / 'L | STRUCTURAL |
| STY | STOREY |
| SUSP | SUSPENDED |
| SYM | SYMMETRICAL |
| SYS | SYSTEM |
| T | TREAD / TELEPHONE |
| T&B | TOP & BOTTOM |
| TECH | TECHNICAL |
| TEL | TELEPHONE |
| TEMP | TEMPORARY / TEMPERATURE |
| THK. / t | THICKNESS |
| T.O.G. | TOP OF GRATE / GRADE |
| T.O.M. | TOP OF MASONRY |
| T.O.S. | TOP OF STEEL |
| T.O.SL. | TOP OF SLAB |
| T.O.W. | TOP OF WALL |
| TTD | TOILET TISSUE DISPENSER |
| TYP | TYPICAL |
| U | URINAL |
| UC | UNDERCUT |
| UG | UNDERGROUND |
| UH | URINAL HANDICAPPED |
| UL | UNITED LAVORATORIES |
| U.O.N. | UNLESS OTHERWISE NOTED |
| VAN | VANITY |
| VAR | VARIES |
| VCT | VINYL COMPOSITION TILE |
| VER | VERIFY |
| VERT | VERTICAL |
| VEST | VESTIBULE |
| W | WEST |
| W/ | WITH |
| W/C | WHICH |
| WC | WATER CLOSET |
| WCH | WATER CLOSET HANDICAPPED |
| WD | WOOD |
| WDO | WINDOW |
| WGL | WIRE GLASS |
| W.P. | WATER/WEATHER PROOF |
| W.R. | WATER RESISTANT |
| WT | WEIGHT |
| WWF | WELDED WIRE FABRIC |
| WWM | WELDED WIRE MESH |
| X | UNKNOWN / CROSS / DELETE |
| YD | YARD |
| YR | YEAR |

NOTE:

SEE OTHER ABBREVIATIONS, LEGENDS AND SYMBOLS AS PROVIDED IN EACH DISCIPLINE.

# GRAPHIC SYMBOLS

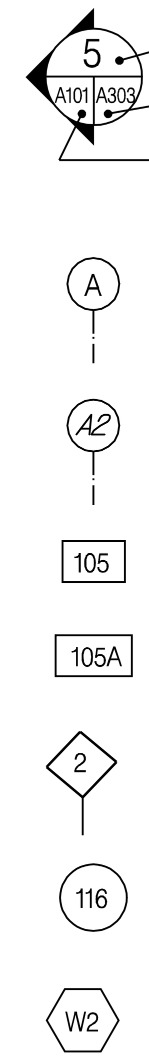


ELEV / SECT OR DET NUMBER

SHEET WHERE ITEM IS DRAWN

SHEET WHERE CONDITION IS TAKEN FROM

COLUMN COORDINATE

PILASTER COORDINATE

ROOM NUMBER

AREA NUMBER

PARTITION TYPE

DOOR TYPE

WINDOW TYPE

# MATERIAL LEGEND

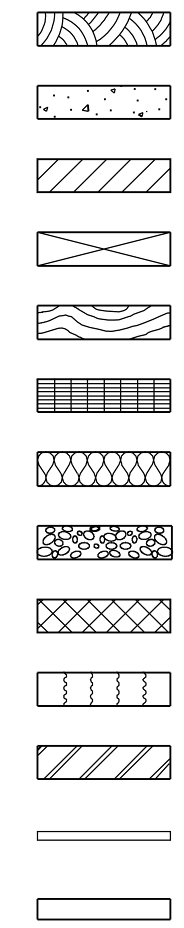

EARTH

CONCRETE

BRICK

ROUGH LUMBER

FINISHED LUMBER

INSULATION (RIGID)

INSULATION (BATT)

CRUSHED STONE

CONCRETE MASONRY UNIT

CERAMIC / QUARRY TILE

METAL (LARGE SCALE)

METAL (SMALL SCALE)

GWB ON METAL STUDS PARTITION

NOTE: ALL DIMENSIONS SHOWN ARE IN MILLIMETERS.

US Army Corps of Engineers
New York District

Symbol | Description | Date | Appr.

U.S. ARMY ENGINEER DISTRICT
CORPS OF ENGINEERS
NEW YORK, NEW YORK

Designed by: | Dwn by: | Ckd by: | Reviewed by: | Submitted by:

Date: | Size: | Rev.: | Drawing file no.: | Drawing code:

Plot date: 05-JAN-2005 16:22
Plot by: e3endfwb
Scale: 0.003281:1.000000

File name: S:\fileroom\military\Fort Hamilton\MPSta\Architectural\MPSta A-T002.dgn

PN 52224
MILITARY POLICE STATION
FORT HAMILTON, NY

ABBREVIATIONS
LEGEND & SYMBOLS

Sheet reference number:

G-002

Submitted by: e3endfwb
Plot Date: 05-JAN-2005 16:22
S:\fileroom\military\Fort Hamilton\MPSta\Architectural\MPSta A-T002.dgn

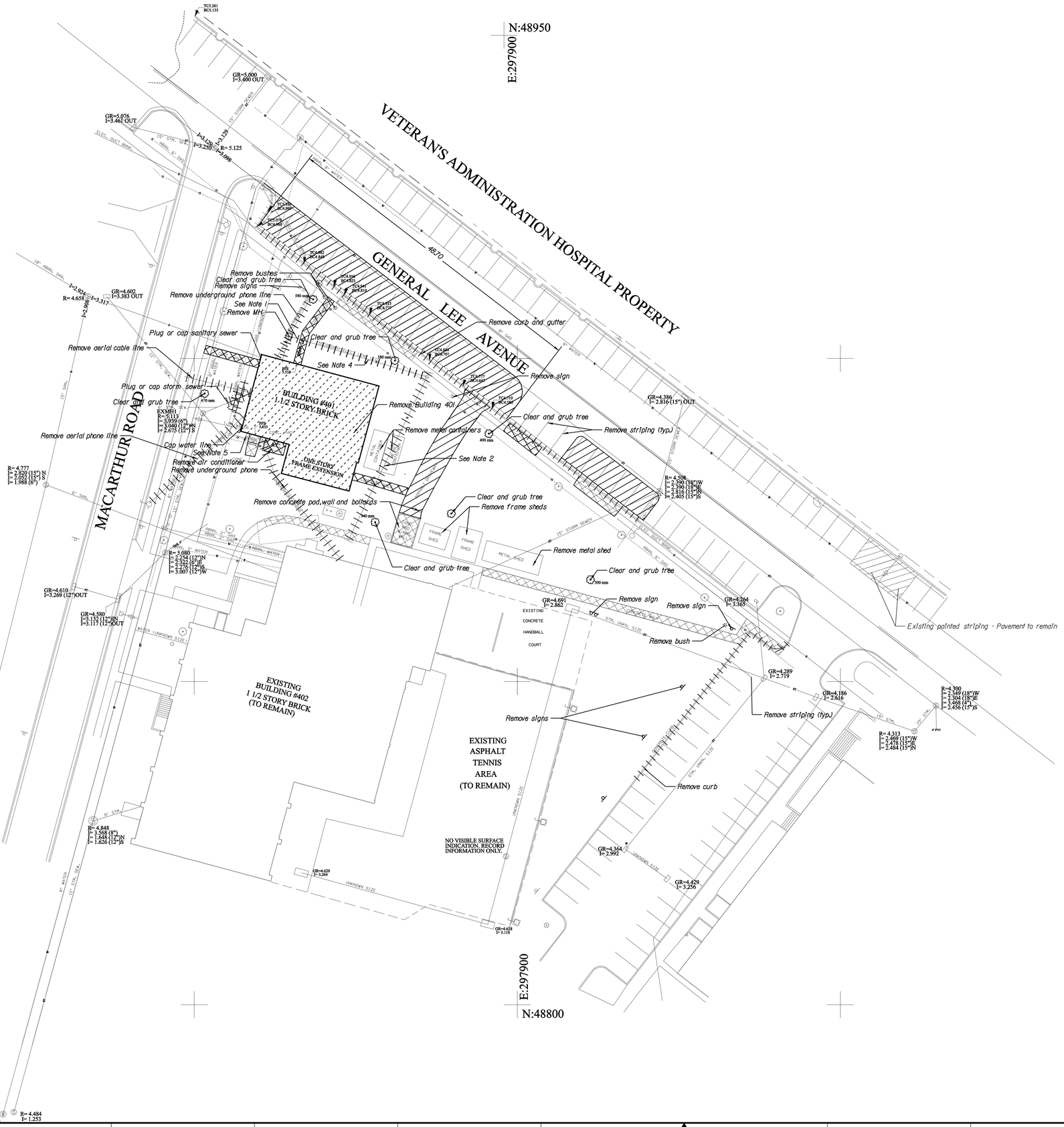


Legend

- Bituminous Pavement to be removed
- Concrete pavement to be removed
- Remove Building 401

Notes:
1. Remove electrical service for Building 401.
2. Remove 1-4" and 1-3" conduit service to Building 402.
3. Trees not indicated to be removed shall be protected from damage in accordance with spec. section 02220, Demolition.
4. Remove 1-4" conduit.
5. Cap 2" gas line at main.

5 0 5 10 15 20m

SCALE: 1:250

NOTE: ALL DIMENSIONS SHOWN ARE IN MILLIMETERS.

US Army Corps of Engineers
New York District

| Symbol | Description | Date | Appr. |
|---|---|---|---|

| | | | |
|---|---|---|---|
| Designed by: | | Date: | Size: / Rev: |
| Dwn by: | Ckd by: | Drawing file no.: | |
| Reviewed by: | | Drawing code: | |
| Submitted by: | | Plot date: 05-JAN-2006 16:22<br>Plot file: ldp0001.dgn<br>Scale: 250.000000:1.000000 | |

U.S. ARMY ENGINEER DISTRICT
CORPS OF ENGINEERS
NEW YORK, NEW YORK

File name: S:\Manuals\Military\Cad Variation\MPDs\CD\LMP-MED-D20001.dgn

PN: 52024
MILITARY POLICE STATION
FORT HAMILTON, NY

# DEMOLITION PLAN

Sheet reference number:
C–001

Submitted by: eZendrwb
Settings: submitter/default HamiltonMP\Specs\MP\Fac-D20001.cgn
Plot Date: 05-JAN-2005 16:22

VETERAN'S ADMINISTRATION HOSPITAL PROPERTY

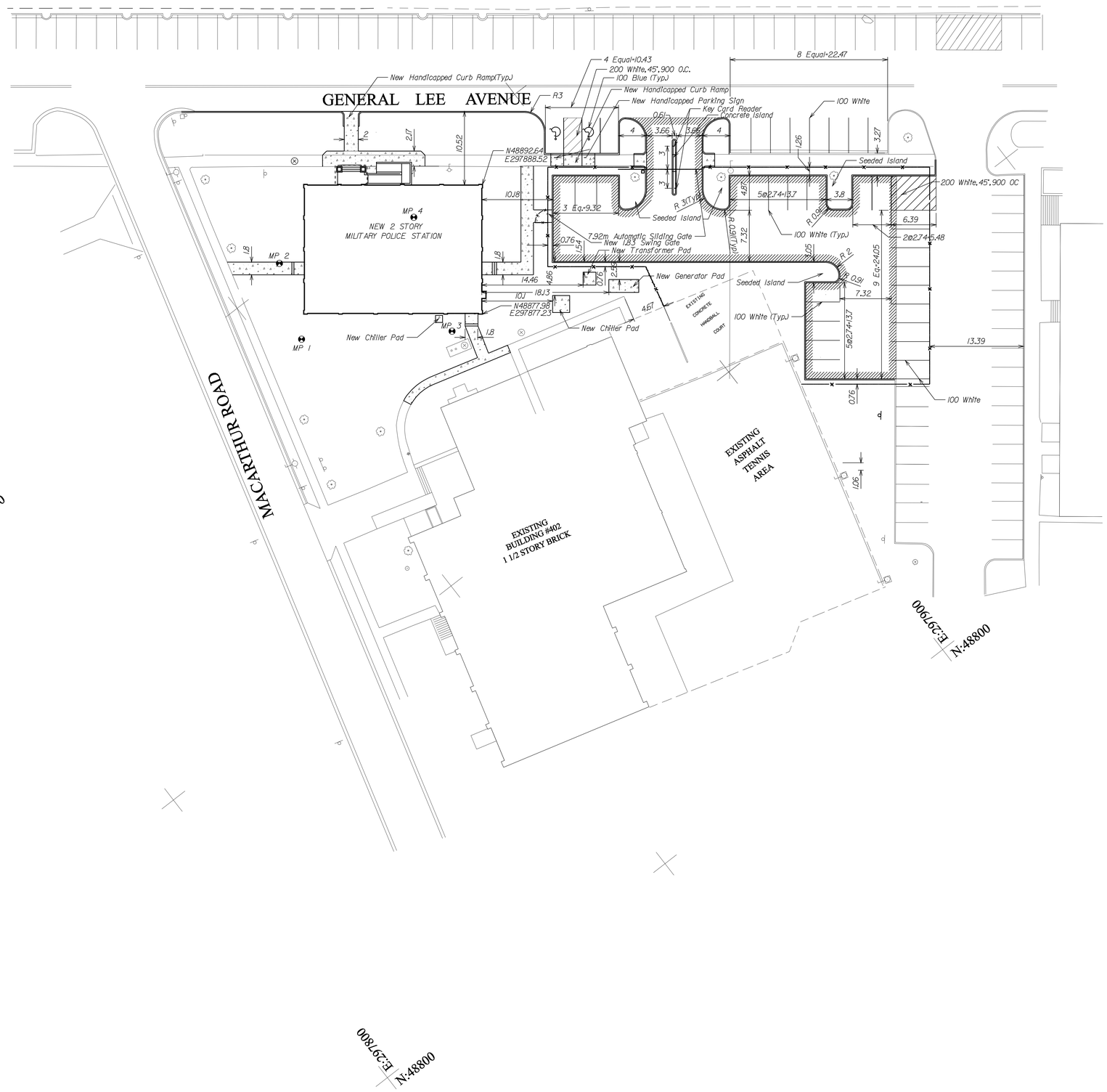


LEGEND

- New Bituminous Pavement
- New 1.83 m High Chain Link Fence with one Outrigger
- New Concrete Pavement
- New Concrete Curb
- MP 1 — Boring

SCALE: 1:250

NOTE: ALL DIMENSIONS SHOWN ARE IN MILLIMETERS.

US Army Corps of Engineers
New York District

U.S. ARMY ENGINEER DISTRICT
CORPS OF ENGINEERS
NEW YORK, NEW YORK

Designed by: | Date: | Rev.
Dwn by: | Ckd by: | Drawing file no.:
Reviewed by: | Drawing code:
Submitted by: | Plot date: 05-JAN-2006 16:23 | Plot by: eSandfeb | Scale: 250.0000000:1.000000

File name: S:\Division\Military\Fort Hamilton\MilitaryPolice\Site\C-SP000.dgn

PN 62024
MILITARY POLICE STATION
FORT HAMILTON, NY

SITE PLAN

Sheet reference number:
C-002

Submitted by: eSandfeb
pathfinder\admin\bigpfor: hamilton\MP\Site\C-SP000.dgn
Plot Date: 05-JAN-2005 16:23

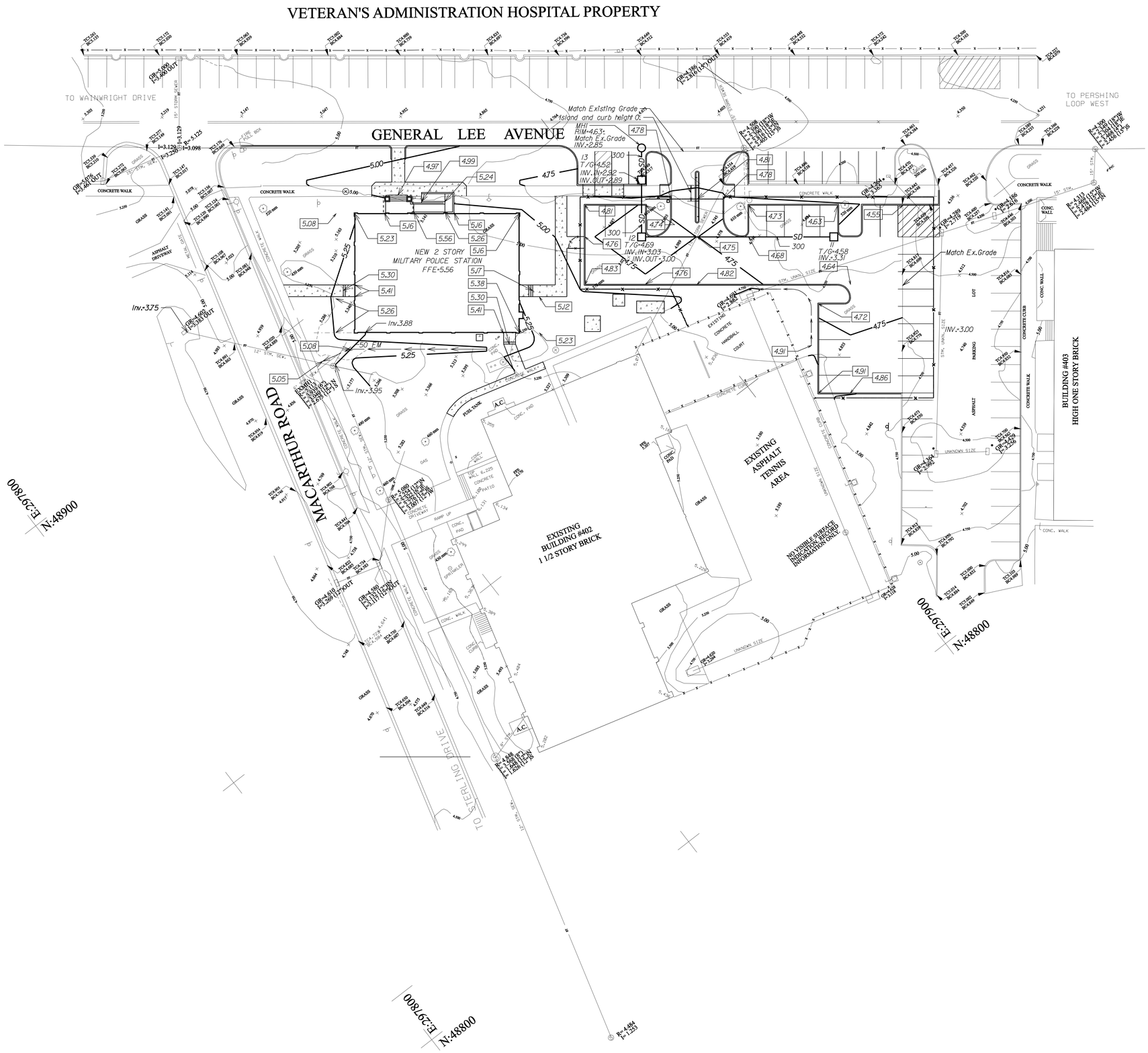

LEGEND

| EXISTING | NEW | |
|---|---|---|
| 4.250 | 5.00 | CONTOUR |
| 4.702 | 4.88 | SPOT ELEVATION |
| | | STORM DRAIN INLET |
| 15" STM. | SD 50 FM | STORM DRAIN / FORCE MAIN |

Notes:
1. Match existing grade where new pavement intersects existing pavement.
2. Topsoil and seed areas disturbed by construction which are not paved.
3. For roof drain information, see Sheet C-8.
4. Exterior landings at all doorways shall match the finished floor at the building and slope away from the building at 2%.

SCALE: 1:250

NOTE: ALL DIMENSIONS SHOWN ARE IN MILLIMETERS.

US Army Corps of Engineers
New York District

| Rev. | Date | Description | Drawn |
|---|---|---|---|

U.S. ARMY ENGINEER DISTRICT
CORPS OF ENGINEERS
NEW YORK, NEW YORK

Designed by: | Date: | Size: | No.
Dwn by: | Ckd by: | Drawing file no.:
Reviewed by: | Drawing code:
Submitted by: | Plot date: 05-JAN-2005 16:23 | Plot by: administrator | Scale: 250.000000:1.000000
File name: S:\Jackson\military\Fort Hamilton\Office Civil\MPSoil_GP000.dgn

PN. 92024
MILITARY POLICE STATION
FORT HAMILTON, NY

GRADING AND DRAINAGE PLAN

Sheet reference number:
C-003

Submitted by: a3endfeb
Plot Date: 05-JAN-2005 16:23
S:\Jackson\military\Fort Hamilton\Office Civil\MPSoil_GP000.dgn

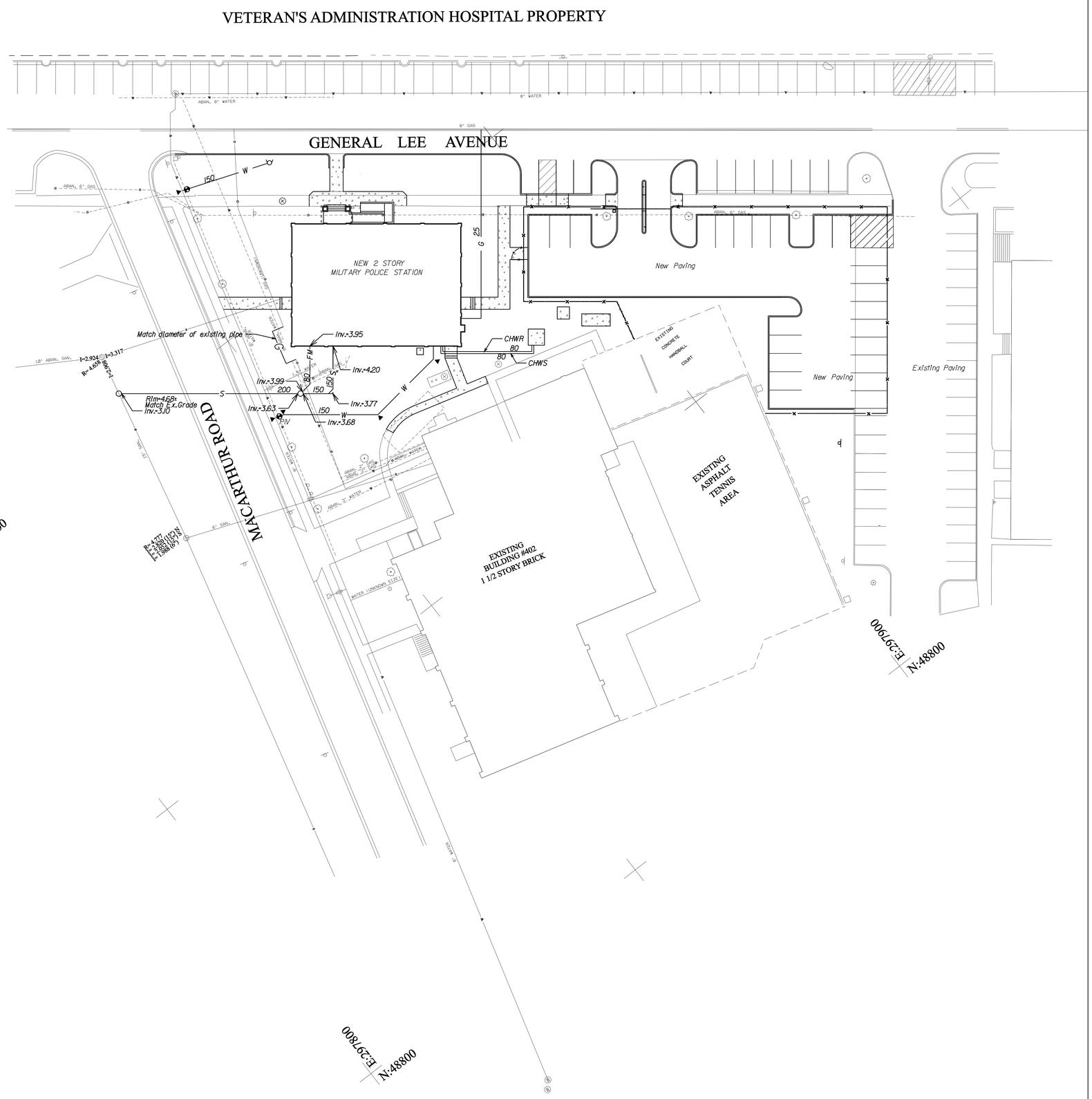


LEGEND

| EXISTING | NEW | |
|---|---|---|
| | —FM— | FORCE MAIN |
| —WATER— | —W— | WATER LINE |
| —15" SAN— | —S— | SANITARY SEWER |
| —8" GAS— | —G— | GAS LINE |
| | | FIRE HYDRANT |
| | | GATE VALVE |
| | ▲ | THRUST BLOCK |
| | ○ | SANITARY MANHOLE |
| | ⊥ | CLEANOUT |
| | PIV | POST INDICATOR VALVE |
| | | FIRE HYDRANT |

Notes:
1.The contractor shall verify the location and elevation of all existing utilities.
2.The contractor shall restore to its original condition all pavement and curbing that is removed or damaged during construction.
3.For electrical and telecommunication lines,see Sheet E-502.
4.For relocation of the existing gas line and installation of the new gas line,the Contractor shall hire Keyspan or a Keyspan approved contractor.At Keyspan,contact Barry Allen at 516 545-3864.

SCALE: 1:250

NOTE: ALL DIMENSIONS SHOWN ARE IN MILLIMETERS.

US Army Corps of Engineers
New York District

| Rev. | Date | Description | Approved |
|---|---|---|---|

U.S. ARMY ENGINEER DISTRICT
CORPS OF ENGINEERS
NEW YORK, NEW YORK

Designed by: | Date: | State: | Rev.
Dwn by: | Ckd by: | Drawing file no.:
Reviewed by: | Drawing code:
Submitted by: | Plot date: 05-JAN-2006 16:23 | Plot by: eJenaFeb | Scale: 250.0000000:1.000000
File name: S:\Division\Military\Fort Hamilton\MilitaryPolice\UtilityPlan.dgn

PN 62024
MILITARY POLICE STATION
FORT HAMILTON, NY

UTILITY PLAN

Sheet reference number:
C-004

Submitted by: eJenaFeb
partitionadmin\bcgyder Hamilton\MPS\Tasks\UtilityPlan.dgn
Plot Date: 05-JAN-2005 16:23

LEGEND

— SF — Silt Fence

SCALE: 1:250

NOTE: ALL DIMENSIONS SHOWN ARE IN MILLIMETERS.

US Army Corps of Engineers
New York District

| Rev. | Date | Description | Approved |
|---|---|---|---|

| | | | |
|---|---|---|---|
| U.S. ARMY ENGINEER DISTRICT CORPS OF ENGINEERS NEW YORK, NEW YORK | Designed by: | Date: | Size: |
| | Dwn by: | Ckd by: | Drawing file no.: |
| | Reviewed by: | | Drawing code: |
| | Submitted by: | | File date: 05-JAN-2006 16:23 Plot by: sdwhite Scale: 250.000000:1.000000 |

File name: S:\Jackson\military\Fort Hamilton\Office Civil\PN52_C-0000.dgn

PN 52024
MILITARY POLICE STATION
FORT HAMILTON, NY

# EROSION CONTROL PLAN

Sheet reference number:
C–005

Submitted by: sdwhite
Plot Date: 05-JAN-2006 16:23
S:\Jackson\military\Fort Hamilton\Office Civil\PN52_C-0000.dgn

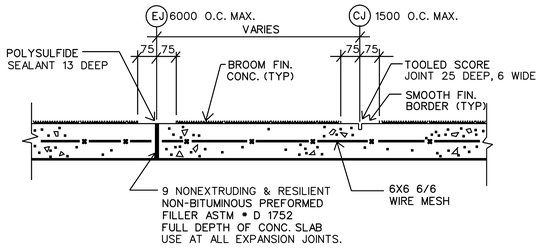


E.J.-C.J. DETAIL

N.T.S.

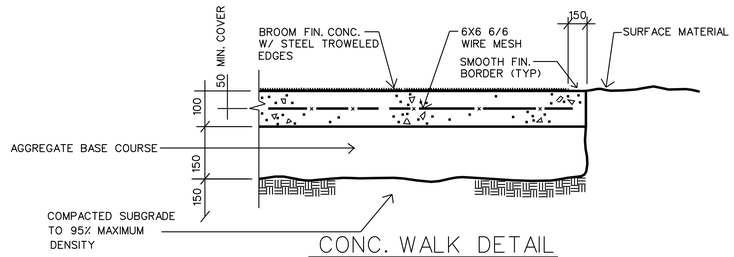


CONC. WALK DETAIL

N.T.S.

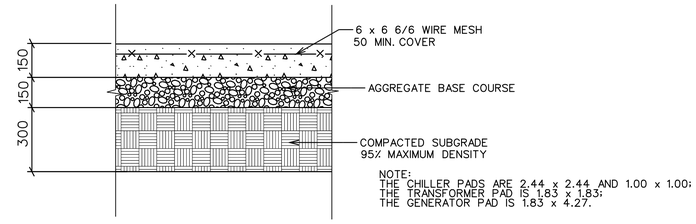


CONCRETE CHILLER/TRANSFORMER /GENERATOR PAD DETAIL

N.T.S.

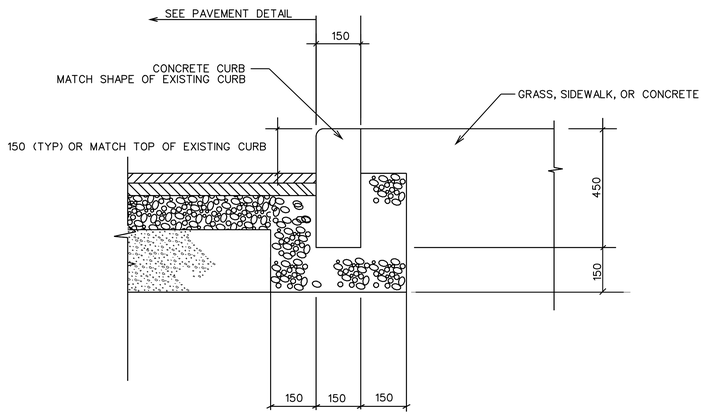


CURB DETAIL

N.T.S.

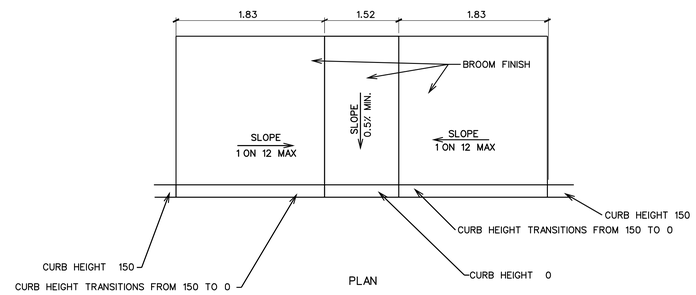


HANDICAPPED CURB RAMP ADJACENT TO SIDEWALK

NTS

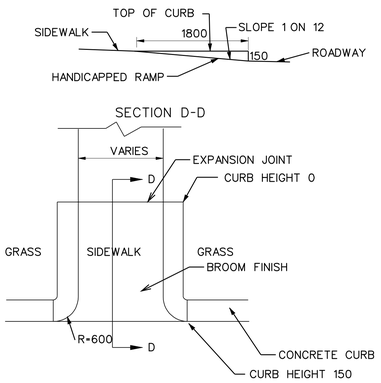


PLAN

NTS

HANDICAPPED RAMP IN SIDEWALK ADJACENT TO GRASS

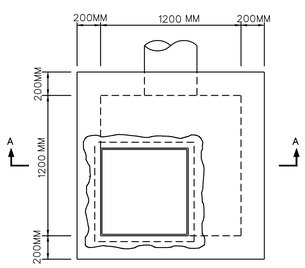


PLAN

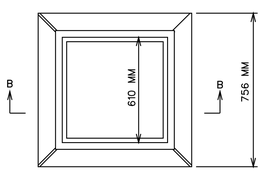


PLAN

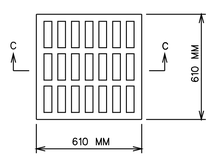


PLAN

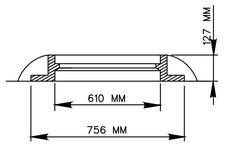


SECTON B-B

FRAME

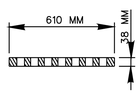


SECTION C-C

NOTES:

1. (OPEN AREA OF GRATE =0.195 SQ. METER)
2. FOR INLETS LOCATED ON A SLOPE, THE LONG DIMENSION OF THE GRATE OPENINGS SHALL BE PARALLEL TO THE SLOPE.

GRATE

TYPICAL FRAME AND GRATE STORM DRAIN INLET

NTS

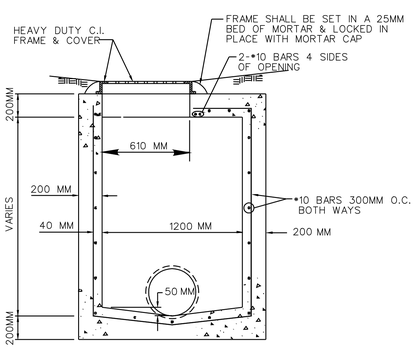


SECTION A-A

TYPICAL STORM DRAIN INLET

NTS

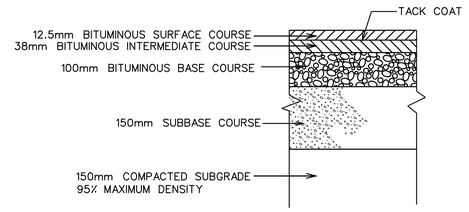


PAVEMENT DETAIL

N.T.S.

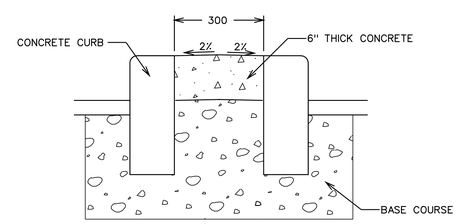


CONCRETE ISLAND

NTS

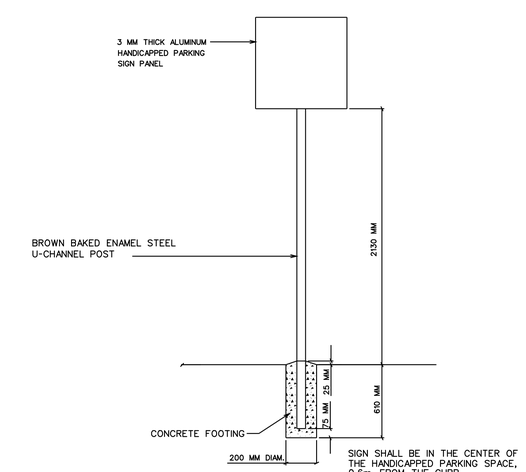


HANDICAPPED PARKING SIGN

NTS

NOTE: ALL DIMENSIONS SHOWN ARE IN MILLIMETERS.

US Army Corps of Engineers
New York District

| Rev. | Date | Description | Approved |
|---|---|---|---|

Designed by: | Date: | Size: | Rev.
Dwn by: | Ckd by: | Drawing file no.:
Reviewed by: | Drawing code:
Submitted by: | Plot date: 05-JAN-2005 16:23 | Plot by: | Scale: 864-6/8451-000000

U.S. ARMY ENGINEER DISTRICT CORPS OF ENGINEERS NEW YORK, NEW YORK

PN. 82234
MILITARY POLICE STATION
FORT HAMILTON, NY

SITE DETAILS 1

Sheet reference number:
C-006

Submitted by: e2endfeb
Software: microstation v8 for pc
Plot Date: 05-JAN-2005 16:23

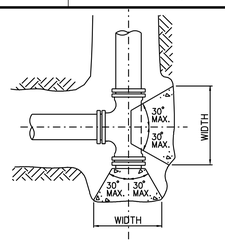


TYPICAL TEE & CAP

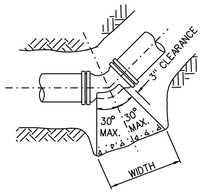


TYPICAL BEND

NOTE: BEARING AREAS ARE BASED ON 1.38 MPa TEST PRESSURE, A FACTOR OF SAFETY OF 1.5 AND SOIL RESISTANCE OF 96 kPa. IF WEAK (LESS THAN 96 kPa RESISTANCE) SOIL POCKETS ARE ENCOUNTERED, THE CONTRACTOR SHALL INCREASE THE BEARING AREAS SHOWN TO PREVENT MOVEMENT UNDER TEST OR OPERATING PRESSURES.

| PIPE FITTING | MINIMUM BEARING AREA (SQ. METERS) | | |
|---|---|---|---|
| | 100mm | 150mm | 200mm |
| PLUG | 0.175 | 0.394 | 0.700 |
| TEE | 0.175 | 0.394 | 0.700 |
| 90° BEND | 0.248 | 0.557 | 0.990 |
| 45° BEND | 0.134 | 0.302 | 0.569 |
| 22½° BEND | 0.069 | 0.153 | 0.273 |
| 11¼° BEND | 0.034 | 0.077 | 0.137 |

THRUST BLOCKS SHALL BE CLASS 2500 CONCRETE (MINIMUM)

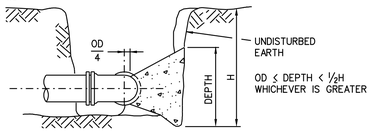


TYPICAL SECTION

THRUST BLOCKS

N.T.S.

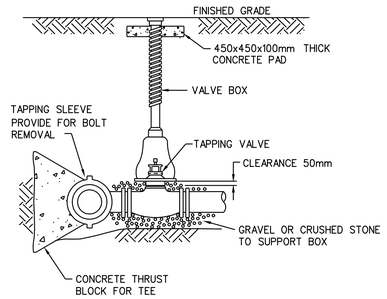


TAPPING VALVE AND BOX

N.T.S.

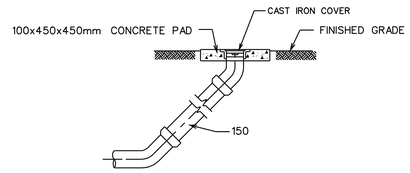


SANITARY CLEANOUT

N.T.S

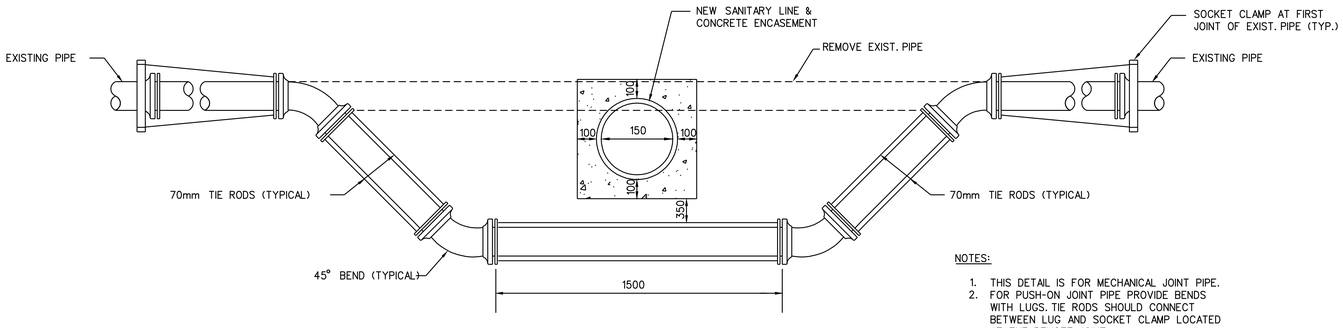


WATER MAIN RELOCATION

NTS

NOTES:

1. THIS DETAIL IS FOR MECHANICAL JOINT PIPE.
2. FOR PUSH-ON JOINT PIPE PROVIDE BENDS WITH LUGS. TIE RODS SHOULD CONNECT BETWEEN LUG AND SOCKET CLAMP LOCATED AT THE REMOTE JOINT.
3. CONCRETE PIPE ENCASEMENT SHALL BE 6m LONG.

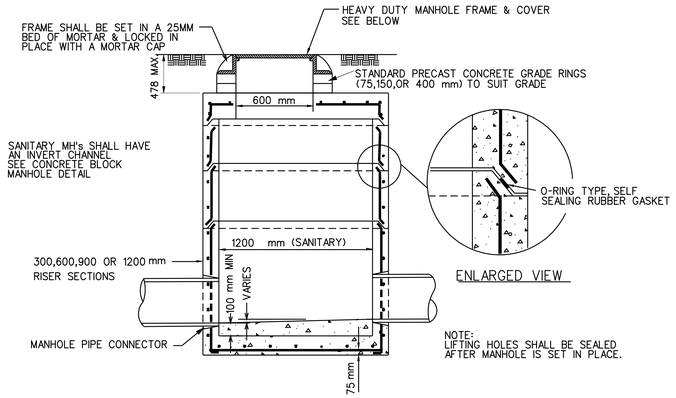


PRE-CAST CONCRETE SANITARY MANHOLE

NTS

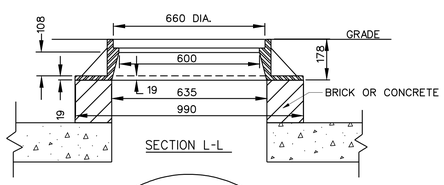


SECTION L-L

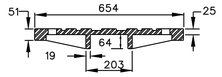


SECTION M-M

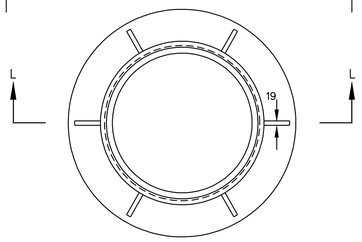


PLAN OF FRAME

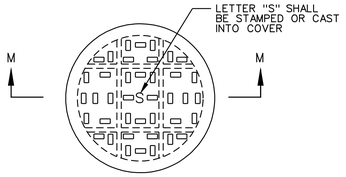


PLAN OF REMOVABLE COVER

SANITARY MANHOLE DETAILS

N.T.S.

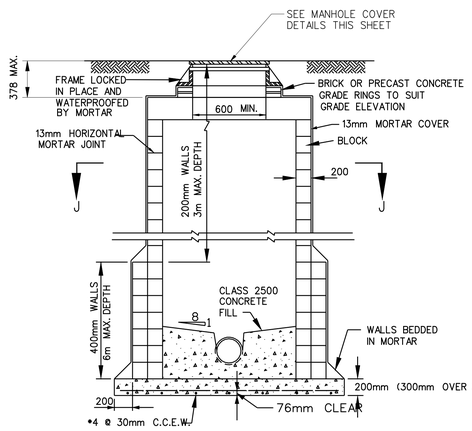


FRONT VIEW

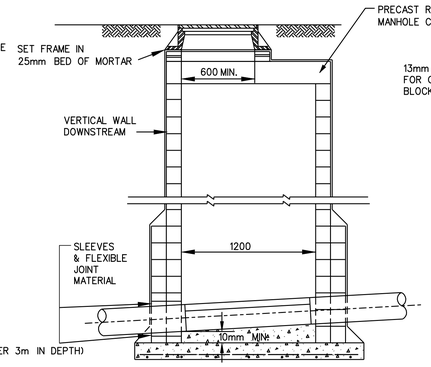


SIDE VIEW

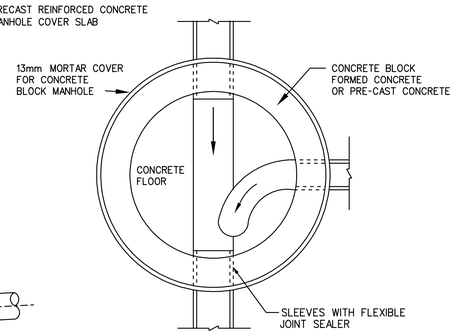


SECTION J-J

SECTIONAL ELEVATION OF CONCRETE BLOCK MANHOLE

N.T.S.

NOTES:
1. ALL DIMENSIONS ON THIS SHEET ARE IN MILLIMETERS UNLESS OTHERWISE INDICATED.
2. FOR UTILITY PLAN, SEE SHEET C-4.

NOTE: ALL DIMENSIONS SHOWN ARE IN MILLIMETERS.

US Army Corps of Engineers
New York District

| Symbol | Date | Description |
|---|---|---|

Designed by: | Date: | Size | Rev.
Dwn by: | Ckd by: | Drawing file no.:
Reviewed by: | Drawing code:
Submitted by: | Plot date: 05-JAN-2005 16:23 | Plot by: eJendheb | Scale: 1inch=1000000

U.S. ARMY ENGINEER DISTRICT CORPS OF ENGINEERS NEW YORK, NEW YORK

File name: S:\Division\military\Fort Hamilton\Office\Civil\MPL 13.dgn

PN: 18204
MILITARY POLICE STATION
FORT HAMILTON, NY

SITE DETAILS 2

Sheet reference number:
C-007

Submitted by: eJendheb
Plot Date: 05-JAN-2005 16:23
S:\Division\military\Fort Hamilton\Office\Civil\MPL 13.dgn

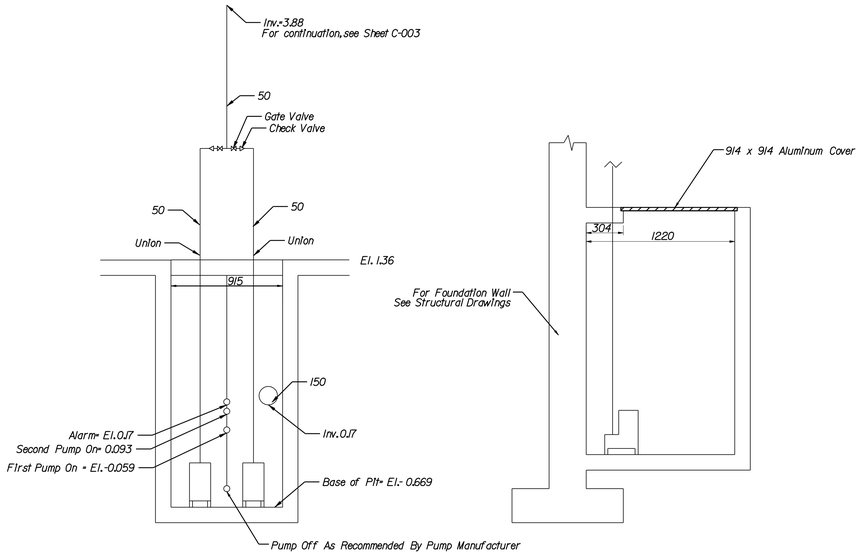


GROUND WATER PUMPS

NTS

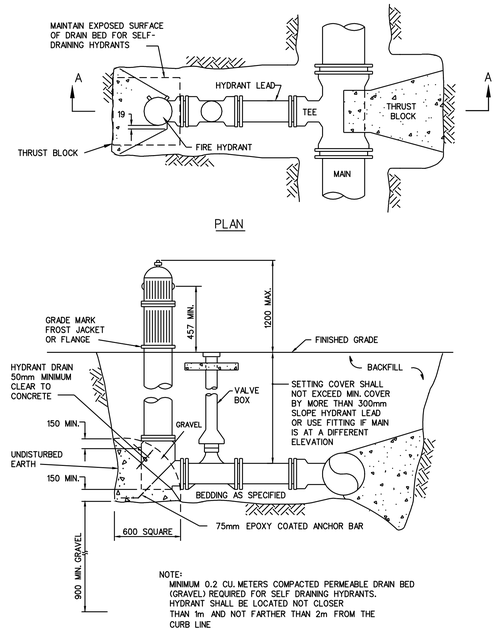


FIRE HYDRANT ASSEMBLY

N.T.S.

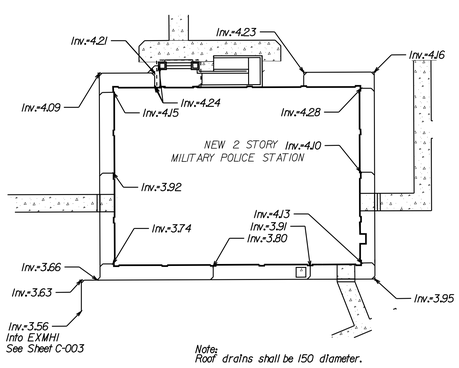


ROOF DRAINS

Scale: 1:250

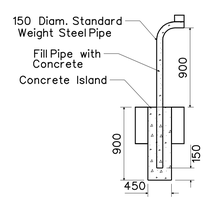


KEY CARD READER POST

NTS

NOTE: ALL DIMENSIONS SHOWN ARE IN MILLIMETERS.

US Army Corps of Engineers
New York District

| Symbol | Description | Date | APP |
|---|---|---|---|

U.S. ARMY ENGINEER DISTRICT
CORPS OF ENGINEERS
NEW YORK, NEW YORK

Designed by: | Date: | State | Rev.
Dwn by: | Ckd by: | Drawing file no.:
Reviewed by: | Drawing code:
Submitted by: | Plot date: 05-JAN-2005 16:23 | Plot by: | Scale: 9905.4/0003.100000

File name: S:\Division\Military\Contract\Hamilton\LA\MPA_1.dgn

PN: 52024
MILITARY POLICE STATION
FORT HAMILTON, NY

SITE DETAILS 3

Sheet reference number:
C–008

Submitted by: e3smith eb
Plot Date: 05-JAN-2005 16:23
Plot by: hamilton\MPS\dgn\C-008.dgn

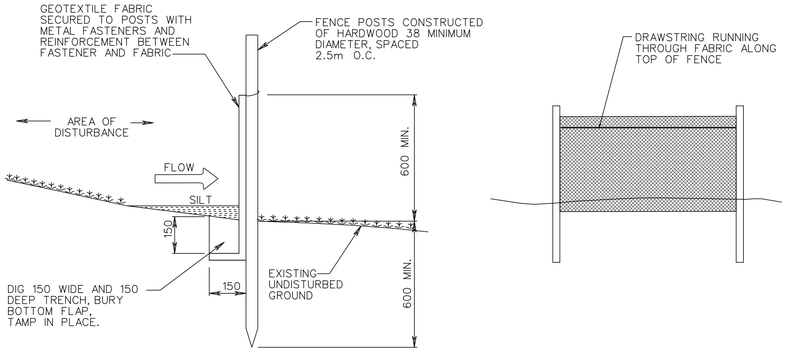


SILT FENCE NOTES:

1. SILT FENCE SHALL BE INSTALLED SO THAT RUNOFF FROM DISTURBED AREAS DO NOT BYPASS THE ENDS OF THE BARRIER.
2. THE GEOTEXTILE FABRIC SHALL BE RECOMMENDED BY THE MANUFACTURER FOR SUCH USE.
3. THE FABRIC SHALL BE SECURELY FASTENED TO THE POSTS USING A SYSTEM OF METAL FASTENERS (NAILS OR STAPLES) AND A HIGH STRENGTH REINFORCEMENT MATERIAL (NYLON WEBBING, GROMMETS, WASHERS ETC.) PLACED BETWEEN THE FASTENER AND THE GEOTEXTILE FABRIC. THE FASTENING SYSTEM SHALL RESIST TEARING AWAY FROM THE POST. THE FABRIC SHALL INCORPORATE A DRAWSTRING IN THE TOP PORTION OF THE FENCE FOR ADDED STRENGTH.
4. ENDS OF INDIVIDUAL ROLLS OF GEOTEXTILE FABRIC SHALL BE SECURELY FASTENED TO A COMMON POST IN SUCH A WAY THAT THERE IS NOT A GAP IN FILTERING ABILITY.
5. REFER TO EROSION CONTROL PLAN FOR LOCATION OF SILT FENCE.

## SILT FENCE CONSTRUCTION AND INSTALLATION DETAIL

N.T.S.

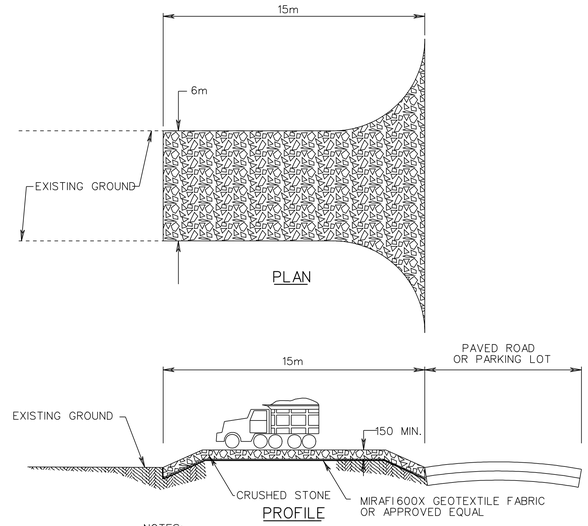


NOTES:

1. PROVIDE APPROPRIATE TRANSITION BETWEEN STABILIZED CONSTRUCTION ENTRANCE AND PUBLIC R.O.W.
2. CRUSHED STONE SHALL BE ASTM C-33, SIZE NO. 2 (38- 63) OR NO. 3 (25-50).
3. THE STABILIZED CONSTRUCTION DRIVEWAY SHALL BE MAINTAINED IN A CONDITION WHICH WILL PREVENT TRACKING OF SEDIMENT ONTO THE ADJACENT PAVEMENT.
4. GRADE THE SURROUNDING AREA TO DIVERT STORM WATER RUNOFF AWAY FROM THE STABILIZED CONSTRUCTION ENTRANCE.
5. A STABILIZED CONSTRUCTION ENTRANCE SHALL BE LOCATED AT EVERY POINT WHERE TRAFFIC ENTERS OR LEAVES THE CONSTRUCTION SITE. VEHICLES LEAVING THE SITE MUST TRAVEL OVER THE ENTIRE LENGTH OF THE STABILIZED CONSTRUCTION ENTRANCE.

## STABILIZED CONSTRUCTION ENTRANCE

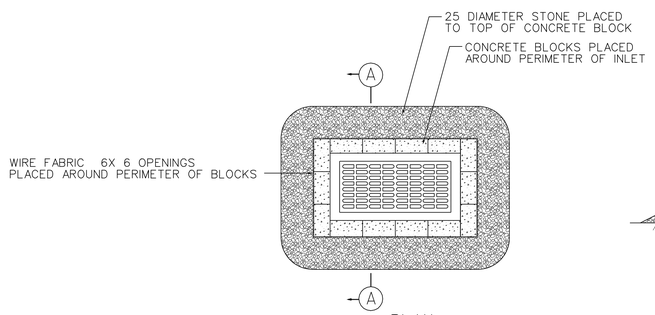


INLET PROTECTION NOTE:
PLACE INLET PROTECTION AT LOCATIONS SHOWN ON THE SOIL EROSION AND SEDIMENT CONTROL PLAN.

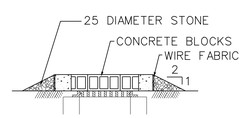


SECTION A-A

## INLET PROTECTION, CONCRETE BLOCK BARRIER

N.T.S.

NOTE:
ALL DIMENSIONS ON THIS SHEET ARE IN MILLIMETERS UNLESS OTHERWISE INDICATED.

NOTE: ALL DIMENSIONS SHOWN ARE IN MILLIMETERS.

US Army Corps of Engineers
New York District

| Symbol | Description | Date | Appr. |
|---|---|---|---|

U.S. ARMY ENGINEER DISTRICT
CORPS OF ENGINEERS
NEW YORK, NEW YORK

Designed by: | Date: | Rev.
Dwn by: | Ckd by: | Drawing file no.:
Reviewed by: | Drawing code:
Submitted by: | Plot date: 05-JAN-2006 16:23 | Plot by: wallsdg | Scale: 1hs4.320015.000000

File name: S:\Division\military\Fort Hamilton\Hall\MPS_TL.dgn

PN 62024
MILITARY POLICE STATION
FORT HAMILTON, NY

SOIL EROSION AND SEDIMENTATION CONTROL DETAILS

Sheet reference number:
C-009

Submitted by: eJensfeb
gerhardjensfeb@yahoo.com
Plot Date: 05-JAN-2005 16:23
wallsdg

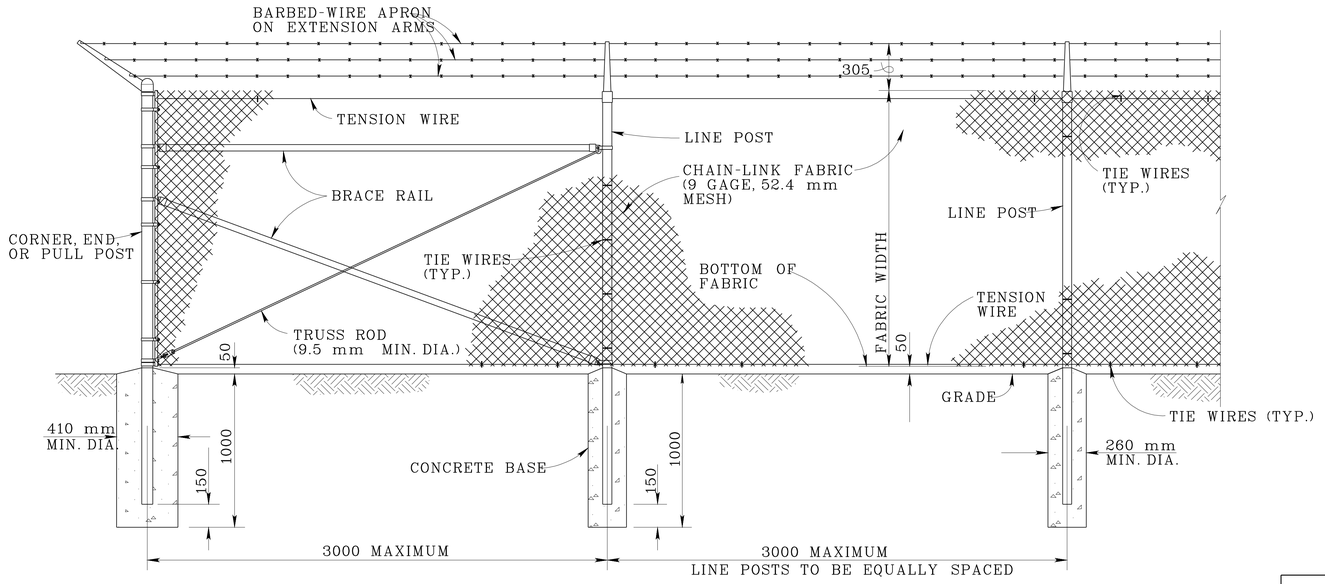


NOTE: SEE SITE PLAN, SHEET C-2 FOR LOCATION.

## CHAIN-LINK SECURITY FENCE DETAIL

NO SCALE

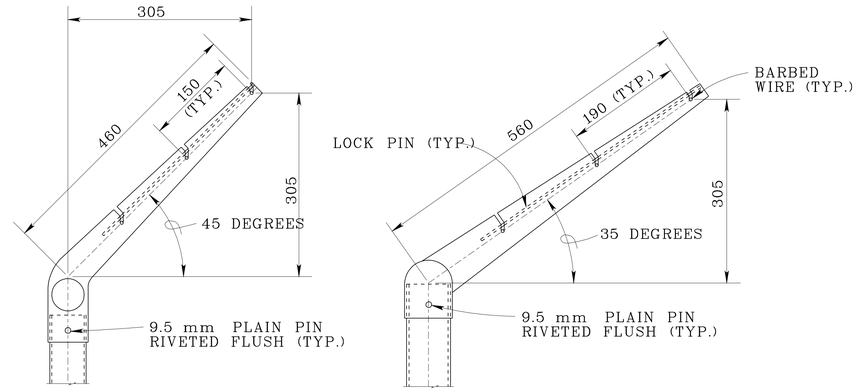


LINE POST

CORNER POST

## EXTENSION ARM DETAILS

NO SCALE

| STEEL POST SCHEDULE | |
|---|---|
| USE AND SECTION | MINIMUM OUTSIDE DIMENSIONS (NOMINAL) |
| | FABRIC 1830 mm |
| CORNER, END & PULL POSTS | |
| TUBULAR - ROUND | 73.0 mm O.D. |
| TUBULAR - SQUARE | 63.5 mm SQ. |
| C-SECTION (ROLL-FORMED) | 88.9 mm x 88.9 mm |
| LINE POSTS | |
| TUBULAR - ROUND | 60.3 mm O.D. |
| H-SECTION | 57.1 mm x 42.1 mm |
| C-SECTION (ROLL-FORMED) | 57.1 mm x 43.1 mm |
| TOP, BOTTOM & BRACE RAILS | |
| TUBULAR - ROUND | 42.3 mm O.D. |
| TUBULAR - SQUARE | 38.1 mm O.D. |
| H-SECTION | 41.2 mm x 38.1 mm |
| C-SECTION (ROLL-FORMED) | 41.2 mm x 31.7 mm |

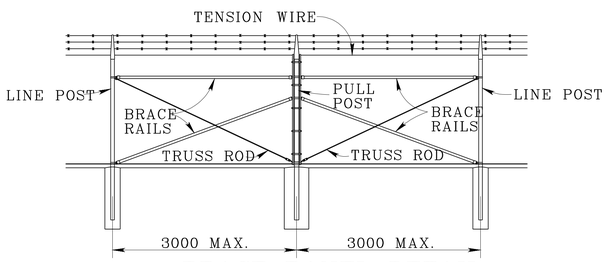


## BRACE PANEL DETAIL

NO SCALE

NOTE:
PROVIDE BRACE PANEL WHENEVER STRAIGHT RUNS EXCEED 152.4 m.

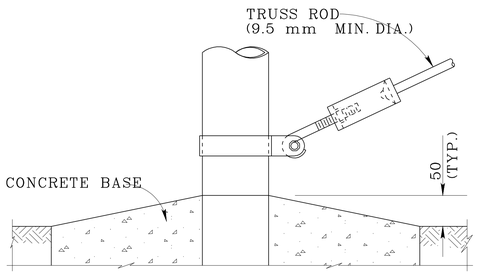


## TRUSS ROD AND BAND

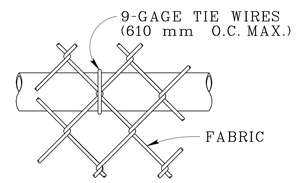


## TOP OR BRACE RAIL ATTACHMENT

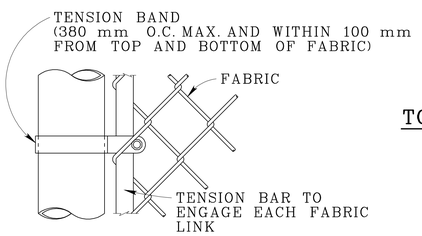


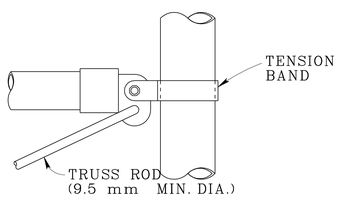


## ROUND POST

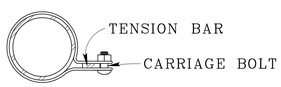


## END OR GATE POST DETAIL

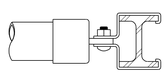

## H-BEAM

## BRACE RAIL CLAMP DETAILS

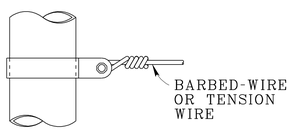


## TENSION BAND DETAIL

## FASTENING DETAILS

NO SCALE

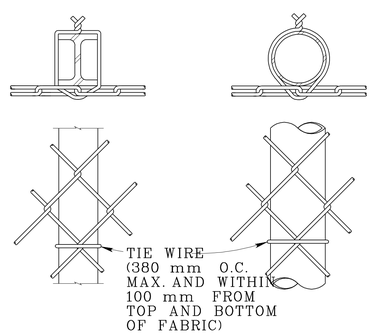


## H-BEAM ROUND POST

## LINE POST ATTACHMENTS

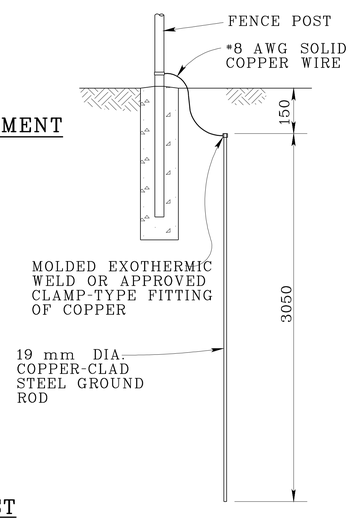


## GROUNDING DETAIL

NO SCALE

NOTES:

1. DETAILS SHOWN ARE TO CLARIFY REQUIREMENTS AND ARE NOT INTENDED TO LIMIT OTHER TYPES OF FENCE SECTIONS AND METHODS OF INSTALLATION.
2. WIRE TIES, RAILS, POSTS, AND BRACES SHALL BE CONSTRUCTED ON THE SECURE SIDE OF THE FENCE ALIGNMENT. CHAIN-LINK FABRIC SHALL BE PLACED ON THE OPPOSITE SIDE OF THE SECURE AREA.
3. C-SECTION POSTS SHALL BE INSTALLED SO THAT THE VOID INSIDE THE POST IS COMPLETELY FILLED WITH CONCRETE UP TO THE TOP OF THE FOUNDATION.
4. ALL DIMENSIONS ON THIS SHEET ARE IN MILLIMETERS UNLESS OTHERWISE INDICATED.

NOTE: ALL DIMENSIONS SHOWN ARE IN MILLIMETERS.

US Army Corps of Engineers
New York District

| Symbol | Description | Date | Appr. |
|---|---|---|---|

Designed by: | Date: | Size: | Rev:
Dwn by: | Ckd by: | Drawing file no.:
Reviewed by: | Drawing code:
Submitted by: | Plot date: 05-JAN-2005 16:24 | Plot by: s_dolenfwb | Scale: 0.000000000000
File name: S:\Mission\Military\Installation\MPBs\Old Fortress\fencedetail.dgn

U.S. ARMY ENGINEER DISTRICT
CORPS OF ENGINEERS
NEW YORK, NEW YORK

PN 82224
MILITARY POLICE STATION
FORT HAMILTON, NY

FENCE DETAILS 1

Sheet reference number:
C-010

Submitted by: wbendfwb
Plot Date: 05-JAN-2005 16:24
Plot by: s_dolenfwb
Saltfile: c:\pwworking\ny\d0241 hamilton\mp82224\c010\mp82224_fencedetail.dgn

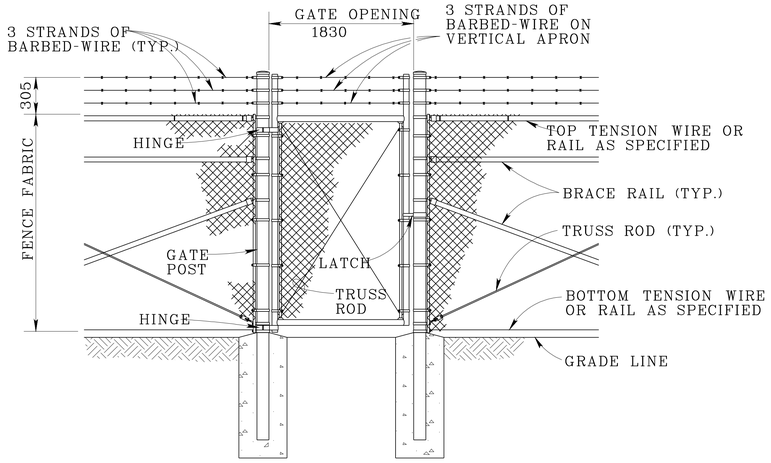


NOTE: SEE SITE PLAN, SHEET C-2, FOR LOCATION.

## PERSONNEL GATE TYPE FE-6 FENCE

| GATE POST SCHEDULE | |
|---|---|
| GATE LEAF WIDTH (NOMINAL) | OUTSIDE DIMENSION (NOMINAL) |
| 1830 mm OR LESS | 73.0 mm O.D.<br>63.5 mm SQ |

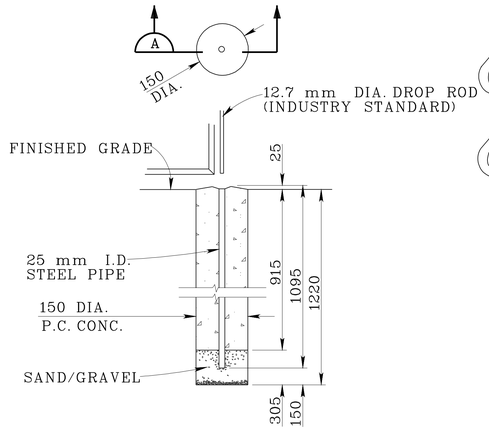


## DROP ROD FOUNDATION

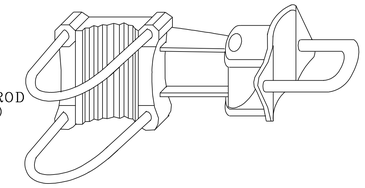

## OFFSET HINGE

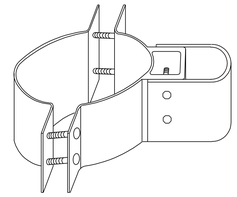

## STANDARD HINGE

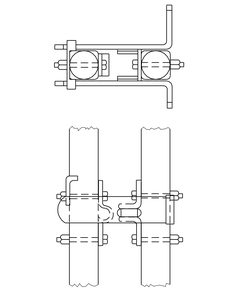

## LATCH ASSEMBLY

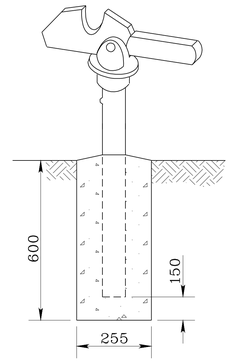


## GATE KEEPER
(TO HOLD GATE OPEN)

NOTES:
1. DETAILS SHOWN ARE TO CLARIFY REQUIREMENTS AND ARE NOT INTENDED TO LIMIT OTHER TYPES OF FENCE SECTIONS AND METHODS OF INSTALLATION.
2. SWING GATES SHALL BE CONSTRUCTED WITH DROP RODS, PADLOCKS, LATCH ASSEMBLY, AND GATE KEEPERS EXCEPT AS NOTED.
3. ALL GATE FRAMES SHALL BE A MINIMUM 48.2 mm NOMINAL (ROUND) OR 50.8 mm NOMINAL (SQUARE). GATE FRAMES SHALL BE OF WELDED CONSTRUCTION OR SHALL BE ASSEMBLED USING HEAVY FITTINGS. AT THE CONTRACTOR'S OPTION A WELDED HORIZONTAL BRACE MAY BE USED IN LIEU OF TRUSS RODS TO BRACE ALL WELDED GATE FRAMES. THE CONTRACTOR SHALL BE RESPONSIBLE FOR THE PROPER RIGID CONSTRUCTION OFF ALL GATES SUPPLIED.
4. ALL DIMENSIONS ARE IN MILLIMETERS UNLESS OTHERWISE INDICATED.

NOTE: ALL DIMENSIONS SHOWN ARE IN MILLIMETERS.

US Army Corps of Engineers
New York District

| Symbol | Description | Date | Appr. |
|---|---|---|---|

U.S. ARMY ENGINEER DISTRICT
CORPS OF ENGINEERS
NEW YORK, NEW YORK

Designed by: | Date: | Size: | Rev.:
Dwn by: | Ckd by: | Drawing file no.:
Reviewed by: | Drawing code:
Submitted by: | Plot date: 05-JUN-2005 16:24 | Plot by: edenvale | Scale: 0.2500000000000

File name: S:\Benson\military\fortHamilton\MPBg\DcFencing_gatewood.dgn

PN 52224
MILITARY POLICE STATION
FORT HAMILTON, NY

FENCE DETAILS 2

Sheet reference number:
C-011

Submitted by: e3endfab
Plot Date: 05-JUN-2005 16:24

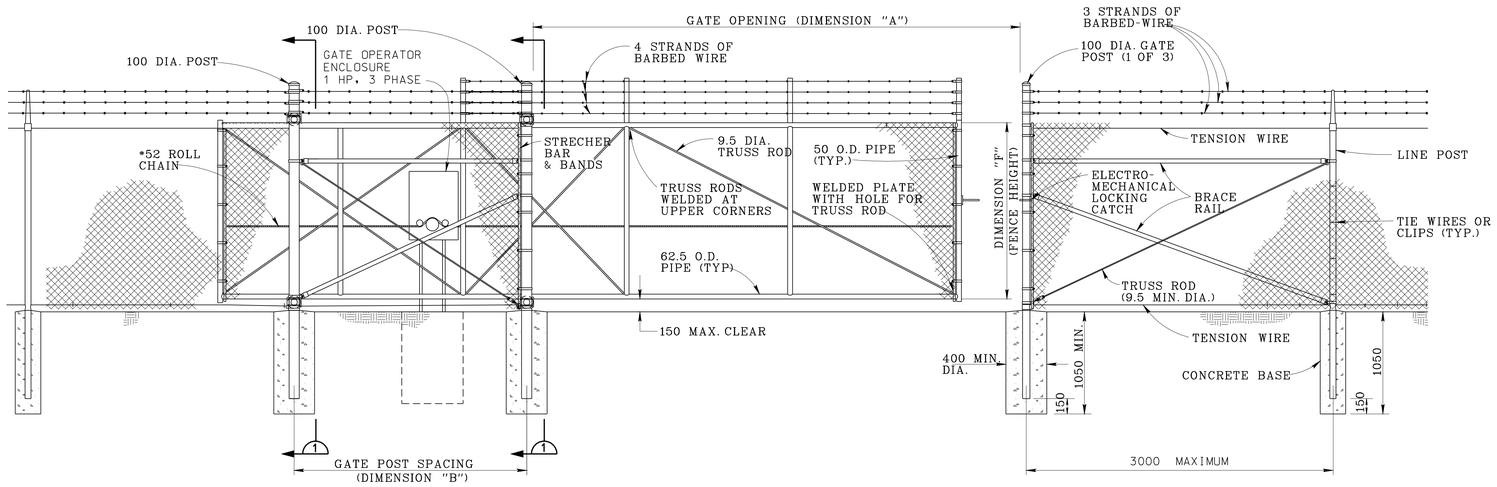


## ELEVATION
NO SCALE

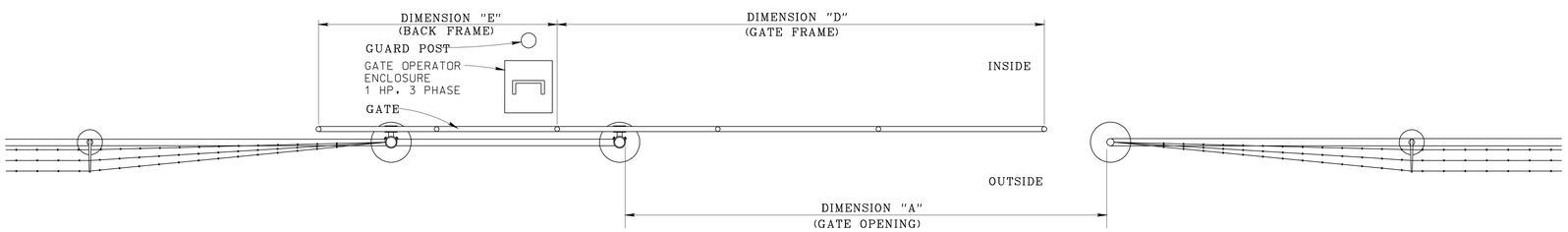


NOTE: SEE SITE PLAN, SHEET C-2, FOR LOCATION.

## PLAN
NO SCALE

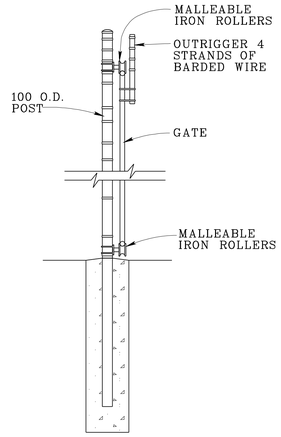


## SECTION 1
1

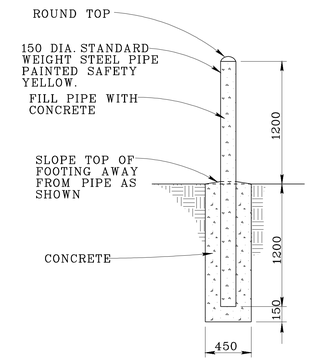


## PIPE GUARD DETAIL
NO SCALE

| SLIDE GATE SCHEDULE | | | | | |
|---|---|---|---|---|---|
| DIMENSION "A" (GATE OPENING) | DIMENSION "B" (GATE POST SPACING) | DIMENSION "C" (LINE POST SPACING) | DIMENSION "D" (GATE FRAME) | DIMENSION "E" (BACK FRAME) | DIMENSION "F" (FENCE HEIGHT) |
| 7.93m | 3.81m | 1.90m | 8.00m | 3.96m | 1.83m |

NOTES:
1. DETAILS SHOWN ARE TO CLARIFY REQUIREMENTS AND ARE NOT INTENDED TO LIMIT OTHER TYPES OF GATE SECTIONS AND METHODS OF INSTALLATION.
2. ALL DIMENSIONS ARE IN MILLIMETERS UNLESS OTHERWISE INDICATED.

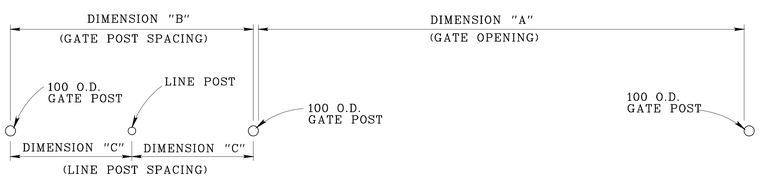


## GATE POST SETTINGS
NOTE: ALL DIMENSIONS SHOWN ARE IN MILLIMETERS.

NO SCALE

US Army Corps of Engineers
New York District

U.S. ARMY ENGINEER DISTRICT
CORPS OF ENGINEERS
NEW YORK, NEW YORK

Designed by: Date: Size: Rev.
Dwn by: Ckd by: Drawing file no.:
Reviewed by: Drawing code:
Submitted by: Pnt date: 05-JAN-2006 16:04
Pnt by: dbenfield
Scale: 1:20/50/100/500
File name: S:\Benson\military\fortHamilton\MPPs\DoFencing_upgrades\ms.dgn

PN 52224
MILITARY POLICE STATION
FORT HAMILTON, NY

# SLIDE GATE DETAILS

Sheet reference number:
C–012

Submitted by: e3wendlab Plot Dates: 05-JAN-2005 16:24
Settler:dgnsettings:default Hamilton:dgn$DGN$:tbc4:lWbsb6:s:\plots\default.cfg

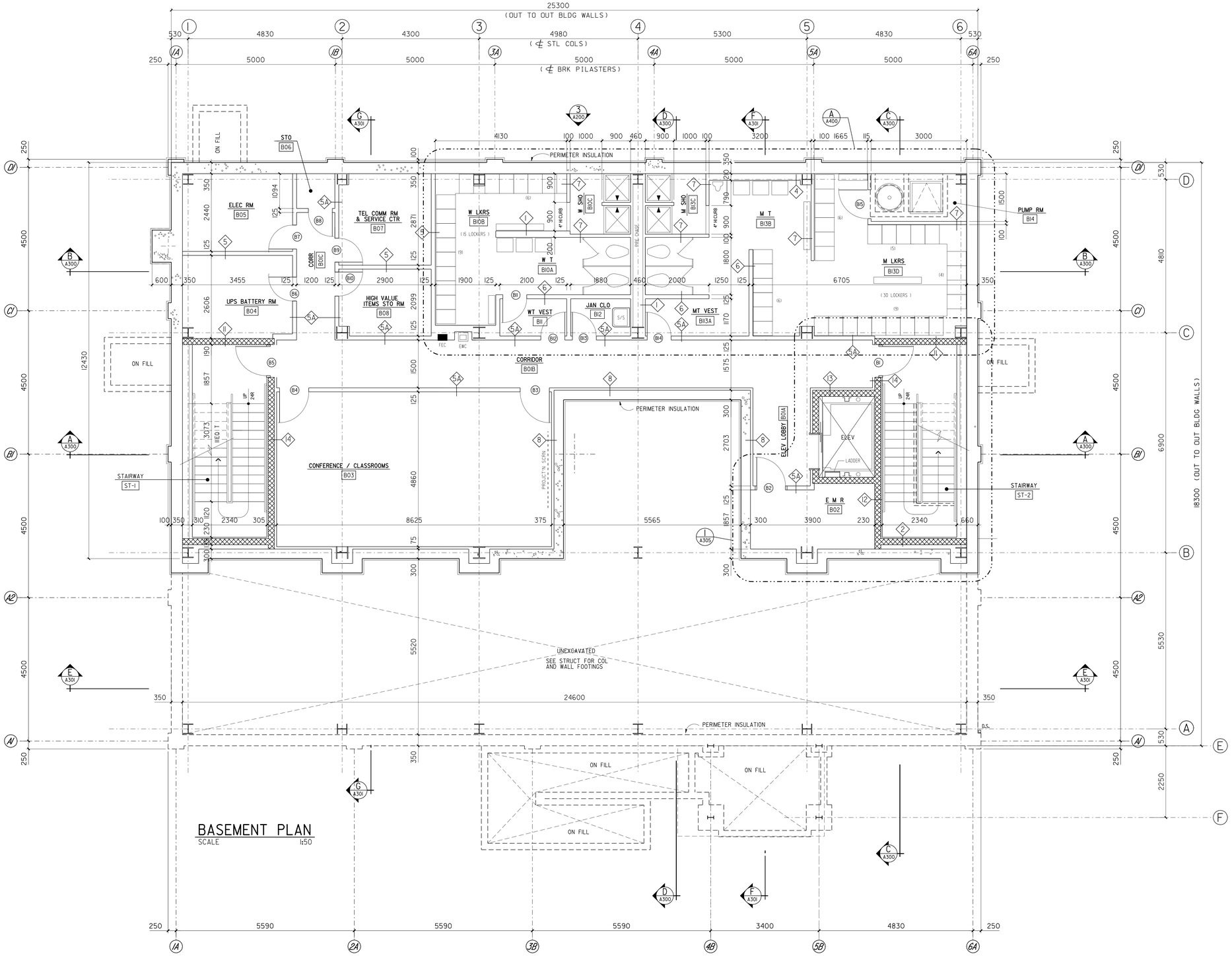


# BASEMENT PLAN

SCALE 1:50

GRAPHIC SCALE

1000mm 0 1M 2M 3M 4M 5M

SCALE 1:50

NOTE: ALL DIMENSIONS SHOWN ARE IN MILLIMETERS.

TRUE NORTH

PROJECT NORTH

US Army Corps of Engineers
New York District

| Symbol | Description | Date | Appr. |
|---|---|---|---|

| | |
|---|---|
| Designed by: | Date: |
| Dwn by: | Ckd by: |
| Reviewed by: | Drawing code: |
| Submitted by: | Drawing file no.: |
| File name: S:\Benson\military\fortHamilton\MPBy\architecture\FortHa_A-100.dgn | Plot date: 05-JAN-2006 16:04 Plot for: Admin Scale: 50.000000000000 |

Size | Rev.

U.S. ARMY ENGINEER DISTRICT
CORPS OF ENGINEERS
NEW YORK, NEW YORK

PN 52224
MILITARY POLICE STATION
FORT HAMILTON, NY

BASEMENT PLAN

Sheet reference number:
A-100

Submitted by: e3endfab
Plot Date: 05-JAN-2005 16:24
Setfiles: admin1.dgn hamilton.dgn MPBy\architecture\MPBy_A-100.dgn

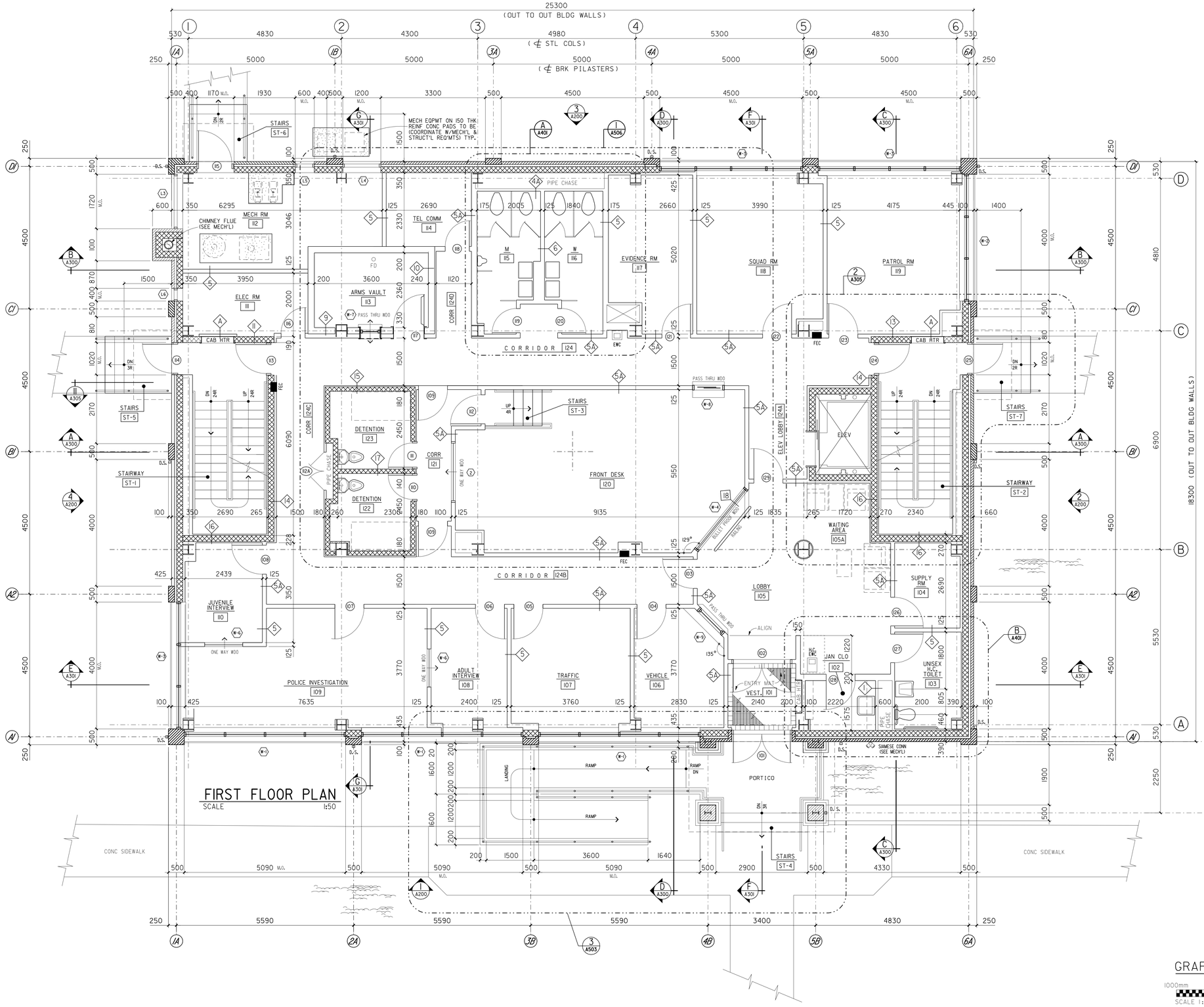


# FIRST FLOOR PLAN

SCALE 1:50

GRAPHIC SCALE

1000mm 0 1M 2M 3M 4M 5M

SCALE 1:50

NOTE: ALL DIMENSIONS SHOWN ARE IN MILLIMETERS.

TRUE NORTH

PROJECT NORTH

US Army Corps of Engineers
New York District

| Symbol | Description | Date | Appr. |
|---|---|---|---|

Designed by:
Dwn by:
Ckd by:
Reviewed by:
Submitted by:
Date:
Drawing file no.:
Drawing code:
Plot date: 05-JAN-2009 16:24
Plot by: e0dmcfwb
Size: Rev:
File name: S:\Mission\Military\Fort Hamilton\MPS\Architecture\MPS\a_A-101.dgn

U.S. ARMY ENGINEER DISTRICT
CORPS OF ENGINEERS
NEW YORK, NEW YORK

PN 82224
MILITARY POLICE STATION
FORT HAMILTON, NY

FIRST FLOOR PLAN

Sheet reference number:
A–101

Submitted by: e3endfwb
S:\Mission\Military\Fort Hamilton\MPS\Architecture\MPS\a_A-101.dgn
Plot Date: 05-JAN-2009 16:24

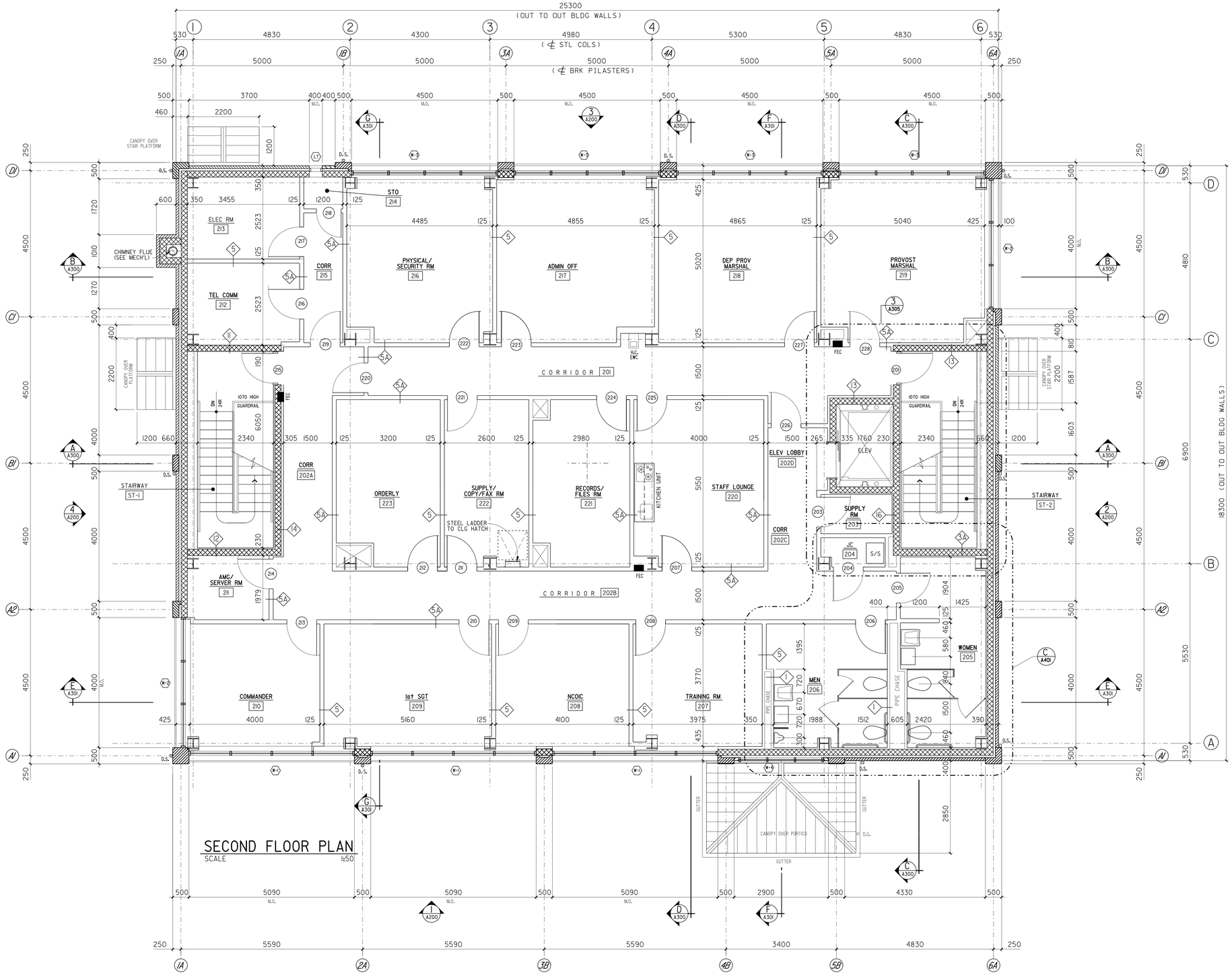


## SECOND FLOOR PLAN

SCALE 1:50

GRAPHIC SCALE

1000mm 0 1M 2M 3M 4M 5M

SCALE 1:50

NOTE: ALL DIMENSIONS SHOWN ARE IN MILLIMETERS.

TRUE NORTH

PROJECT NORTH

US Army Corps of Engineers
New York District

| Symbol | Description | Date | Appr. |
|---|---|---|---|

| Size | Rev. |
|---|---|
| Date: | |
| Drawing file no.: | |
| Drawing code: | |
| Pm date: 05-JAN-2005 16:24 | |
| Pm by: e. dondero | |
| Sym: 6/00000/00000 | |
| Designed by: | |
| Dwn by: | Ckd by: |
| Reviewed by: | |
| Submitted by: | |

U.S. ARMY ENGINEER DISTRICT
CORPS OF ENGINEERS
NEW YORK, NEW YORK

File name: S:\Division\military\Fort Hamilton\MPS\Architectural\MPS_A-102.dgn

PN 82224
MILITARY POLICE STATION
FORT HAMILTON, NY

# SECOND FLOOR PLAN

Sheet reference number:
A-102

Submitted by: e3endfwb
S:\Fldr\Projectfldr\Fort Hamilton\MPS\Sub-Architecture\MPS_A-102.dgn
Plot Date: 05-JAN-2005 16:24

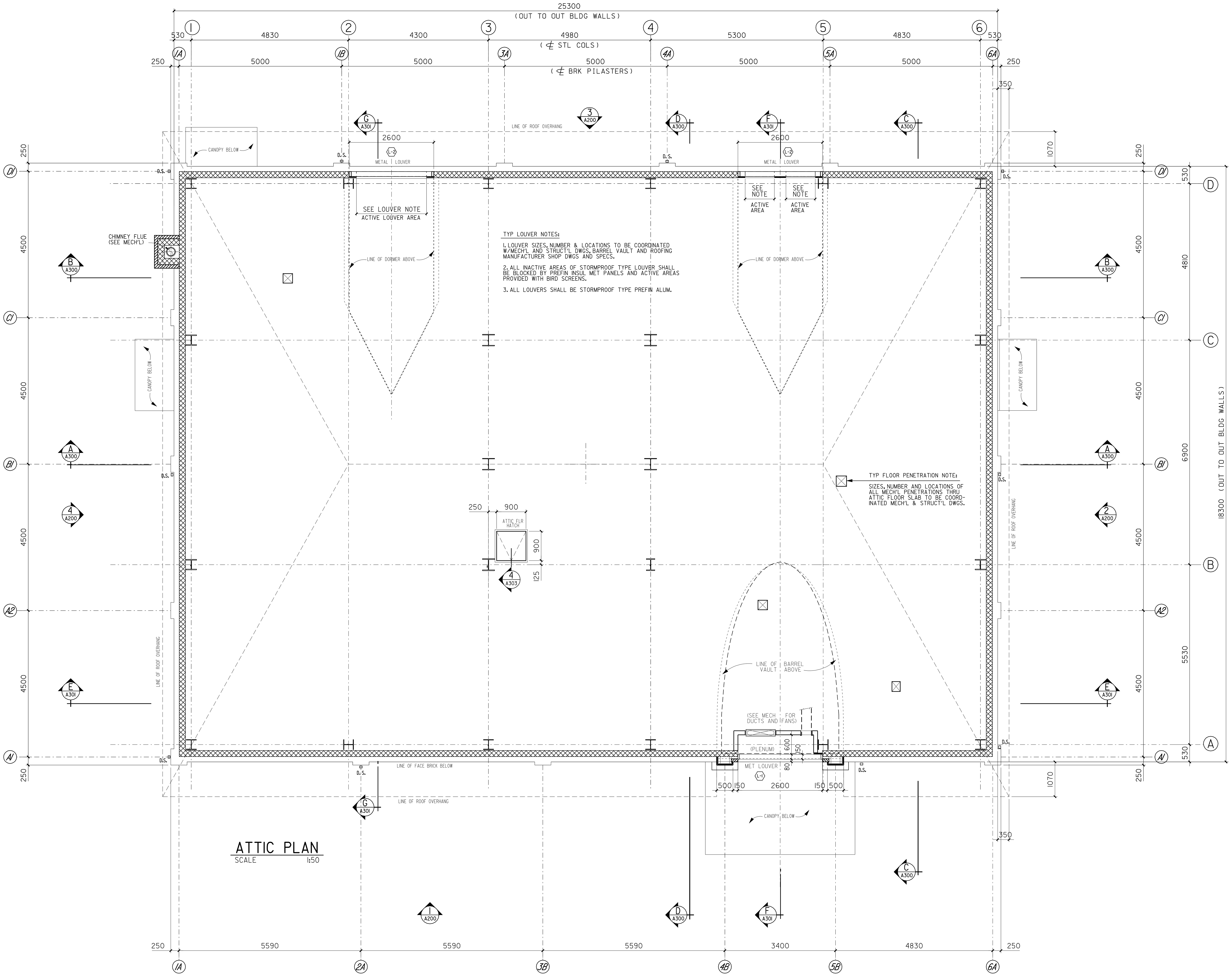


ATTIC PLAN
SCALE 1:50

GRAPHIC SCALE
1000mm 0 1M 2M 3M 4M 5M
SCALE 1:50

NOTE: ALL DIMENSIONS SHOWN ARE IN MILLIMETERS.

PROJECT NORTH
TRUE NORTH

US Army Corps of Engineers
New York District

U.S. ARMY ENGINEER DISTRICT
CORPS OF ENGINEERS
NEW YORK, NEW YORK

Designed by: | Dwn by: | Ckd by: | Reviewed by: | Submitted by:
Date: | Size: | Rev.:
Drawing file no.:
Drawing code:
Plot date: 05–JAN–2005 16:24
Plot by: e3endfwb
Scale: 50.000000:1.000000
File name: S:\fileroom\military\Fort Hamilton\MPSta\Architectural\MPSta A–103.dgn

PN 52224
MILITARY POLICE STATION
FORT HAMILTON, NY

ATTIC PLAN

Sheet reference number:
A–103

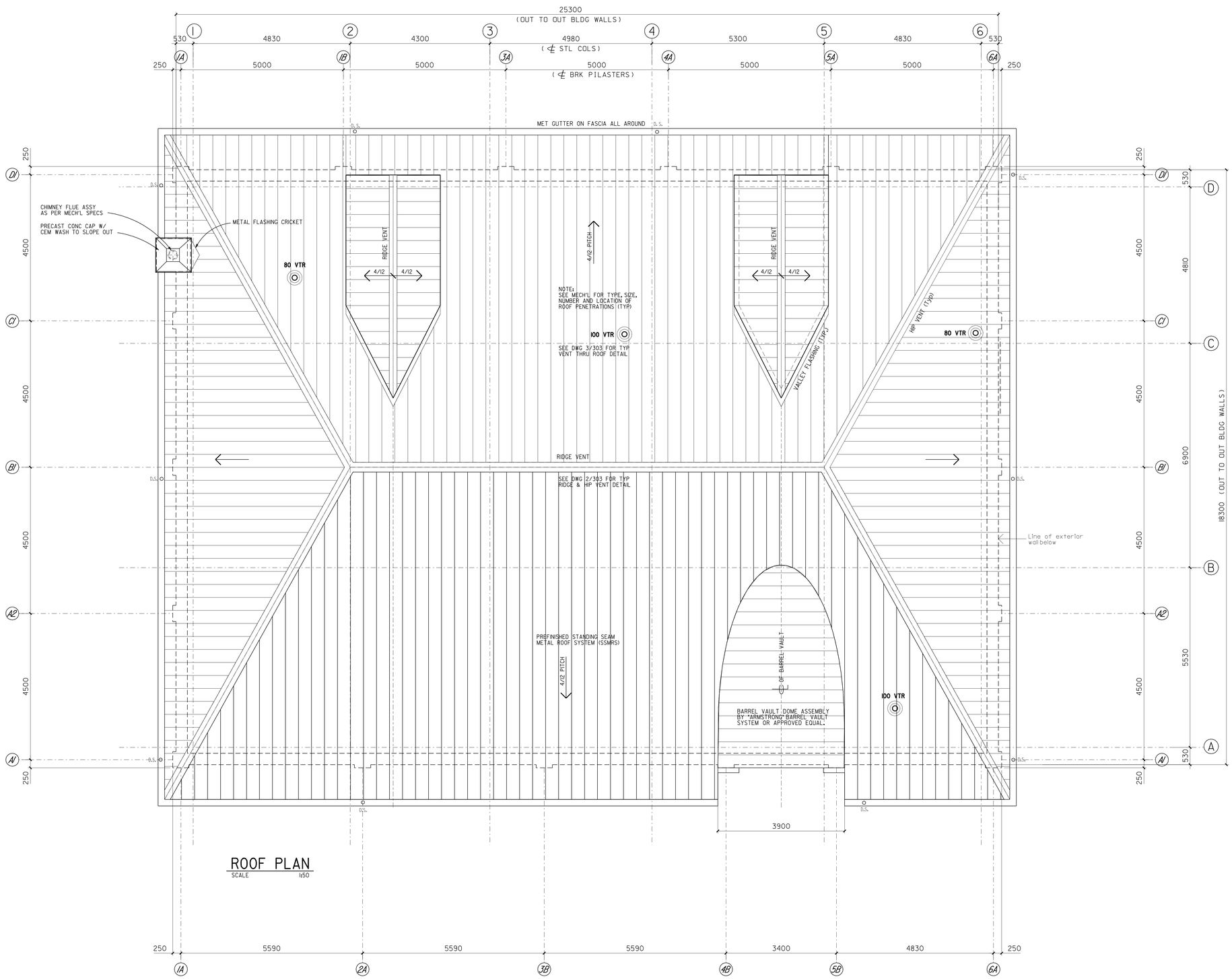


## ROOF PLAN

SCALE 1:50

## GRAPHIC SCALE

1000mm 0 1M 2M 3M 4M 5M

SCALE 1:50

NOTE: ALL DIMENSIONS SHOWN ARE IN MILLIMETERS.

US Army Corps of Engineers
New York District

| Symbol | Description | Date | Appr. |
|---|---|---|---|

U.S. ARMY ENGINEER DISTRICT
CORPS OF ENGINEERS
NEW YORK, NEW YORK

Designed by: | Date: | Size: | Rev.:
Dwn by: | Ckd by: | Drawing file no.:
Reviewed by: | Drawing code:
Submitted by: | Plot date: 09-JAN-2006 16:24 | Plot by: e.davidson | Scale: 1:50/0000/0.00000
File name: S:\Missions\Military\Fort Hamilton\MPSs\Architectural\MPSs A-104.dgn

PN 52224
MILITARY POLICE STATION
FORT HAMILTON, NY

# ROOF PLAN

Sheet reference number:

A–104

Submitted by: e3endfeb
pw:files-dcwmilitary:pw01 hamiltonmp01:52224\architectural\MPSs A-104.dgn Plot Date: 09-JAN-2006 16:24

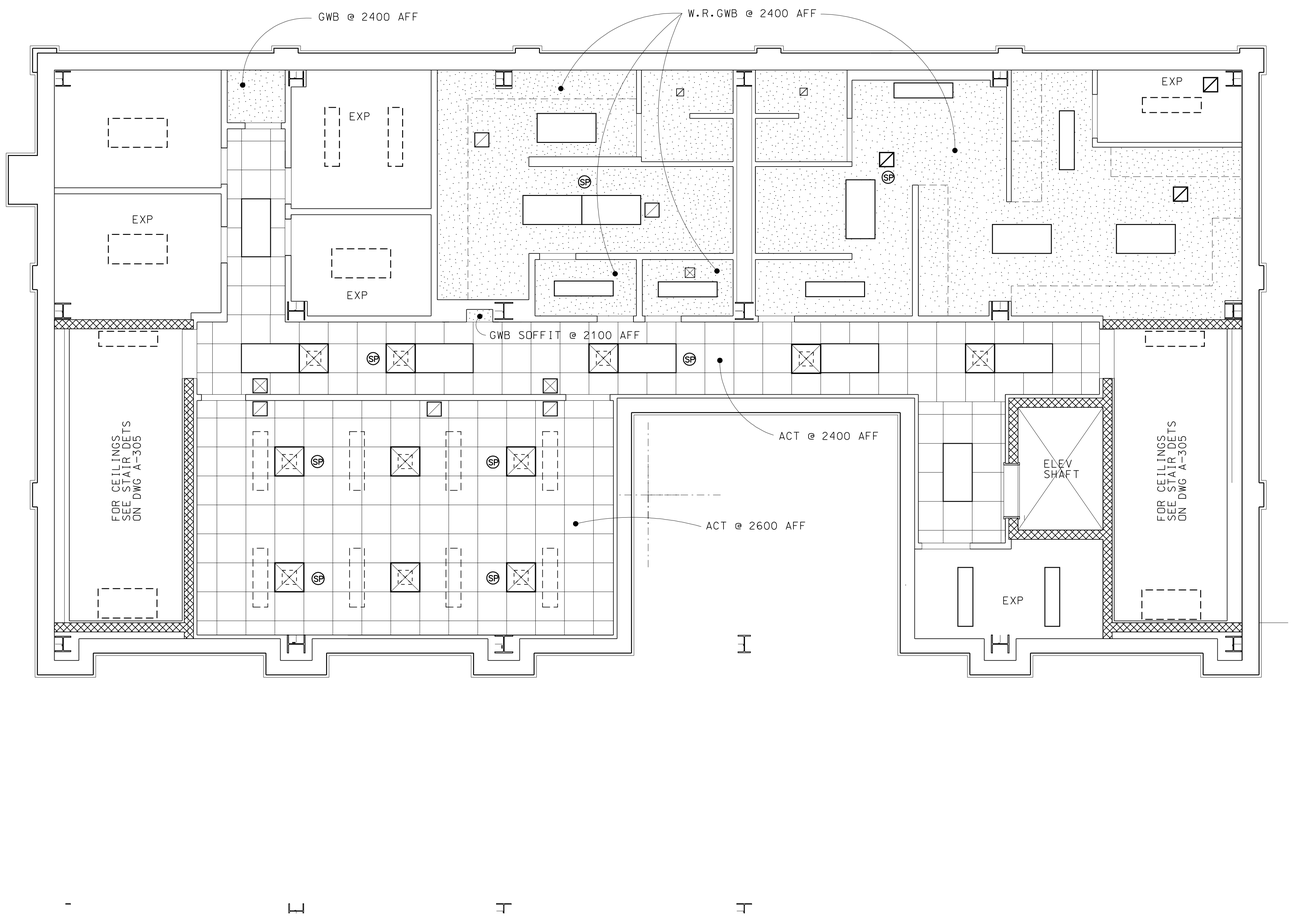


## LEGEND

- CEILING ACCESS PANEL
- 600 X 1200 RECESSED FLUORESCENT FIXTURE
- 300 X 1200 RECESSED FLUOR. FIXT.
- PENDANT TYPE OR SURFACE MOUNTED FLUOR. FIXT.
- RECESSED DOWNLIGHT FIXTURE
- EXIT LIGHT & SIGN
- 300 X 300 SUPPLY AIR CEILING DIFFUSER
- 600 X 600 SUPPLY AIR CEILING DIFFUSER
- 300 X 300 RETURN AIR CEILING DIFFUSER
- 600 X 600 RETURN AIR CEILING GRILLE
- HVAC LINEAR SLOT DIFFUSER
- SURFACE MOUNTED EXTERIOR LIGHT FIXTURE
- SMOKE DETECTOR
- HEAT DETECTOR
- SP CEILING MOUNTED SPEAKER
- C CEILING MOUNTED CLOSE CIRCUIT CAMERA

CEILINGS TYPES:

A. 600x600 PARTIALLY CONCEALED GRID ACT. CLG. @ 2400 AFF (TYP.) U.O.N.

B. LOBBY:600x600 PARTIALLY CONCEALED GRID ACT. CLG. @ 2700: AFF

C. TOILETS & JAN. CLOSET: W.P.GWB @ 2400 AFF (TYP.) U.O.N.

D. STORAGE & OTHER CLOSETS SOFFIT: GWB @ 2400 AFF

E. EWC SOFFIT: GWB @ 2100 AFF.

F. EXTERIOR SOFFIT: PERFORATED ALUM. PANELS PREFIN. WHITE @ 2700 AFF.

EXP EXPOSED CONSTRUCTION

## NOTES:

1. COORDINATE ALL ARCHITECTURAL DRAWINGS WITH ELECTRICAL AND MECHANICAL DRAWINGS.

2. FOR FURTHER INFORMATION, REFER TO ELECTRICAL AND MECHANICAL DRAWINGS.

3. SURFACE MOUNTED, PENDANT, WALL MOUNTED LIGHT FIXTURES MAY NOT BE SHOWN IN THESE DRAWINGS, WITH A FEW EXCEPTIONS.

4. VERIFY EXACT LOCATION OF CLG. ACCESS PANELS.

## GRAPHIC SCALE

1000mm 0 1M 2M 3M 4M 5M

SCALE 1:100

NOTE: ALL DIMENSIONS SHOWN ARE IN MILLIMETERS.

TRUE NORTH

PROJECT NORTH

US Army Corps of Engineers
New York District

| Symbol | Description | Date | Appr. |
|---|---|---|---|

U.S. ARMY ENGINEER DISTRICT
CORPS OF ENGINEERS
NEW YORK, NEW YORK

Designed by: | Date: | Size: | Rev.:
Dwn by: | Ckd by: | Drawing file no.:
Reviewed by: | Drawing code:
Submitted by: | Plot date: 05-JAN-2009 16:24 | Plot by: ADMINHO | Scale: SG-A100-sgn
File name: S:\Missions\Military\Fort Hamilton\MPS\Architecture\MPS\a_A100.dgn

PN 52224
MILITARY POLICE STATION
FORT HAMILTON, NY

# BASEMENT REFLECTED CEILING PLAN

Sheet reference number:

A–105

Submitted by: eblendwo
Software:microstation jf v8.11.07.17 hamilton:MPS:cadarchitecture:MPS:a_A100.dgn
Plot Date: 05-JAN-2009 16:24

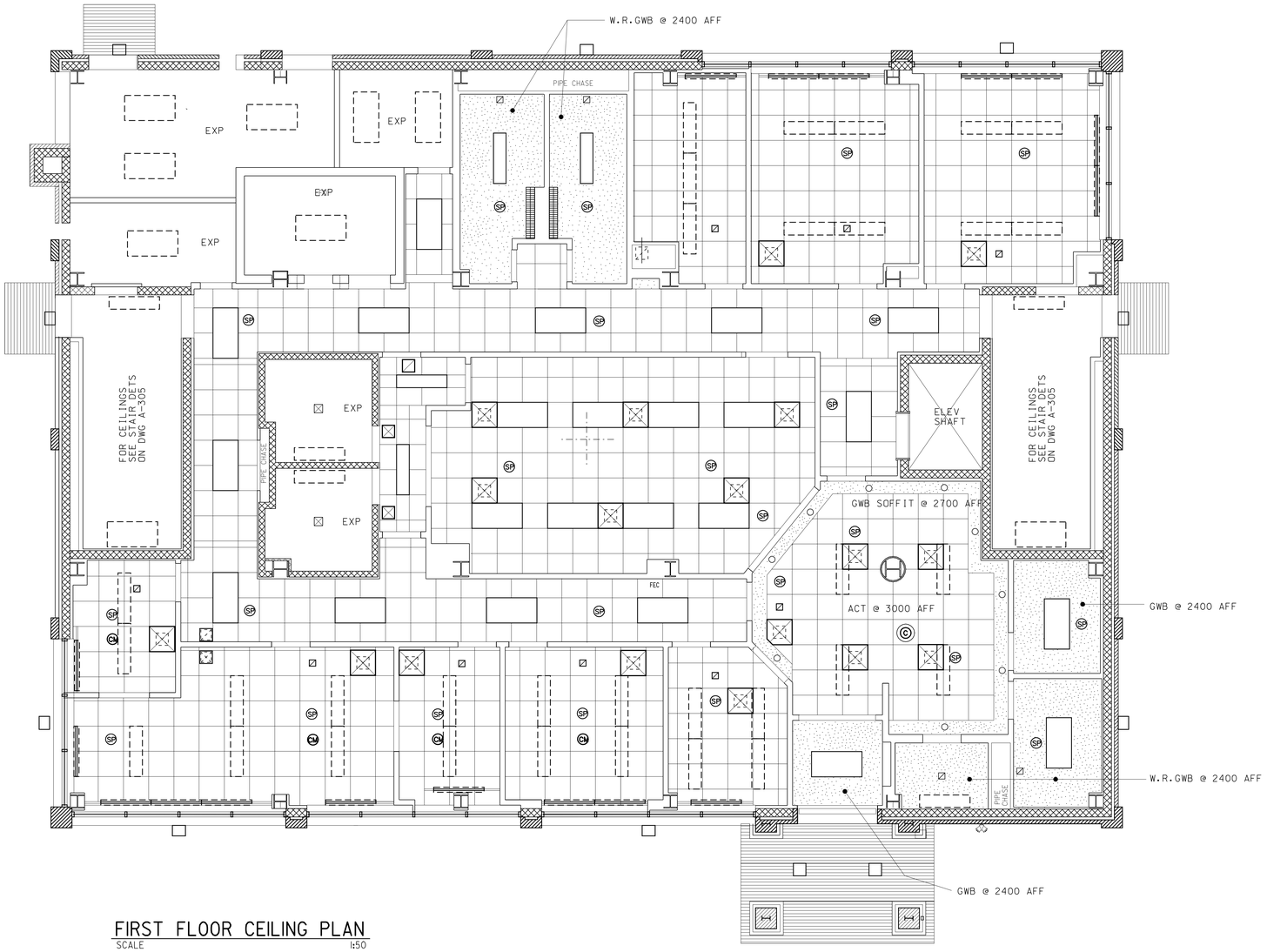


## FIRST FLOOR CEILING PLAN

SCALE 1:50

## LEGEND

- CEILING ACCESS PANEL
- 600 X 1200 RECESSED FLUORESCENT FIXTURE
- 300 X 1200 RECESSED FLUOR. FIXT.
- PENDANT TYPE OR SURFACE MOUNTED FLUOR. FIXT.
- RECESSED DOWNLIGHT FIXTURE
- EXIT LIGHT & SIGN
- SUPPLY AIR CEILING DIFFUSER
- SUPPLY AIR CEILING DIFFUSER
- RETURN AIR CEILING DIFFUSER
- RETURN AIR CEILING GRILLE
- HVAC LINEAR SLOT DIFFUSER
- SURFACE MOUNTED EXTERIOR LIGHT FIXTURE
- SMOKE DETECTOR
- HEAT DETECTOR
- SP CEILING MOUNTED SPEAKER
- C CEILING MOUNTED CLOSE CIRCUIT CAMERA
- CM CEILING MOUNTED MICROPHONE

CEILINGS TYPES:

A. 600x600 PARTIALLY CONCEALED GRID ACT. CLG. @ 2400 AFF (TYP.) U.O.N.

B. LOBBY:600x600 PARTIALLY CONCEALED GRID ACT. CLG. @ 2700: AFF

C. TOILETS & JAN. CLOSET: W.P.GWB @ 2400 AFF (TYP.) U.O.N.

D. STORAGE & OTHER CLOSETS SOFFIT: GWB @ 2400 AFF

E. EWC SOFFIT: GWB @ 2100 AFF.

F. EXTERIOR SOFFIT: PERFORATED ALUM. PANELS PREFIN. WHITE @ 2700 AFF.

EXP EXPOSED CONSTRUCTION

## NOTES:

1. COORDINATE ALL ARCHITECTURAL DRAWINGS WITH ELECTRICAL AND MECHANICAL DRAWINGS.

2. FOR FURTHER INFORMATION, REFER TO ELECTRICAL AND MECHANICAL DRAWINGS.

3. SURFACE MOUNTED, PENDANT, WALL MOUNTED FIXTURES MAY NOT BE SHOWN IN THESE DRAWINGS, WITH A FEW EXCEPTIONS.

4. VERIFY EXACT LOCATION OF CLG. ACCESS PANELS.

GRAPHIC SCALE

1000mm 0 1M 2M 3M 4M 5M

SCALE 1:100

NOTE: ALL DIMENSIONS SHOWN ARE IN MILLIMETERS.

TRUE NORTH PROJECT NORTH

US Army Corps of Engineers New York District

| Symbol | Description | Date | Appr. |
|---|---|---|---|

Designed by: | Date: | Size: | Rev:
Dwn by: | Ckd by: | Drawing file no.:
Reviewed by: | Drawing code:
Submitted by: | Plot date: 05-JAN-2009 16:24 | Plot by: ADAMSHO | Date: 00-00000000000
File name: S:\Division\military\Fort Hamilton\MPS\Architecture\MPS_A-106.dgn

U.S. ARMY ENGINEER DISTRICT
CORPS OF ENGINEERS
NEW YORK, NEW YORK

PN 52224
MILITARY POLICE STATION
FORT HAMILTON, NY

# FIRST FLOOR REFLECTED CEILING PLAN

Sheet reference number: A-106

Submitted by: eXtendTwo
Plot Date: 05-JAN-2009 16:24
S:\Office-Guardhouse\Fort Hamilton\Drawings\Architecture\MPS_A-106.dgn

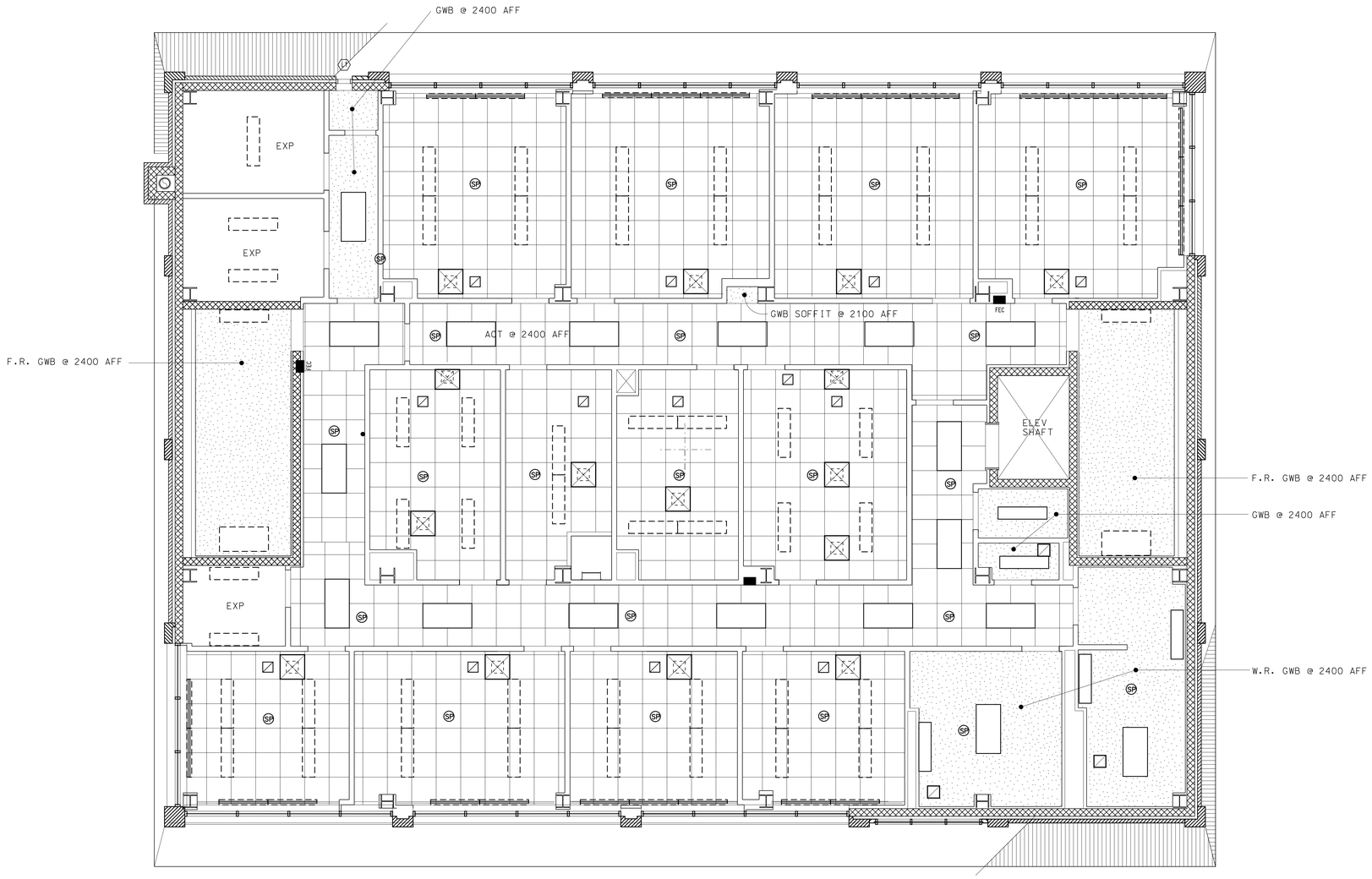


## 2nd Flr CEILING PLAN

SCALE 1:50

## LEGEND

- CEILING ACCESS PANEL
- 600 X 1200 RECESSED FLUORESCENT FIXTURE
- 300 X 1200 RECESSED FLUOR. FIXT.
- PENDANT TYPE OR SURFACE MOUNTED FLUOR. FIXT.
- RECESSED DOWNLIGHT FIXTURE
- EXIT LIGHT & SIGN
- SUPPLY AIR CEILING DIFFUSER
- SUPPLY AIR CEILING DIFFUSER
- RETURN AIR CEILING DIFFUSER
- RETURN AIR CEILING GRILLE
- HVAC LINEAR SLOT DIFFUSER
- SURFACE MOUNTED EXTERIOR LIGHT FIXTURE
- SMOKE DETECTOR
- HEAT DETECTOR
- SP CEILING MOUNTED SPEAKER
- C CEILING MOUNTED CLOSE CIRCUIT CAMERA
- CM CEILING MOUNTED MICROPHONE

CEILINGS TYPES:

A. 600x600 PARTIALLY CONCEALED GRID ACT. CLG. @ 2400 AFF (TYP.) U.O.N.

B. LOBBY:600x600 PARTIALLY CONCEALED GRID ACT. CLG. @ 2700: AFF

C. TOILETS & JAN. CLOSET: W.P.GWB @ 2400 AFF (TYP.) U.O.N.

D. STORAGE & OTHER CLOSETS SOFFIT: GWB @ 2400 AFF

E. EWC SOFFIT: GWB @ 2100 AFF.

F. EXTERIOR SOFFIT: PERFORATED ALUM. PANELS PREFIN. WHITE @ 2700 AFF.

EXP EXPOSED CONSTRUCTION

## NOTES:

1. COORDINATE ALL ARCHITECTURAL DRAWINGS WITH ELECTRICAL AND MECHANICAL DRAWINGS.

2. FOR FURTHER INFORMATION, REFER TO ELECTRICAL AND MECHANICAL DRAWINGS.

3. SURFACE MOUNTED, PENDANT, WALL MOUNTED LIGHT FIXTURES MAY NOT BE SHOWN IN THESE DRAWINGS, WITH A FEW EXCEPTIONS.

4. VERIFY EXACT LOCATION OF CLG. ACCESS PANELS.

## GRAPHIC SCALE

1000mm 0 1M 2M 3M 4M 5M

SCALE 1:100

NOTE: ALL DIMENSIONS SHOWN ARE IN MILLIMETERS.

TRUE NORTH PROJECT NORTH

US Army Corps of Engineers New York District

| Symbol | Description | Date | Appr. |
|---|---|---|---|

U.S. ARMY ENGINEER DISTRICT
CORPS OF ENGINEERS
NEW YORK, NEW YORK

Designed by: Date: Size: Rev:
Dwn by: Ckd by: Drawing code:
Reviewed by: Drawing file no:
Submitted by: Plot date: 05-JAN-2005 16:24
Plot by: abanchoo
File: 50224A100.dgn
File name: S:\Benson\Military\Fort Hamilton\Drafting\Architectural\A100.dgn

PN. 50224
MILITARY POLICE STATION
FORT HAMILTON, NY

# SECOND FLOOR REFLECTED CEILING PLAN

Sheet reference number:
A–107

Submitted by: a3endfwb
pw:\\ccnadmillier-pw01.hamilton:AWPS\50224\Architecture\A100.dgn
Plot Date: 05-JAN-2005 16:24

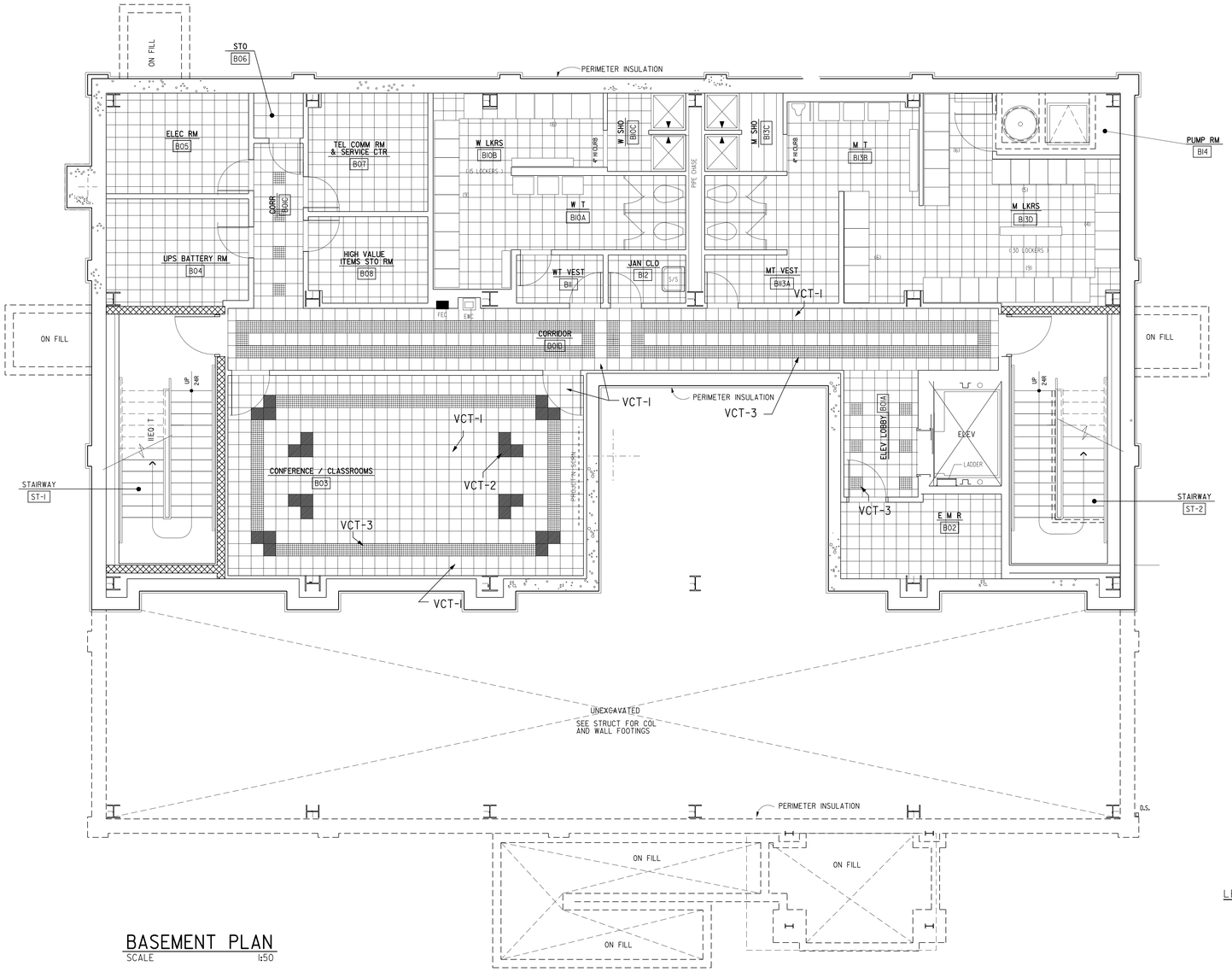


## BASEMENT PLAN

SCALE 1:50

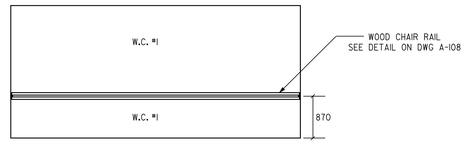


ROOM # B03

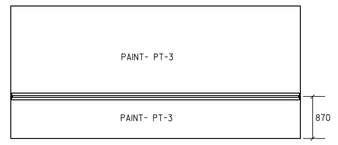


CORRIDOR B01A, B01B

TYPICAL WALL FINISHES

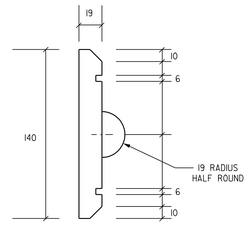


WOOD CHAIR RAIL SECTION

SCALE: NTS
(ALL DIMENSIONS IN MM.)

LEGEND

- VCT-1
- VCT-2
- VCT-3

GRAPHIC SCALE

1000mm 0 1M 2M 3M 4M 5M

SCALE 1:50

NOTE: ALL DIMENSIONS SHOWN ARE IN MILLIMETERS.

TRUE NORTH

PROJECT NORTH

US Army Corps of Engineers
New York District

| Date | Appr. | Description |
|---|---|---|
| 01/06/05 | | |

Designed by:
Dwn by: FWB
Ckd by:
Reviewed by:
Submitted by:
Date:
Size
Rev:
Drawing code:
Drawing file no.:
Plot date: 05-JAN-2005 16:24
Plot by: edwardwa
Date: 01/06/05 00:00
File name: S:\Mission\Military\Fort Hamilton\Military Architectural\MPBy_A-108.dgn

U.S. ARMY ENGINEER DISTRICT
CORPS OF ENGINEERS
NEW YORK, NEW YORK

PN. 52224
MILITARY POLICE STATION
FORT HAMILTON, NY

# FLOOR TILE PATTERN AT BASEMENT LEVEL

Sheet reference number:
A–108

Submitted by: e2endfwb
perforce:admin@p4prd1:hamilton4MPS:base:architecture:MPBy_A-108.dgn
Plot Date: 05-JAN-2005 16:24

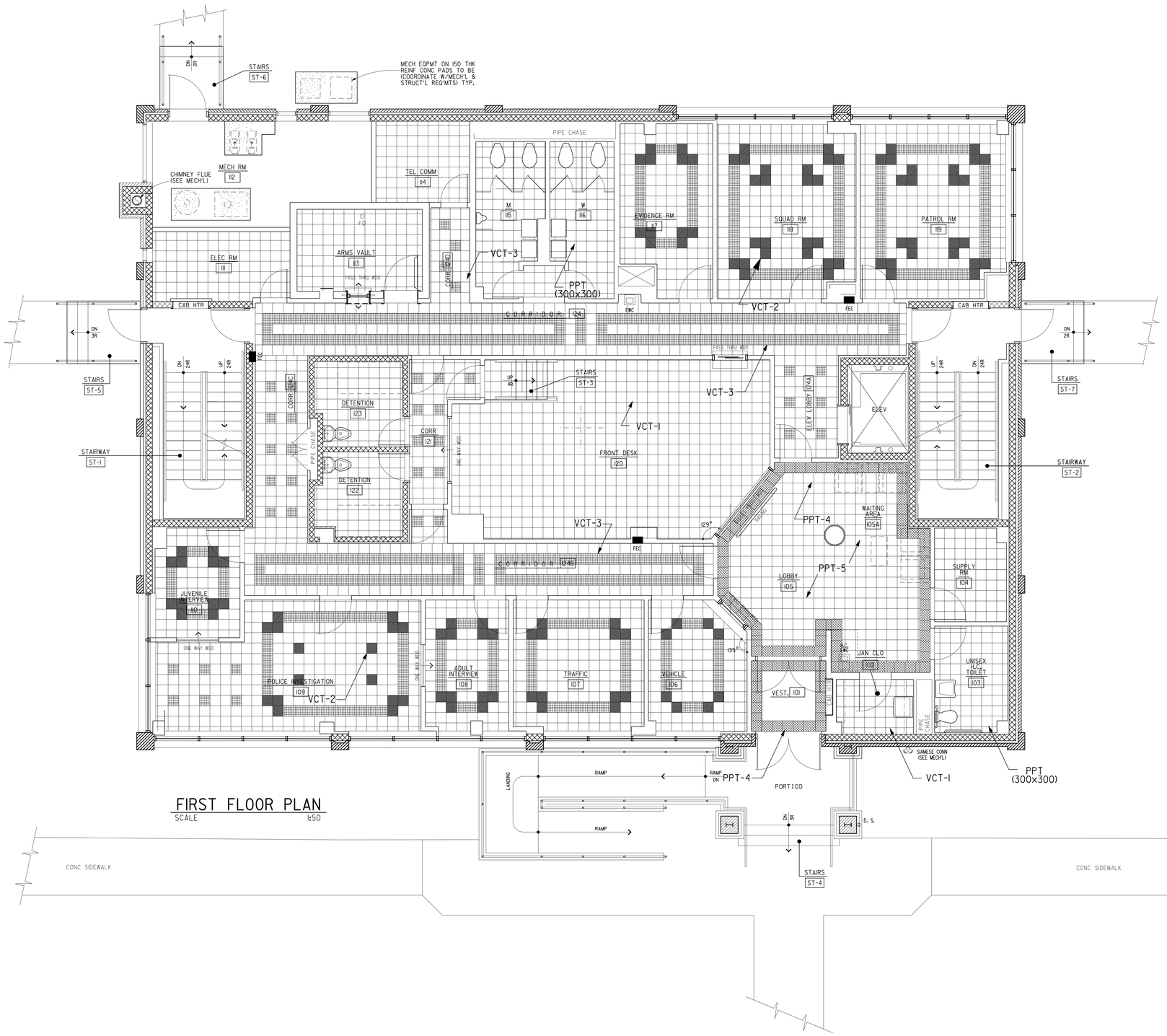


## FIRST FLOOR PLAN

SCALE 1:50

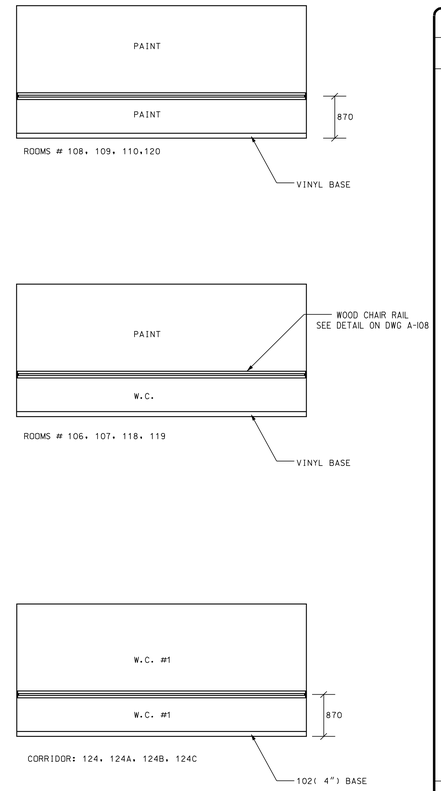


TYPICAL WALL FINISHES

LEGEND

- VCT-1
- VCT-2
- VCT-3

NOTE: ALL DIMENSIONS SHOWN ARE IN MILLIMETERS.

US Army Corps of Engineers
New York District

| Symbol | Description | Date | Appr. |
|---|---|---|---|

| Rev. | Size | Date: | Designed by: | Dwn by: | Ckd by: FWB | Reviewed by: | Submitted by: | Drawing file no: | Drawing code: | Plot date: 05-JAN-2005 16:25 | Plot by: eberchek | Scale: N/A/0000/0000 |
|---|---|---|---|---|---|---|---|---|---|---|---|---|

U.S. ARMY ENGINEER DISTRICT
CORPS OF ENGINEERS
NEW YORK, NEW YORK

File name: S:\Memorial\Military\Fort Hamilton\Architectural\MPDs A-108.dgn

PN 52224
MILITARY POLICE STATION
FORT HAMILTON, NY

# FLOOR TILE PATTERN AT FIRST FLOOR

Sheet reference number:
A–109

Submitted by: e3endfwb
gerthorsdemitlbsy@erf Hamilton@FS1ccpfc.ccfb.lcu.drafting 8.1.05.dgn
Plot Dates 05-JAN-2005 16:25

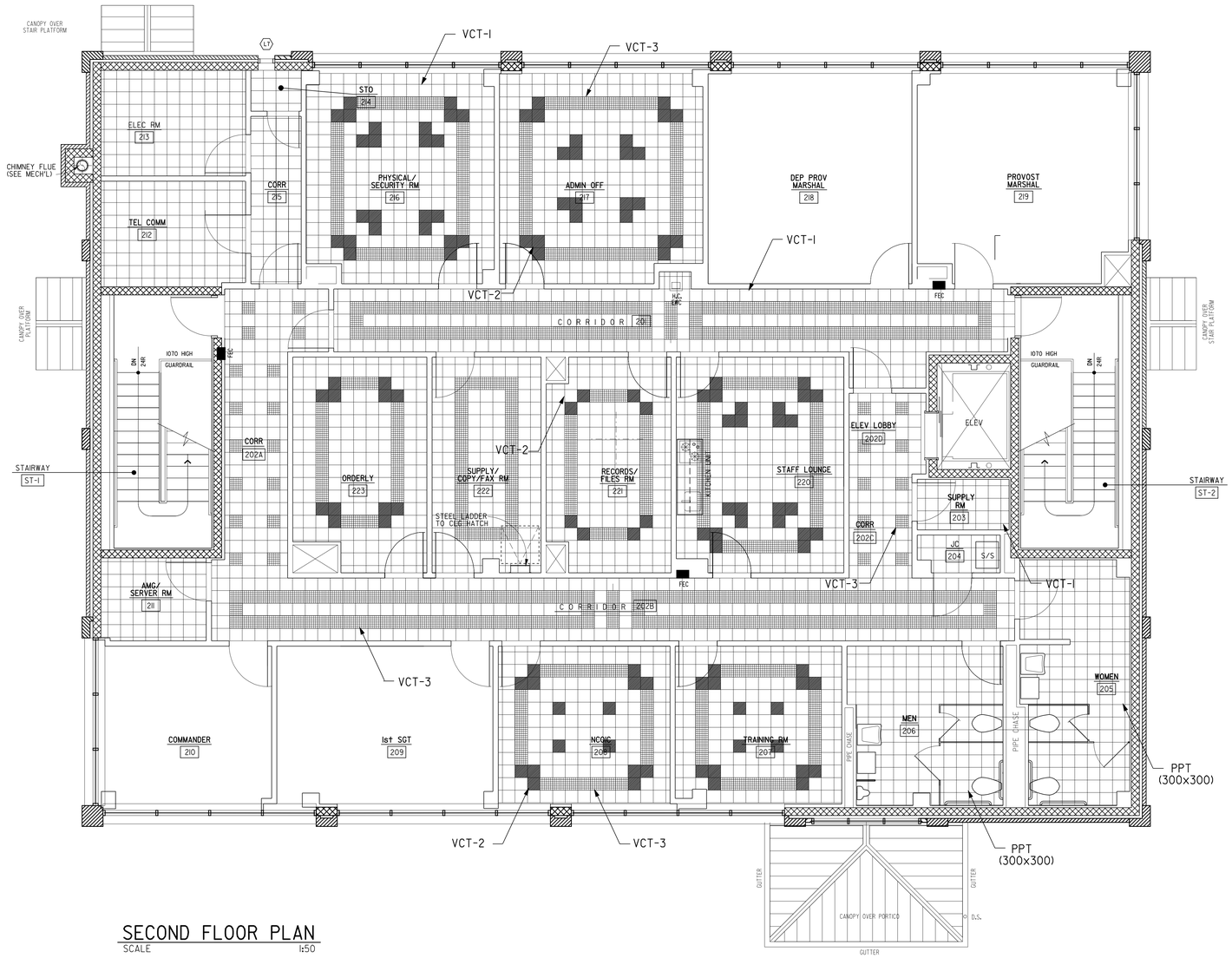


## SECOND FLOOR PLAN

SCALE 1:50

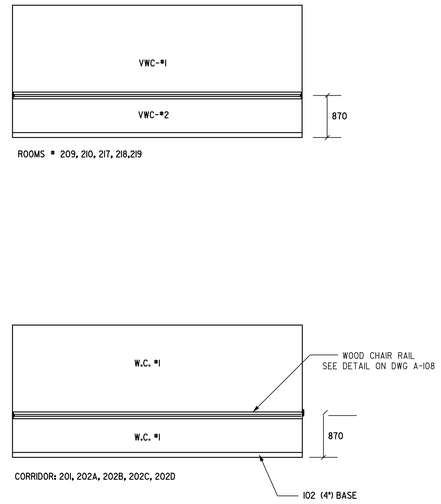


## TYIPICAL WALL FINISHES

## LEGEND

- VCT-1
- VCT-2
- VCT-3

NOTE: ALL DIMENSIONS SHOWN ARE IN MILLIMETERS.

US Army Corps of Engineers
New York District

| Date | Appr. | Description |
|---|---|---|
| | | |

Submitted

Designed by: | Date: | Size | Rev:
Dwn by: FWB | Ckd by: | Drawing file no.:
Reviewed by: | Drawing code:
Submitted by: | Plot date: 05-JAN-2005 16:25 | Plot by: adandreo | File: 8000500000

U.S. ARMY ENGINEER DISTRICT
CORPS OF ENGINEERS
NEW YORK, NEW YORK

File name: S:\Benson\military\fort hamilton\Military Architectural\MPfile_A110.dgn

PN 52224
MILITARY POLICE STATION
FORT HAMILTON, NY

# FLOOR TILE PATTERN
# SECOND FLOOR

Sheet reference number:
A–110

Submitted by: adandreo
Plot Date: 05-JAN-2005 16:25
Plot Scale: 1.000000
Plot Driver: pdf.pltcfg
Active Model: MainModel
Layout: Layout1
Active Layout: A110.dgn

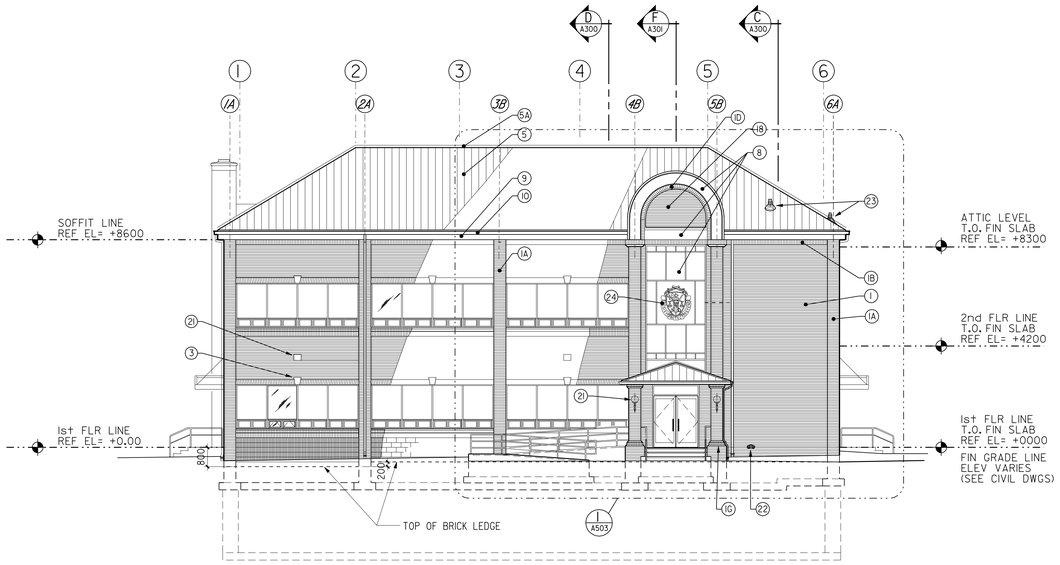


## NORTH ELEVATION

SCALE 1:100

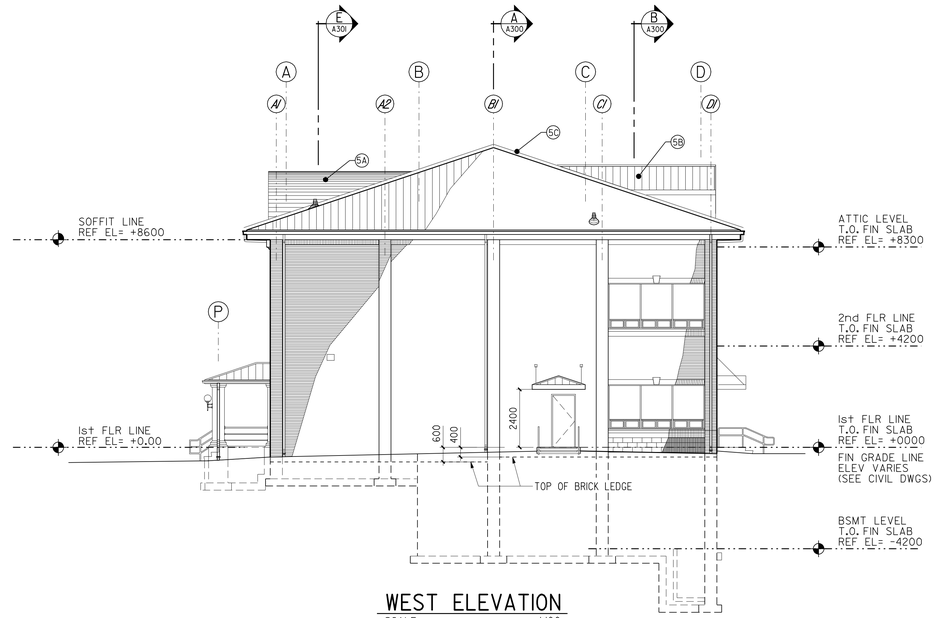


## WEST ELEVATION

SCALE 1:100

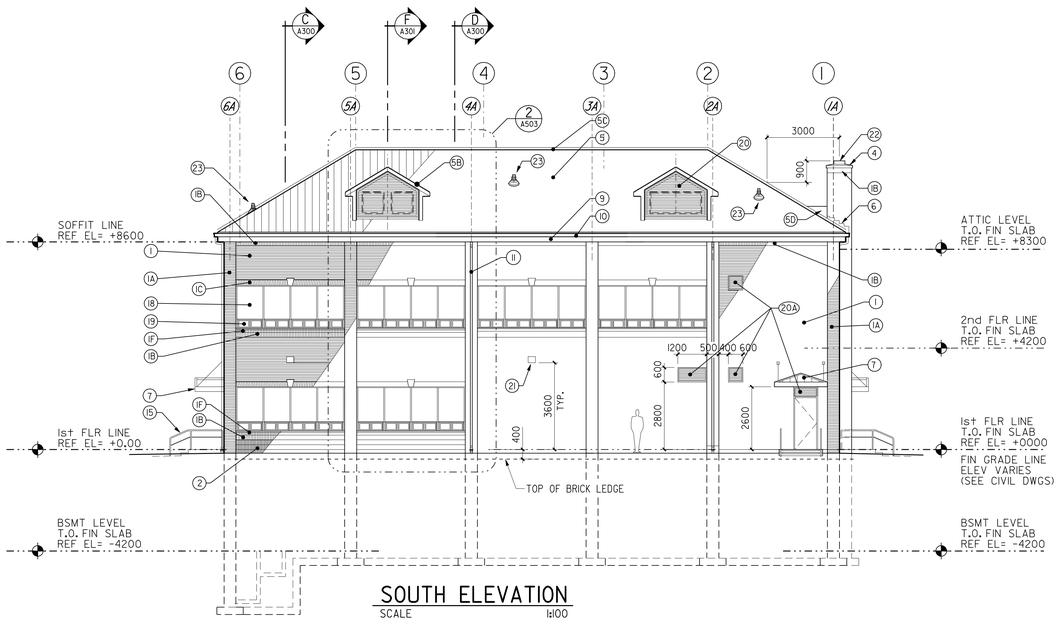


## SOUTH ELEVATION

SCALE 1:100

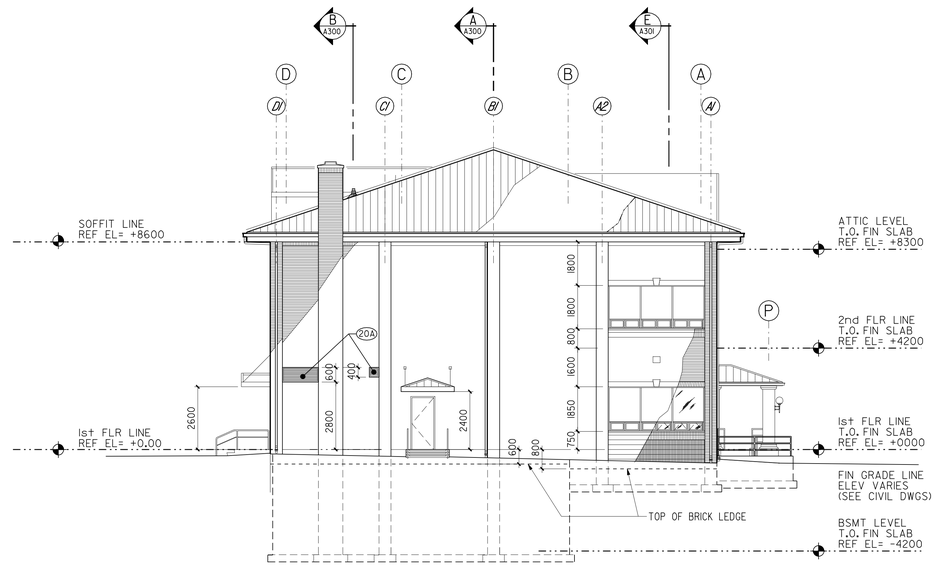


## EAST ELEVATION

SCALE 1:100

## EXTERIOR BUILDING MATERIAL LEGEND:

***1. STANDARD FACE BRICK***
ACME BRICK
COLOR: BOSTON RED

***1A. BRICK PILASTER***

***1B. SOLDIER COURSE***

***1C. SOLDIER COURSE (SLANTED)***

***1D. SOLDIER COURSE ARCH***

***1E. ROWLOCK COURSE***

***1F. ROWLOCK COURSE SILL (SLOPED)***

***1G. SPECIAL SHAPED BRICK***

***2. SPLIT FACED CMU***
CLAYTON CO.
COLOR : C-6 CLAYTON WHITE

***3. LIMESTONE KEY***
NATURAL

***4. PRECAST CONCRETE***
COLOR TO MATCH LIMESTONE

***5. METAL ROOF ASSEMBLY***
UNA – CLAD #UC6 STANDING SEAM
COLOR: DARK BRONZE

***5A. BARREL VAULT ROOF***
COLOR TO MATCH
STANDING SEAM ROOF

***5B. DORMER ROOF***
COLOR TO MATCH
STANDING SEAM ROOF

***5C. RIDGE/HIP VENT FLASHING***
COLOR TO MATCH
STANDING SEAM ROOF

***5D. CRICKET FLASHNG***
COLOR TO MATCH
STANDING SEAM ROOF

***6. STEPPED FLASHING***
COLOR TO MATCH
STANDING SEAM ROOF

***7. CANOPY ROOF ASSEMBLY***
METAL CANOPIES SHALL BE STANDING SEAM
TO MATCH MAIN ROOF

***8. FORMWALL***
COLOR TO MATCH STANDING SEAM ROOF?

***9. FASCIA***
COLOR TO MATCH
STANDING SEAM ROOF

***10. GUTTER***
COLOR TO MATCH
STANDING SEAM ROOF

***11. RAINLEADER***
COLOR TO MATCH
STANDING SEAM ROOF

***12. C.I. BOOT***
COLOR TO MATCH
STANDING SEAM ROOF

***13. EAVES SOFFIT***
PREFINISHED PERFORATED ALUMINUM PANELS
COLOR: MATTE WHITE

***14. MAIN ENTRY SOFFIT***
LINEAR PREFIN ALUM STRIPS
COLOR: MATTE WHITE

***15. STAIR/RAMP RAILING***
COLOR TO MATCH
STANDING SEAM ROOF

***16. EXTERIOR MET DOOR & FRAME***
DARK BROWN TO MATCH STANDING SEAM ROOF

***17. EXTERIOR WINDOW FRAME***
DARK BROWN TO MATCH STANDING SEAM ROOF

***18. FIXED GLASS***
BRONZE TINTED INSUL GLASS

***19. AWNING WINDOW***
BRONZE TINTED INSUL GLASS

***20. METAL LOUVERS***
DARK BROWN TO MATCH STANDING SEAM ROOF

***20A. METAL LOUVERS***
COLOR TO MATCH ADJACENT SURFACES

***21. EXTERIOR MOUNTED LIGHT FIXTURES***
SEE ELECTRICAL DRAWINGS.

***22. MECH'L EQUIPMENT***
SEE MECH'L

***23. VENT THRU ROOF (VTR)***
BY OTHERS

***24. MILITARY POLICE INSIGNIA***
BY OTHERS

## NOTE:

1. COLORS IN THIS DRAWING REFER ONLY TO CERTAIN MANUFACTURER'S DESIGNATION AND NOT INTENDED TO LIMIT SELECTION OF MANUFACTURERS. COLOR SELECTIONS SHALL BE IN COMPLIANCE WITH BASE STANDARDS AND BE APPROVED BY CONTRACTING OFFICER REPRESENTATIVE (COR).

2. COLORS INDICATED FOR METAL ROOFING ASSEMBLY BY "UNA – CLAD" USING GLIDDEN NUBELAR COATING (TM) OR EQUAL.. THIS PREMIUM POLYVINYLIDENE FLUORIDE (PVF) COATING FORMULATED WITH KYNAR*500.

Address:
101 LUND BLVD
ANOKA, MN. 55303
Tel. 1(763) 576-9595

GRAPHIC SCALE
SCALE 1 = 100
NOTE: ALL DIMENSIONS SHOWN ARE IN MILLIMETERS.

US Army Corps of Engineers
New York District

| Symbol | Description | Date | Appr. |
|---|---|---|---|

U.S. ARMY ENGINEER DISTRICT
CORPS OF ENGINEERS
NEW YORK, NEW YORK

Designed by: | Date: | Size: | Rev.
Dwn by: | Ckd by: | Drawing file no.: | Drawing code:
Reviewed by: | Pnd date: 05-JUN-2006 16:25 | Pnt by: admcleb
Submitted by: | Plot Scale: 25x36(600)(1:100)
File name: S:\Benson\military\fortHamilton\MPBy\architecture\MPBy_A-200.dgn

PN 82224
MILITARY POLICE STATION
FORT HAMILTON, NY

# BUILDING ELEVATIONS

Sheet reference number:
A–200

Submitted by:admcleb Plot Date: FRI05-JUN-2006 16:25
Settings:admcleb\ae-pwdarmy\pwadnyd\bsd\standards\uniformat\ae-a08a08gn1 A-200.dgn

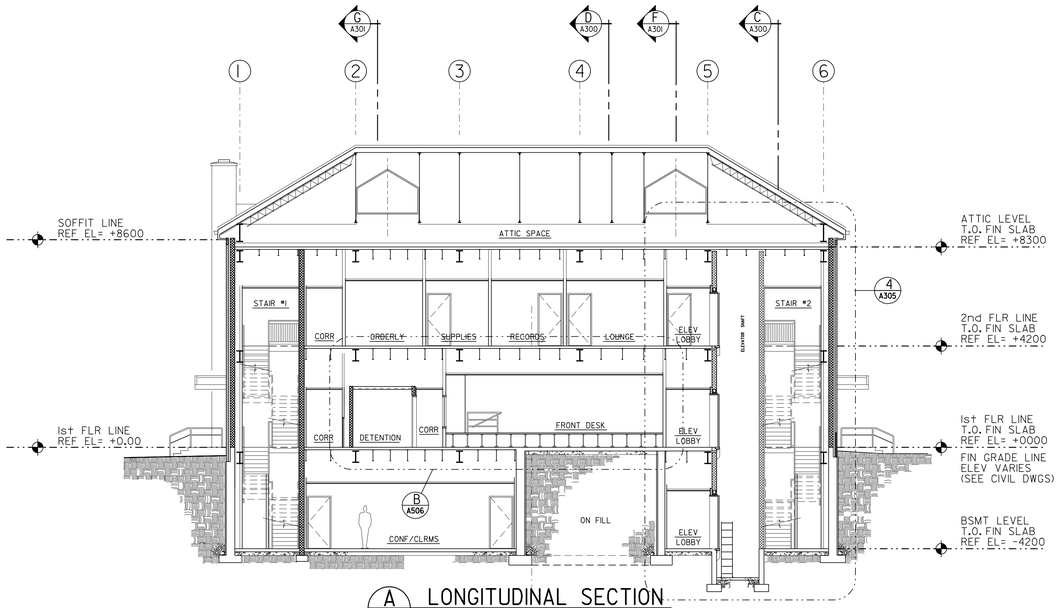


A LONGITUDINAL SECTION
SCALE 1:100
A100 A300
A101
A102
A103
A300

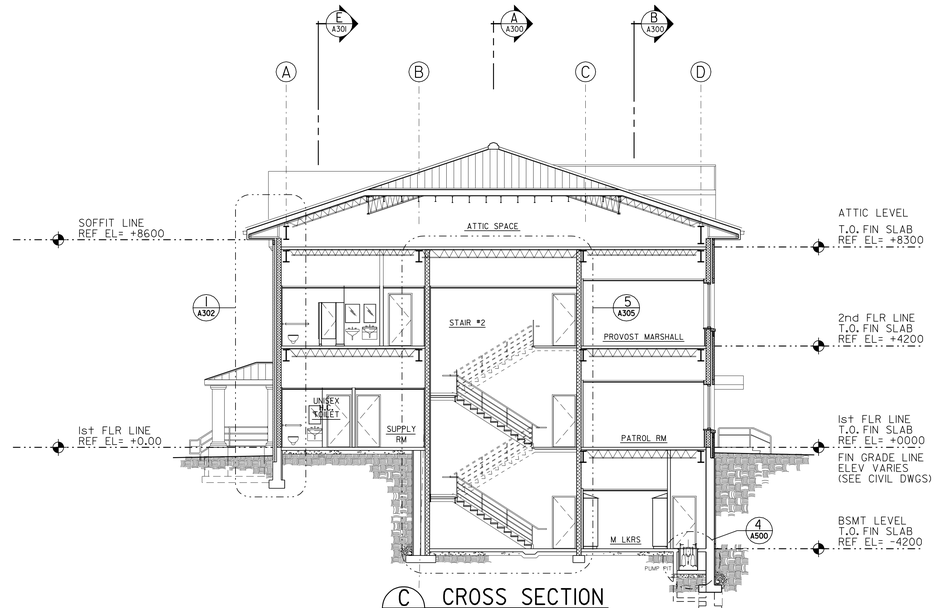


C CROSS SECTION
SCALE 1:100
A100 A300
A101
A102
A103
A300

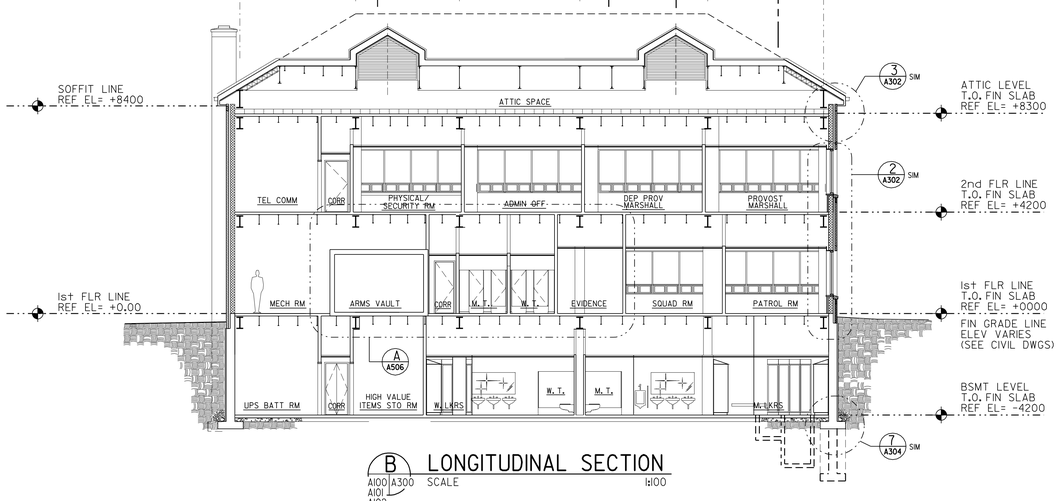


B LONGITUDINAL SECTION
SCALE 1:100
A100 A300
A101
A102
A103
A300

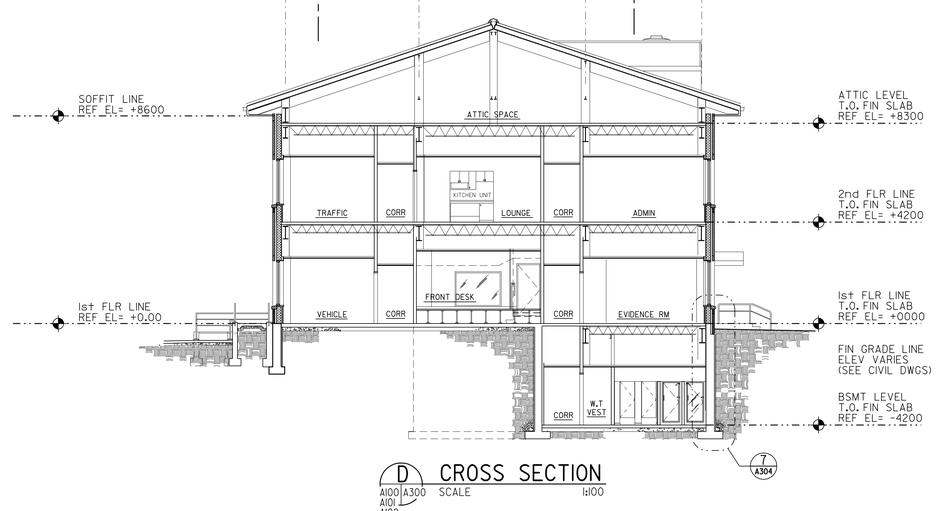


D CROSS SECTION
SCALE 1:100
A100 A300
A101
A102
A103
A300

GRAPHIC SCALE
SCALE 1 = 100

NOTE: ALL DIMENSIONS SHOWN ARE IN MILLIMETERS.

US Army Corps of Engineers
New York District

| Symbol | Description | Date | App. |
|---|---|---|---|

| | | | |
|---|---|---|---|
| Designed by: | Date: | Size: | Rev: |
| Dwn by: | Ckd by: | Drawing file no.: | |
| Reviewed by: | | Drawing code: | |
| Submitted by: | | Print date: 05-JAN-2005 16:25 | |
| | | File for: abandonde | |
| | | Scale: 100.000000000000 | |

U.S. ARMY ENGINEER DISTRICT
CORPS OF ENGINEERS
NEW YORK, NEW YORK

File name: S:\Services\military\fortHamilton\MPBuildingLandscape\FortHa_A300.dgn

PN 82224
MILITARY POLICE STATION
FORT HAMILTON, NY

# BUILDING LONGITUDNAL AND CROSS SECTIONS

Sheet reference number:
A–300

Submitted by: e3endlab Plot Date: 05-JAN-2005 16:25
Latter:abadmin:User:peter Hamilton:pwMPS:fpatarchitecture:sdMPS16 A-300.dgn

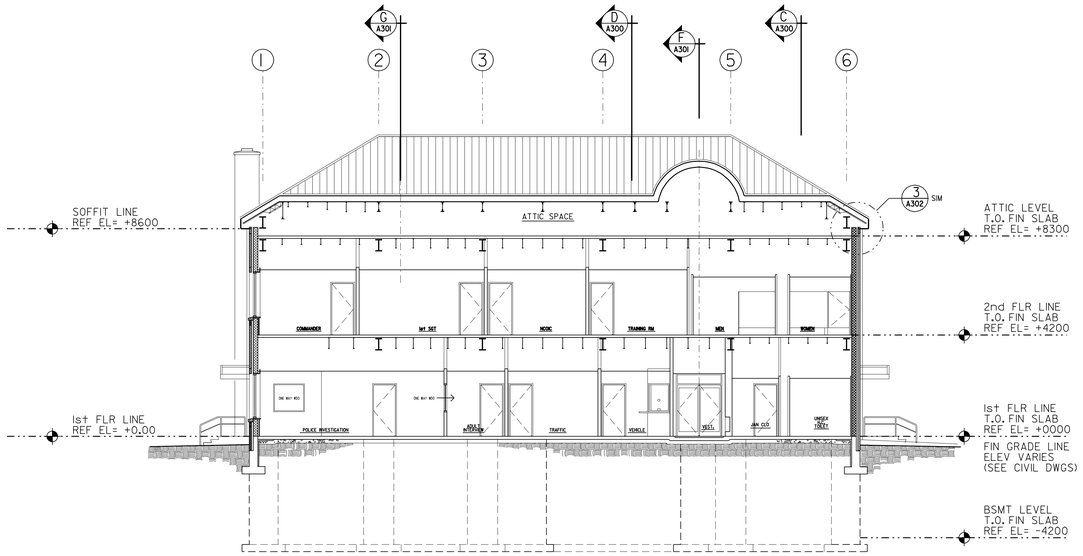


E LONGITUDINAL SECTION
A100 A301 A101 A102 A103 A301
SCALE 1:100

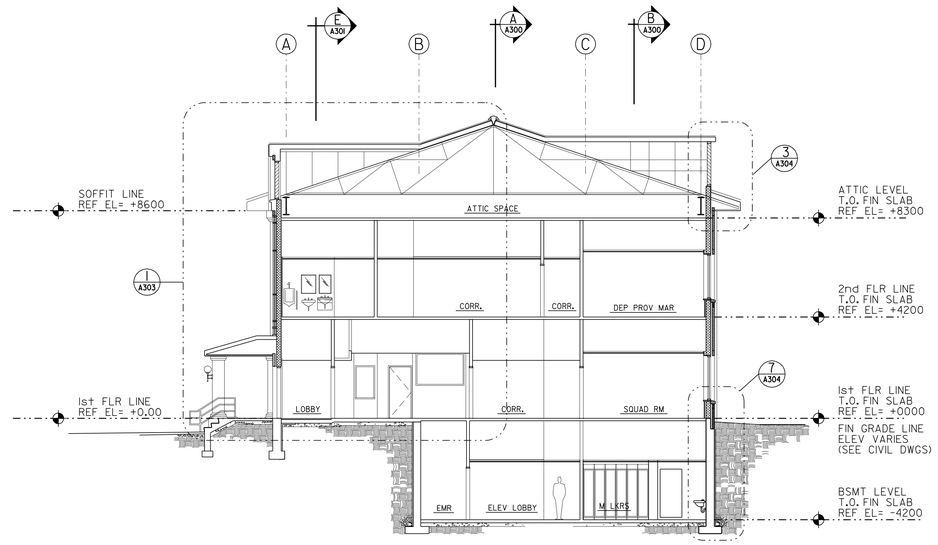


F CROSS SECTION
A100 A301 A101 A102 A103 A300
SCALE 1:100

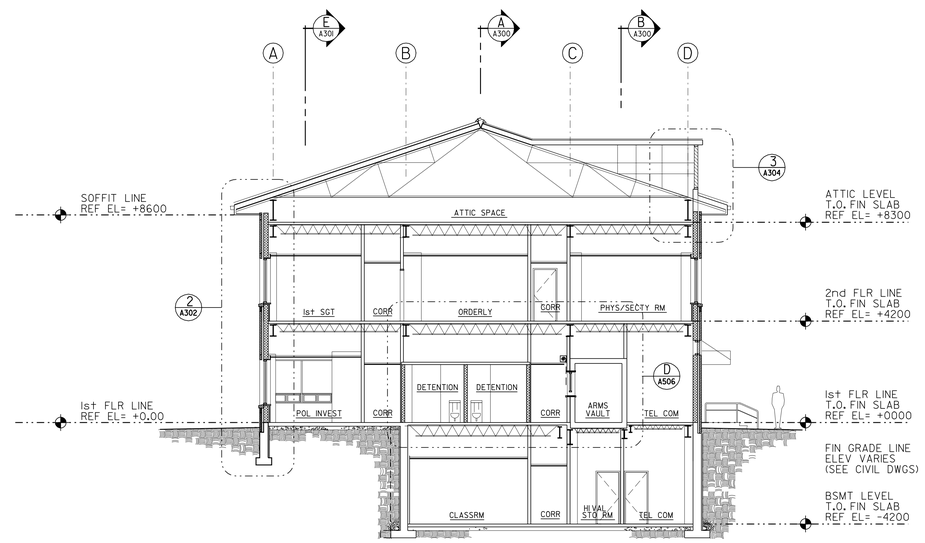


G CROSS SECTION
A100 A301 A101 A102 A103 A300
SCALE 1:100

GRAPHIC SCALE
SCALE 1 = 100
NOTE: ALL DIMENSIONS SHOWN ARE IN MILLIMETERS.

US Army Corps of Engineers
New York District

| Rev. | Date | Description | Appr. |
|---|---|---|---|

| | |
|---|---|
| Designed by: | Date: |
| Dwn by: | Ckd by: |
| Reviewed by: | Drawing file no: |
| Submitted by: | Drawing code: |
| | Plot date: 05-JAN-2005 16:25 |
| | Plot by: e3endfwb |
| | File: a301.dgn |

U.S. ARMY ENGINEER DISTRICT
CORPS OF ENGINEERS
NEW YORK, NEW YORK

File name: S:\Division\Military\Fort Hamilton\UMPD\Architecture\A-PDFs\A-300.dgn

PN 82224
MILITARY POLICE STATION
FORT HAMILTON, NY

# BUILDING LONGITUDNAL AND CROSS SECTIONS

Sheet reference number:
A-301

Submitted by: e3endfwb
Plot Date: 05-JAN-2005 16:25
Plot Scale: 1:1
Plot Driver: pdf.pltcfg
Model: S:\cad\military\pd82224 fort hamilton\pd82224architecture\pd82224 a-300.dgn

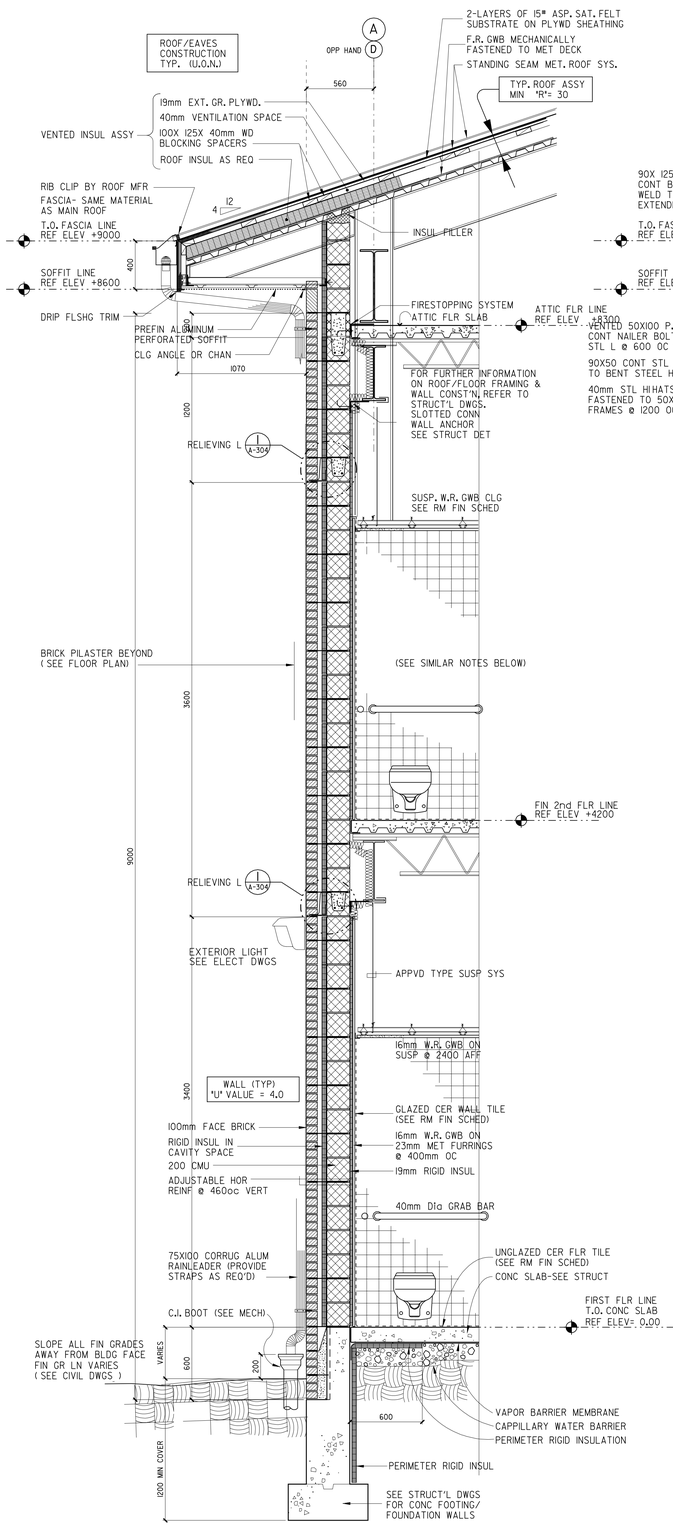


1 A302 TYP. WALL SECTION (U.O.N.)
SCALE 1:20

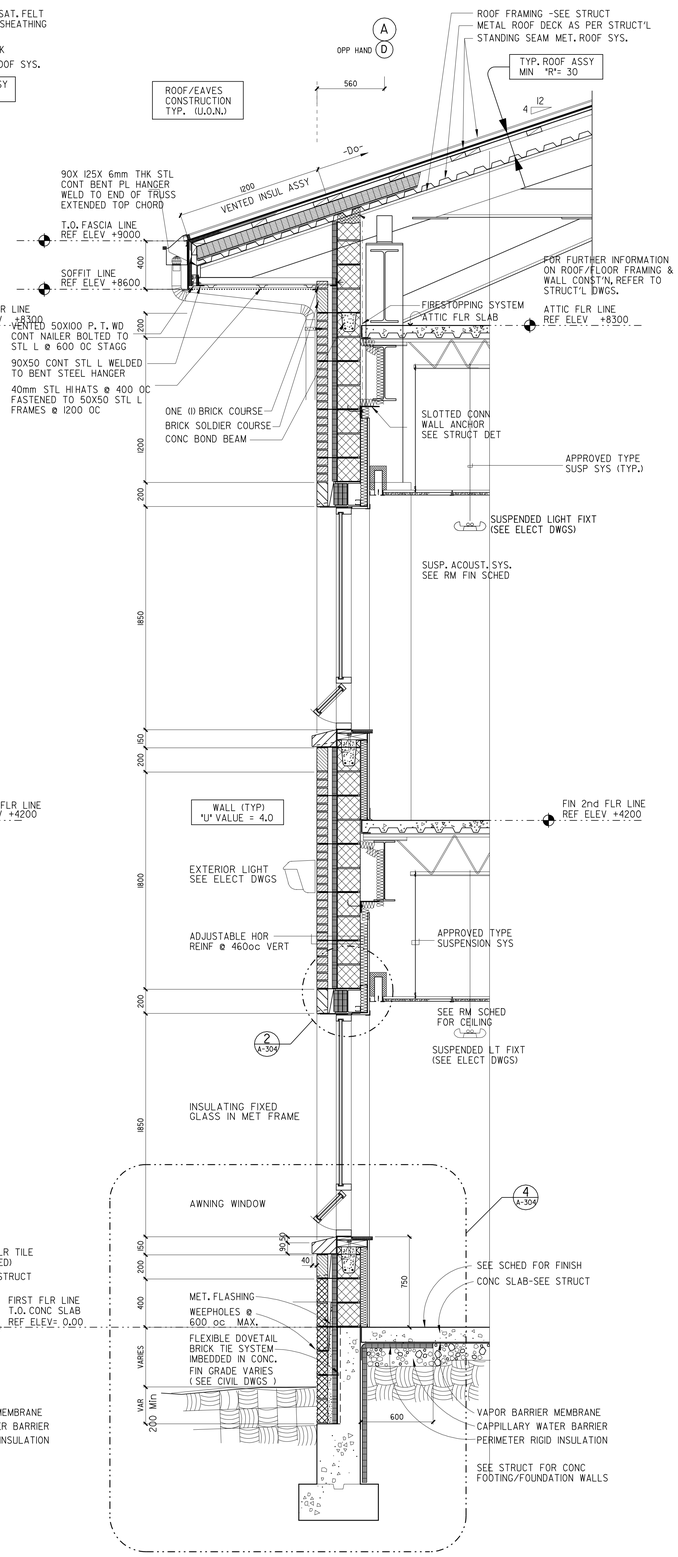


2 A302 WALL SECTION THRU WINDOW
SCALE 1:20

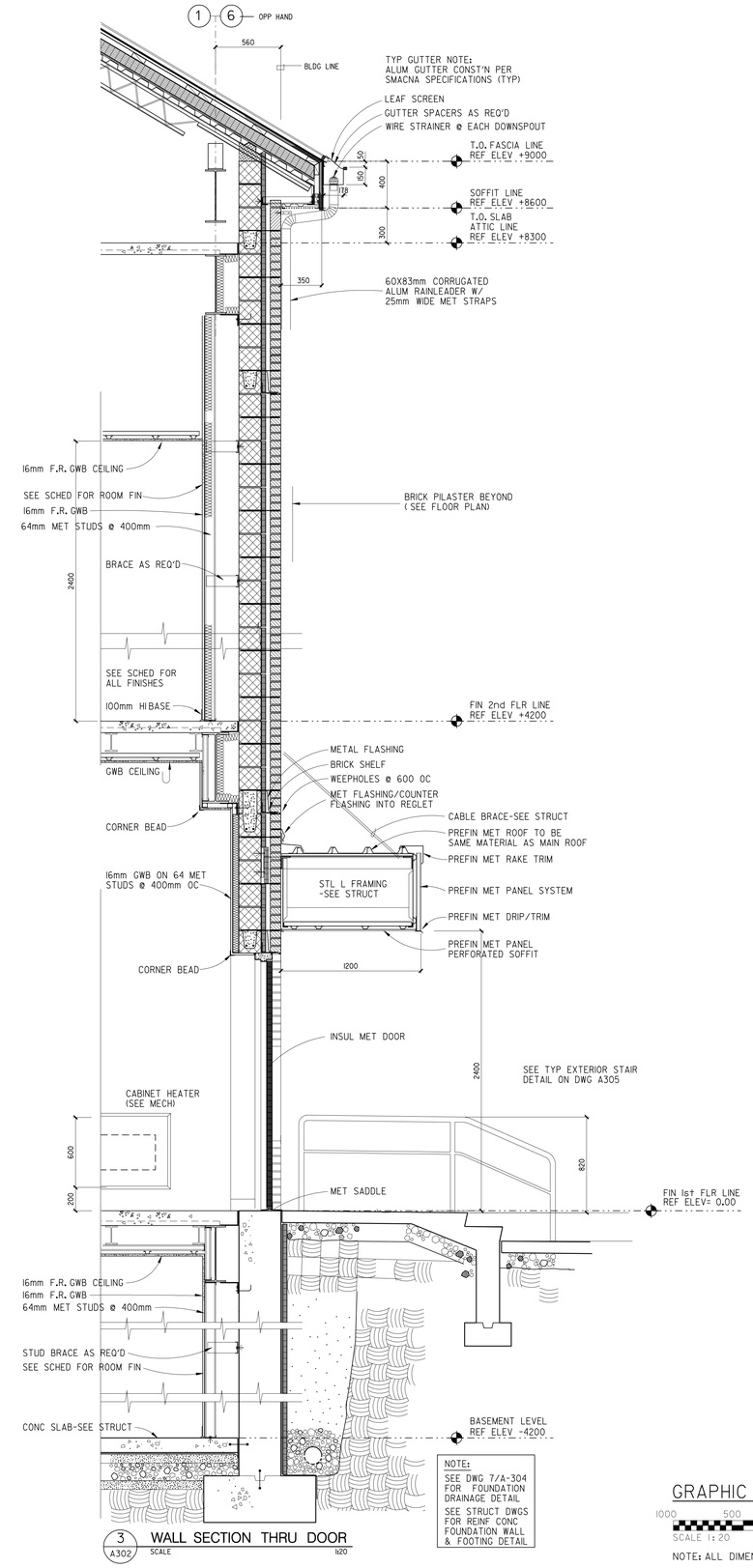


NOTE:
SEE DWG 7/A-304 FOR FOUNDATION DRAINAGE DETAIL
SEE STRUCT DWGS FOR REINF CONC FOUNDATION WALL & FOOTING DETAIL

3 A302 WALL SECTION THRU DOOR
SCALE 1:20

GRAPHIC SCALE
1000 500 0 1000mm
SCALE 1:20

NOTE: ALL DIMENSIONS SHOWN ARE IN MILLIMETERS.

US Army Corps of Engineers
New York District

| Symbol | Description | Date | App. |
|---|---|---|---|

| Rev. | Size | Date: | Designed by: | Dwn by: | Ckd by: | Reviewed by: | Submitted by: |
|---|---|---|---|---|---|---|---|
| | | Drawing file no: | Drawing code: | | | | |
| | | Plot date: 05-JAN-2005 16:25 | Plot by: abondwe | Plotter: 32,1000DPI,COLOR | | | |

U.S. ARMY ENGINEER DISTRICT
CORPS OF ENGINEERS
NEW YORK, NEW YORK

File name: S:\Services\military\Section\Projects\PDPlbs\architectural\DWGs\A-302.dgn

PN 52224
MILITARY POLICE STATION
FORT HAMILTON, NY

# WALL SECTIONS

Sheet reference number:
A-302

Submitted by: eBendwe
Submittal Date: 4 Hamilton\PDPlbs\Plot\architectural\dwgs\A-302.dgn
Plot Date: 05-JAN-2005 16:25

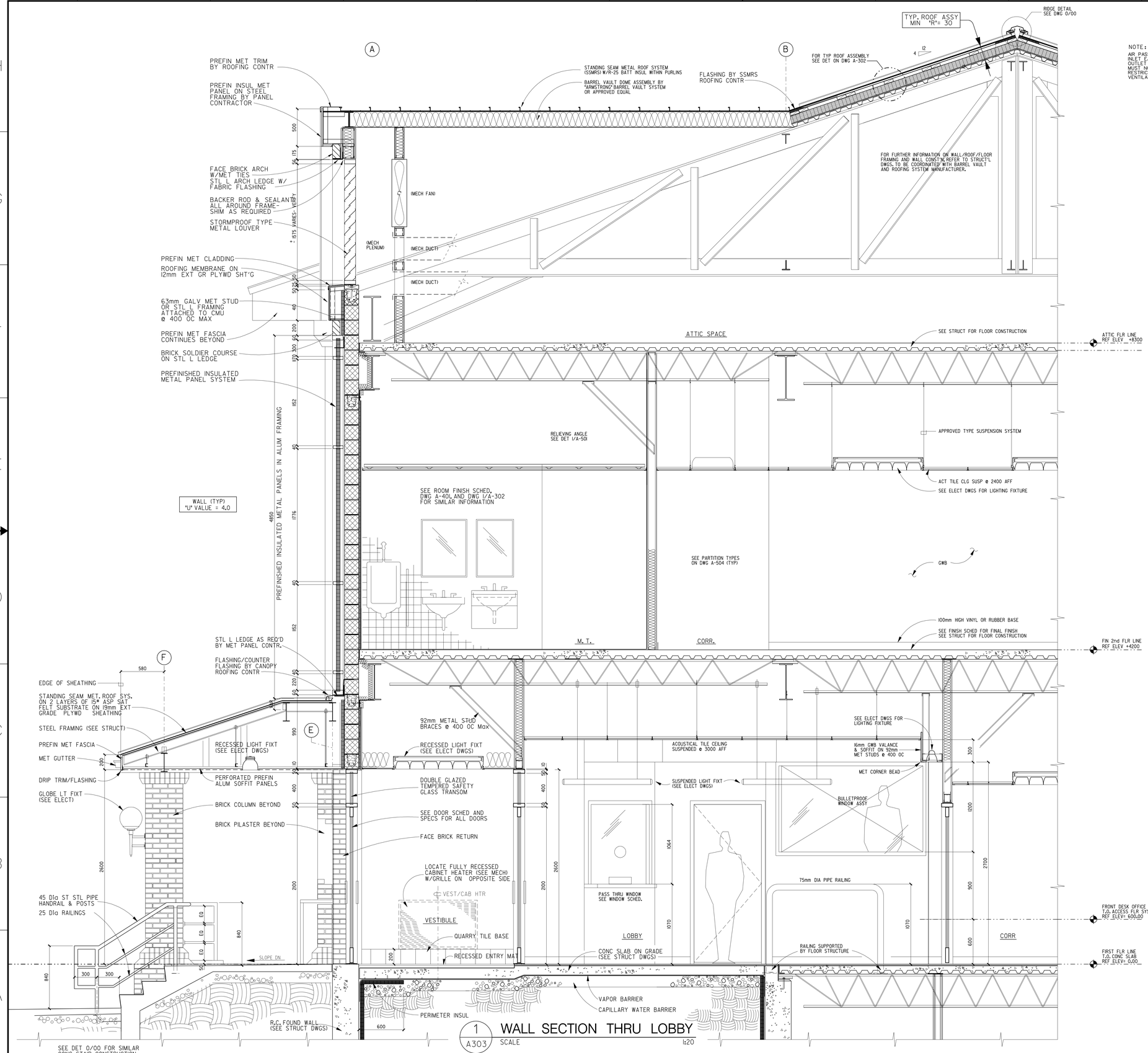


1 A303 WALL SECTION THRU LOBBY
SCALE 1:20

NOTE:
AIR PASSAGEWAY BETWEEN THE INLET EAVE VENTS AND THE OUTLET RIDGE OR HIP VENTS MUST NOT BE BLOCKED OR RESTRICTED TO ALLOW PROPER VENTILATION OF THE SPACE

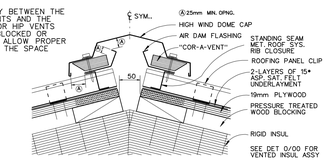


2 303 RIDGE OR HIP VENT
NO SCALE

NOTE:
OFFSET ALL VENT PIPES BELOW ROOF VENT PIPES SHALL NOT PENETRATE AT STANDING SEAMS.

NOTE:
FLATTEN PANEL RIBS AT POINT OF BOOT INTERSECTION TO ALLOW BOOT TO NEST FLAT AGAINST MET ROOF PANEL PAN.

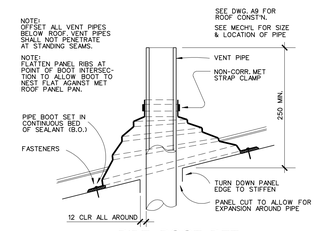


3 303 PIPE BOOT DET
NO SCALE

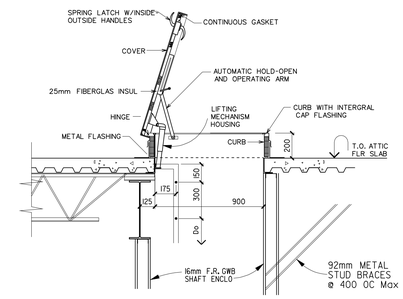


4 303 FLOOR HATCH DETAIL
NO SCALE

US Army Corps of Engineers
New York District

| Symbol | Description | Date | Appr. |
|---|---|---|---|

| | | | Size: | Rev.: |
|---|---|---|---|---|
| Designed by: | | Date: | | |
| Dwn by: | Ckd by: | Drawing file no.: | | |
| Reviewed by: | | Drawing code: | | |
| Submitted by: | | Plot date: 05-JAN-2005 16:25<br>Plot by: edavidw<br>Scale: 0.0000000000 | | |

U.S. ARMY ENGINEER DISTRICT
CORPS OF ENGINEERS
NEW YORK, NEW YORK

File name: G:\Mission\Military\Fort Hamilton\Military\Architecture\MPlfts A-303.dgn

PN 52224
MILITARY POLICE STATION
FORT HAMILTON, NY

# SECTION THRU LOBBY

Sheet reference number:
A–303

Plot Dates: 05-JAN-2005 16:25
Submitted by: e3edwfwb
g:\efforts\contract\ny\ny01\fortham\military\architecture\mpfts a-303.dgn

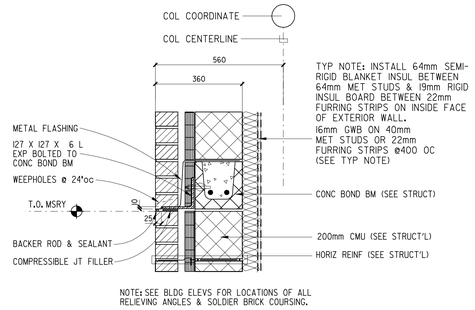


1 RELIEVING ANGLE DET
A301 A304 SCALE

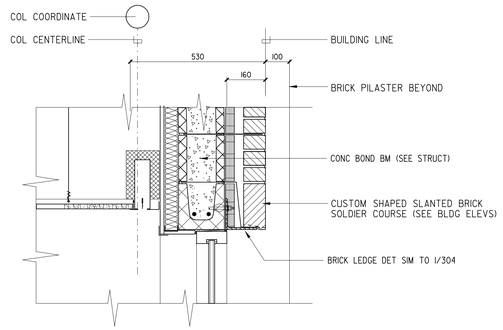


2 WINDOW HEAD DETAIL
A302 A304 SCALE

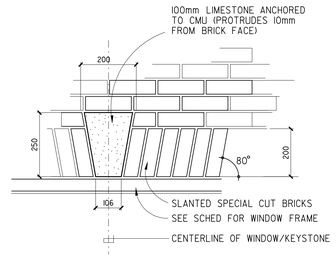


3 KEYSTONE DETAIL
A200 A304 SCALE

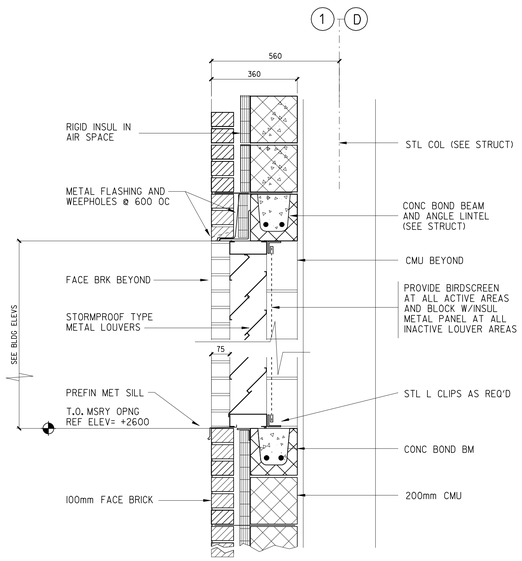


4 SECTION THRU LOUVER
A301 A304 SCALE

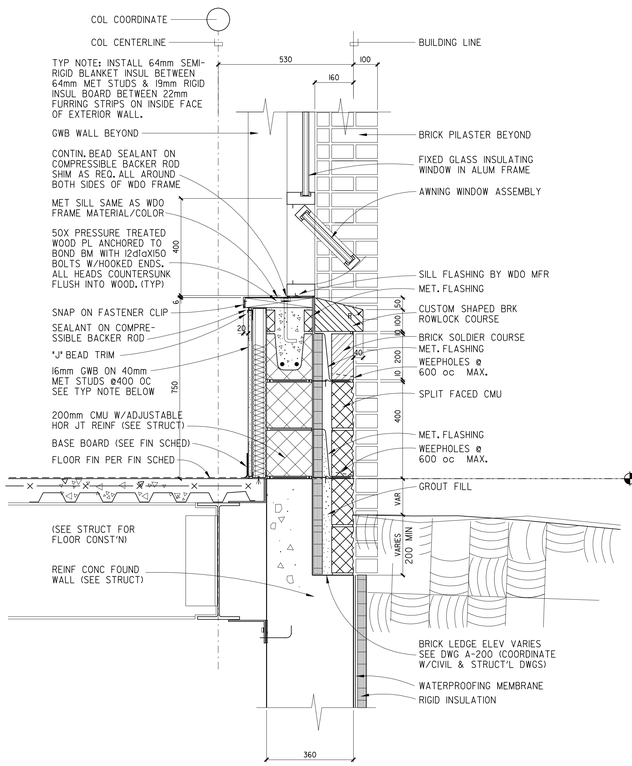


5 WINDOW SILL DETAIL
A302 A304 SCALE 1:10

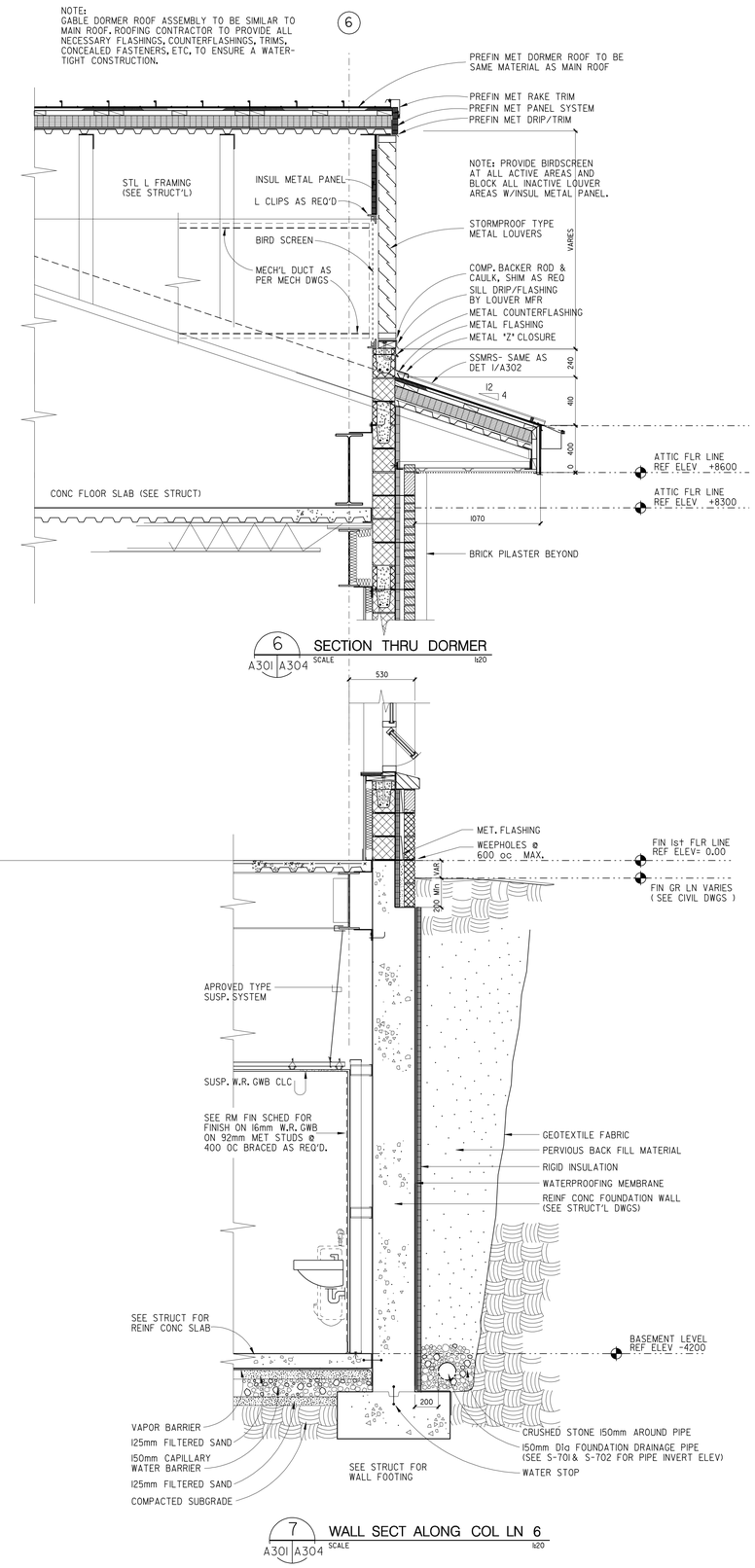


6 SECTION THRU DORMER
A301 A304 SCALE 1:20

7 WALL SECT ALONG COL LN 6
A301 A304 SCALE 1:20

NOTE: ALL DIMENSIONS SHOWN ARE IN MILLIMETERS.

US Army Corps of Engineers
New York District

| Symbol | Description | Date | App. |
|---|---|---|---|

| | | | |
|---|---|---|---|
| Designed by: | | Date: | Size: Rev: |
| Dwn by: | Ckd by: | Drawing file no.: | |
| Reviewed by: | | Drawing code: | |
| Submitted by: | | Plot date: 05-JUN-2005 16:25<br>Plot by: e3dendwb<br>File: 6200700003 | |

U.S. ARMY ENGINEER DISTRICT
CORPS OF ENGINEERS
NEW YORK, NEW YORK

File name: S:\Branch\Military\Fort Hamilton\MPS\Architectural\A-304.dgn

PN 62224
MILITARY POLICE STATION
FORT HAMILTON, NY

# WALL SECTION AND MISCELLANEOUS DETAILS

Sheet reference number:
A–304

Plot Date: 05-JUN-2005 16:25
Submitted by: e3endwb
S:\Branch\Military\Fort Hamilton\MPS\Architectural\A-304.dgn

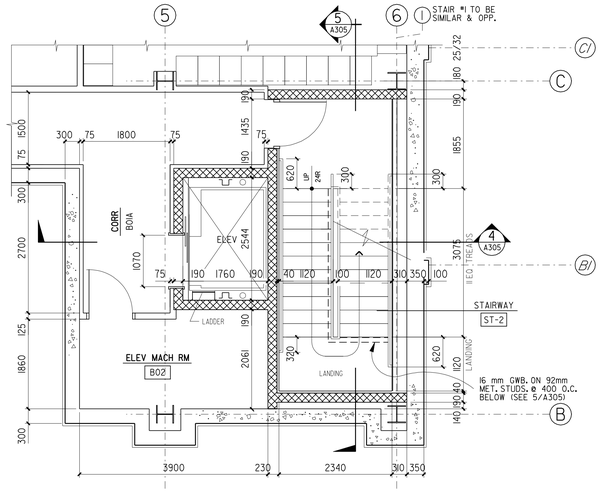


1 PARTIAL BASEMENT PLAN
A100 A305 SCALE 1:25

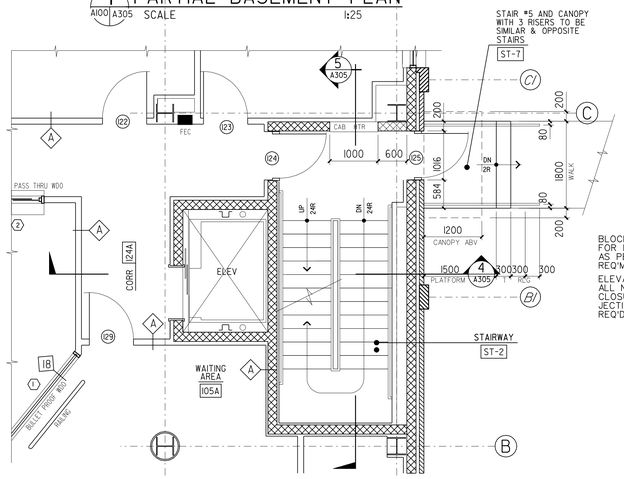


2 PARTIAL 1st FLOOR PLAN
A101 A305 SCALE 1:25

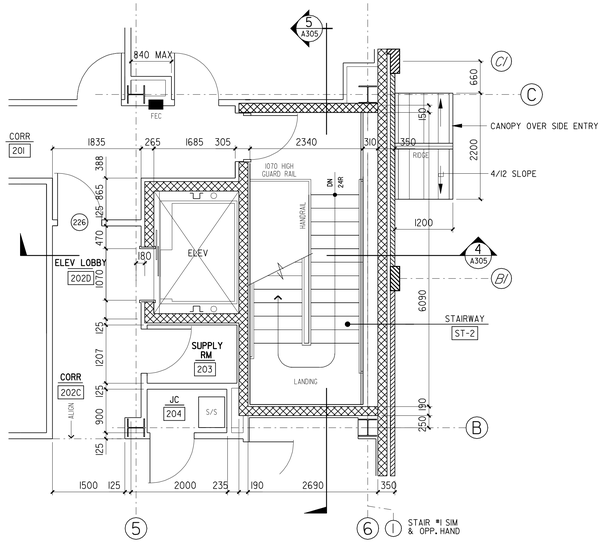


3 PARTIAL 2nd FLOOR PLAN
A102 A305 SCALE 1:25

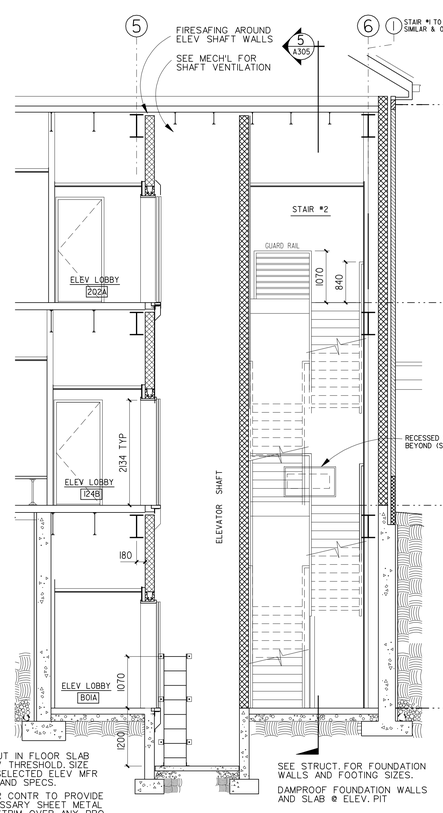


4 SECTION THRU ELEV/STAIR #2
A305 (STAIR #1 SIMILAR & OPP HAND) 1:25

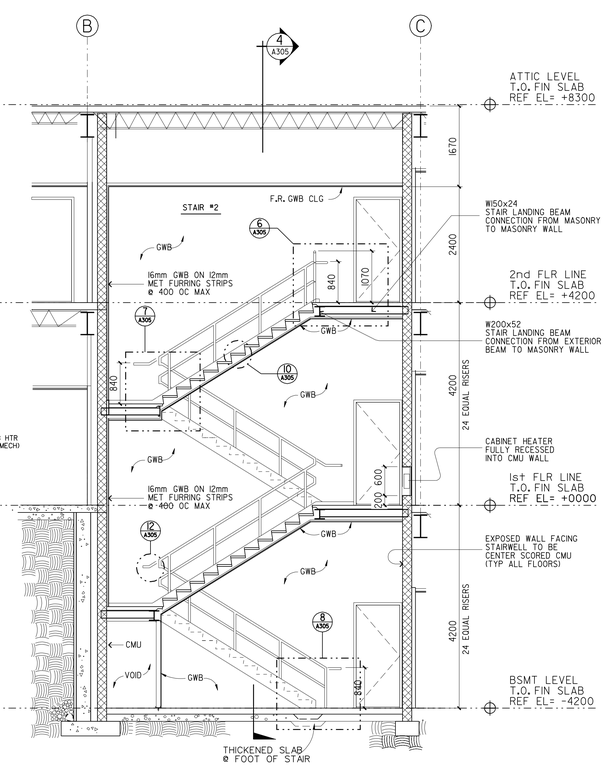


5 SECTION THRU STAIR #2
A305 (STAIR #1 SIMILAR & OPPOSITE) SCALE 1:25

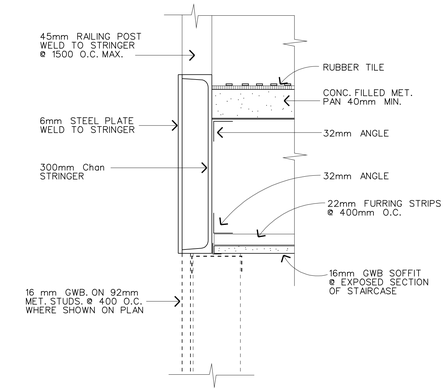


9 STAIR DETAIL
A305 SCALE NONE

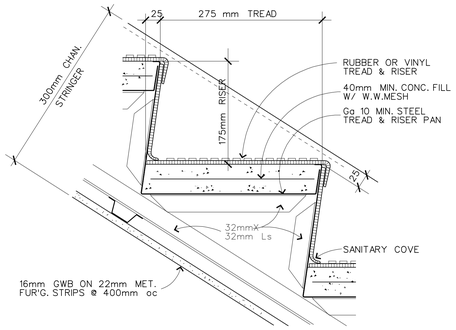


10 TREAD AND RISER
A305 SCALE NONE

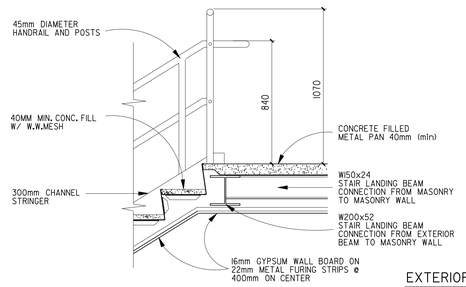


6 STAIR DETAIL (TYPICAL)
A305 SCALE NONE

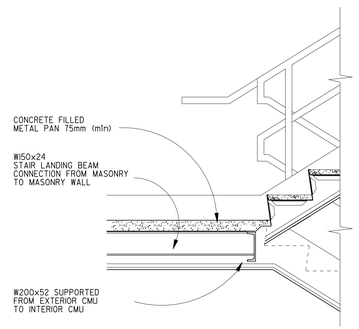


7 STAIR AND LANDING DETAIL
A305 SCALE NONE

EXTERIOR STAIR NOTES:

1. ALL EXIST GRADES SHALL BE VERIFIED IN FIELD PRIOR TO FURNISHING SHOP DWGS. SEE CIVIL DWGS FOR ALL FINISHED GRADES, ETC. TO DETERMINE THE EXACT NUMBER OF TREADS AND RISERS REQUIRED. RISERS ON EACH STAIRCASE SHALL BE EQUAL WITH A 125 Min, 175 Max. HEIGHT.

2. SLOPE ALL PLATFORMS & TREADS AWAY FROM BLDG LINE FOR DRAINAGE (SEE CIVIL)

3. 45mm O.D. HANDRAILS & POSTS W/25mm O.D. STAINLESS STEEL PIPE BALUSTRADE AS SHOWN. WELD ALL CONNECTIONS AND GRIND SMOOTH.

4. ALL EXTERIOR RAILINGS AND HANDRAILS SHALL BE SATIN FIN STAINLESS STEEL (TYP).

5. EXTERIOR CONCRETE STAIR NOSING SHALL BE 75 WIDE EXTRUDED ALUMINUM BASE WITH INTEGRAL CONTINUOUS EXTRUDED ANCHOR WITH ALUMINUM OXIDE FILLER STRIPS.

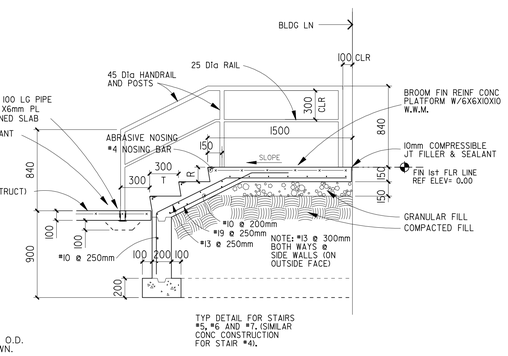


11 EXTERIOR STAIR SECTION
A101 A305 SCALE NONE

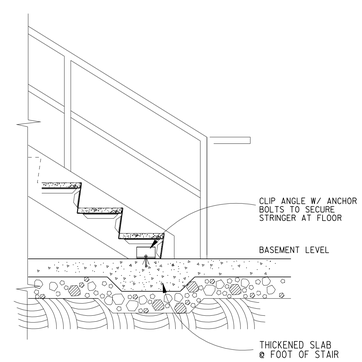


8 STAIR AND SLAB DETAIL (TYPICAL)
A305 SCALE NONE

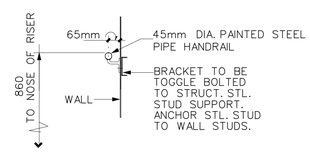


12 WALL BRACKET (TYPICAL)
A305 SCALE NONE

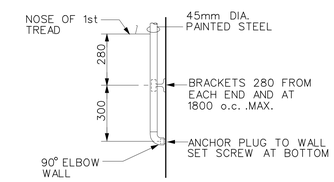


13 WALL RETURN (TYPICAL)
A305 SCALE NONE

US Army Corps of Engineers
New York District

| Symbol | Description | Date | Appr. |
|---|---|---|---|

U.S. ARMY ENGINEER DISTRICT
CORPS OF ENGINEERS
NEW YORK, NEW YORK

Designed by: | Date: | Size: | Rev:
Dwn by: | Ckd by: | Drawing file no.: | Drawing code:
Reviewed by: | Per date: 05-JAN-2005 16:25 | Plot by: c:\bpc\bpc | Date: 10/06/2004
Submitted by: | File name: S:\Hanover\Hdqs\Fort Hamilton\Bldg\Architectural\A305a_A305.dgn

PN. 52224
MILITARY POLICE STATION
FORT HAMILTON, NY

# STAIR DETAILS

Sheet reference number:
A–305

Submitted by: e2ecufeb
perforcedatatilde:pw:d:\hamilton\pf52224c-ft hamilton\dgn\52224c-ft hamilton\dgn\a305.dgn
Plot Date: 05-JAN-2005 16:25

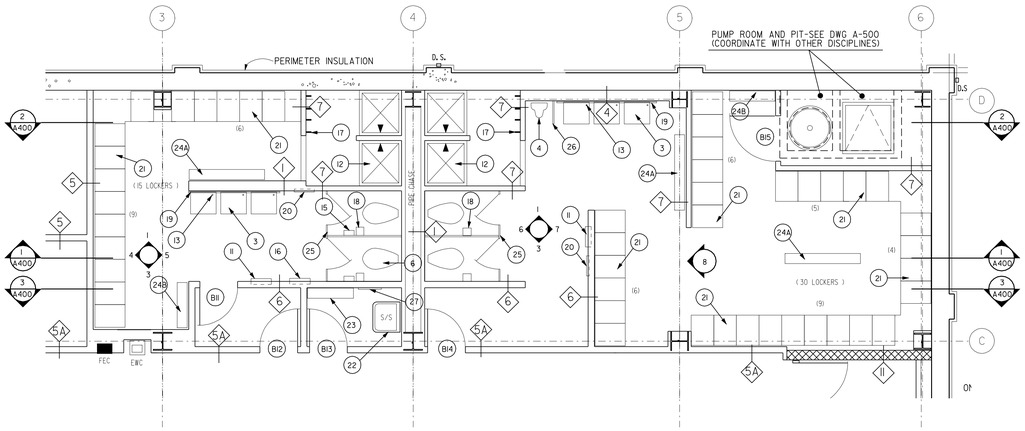


A WOMENS LOCKER RM B08 & TOILET RM B08A
MENS LOCKER RM B15 & TOILET RM B15A
A100 A400 SCALE: 1 : 50

## LEGEND

| | |
|---|---|
| | GYPSUM BOARD & METAL STUD WALL |
| | CMU WALL |
| 3 | NEW DOOR & DOOR NUMBER |
| 7 5 8 6 7 | INTERIOR ELEVATION MARKER |
| A | WALL PARTITION TYPE (DWG. A-503) |
| 6 D | COLUMN GRID INDICATOR |
| | REINFORCED CONCRETE WALL |
| | COLUMN |
| 24 | BATHROOM ACCESSORY INDICATOR |

## SCHEDULE FOR TOILET ROOM ACCESSORIES

| | ABBV. | ACCESSORIES | TOTAL QTY. |
|---|---|---|---|
| 1 | BH | BUMPER HOOK | 13 |
| 2 | LH | LAVATORY HANDICAPPED | 3 |
| 3 | L | LAVATORY | 12 |
| 4 | U | URINAL | 3 |
| 5 | UH | URINAL HANDICAPPED | N/A |
| 6 | WC | WATER CLOSET | 10 |
| 7 | WCH | WATER CLOSET HANDICAPPED | 3 |
| 8 | GB | GRAB BAR | 6 |
| 9 | PTDHC | PAPER TOWEL DISPENSER/RECEPTOR HANDICAPPED | 3 |
| 10 | PTD | PAPER TOWEL DISPENSER | N/A |
| 11 | PTDWR | PAPER TOWEL DISPENSER/WASTE RECEPTOR | 4 |
| 12 | SHO | SHOWER | 4 |
| 13 | SD | SOAP DISPENSER (DECK MOUNTED) | 12 |
| 14 | SDH | SOAP DISPENSER HANDICAPPED (DECK MOUNTED) | 3 |
| 15 | SND | SANITARY NAPKIN DISPOSAL | 7 |
| 16 | SNTD | SANITARY NAPKIN & TAMPON DISPENSER | 4 |
| 17 | TP | TOWEL PIN | 8 |
| 18 | TTD | TOILET TISSUE DISPENSER | 13 |
| 19 | MG | MIRROR GLASS | 7 |
| 20 | TSCD | TOILET SEAT COVER DISPENSER | 7 |
| 21 | —— | LOCKERS W/ SLOPED TOP | 45 |
| 22 | SS | SERVICE SINK | 3 |
| 23 | SMHD | SHELF, METAL, HEAVY DUTY | 6 |
| 24A | —— | BENCH, 300W X 1500L | 3 |
| 24B | —— | BENCH, 300W X 900L | 2 |
| 25 | —— | TOILET PARTITION | —— |
| 26 | —— | URINAL PARTITION | 4 |
| 27 | —— | MOP RACK | 3 |

NOTES: ♿ DENOTES HANDICAPPED REQUIREMENT

1. FOR WALL & FLOOR TILE PATTERNS AND ADDITIONAL INFO.

1 0 1 2 m
SCALE: 1:50

ALL DIMENSIONS ARE SHOWN IN MILLIMETERS.

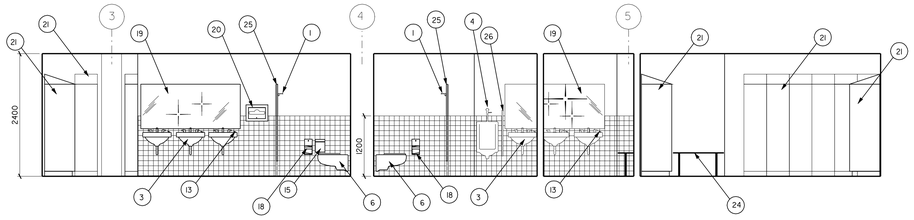


1 ELEVATION
SCALE: 1 : 50

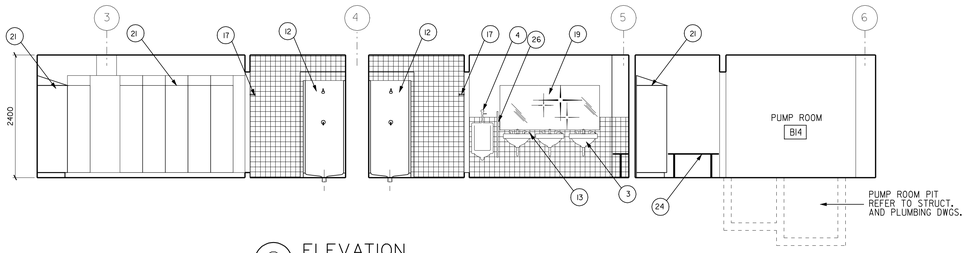


2 ELEVATION
SCALE: 1 : 50

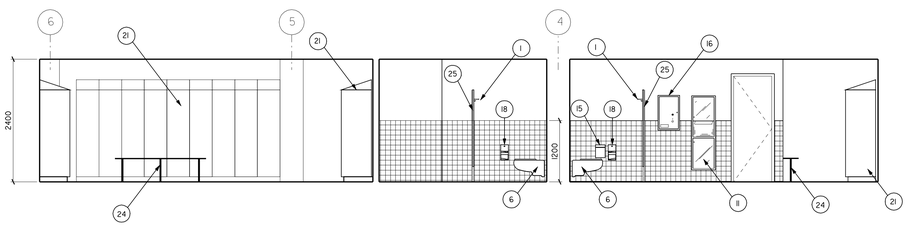


3 ELEVATION
SCALE: 1 : 50

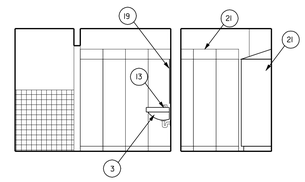

4 ELEVATION
SCALE: 1 : 50

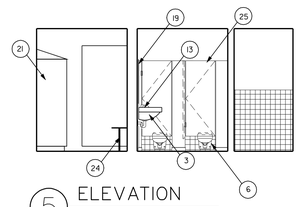

5 ELEVATION
SCALE: 1 : 50

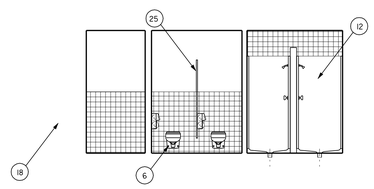

6 ELEVATION
SCALE: 1 : 50

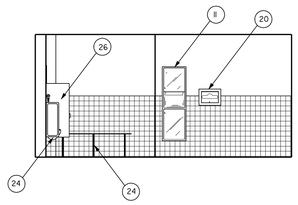

7 ELEVATION
SCALE: 1 : 50

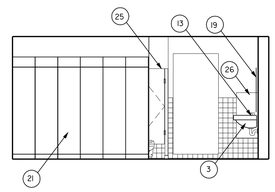

8 ELEVATION
SCALE: 1 : 50

NOTE: ALL DIMENSIONS SHOWN ARE IN MILLIMETERS.

US Army Corps of Engineers
New York District

| Symbol | Description | Date | Appr. |
|---|---|---|---|

U.S. ARMY ENGINEER DISTRICT
CORPS OF ENGINEERS
NEW YORK, NEW YORK

Designed by: | Date: | Size: | Rev.
Dwn by: | Ckd by: | Drawing file no.:
Reviewed by: | Drawing code:
Submitted by: | Plot date: 05-JAN-2006 16:08 | Plot by: eSendTab | Style: CTB-FS2000-000000
File name: S:\Newcom\military\Fort Hamilton\MPPs\Architecture\MPPs A-400.dgn

MILITARY POLICE STATION
FORT HAMILTON, NY
PN 52224

# TOILET ROOM PLANS, ELEVATIONS, & ACCESSORIES

Sheet reference number:
A–400

Submitted by: eSendTab
Plot Date: 05-JAN-2006 16:28
Settings: C:\Bentley\Projects\Hamilton\wpdgn\pdf\architecture\pdf\A-400.cfg

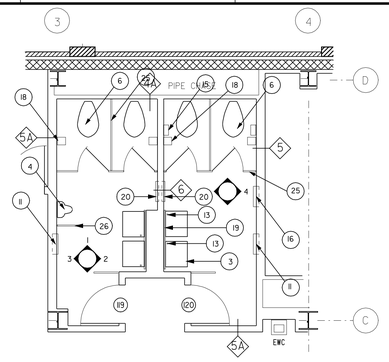


A
A101 A401
MENS TOILET RM 114
WOMENS TOILET RM 115
SCALE: 1:50

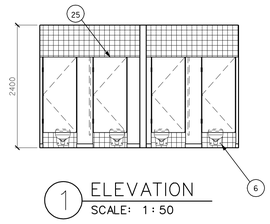


1 ELEVATION
SCALE: 1:50

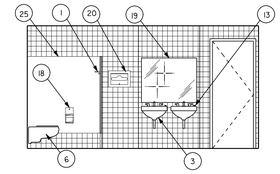

2 ELEVATION
SCALE: 1:50

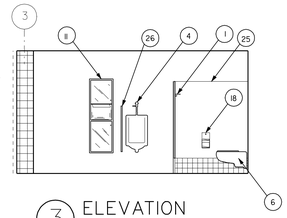

3 ELEVATION
SCALE: 1:50

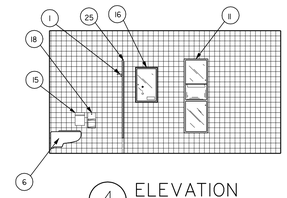

4 ELEVATION
SCALE: 1:50

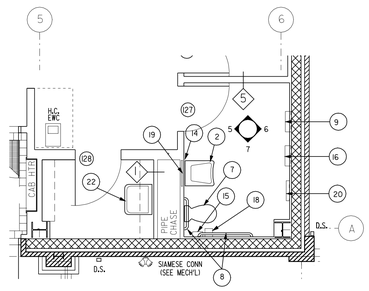


B
A101 A401
UNISEX HC. TOILET RM 103
SCALE: 1:50

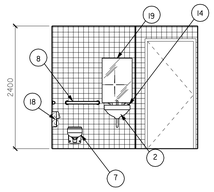


5 ELEVATION
SCALE: 1:50

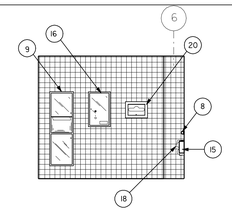

6 ELEVATION
SCALE: 1:50

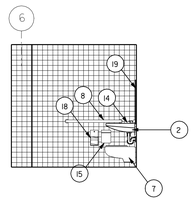

7 ELEVATION
SCALE: 1:50

| LEGEND | |
|---|---|
| | GYPSUM BOARD & METAL STUD WALL |
| | CMU WALL |
| 3 | NEW DOOR & DOOR NUMBER |
| 7 5 8 6 | INTERIOR ELEVATION MARKER |
| A | WALL PARTITION TYPE (DWG. A-503) |
| 6 D | COLUMN GRID INDICATOR |
| | REINFORCED CONCRETE WALL |
| | COLUMN |
| 24 | BATHROOM ACCESSORY INDICATOR |

## SCHEDULE FOR TOILET ROOM ACCESSORIES

| | ABBV. | ACCESSORIES | TOTAL QTY. |
|---|---|---|---|
| 1 | BH | BUMPER HOOK | 13 |
| 2 | LH | LAVATORY HANDICAPPED | 3 |
| 3 | L | LAVATORY | 12 |
| 4 | U | URINAL | 3 |
| 5 | UH | URINAL HANDICAPPED | N/A |
| 6 | WC | WATER CLOSET | 10 |
| 7 | WCH | WATER CLOSET HANDICAPPED | 3 |
| 8 | GB | GRAB BAR | 6 |
| 9 | PTDHC | PAPER TOWEL DISPENSER/RECEPTOR HANDICAPPED | 3 |
| 10 | PTD | PAPER TOWEL DISPENSER | N/A |
| 11 | PTDWR | PAPER TOWEL DISPENSER/WASTE RECEPTOR | 4 |
| 12 | SHO | SHOWER | 4 |
| 13 | SD | SOAP DISPENSER (DECK MOUNTED) | 12 |
| 14 | SDH | SOAP DISPENSER HANDICAPPED (DECK MOUNTED) | 3 |
| 15 | SND | SANITARY NAPKIN DISPOSAL | 7 |
| 16 | SNTD | SANITARY NAPKIN & TAMPON DISPENSER | 4 |
| 17 | TP | TOWEL PIN | 8 |
| 18 | TTD | TOILET TISSUE DISPENSER | 13 |
| 19 | MG | MIRROR GLASS | 7 |
| 20 | TSCD | TOILET SEAT COVER DISPENSER | 7 |
| 21 | —— | LOCKERS W/ SLOPED TOP | 45 |
| 22 | SS | SERVICE SINK | 3 |
| 23 | SMHD | SHELF, METAL, HEAVY DUTY | 6 |
| 24A | —— | BENCH, 300W X 1500L | 3 |
| 24B | —— | BENCH, 300W X 900L | 2 |
| 25 | —— | TOILET PARTITION | —— |
| 26 | —— | URINAL PARTITION | 4 |
| 27 | —— | MOP RACK | 3 |

NOTES: ♿ DENOTES HANDICAPPED REQUIREMENT

1. FOR WALL & FLOOR TILE PATTERNS AND ADDITIONAL INFO.

1 0 1 2 m
SCALE: 1:50

ALL DIMENSIONS ARE SHOWN IN MILLIMETERS.

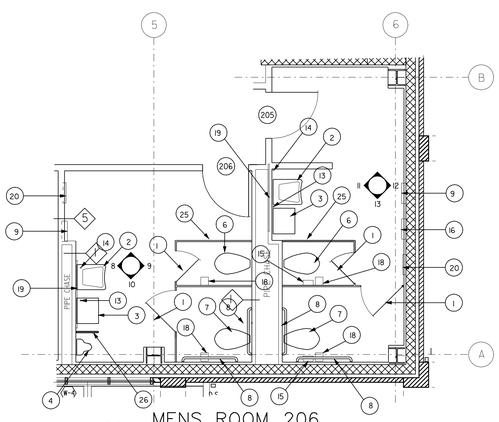


C
A102 A401
MENS ROOM 206
WOMENS ROOM 205
SCALE: 1:50

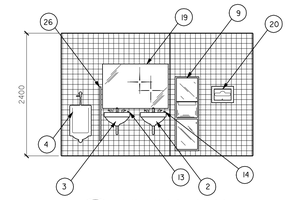


8 ELEVATION
SCALE: 1:50

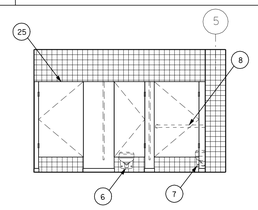

9 ELEVATION
SCALE: 1:50

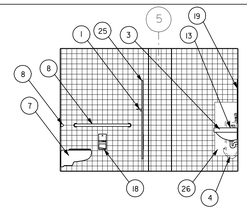

10 ELEVATION
SCALE: 1:50

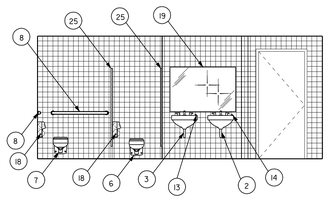

11 ELEVATION
SCALE: 1:50

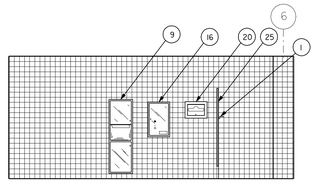

12 ELEVATION
SCALE: 1:50

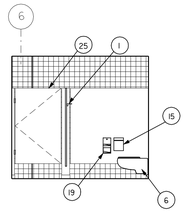

13 ELEVATION
SCALE: 1:50

NOTE: ALL DIMENSIONS SHOWN ARE IN MILLIMETERS.

US Army Corps of Engineers
New York District

| Symbol | Description | Date | Appr. |
|---|---|---|---|

U.S. ARMY ENGINEER DISTRICT
CORPS OF ENGINEERS
NEW YORK, NEW YORK

Designed by: | Date: | Size: | Rev:
Dwn by: | Ckd by: | Drawing file no.:
Reviewed by: | Drawing code:
Submitted by: | Plot date: 05-JAN-2005 16:26 | Plot by: ekpardee | Date: 07/29/2004 | 0000000

File name: S:\divcom\military\ft wainwright\military\architectural\a401p_a-401.dgn

PN. 52224
MILITARY POLICE STATION
FORT HAMILTON, NY

# TOILET ROOM PLANS, ELEVATIONS, & ACCESSORIES

Sheet reference number:
A–401

Submitted by: e2kmdfwb
Plot Date: 05-JAN-2005 16:26
pentlocadmin\dgn\f41 wainwrightMPS\sdd\architectural\a401p_a-401.dgn

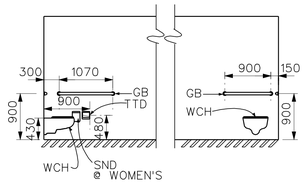


TYP. HANDICAP'D STALL ELEV.

SCALE: 1:50

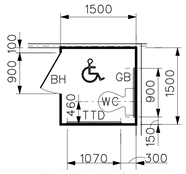


HC TOILET STALL (TYP)

SCALE: 1:50

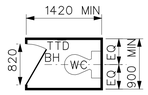


TOILET STALL (TYP)

SCALE: 1:50

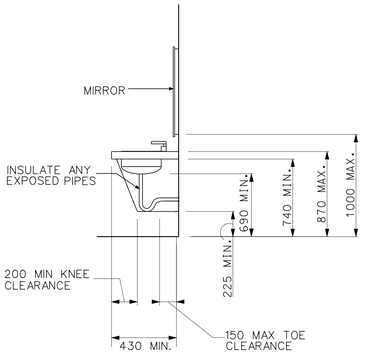


LAVATORY CLEARANCES

SCALE: 1:20

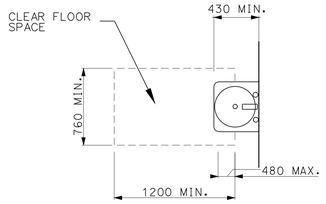


CLEAR FLOOR SPACE @ LAVATORIES

SCALE: 1:20

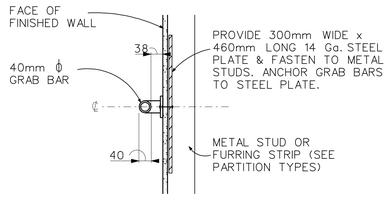


GRAB BAR ANCHORING DETAIL (TYP)

SCALE: NOT TO SCALE

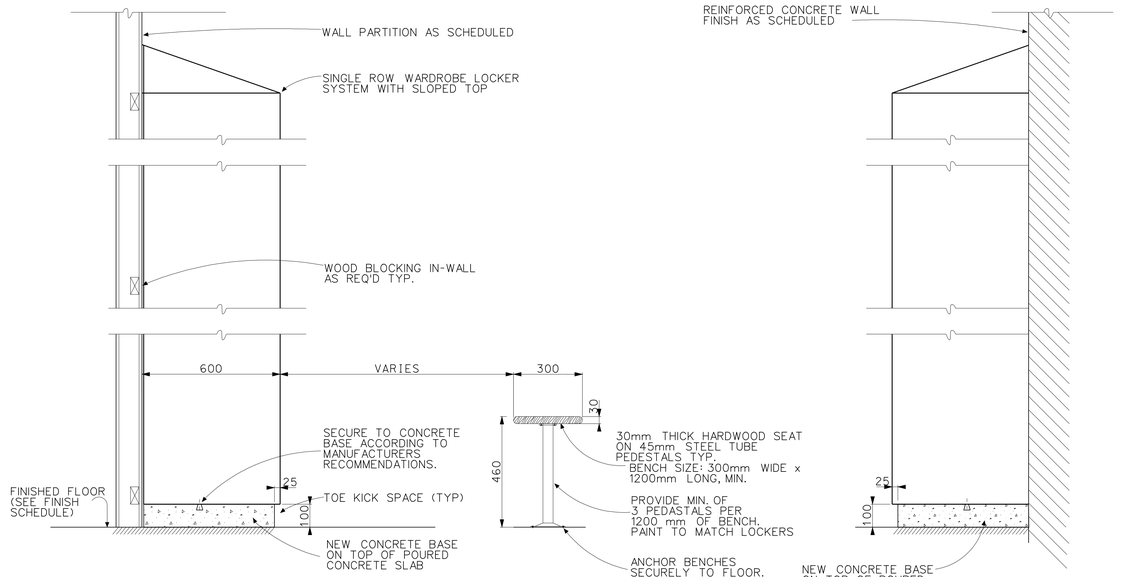


NOTES:

1. PROVIDE FINISHED PANELS @ ALL EXPOSED ENDS OF LOCKERS
2. PROVIDE FINISHED FILLER PIECES AS REQUIRED FOR CONTINUOUS FLUSH RUNS, TYP.

TYPICAL LOCKER & BENCH SECTION

SCALE: NOT TO SCALE

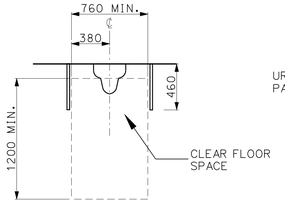


CLEAR FLOOR SPACE @ HC URINAL

SCALE: 1:20

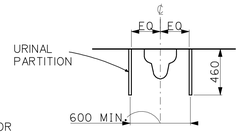


CLEAR FLOOR SPACE @ STANDARD URINAL

SCALE: 1:20

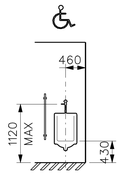


HANDICAPPED URINAL MOUNTING HEIGHT (TYP)

SCALE: 1:50

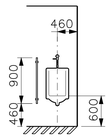


STANDARD URINAL MOUNTING HEIGHT (TYP)

SCALE: 1:50

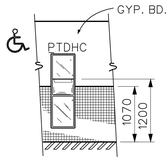


PAPER TOWEL DISPENSER RECEPTOR HANDICAPPED

SCALE: 1:50

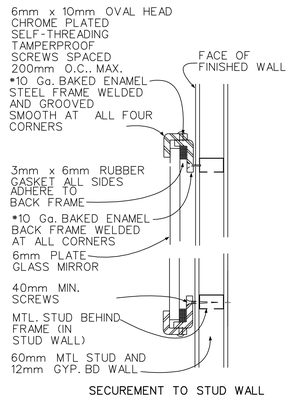


TYP. MIRROR DETAILS

NOT TO SCALE

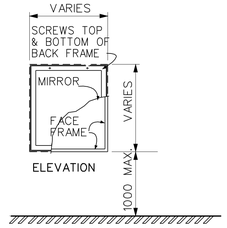


TYP. MIRROR DETAILS

NOT TO SCALE

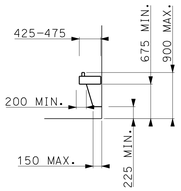


HC WATER COOLER CLEARANCES

SCALE: 1:20

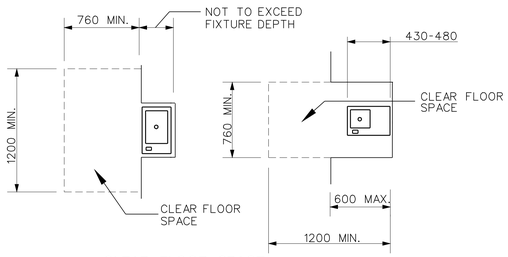


CLEAR FLOOR SPACE @ HC WATER COOLER

SCALE: 1:20

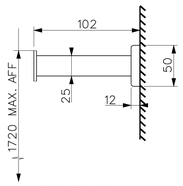


TOWEL PIN

NOT TO SCALE

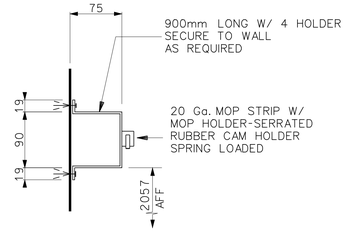


MOP RACK

NOT TO SCALE

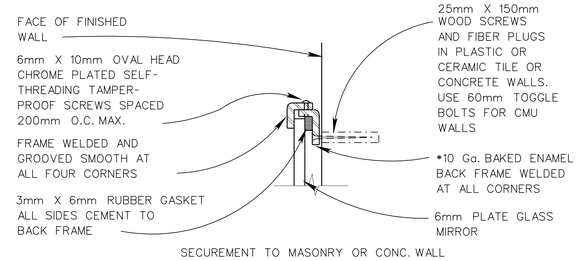


TYP. MIRROR DETAILS

NOT TO SCALE

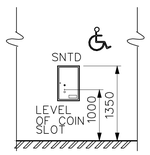


SANITARY NAPKIN TAMPON DISPENSER

SCALE: 1:50

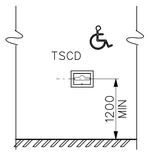


TOILET SEAT COVER DISPENSER

SCALE: 1:50

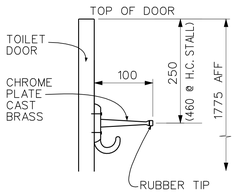


BUMPER HOOK

NOT TO SCALE

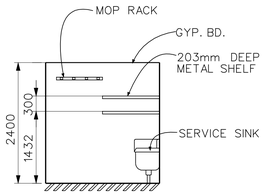


ELEVATION JANITOR'S CLOSET (TYP)

SCALE: 1:50

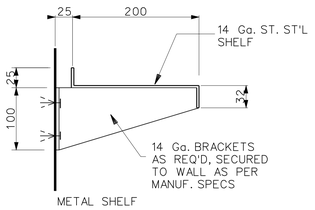


METAL SHELF

NOT TO SCALE

NOTE: ALL DIMENSIONS SHOWN ARE IN MILLIMETERS.

US Army Corps of Engineers
New York District

| Symbol | Description | Date | Appr. |
|---|---|---|---|

| | | | |
|---|---|---|---|
| Designed by: | Date: | Size: | Rev. |
| Dwn by: | Ckd by: | Drawing file no.: | |
| Reviewed by: | | Drawing code: | |
| Submitted by: | | Plot date: 05-JAN-2006 16:06<br>Plot by: dondoe<br>File: c09_f000000000 | |

U.S. ARMY ENGINEER DISTRICT
CORPS OF ENGINEERS
NEW YORK, NEW YORK

File name: S:\Source\military\Fort Hamilton\MPS\Architectural\MPS4_A-402.dgn

MILITARY POLICE STATION
FORT HAMILTON, NY

PN 82224

# TOILET ROOM ACCESSORIES DETAILS

Sheet reference number:

A–402

Submitted by: e3endrab
Sattler-dawnhilton-yefet : Hamilton-MPS:Hdar-architecture-MPS4.dgn
Plot Date: 05-JAN-2006 16:06

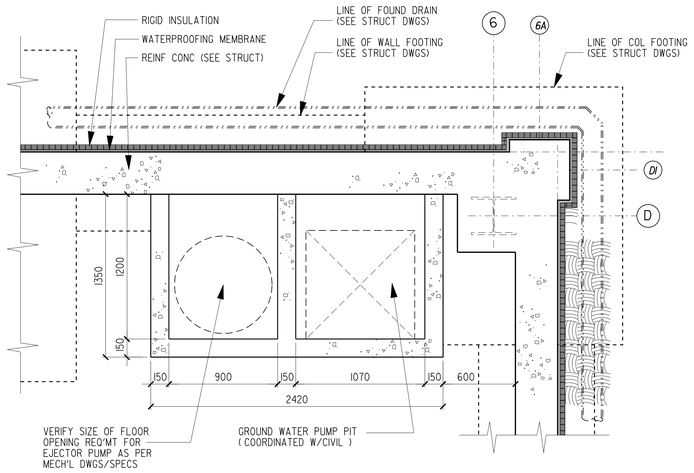


1 A501 PLAN OF PUMP PIT BELOW BSMT LEVEL
SCALE 1 : 10

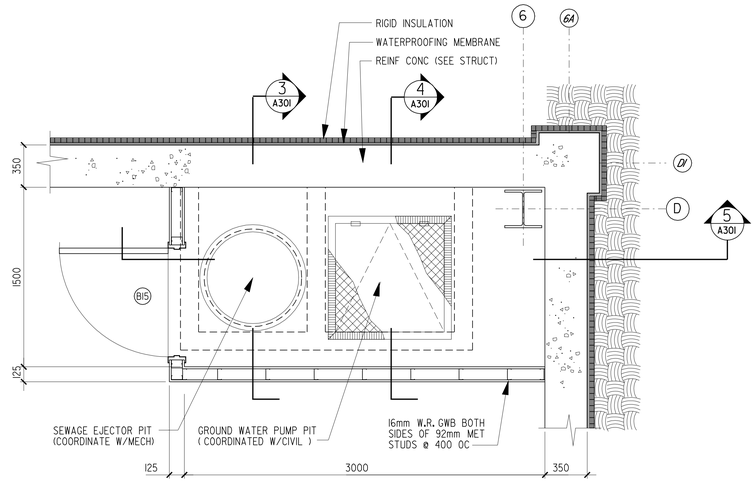


2 A500 PLAN OF PUMP PIT AT BASEMENT LEVEL
SCALE 1 : 10

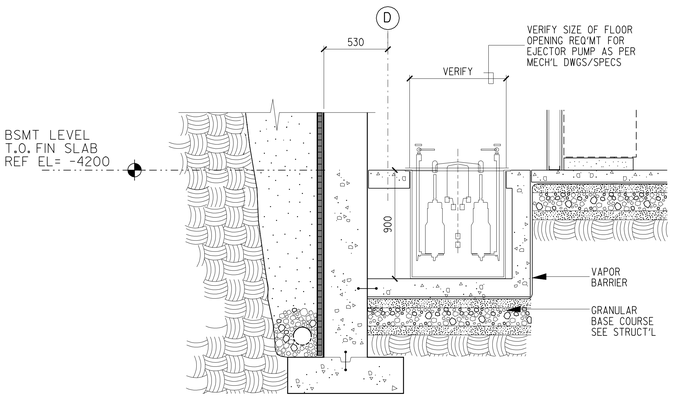


3 A500 SECT THRU SEWAGE EJECTOR PIT
SCALE 1 : 10

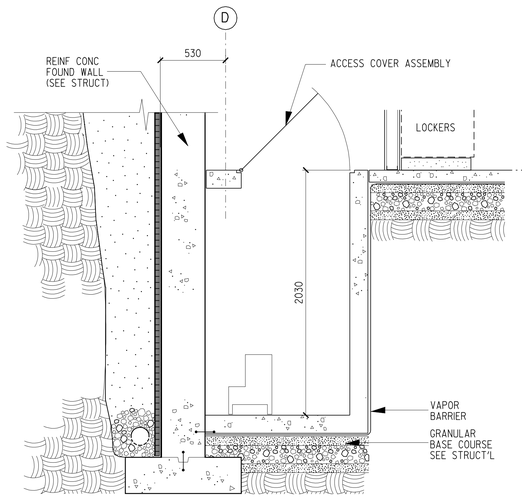


4 A500 SECT THRU GROUND WATER PUMP PIT
SCALE 1 : 10

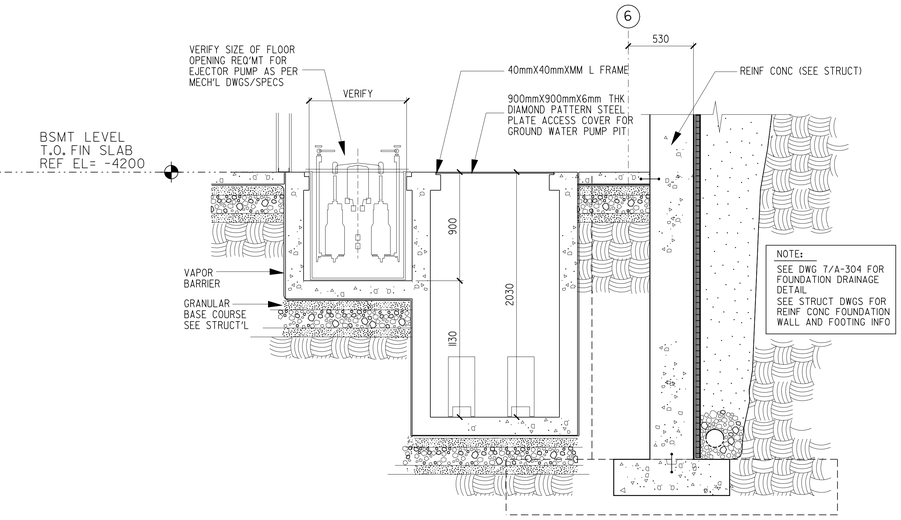


5 A500 SECTION THRU PUMP PIT
SCALE 1 : 10

US Army Corps of Engineers
New York District

| Rev. | Size | Date | Description | Appr. |
|---|---|---|---|---|

U.S. ARMY ENGINEER DISTRICT
CORPS OF ENGINEERS
NEW YORK, NEW YORK

Designed by: | Date: | Size:
Dwn by: | Ckd by: | Drawing file no.:
Reviewed by: | Drawing code:
Submitted by: | Drawing no.: COLUMN DETAILS and MISCELLANEOUS DETAILS
File name: S:\Memory\military\fortHamilton\PN\Architectural\DWGs\A-500.dgn

PN 52224
MILITARY POLICE STATION
FORT HAMILTON, NY

MISCELLANEOUS DETAILS AT BASEMENT LEVEL

Sheet reference number:
A–500

Submitted by: eSendfwb
Plot Date: 05-JAN-2005 16:26
Settler:admin:http:prefer1 hamiltonpdf@Stpdf:architectural:pdf:to 8.5:50.dgn

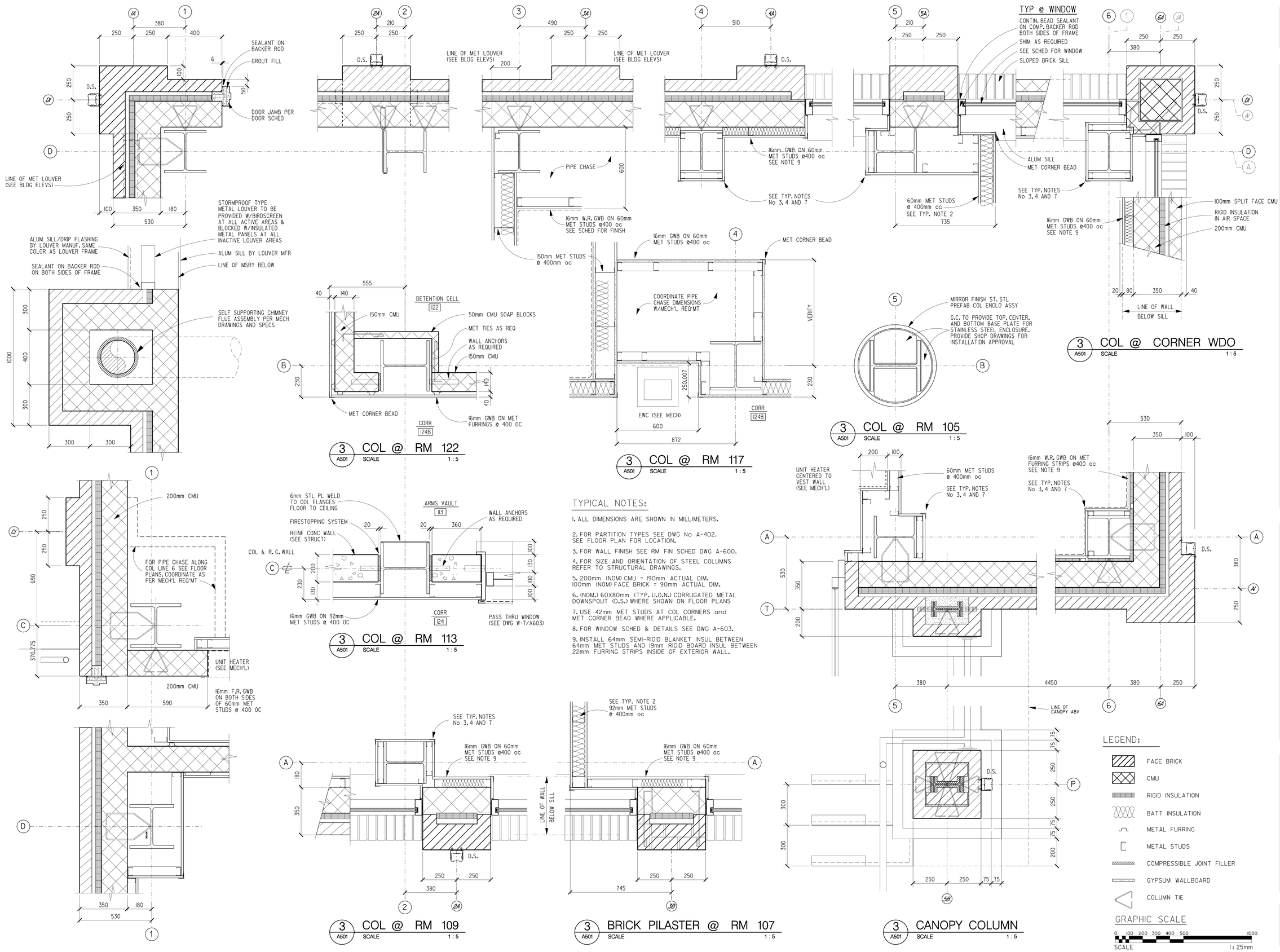


## TYPICAL NOTES:

1. ALL DIMENSIONS ARE SHOWN IN MILLIMETERS.
2. FOR PARTITION TYPES SEE DWG No A-402. SEE FLOOR PLAN FOR LOCATION.
3. FOR WALL FINISH SEE RM FIN SCHED DWG A-600.
4. FOR SIZE AND ORIENTATION OF STEEL COLUMNS REFER TO STRUCTURAL DRAWINGS.
5. 200mm (NOM) CMU = 190mm ACTUAL DIM. 100mm (NOM) FACE BRICK = 90mm ACTUAL DIM.
6. (NOM.) 60X80mm (TYP. U.O.N.) CORRUGATED METAL DOWNSPOUT (D.S.) WHERE SHOWN ON FLOOR PLANS
7. USE 42mm MET STUDS AT COL CORNERS and MET CORNER BEAD WHERE APPLICABLE.
8. FOR WINDOW SCHED & DETAILS SEE DWG A-603.
9. INSTALL 64mm SEMI-RIGID BLANKET INSUL BETWEEN 64mm MET STUDS AND 19mm RIGID BOARD INSUL BETWEEN 22mm FURRING STRIPS INSIDE OF EXTERIOR WALL.

US Army Corps of Engineers New York District

U.S. ARMY ENGINEER DISTRICT CORPS OF ENGINEERS NEW YORK, NEW YORK

Designed by: Date: Size: Rev.
Dwn by: Ckd by: Drawing file no:
Reviewed by: Drawing code:
Submitted by: Plot date: 05-JAN-2005 16:26 Plot by: edenofwa Scale: 3=1,0000000000

File name: S:\Benson\military\fortHamilton\MPDs\architectural\MPDs A-501.dgn

PN 52224 MILITARY POLICE STATION FORT HAMILTON, NY

# COLUMN & MISCELLANEOUS DETAILS AT FIRST FLOOR

Sheet reference number: A-501

Submitted by: edenofwa
Submittal-Identification: Submittal to A-E-Mgr
Plot Dates: 05-JAN-2005 16:26

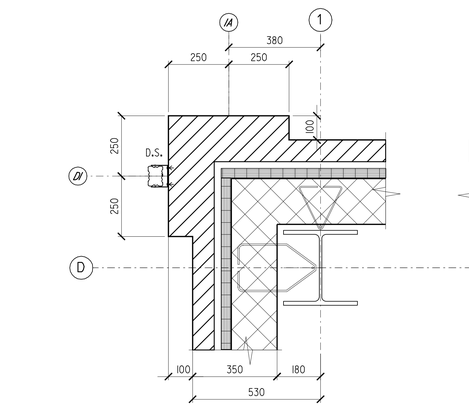


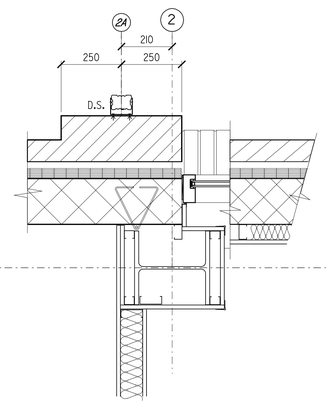


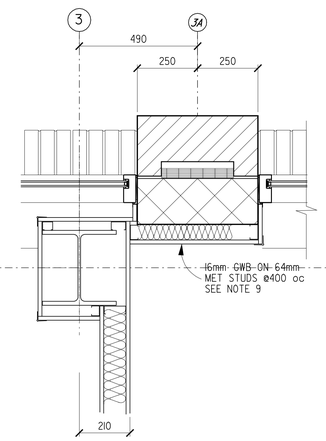


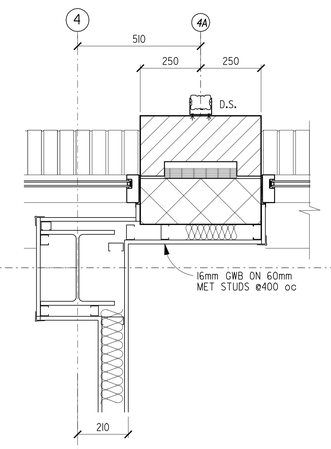


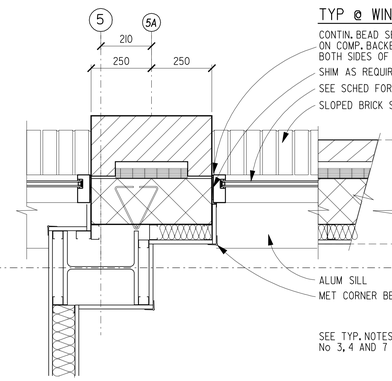


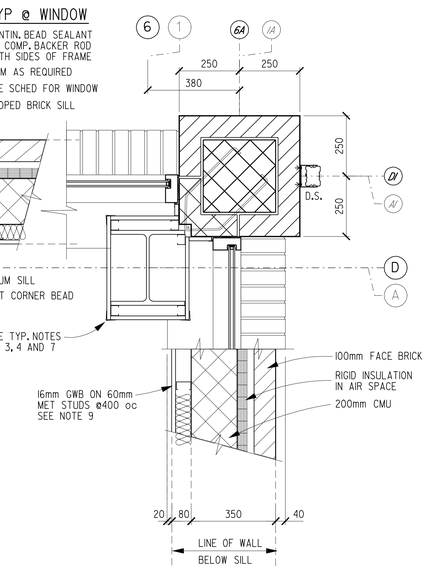


4 A502 COL @ CORNER WDO
SCALE 1 : 5

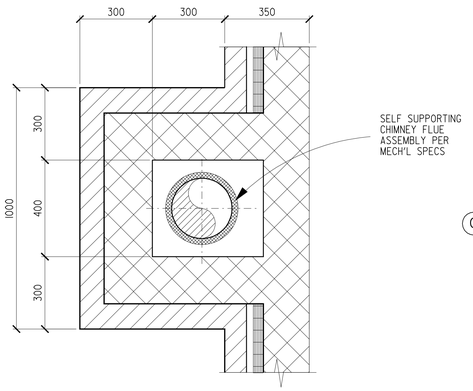


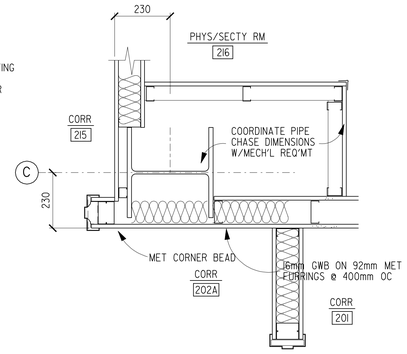


1 A502 COL @ RM 216
SCALE 1 : 5

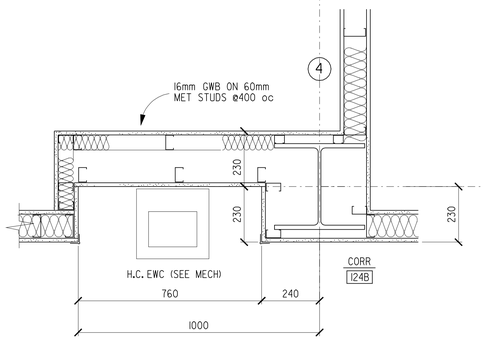


2 A502 COL @ CORR 201
SCALE 1 : 5

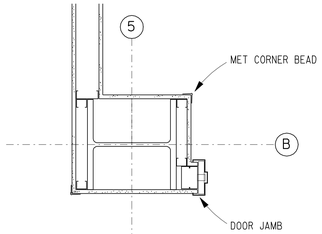


3 A502 COL @ RM 204
SCALE 1 : 5

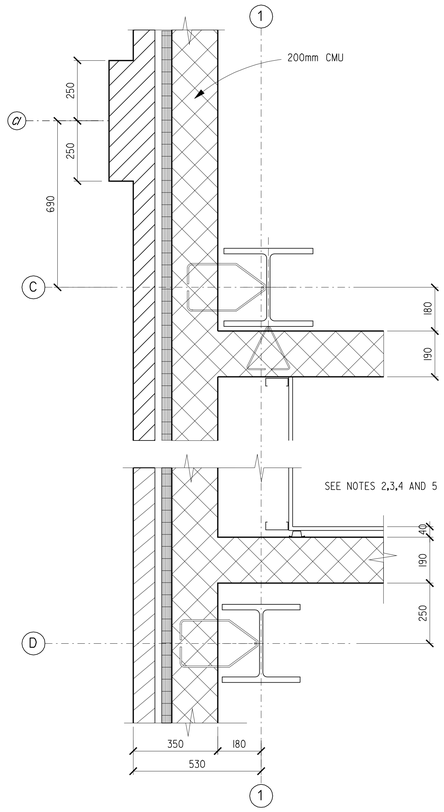


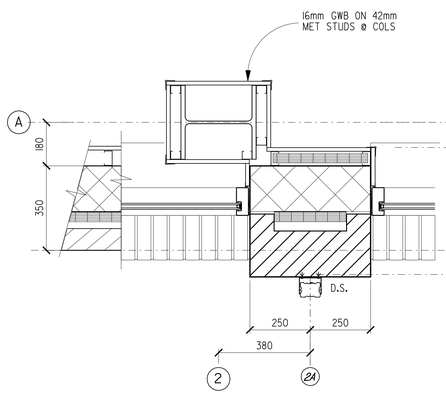


5 A502 COL @ RM 109
SCALE 1 : 5

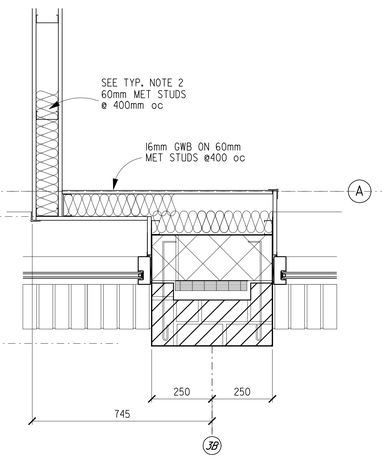


6 A502 BRICK PILASTER @ RM 107
SCALE 1 : 5

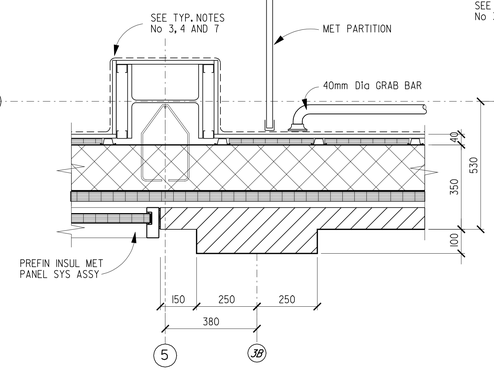


7 A502 COLS @ RMS 206 AND 205
SCALE 1 : 5

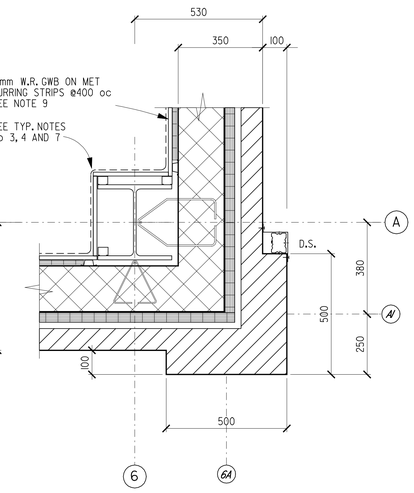


## TYPICAL NOTES:

1. ALL DIMENSIONS ARE SHOWN IN MILLIMETERS.
2. FOR PARTITION TYPES SEE DWG No A-402.
3. FOR WALL FINISH SEE RM FIN SCHED DWG A-600.
4. FOR SIZE AND ORIENTATION OF STEEL COLUMNS REFER TO STRUCTURAL DRAWINGS.
5. 200mm (NOM) CMU = 190mm ACTUAL DIM. 100mm (NOM) FACE BRICK = 90mm ACTUAL DIM.
6. (NOM.) 60X80mm (TYP. U.O.N.) CORRUGATED METAL DOWNSPOUT (D.S.) WHERE SHOWN ON FLOOR PLANS
7. USE 42mm MET STUDS AT COL CORNERS and MET CORNER BEAD WHERE APPLICABLE.
8. FOR WINDOW SCHED & DETAILS SEE DWG A-603.
9. INSTALL 64mm SEMI-RIGID BLANKET INSUL BETWEEN 64mm MET STUDS AND 19mm RIGID INSUL BOARD BETWEEN 22mm FURRING STRIPS INSIDE OF EXTERIOR WALL.

## LEGEND:

- FACE BRICK
- CMU
- RIGID INSULATION
- BATT INSULATION
- METAL FURRING
- METAL STUDS
- COMPRESSIBLE JOINT FILLER
- GYPSUM WALLBOARD
- COLUMN TIE

GRAPHIC SCALE
0 100 200 300 400 500 1000
SCALE 1 : 25mm

US Army Corps of Engineers
New York District

| Symbol | Description | Date | Appr. |
|---|---|---|---|

| Rev. | Size | Date: | Drawing file no: | Drawing code: | Plot date: 05-JAN-2005 16:26 | Plot by: eSendwa | Status: 35-A0000000000 |
|---|---|---|---|---|---|---|---|

Designed by: | Dwn by: | Ckd by: | Reviewed by: | Submitted by:

U.S. ARMY ENGINEER DISTRICT
CORPS OF ENGINEERS
NEW YORK, NEW YORK

File name: S:\Services\Military\FactHamilton\MPPs\Architectural\MPPs_A-502.dgn

PN 52224
MILITARY POLICE STATION
FORT HAMILTON, NY

# COLUMN & MISCELLANEOUS DETAILS AT SECOND FLOOR

Sheet reference number:
A–502

Submitted by: eSendwa
Partitioned by: eSendwa
Plot Date: 05-JAN-2005 16:26
Partitioned by: eSendwa

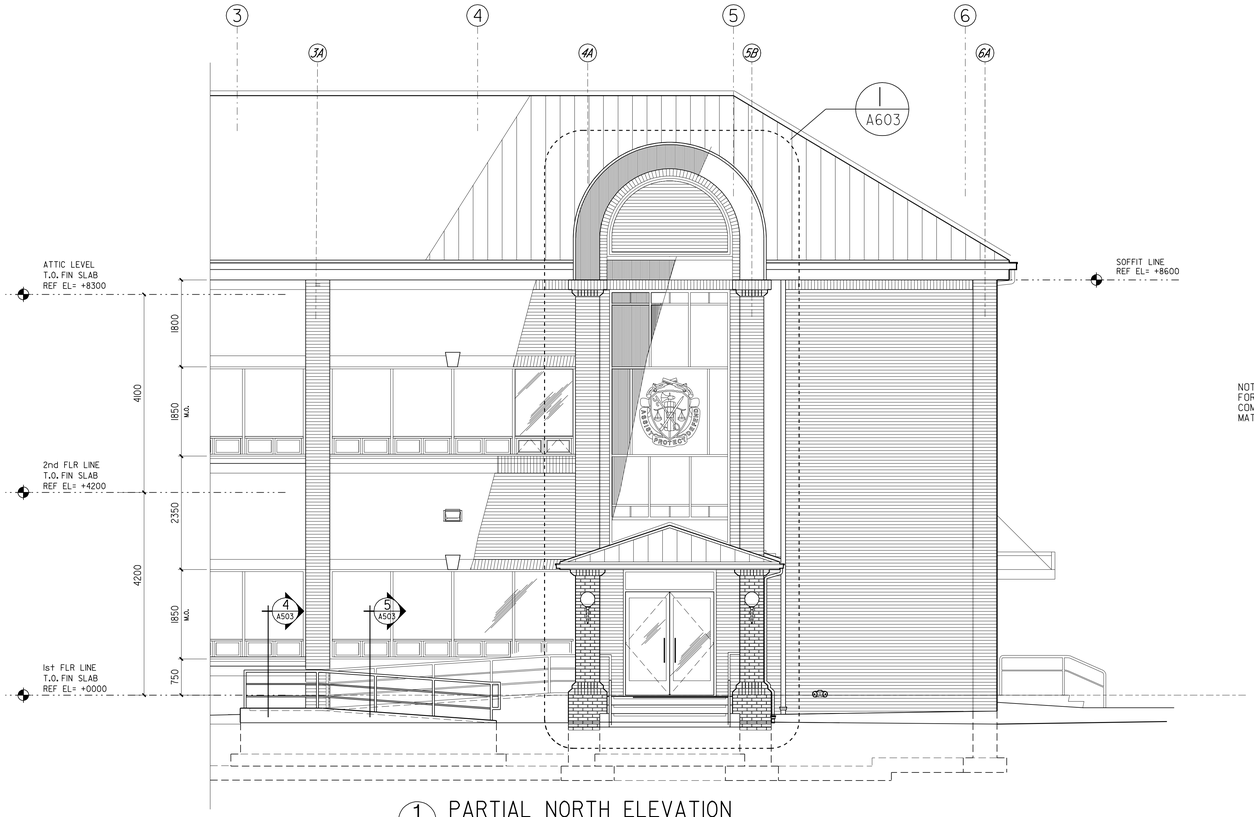


1 PARTIAL NORTH ELEVATION
A200 A503 SCALE 1:20

NOTE:
FOR EXTERIOR BLDG MATERIALS, SEE COMPLETE BLDG ELEVATIONS AND MATERIAL LEGEND ON DWG NO. A-200

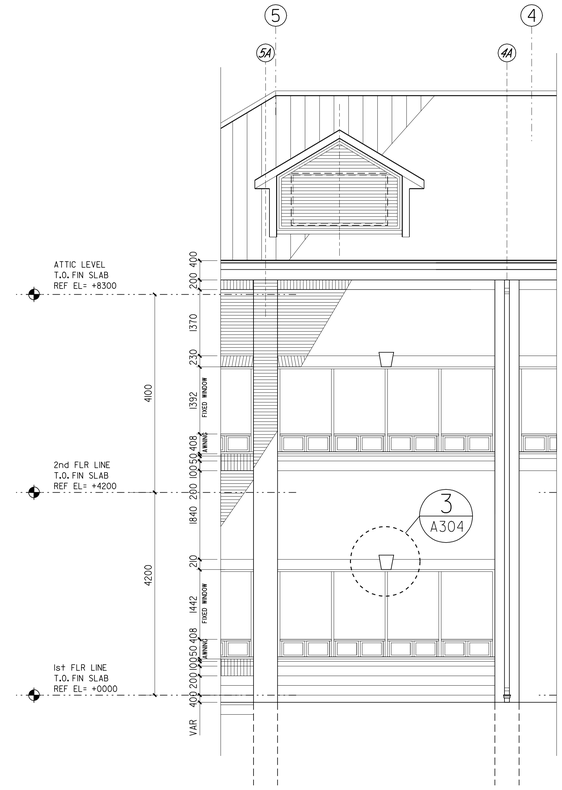


2 PARTIAL SOUTH ELEVATION
A200 A503 SCALE 1:20

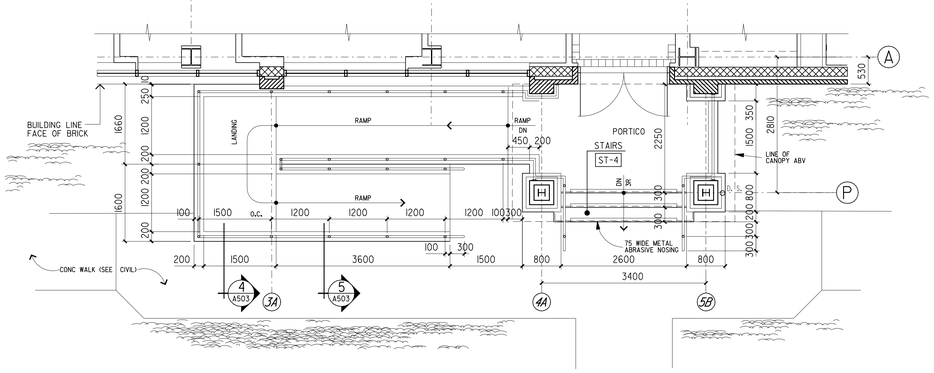


3 PARTIAL PLAN @ RAMP/PORTICO
A101 A503 SCALE 1:20

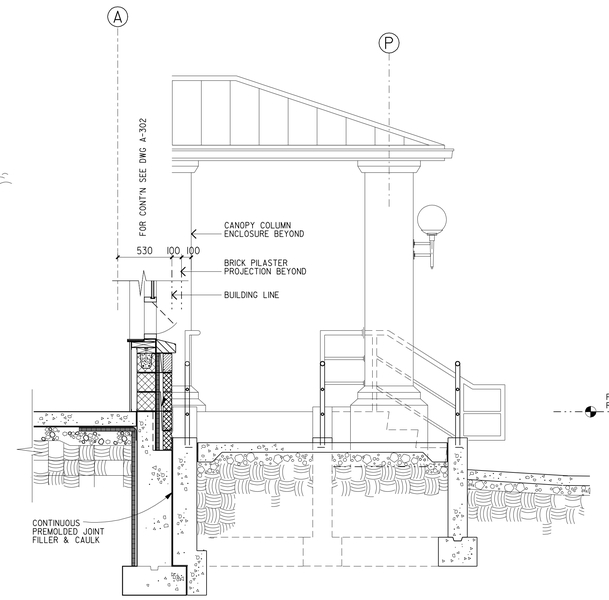


4 CROSS SECTION @ RAMP LANDING
A503 A503 SCALE 1:10

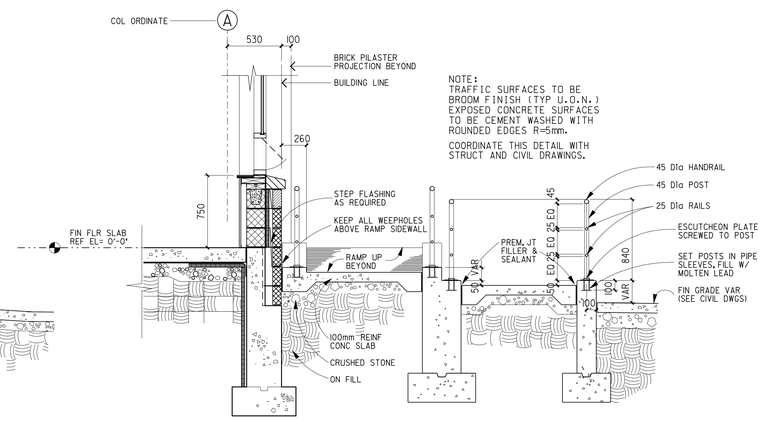


NOTE:
TRAFFIC SURFACES TO BE BROOM FINISH (TYP U.O.N.)
EXPOSED CONCRETE SURFACES TO BE CEMENT WASHED WITH ROUNDED EDGES R=5mm.

COORDINATE THIS DETAIL WITH STRUCT AND CIVIL DRAWINGS.

TYP RAILING @ RAMP

5 CROSS SECTION @ RAMP
A503 A503 SCALE 1:10

NOTE: ALL DIMENSIONS SHOWN ARE IN MILLIMETERS.

US Army Corps of Engineers
New York District

| Symbol | Description | Date | Appr. |
|---|---|---|---|

Designed by:
Date:
Size:
Rev:
Dwn by:
Ckd by:
Drawing file no.:
Drawing code:
Reviewed by:
Pltd date: 05-JUN-2005 16:26
Pltd by: e.bendtsen
Scale: 1:20/1:10/1:50/1:100
Submitted by:
File name: S:\Division\Military\Fort Hamilton\MPS\Architectural\MPS_A-503.dgn

U.S. ARMY ENGINEER DISTRICT
CORPS OF ENGINEERS
NEW YORK, NEW YORK

PN 82224
MILITARY POLICE STATION
FORT HAMILTON, NY

RAMP AND PORTICO DETAILS

Sheet reference number:
A–503

Submitted by: e.bendtsen
pdf:nt=cadd:lib/pf01 i:\mhi\tenant\PS\cad\architecture\MPS\A-503.dgn
Plot Date: 05-JUN-2005 16:26

# PARTITION TYPES

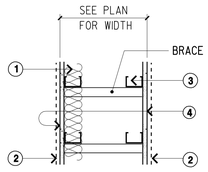


TYPE 1 PIPE CHASE

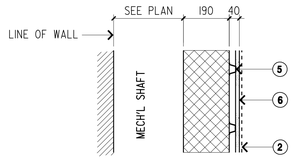


TYPE 2 PIPE CHASE

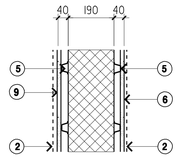


TYPE 3

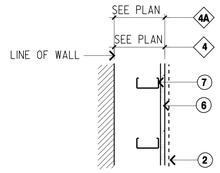


TYPE 4 PIPE CHASE

TYPE 4A PIPE CHASE

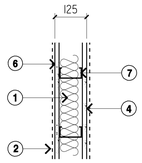


TYPE 5 GWB PARTITION

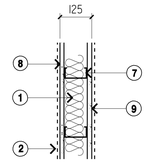


TYPE 5A 1-HR FIRE RATED GWB PARTITION

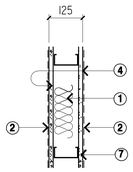


TYPE 6 W.R. GWB PARTITION

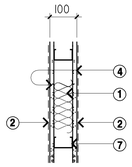


TYPE 7 W.R. GWB PARTITION

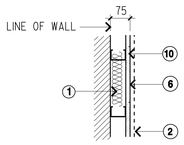


TYPE 8

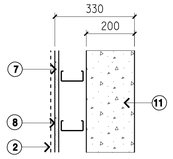


TYPE 9

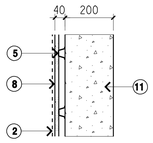


TYPE 10

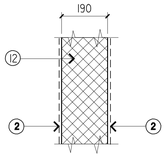


TYPE 11 CMU PARTITION
TYP. (U.O.N.)

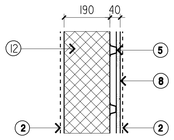


TYPE 12 CMU PARTITION

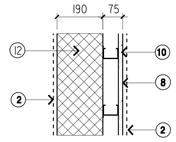


TYPE 13 CMU PARTITION

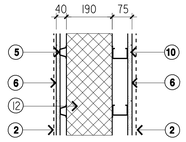


TYPE 14 CMU PARTITION

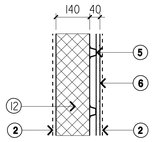


TYPE 15 CMU PARTITION

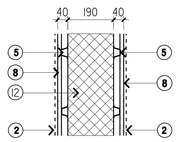


TYPE 16 CMU PARTITION

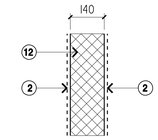


TYPE 17 CMU PARTITION

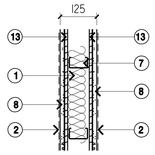


TYPE 18 BULLET RESISTENT PARTITION

## MATERIAL LEGEND

1. SOUND ATTENUATION BLANKETS
2. SEE FINISH SCHEDULE FOR ROOM FINISH
3. 62mm METAL STUD @ 400mm O.C.
4. ONE LAYER OF 16mm CEMENTITIOUS BACKER BOARD (TYP @ WET AREAS ONLY)
5. 22mm METAL FURRING CHANNELS @ 400mm O.C.
6. ONE LAYER OF 16mm STANDARD GWB (TYP @ DRY AREAS)
7. 92mm METAL STUD @ 400mm O.C.
8. ONE LAYER 16mm FIRE RATED GWB
9. ONE LAYER 16mm FIRE RATED CEMENTITIOUS BACKER BOARD (@ WET AREA)
10. 60mm METAL STUD @ 400mm O.C.
11. 200mm REINFORCED CONCRETE WALL
12. 150mm OR 200mm CMU
13. 12mm BULLET RESISTENT FIBERGLASS ARMOR PANEL SYSTEM

## PARTITION NOTES

1. REFER TO ROOM FINISH SCHEDULE FOR ALL SCHEDULED FINISHES.
2. REFER TO LIFE SAFETY FLOOR PLANS, FOR LOCATIONS OF FIRE RATED WALLS. FIRE RATED CONSTRUCTION SHALL BE CONTINUOUS AROUND STRUCTURAL MEMBERS, CONTINUOUS FROM FLOOR SLAB TO UNDERSIDE OF STRUCTURE ABOVE AND EXTENDING TO EXTERIOR WALLS. PROVIDE FIRESTOPPING AT HEAD JOINT CONDITIONS.
3. PARTITION TYPES INDICATED ON PLANS CONTINUE ABOVE ADJACENT DOORS AND/OR OPENINGS.
4. INTERIOR DIMENSIONS ARE TO FACE OF GWB FINISH UNLESS OTHERWISE NOTED.
5. MECHANICAL DUCTS AND SIMILAR ITEMS PENETRATING FIRE AND/OR SMOKE RATED WALLS SHALL BE CORRESPONDINGLY RATED AND DUCTS DAMPERED.
6. CABINETS, FIRE EXTINGUISHER CABINETS, ELECTRICAL PANELS, ELECTRICAL DEVICES, LIGHTS AND SIMILAR EQUIPMENT RECESSED INTO FIRE RATED WALLS OR CEILING SHALL INCLUDE FIRE RATED BACKING MATERIAL WITH CORRESPONDING FIRE RESISTIVE CONSTRUCTION TO MAINTAIN THE INTEGRITY OF THE FIRE PROTECTION OF THE FIRE PROTECTION BY THE WALL OR CEILING SYSTEM.
7. VOIDS AND PENETRATIONS THROUGH FLOOR SLABS TO ACCOMMODATE PASSING OF CONDUITS, PIPES AND SIMILAR MATERIALS, EXCEPT THOSE IN FIRE RATED SHAFTS, SHALL BE SEALED WITH FIRESTOPPING TO MAINTAIN FIRE RATING OF FLOOR, CEILING OR ROOF ASSEMBLY.
8. PROVIDE CEMENTITIOUS BACKER UNITS IN SHOWER AREAS.
10. SOUND ATTENUATION BLANKETS ARE OPTIONAL IN DRYWALLS WHERE SOUND TRANSMISSION MAY BE PERMISSIBLE; AS IN PARTITIONS BETWEEN ELECT & MECH RMS, TOILET AND JAN CLO, LOCKERS AND BATTERY RM, THOSE BETWEEN TWO STO RMS, ETC. (VERIFY W/CONTRACTING OFFICER).

EWC

NOTE: ALL DIMENSIONS SHOWN ARE IN MILLIMETERS.

US Army Corps of Engineers
New York District

| Symbol | Description | Date | Appr. |
|---|---|---|---|

U.S. ARMY ENGINEER DISTRICT
CORPS OF ENGINEERS
NEW YORK, NEW YORK

Designed by: | Date: | Size: | Rev.
Dwn by: | Ckd by: | Drawing file no.:
Reviewed by: | Drawing code:
Submitted by: | Plot date: 05-JAN-2005 16:08 | Plot by: eberdwa | Scale: 25x30000/1000000
File name: S:\Benson\military\fortHamilton\MPPs\Architecture\MPPs 1-504.dgn

PN 52224
MILITARY POLICE STATION
FORT HAMILTON, NY

PARTITION TYPES

Sheet reference number:
A-504

Submitted by: eberdwa
Plot Date: 05-JAN-2005 16:28
Settler:bensonhillmurphy@ref: Hamiltonpdf:S:\pdef\architecture\pdf\PN 1-504.dgn

# SUSPENDED CEILING DETAILS

## TYP. LATERAL BRACE REQ'MTS

1. SUSPENDED CEILINGS SHALL BE LATERALLY BRACED. LIGHT FIXTURES AND OTHER CEILING MOUNTED ITEMS SHALL BE INDIVIDUALLY SUSPENDED AND BRACED.
2. PROVIDE SPLAY BRACING (1) EACH PER 13 SQ M OF CEILING 1800mm Max FROM PERIMETER WALLS.
3. EXCEPTIONS:
   A) CEILING AREA OF 13 SQUARE METERS OR LESS AND SURROUNDED BY WALLS WHICH CONNECT DIRECTLY TO THE STRUCTURE ABOVE SHALL BE EXEMPT FROM THE LATERAL LOAD DESIGN REQUIREMENTS OF THESE STANDARDS.
   B) CEILINGS CONSTRUCTED OF GYPSUM BOARD, SCREW ATTACHED TO SUSPENDED MEMBERS THAT SUPPORT A CONTINUOUS GYPSUM BOARD CEILING ON LEVEL AND EXTEND FROM WALL TO WALL.

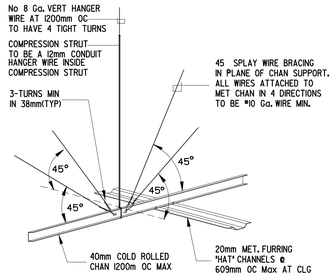


1 A505 GYPSUM BOARD SUSPENDED CLG
SCALE NONE

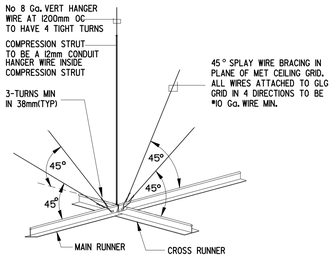


2 A505 ACOUSTICAL TILE SUSPENDED CLG
SCALE NONE

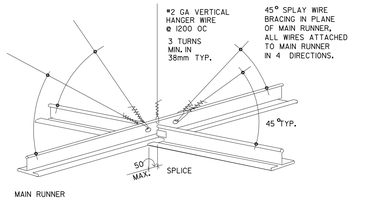


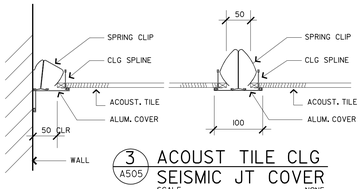


3 A505 ACOUST TILE CLG SEISMIC JT COVER
SCALE NONE

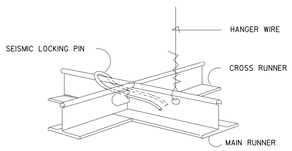


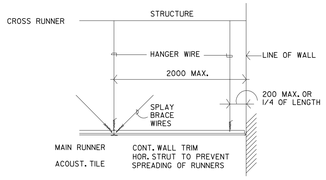


5 A505 ACT. CLG W/SEISMIC SUSPENSION
SCALE NONE

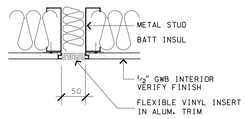


4 A505 GYP BOARD CLG SEISMIC JT COVER
SCALE NONE

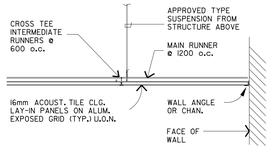


6 A505 TYP. SUSP. ACT CLG
SCALE NONE

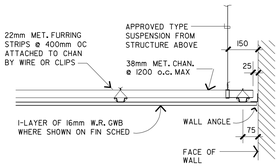


7 A505 TYP. SUSP. GWB CLG
SCALE NONE

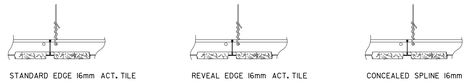


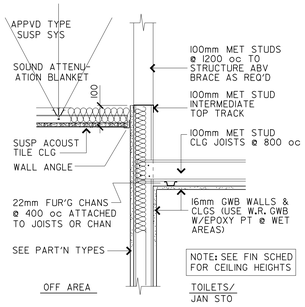


8 A505 CEILING TRANSITION
SCALE NONE

# TYPICAL LATERAL SUPPORT DETAILS

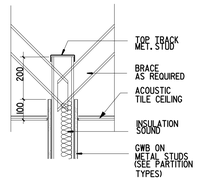


9 A505 LATERAL SUPPORT FOR GWB PARTITION
SCALE NONE

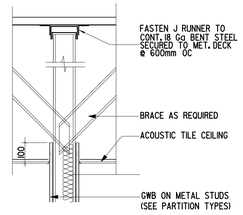


10 A505 LATERAL SUPPORT FOR GWB PARTITION
SCALE NONE

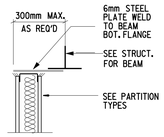


11 A505 LATERAL SUPPORT UNDER STEEL BM
SCALE NONE

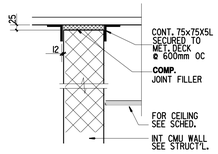


12 A505 LATERAL SUPPORT FOR CMU PARTITION
SCALE NONE

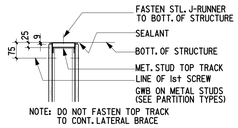


NOTE: DO NOT FASTEN TOP TRACK TO CONT. LATERAL BRACE

13 A505 TYP. TOP RACK
SCALE NONE

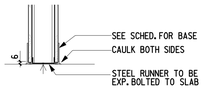


14 A505 TYP. BOTTOM RACK
SCALE NONE

### TYP NOTE:

- CARRY GWB TO 100mm ABV CLG (MIN) @ RMS W/ACT TILE CEILINGS.
- CARRY GWB TO CLG LN @ RMS W/GWB CEILINGS.
- METAL STUD CEILING JOISTS SHALL BE ON THE SHORTER SPAN OF ANY ROOM.

# MISCELLANEOUS DETAILS

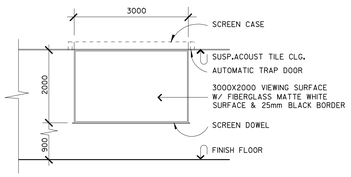


A A505 ELEVATION
SCALE NONE

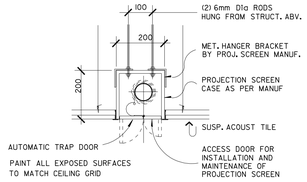


B A505 SECTION
SCALE NONE

15 A505 PROJECTION SCREEN
SCALE NONE

NOTE: ALL DIMENSIONS SHOWN ARE IN MILLIMETERS.

US Army Corps of Engineers
New York District

| Symbol | Description | Date | Appr. |
|---|---|---|---|

| | | | |
|---|---|---|---|
| Designed by: | | Date: | Size: Rev. |
| Dwn by: | Ckd by: | Drawing file no.: | |
| Reviewed by: | | Drawing code: | |
| Submitted by: | | Plot date: 05-JAN-2005 16:26<br>Plot by: eSandwo<br>Style: c:\pltstyles\ | |

U.S. ARMY ENGINEER DISTRICT
CORPS OF ENGINEERS
NEW YORK, NEW YORK

File name: S:\Source\military\Fort Hamilton\MPS\Architectural\MPS\A_A505.dgn

PN 82224
MILITARY POLICE STATION
FORT HAMILTON, NY

MISCELLANEOUS DETAILS

Sheet reference number:
A–505

Submitted by: eSandwo
Settings: c:\pltstyles\ Hamilton\MPS\Architectural\MPS\A_A505.dgn
Plot Date: 05-JAN-2005 16:26

# ROOM FINISH SCHEDULE

## BASEMENT LEVEL

| ROOM NO. | ROOM | FLOOR MAT. | FLOOR FINISH | FLOOR COLOR | BASE MAT. | BASE FINISH | BASE COLOR | WEST WALL MAT. | WEST WALL FINISH | WEST WALL F.R. (HOUR) | EAST WALL MAT. | EAST WALL FINISH | EAST WALL F.R. (HOUR) | NORTH WALL MAT. | NORTH WALL FINISH | NORTH WALL F.R. (HOUR) | SOUTH WALL MAT. | SOUTH WALL FINISH | SOUTH WALL F.R. (HOUR) | CEILING MAT. | CEILING FINISH | CEILING F.R. (HOUR) | CEILING HEIGHT (mm) | REMARKS | MATERIAL MANUFACTURER | COLOR |
|---|---|---|---|---|---|---|---|---|---|---|---|---|---|---|---|---|---|---|---|---|---|---|---|---|---|---|
| B01A | CORRIDOR | VCT | | SEE PLAN | RB | | BLACK BROWN | GWB | PT-3 | (1 HR) | GWB | PT-3 | - | GWB | PT-3 | (1 HR) | GWB | PT-3 | (1 HR) | ACT | - | N.A. | 2450 | 2450 | 2450 | |
| B01B | CORRIDOR | VCT | | SEE PLAN | RB | | BLACK BROWN | GWB | PT-3 | (1 HR) | GWB | PT-3 | (1 HR) | GWB | PT-3 | (1 HR) | GWB | PT-3 | (1 HR) | ACT | - | N.A. | 2450 | | | |
| B01C | CORRIDOR | VCT | | SEE PLAN | RB | | BLACK BROWN | GWB | PT-3 | (1 HR) | GWB | PT-3 | (1 HR) | GWB | PT-3 | (1 HR) | GWB | PT-3 | (1 HR) | ACT | - | N.A. | 2450 | | | |
| B02 | ELEV. MACHINE ROOM | SEAL CONC | | - | RB | | BLACK BROWN | CMU | PT-1 | (1 HR) | CONC | PT-1 | N.A | CONC | PT-1 | N.A | CMU / GWB | PT-1 | (1 HR) | EXP STR | - | - | 4250 | | | |
| B03 | CONFERENCE/CLASSROOM | VCT | | SEE PLAN | RB | | BLACK BROWN | GWB | VWC-1 | N.A. | GWB | VWC-1 | (1 HR) | GWB | VWC-1 | N.A | GWB | VWC-1 | (1 HR) | ACT | - | N.A. | 2740 | | | |
| B04 | UPS BATTERY ROOM | SEAL CONC | | | RB | | BLACK BROWN | GWB | PT-1 | (1 HR) | CONC | PT-1 | N.A | CMU / GWB | PT-1 | (1 HR) | GWB | PT-1 | (1 HR) | EXP STR | - | - | 4250 | | | |
| B05 | ELECTRICAL ROOM | VCT-1 | | | RB | | BLACK BROWN | GWB | PT-1 | (1 HR) | CONC | PT-1 | N.A | GWB | PT-1 | (1 HR) | CONC | PT-1 | - | EXP STR | - | - | 4250 | | | |
| B06 | CLOSET | VCT-1 | | | RB | | BLACK BROWN | GWB | PT-1 | (1 HR) | GWB | PT-1 | - | GWB | PT-1 | - | CONC | PT-1 | N.A | GWB | PT-2 | N.A. | 2450 | | | |
| B07 | TEL COMM/SERVICE CTR. | VCT-1 | | | RB | | BLACK BROWN | GWB | PT-1 | - | GWB | PT-1 | (1 HR) | GWB | PT-1 | - | CONC | PT-1 | N.A | EXP STR | - | - | 4250 | | | |
| B08 | HIGH VALUE STOR. ROOM | VCT-1 | | | RB | | BLACK BROWN | GWB | PT-1 | - | GWB | PT-1 | (1 HR) | GWB | PT-1 | (1 HR) | GWB | PT-1 | - | EXP STR | - | - | 4250 | | | |
| B09 | NOT USED | | | | | | | | | | | | | | | | | | | | | | | | | |
| B10A | WOMENS TOILET | PPT-1 | | | PPT-2 | | | WR GWB | PPT-2 | - | - | - | - | WR GWB | PPT-2 | - | WR GWB | PPT-2 | - | WR GWB | PT-2 | - | 2450 | | | |
| B10B | WOMENS LOCKERS | PPT-1 | | | PPT-2 | | | GWB | PPT-2 | - | GWB | PPT-2 | - | GWB | PPT-2 | (1HR) | CONC | PPT-2 | - | WR GWB | PT-2 | - | 2450 | | | |
| B10C | WOMENS SHOWERS | PPT-1 | | | PPT-2 | | | WR GWB | PPT-2 | - | WR GWB | PPT-2 | - | WR GWB | PPT-2 | (1HR) | WR GWB | PPT-2 | - | WR GWB | PT-2 | - | 2450 | | | |
| B11 | WOMENS TOILET VEST. | VCT-1 | | | RB | | BLACK BROWN | GWB | PT-1 | - | GWB | PT-1 | - | GWB | PT-1 | (1HR) | GWB | PT-1 | - | GWB | PT-2 | - | 2450 | | | |
| B12 | JANITORS CLOSET | VCT-1 | | | RB | | BLACK BROWN | WR GWB | PT-1 | - | GWB | PT-1 | - | GWB | PT-1 | (1HR) | GWB | PT-1 | - | GWB | PT-2 | - | 4250 | | | |
| B13A | MENS TOILET VEST. | PPT-1 | | | PPT-2 | | | GWB | PPT-2 | - | GWB | PPT-2 | - | GWB | PPT-2 | (1HR) | GWB | PPT-2 | - | WR GWB | PT-2 | - | 2450 | | | |
| B13B | MENS TOILET | PPT-1 | | | PPT-2 | | | GWB | PPT-2 | - | WR GWB | PPT-2 | - | WR GWB | PPT-2 | - | WR GWB | PPT-2 | - | WR GWB | PT-2 | - | 2450 | | | |
| B13C | MENS SHOWERS | PPT-1 | | | PPT-2 | | | WR GWB | PPT-2 | - | WR GWB | PPT-2 | - | WR GWB | PPT-2 | - | CONC | PPT-2 | - | WR GWB | PT-2 | - | 2450 | | | |
| B13D | MENS LOCKERS | PPT-1 | | | PPT-2 | | | CONC | PPT-2 | - | GWB | PPT-2 | - | CMU / GWB | PPT-2 | - | GWB / CONC | PPT-2 | - | WR GWB | PT-2 | - | 2450 | | | |
| B14 | PUMP ROOM | SEAL CONC | | | RB | | BLACK BROWN | CONC | PT-1 | - | GWB | PT-1 | - | GWB | PT-1 | - | CONC | PT-1 | - | EXP STR | | | 4250 | | | |
| ST-1 | STAIRWAY | ST / VCT-1 | | | RB | | BLACK BROWN | CMU | PT-1 | (1 HR) | GWB | PT-1 | N.A | CMU | PT-1 | (1 HR) | CMU | PT-1 | (1 HR) | GWB | PT-2 | | - | | | |
| ST-2 | STAIRWAY | ST / VCT-1 | | | RB | | BLACK BROWN | CMU | PT-1 | N.A. | CMU | PT-1 | (1 HR) | CMU | PT-1 | (1 HR) | CMU | PT-1 | (1 HR) | GWB | PT-2 | | - | | | |

## FIRST FLOOR

| ROOM NO. | ROOM | FLOOR MAT. | FLOOR FINISH | FLOOR COLOR | BASE MAT. | BASE FINISH | BASE COLOR | WEST WALL MAT. | WEST WALL FINISH | WEST WALL F.R. (HOUR) | EAST WALL MAT. | EAST WALL FINISH | EAST WALL F.R. (HOUR) | NORTH WALL MAT. | NORTH WALL FINISH | NORTH WALL F.R. (HOUR) | SOUTH WALL MAT. | SOUTH WALL FINISH | SOUTH WALL F.R. (HOUR) | CEILING MAT. | CEILING FINISH | CEILING F.R. (HOUR) | CEILING HEIGHT | REMARKS | MATERIAL MANUFACTURER | COLOR |
|---|---|---|---|---|---|---|---|---|---|---|---|---|---|---|---|---|---|---|---|---|---|---|---|---|---|---|
| 101 | VESTIBULE | EM / PPT4 | | | PPT-4 | | | GWB | PT-3 | (1 HR) | GWB | PT-3 | (1 HR) | GL MT GWB | PT-3 | - | GL MT GWB | PT-3 | | GWB | PT-2 | - | 2400 | | | |
| 102 | SUPPLY RM | VCT-1 | | | RB | | BLACK BROWN | GWB | PT-1 | - | GWB | PT-1 | (1 HR) | GWB | PT-1 | - | GWB | PT-1 | - | GWB | PT-2 | - | 2400 | | | |
| 103 | UNISEX H.C. TOILET | PPT-1 | | | PPT-2 | | | GWB | PPT | | GWB | PPT | | GWB | PPT | | GWB | PPT | | WR GWB | PT-2 | - | 2400 | | | |
| 104 | JANITORS CLOSET | VCT-1 | | | RB | | BLACK BROWN | GWB | PT-1 | | GWB | PT-1 | | GWB | PT-1 | | GWB | PT-1 | | GWB | PT-2 | - | 2400 | | | |
| 105 | LOBBY | PPT | | SEE PLAN | PPT-4 | | | GWB | VWC 1-2 | | GL MT GWB | VWC 1-2 | | GL MT GWB | VWC 1-2 | | GWB | VWC 1-2 | | ACT / GWB | PT-2 | - | 3000 | | | |
| 105A | WAITING AREA | PPT | | | PPT-4 | | | GWB | VWC 1-2 | | GL MT GWB | VWC 1-2 | | - | - | - | GWB | VWC 1-2 | | ACT / GWB | PT-2 | - | 3000 | | | |
| 106 | VEHICLE | VCT | | SEE PLAN | RB | | BLACK BROWN | GL MT GWB | PT-3 | | GWB | PT-3 | | GL MT GWB | PT-3 | - | GWB | PT-3 | | ACT | | - | 2740 | | | |
| 107 | TRAFFIC | VCT | | SEE PLAN | RB | | BLACK BROWN | GWB | PT-3 | | GWB | PT-3 | | GL MT GWB | PT-3 | | GWB | PT-3 | | ACT | | - | 2740 | | | |
| 108 | ADULT INTERVIEW | VCT | | SEE PLAN | RB | | BLACK BROWN | GWB | PT-3 | | GL MT GWB | PT-3 | | GL MT GWB | PT-3 | | GWB | PT-3 | | ACT | | - | 2740 | | | |
| 109 | POLICE INVESTIGATION | VCT | | SEE PLAN | RB | | BLACK BROWN | GL MT GWB | PT-3 | | GL MT GWB | PT-3 | | GL MT GWB | PT-3 | | GL MT GWB | PT-3 | | ACT | | - | 2740 | | | |
| 110 | JUVENILE INTERVIEW | VCT | | SEE PLAN | RB | | BLACK BROWN | GWB | PT-3 | | GL MT GWB | PT-3 | | GL MT GWB | PT-3 | | GWB | PT-3 | | ACT | | - | 2740 | | | |
| 111 | ELECTRICAL ROOM | VCT-1 | | | RB | | BLACK BROWN | CONC | PT-1 | | CMU | PT-1 | | GWB / GWB | PT-1 | | GWB | PT-1 | | EXP STR | | - | 4250 | | | |
| 112 | MECHANICAL ROOM | SEAL CONC | | | RB | | BLACK BROWN | GWB / CONC | PT-1 | | MT / CMU | PT-1 | | GWB | PT-1 | | MT / CMU | PT-1 | | EXP STR | | - | 4250 | | | |
| 113 | ARMS VAULT | VCT-1 | | | RB | | BLACK BROWN | CONC | PT-1 | | CONC | PT-1 | | MT / CONC | PT-1 | | CONC | PT-1 | | CONC | | - | SEE SECT'N | | | |
| 114 | TEL COMM | VCT-1 | | | RB | | BLACK BROWN | GWB | PT-1 | | GWB | PT-1 | | GWB / CONC | PT-1 | | CMU | PT-1 | | EXP STR | | - | 4250 | | | |
| 115 | MENS TOILET | PPT-1 | | | PPT-2 | | | WR GWB | PPT-2 | | WR GWB | PPT-2 | | WR GWB | PPT-2 | | WR GWB | PPT-2 | | WR GWB | PT-2 | - | 2400 | | | |
| 116 | WOMENS TOILET | PPT-1 | | | PPT-2 | | | WR GWB | PPT-2 | | WR GWB | PPT-2 | | WR GWB | PPT-2 | | WR GWB | PPT-2 | | WR GWB | PT-2 | - | 2400 | | | |
| 117 | EVIDENCE ROOM | VCT-1 | | | RB | | BLACK BROWN | GWB | PT-3 | | GWB | PT-3 | | GWB | PT-3 | | GL MT GWB | PT-3 | | ACT | | - | 2700 | | | |
| 118 | SQUAD RM | VCT-1 | | | RB | | BLACK BROWN | GWB | PT-3 | | GWB | PT-3 | | GWB | PT-3 | | GL MT GWB | PT-3 | | ACT | | - | 2700 | | | |
| 119 | PATROL RM | VCT-1 | | | RB | | BLACK BROWN | GL MT GWB | PT-3 | | GWB | PT-3 | | GWB | PT-3 | | GL MT GWB | PT-3 | | ACT | | - | 2700 | | | |
| 120 | FRONT DESK | VCT-1 | | | RB | | BLACK BROWN | GL MT GWB | PT-3 | | GL MT GWB | PT-3 | | GWB | PT-3 | | GWB | PT-3 | | ACT | | - | 2600 | | | |
| 121 | CORRIDOR | VCT | | SEE PLAN | RB | | BLACK BROWN | GL MT GWB | PT-3 | (1 HR) | MT / GWB | PT-3 | (1 HR) | GWB | PT-3 | (1 HR) | GWB | PT-3 | (1 HR) | ACT | | - | 2400 | | | |
| 122 | DETENTION #1 | VCT | | | RB | | BLACK BROWN | CMU | PT-1 | | CMU | PT-1 | | CMU | PT-1 | | CMU | PT-1 | | CONC | PT-2 | - | 2400 | | | |
| 123 | DETENTION #2 | VCT | | | RB | | BLACK BROWN | CMU | PT-1 | | CMU | PT-1 | | CMU | PT-1 | | CMU | PT-1 | | CONC | PT-2 | - | 2400 | | | |
| 124 | CORRIDOR | VCT | | SEE PLAN | RB | | BLACK BROWN | GWB | PT-3 | | GWB | PT-3 | | GWB | PT-3 | (1 HR) | GWB | PT-3 | (1 HR) | ACT | | - | 2400 | | | |
| 124A | CORRIDOR | VCT | | SEE PLAN | RB | | BLACK BROWN | GWB | PT-3 | | GWB | PT-3 | | GWB | PT-3 | (1 HR) | - | - | - | ACT | | - | 2400 | | | |
| 124B | CORRIDOR | VCT | | SEE PLAN | RB | | BLACK BROWN | GWB | PT-3 | | GWB | PT-3 | | GWB | PT-3 | (1 HR) | GWB | PT-3 | (1 HR) | ACT | | - | 2400 | | | |
| 124C | CORRIDOR | VCT | | SEE PLAN | RB | | BLACK BROWN | GWB | PT-3 | | GWB | PT-3 | | - | - | | - | - | | ACT | | - | 2400 | | | |
| 124D | CORRIDOR | VCT | | SEE PLAN | RB | | BLACK BROWN | GWB | PT-3 | | GWB | PT-3 | | - | - | - | PT-3 | PT-3 | (1 HR) | ACT | | - | 2400 | | | |
| ST-1 | STAIRWAY | ST / VCTI | | | RB | | BLACK BROWN | CMU | PT-1 | | CMU | PT-1 | | CMU | PT-1 | | CMU | PT-1 | | GWB | PT-2 | - | | | | |
| ST-2 | STAIRWAY | ST / VCTI | | | RB | | BLACK BROWN | CMU | PT-1 | | CMU | PT-1 | | CMU | PT-1 | | CMU | PT-1 | | GWB | PT-2 | - | | | | |
| | | | | | | | | | | | | | | | | | | | | | | - | | | | |

## SECOND FLOOR

| ROOM NO. | ROOM | FLOOR MAT. | FLOOR FINISH | FLOOR COLOR | BASE MAT. | BASE FINISH | BASE COLOR | WEST WALL MAT. | WEST WALL FINISH | WEST WALL F.R. (HOUR) | EAST WALL MAT. | EAST WALL FINISH | EAST WALL F.R. (HOUR) | NORTH WALL MAT. | NORTH WALL FINISH | NORTH WALL F.R. (HOUR) | SOUTH WALL MAT. | SOUTH WALL FINISH | SOUTH WALL F.R. (HOUR) | CEILING MAT. | CEILING FINISH | CEILING F.R. (HOUR) | CEILING HEIGHT | REMARKS | MATERIAL MANUFACTURER | COLOR |
|---|---|---|---|---|---|---|---|---|---|---|---|---|---|---|---|---|---|---|---|---|---|---|---|---|---|---|
| 201 | CORRIDOR | VCT | | SEE PLAN | RB | | BLACK BROWN | GWB | PT | (1 HR) | GWB | PT | (1 HR) | GWB | PT | (1 HR) | GWB | PT | (1 HR) | ACT | | | 2400 | | | |
| 202A | CORRIDOR | VCT | | SEE PLAN | RB | | BLACK BROWN | GWB | PT | (1 HR) | GWB | PT | (1 HR) | GWB | PT | (1 HR) | GWB | PT | (1 HR) | ACT | | | 2400 | | | |
| 202B | CORRIDOR | VCT | | SEE PLAN | RB | | BLACK BROWN | GWB | PT | (1 HR) | GWB | PT | (1 HR) | GWB | PT | (1 HR) | GWB | PT | (1 HR) | ACT | | | 2400 | | | |
| 202C | CORRIDOR | VCT | | SEE PLAN | RB | | BLACK BROWN | GWB | PT | (1 HR) | GWB | PT | (1 HR) | GWB | PT | (1 HR) | GWB | PT | (1 HR) | ACT | | | 2400 | | | |
| 203 | SUPPLY ROOM | VCT-1 | | | RB | | BLACK BROWN | GWB | PT-1 | | GWB | PT-1 | | GWB | PT-1 | | GWB | PT-1 | (1 HR) | GWB | PT-2 | | 4250 | | | |
| 204 | JANITOR'S CLOSET | VCT-1 | | | RB | | BLACK BROWN | GWB | PT-1 | | GWB | PT-1 | | MT / GWB | PT-1 | | GWB | PT-1 | | GWB | PT-2 | | 4250 | | | |
| 205 | WOMENS TOILET | PPT-1 | | | PPT | | | GWB | PPT | | GWB | PPT | | GWB | PPT | | GWB | PPT | | WR GWB | PT-2 | | 2400 | | | |
| 206 | MENS TOILET | PPT-1 | | | PPT | | | GWB | PPT | | GWB | PPT | | GWB | PPT | | GWB | PPT | | WR GWB | PT-2 | | 2400 | | | |
| 207 | TRAINING ROOM | VCT | | SEE PLAN | RB | | | GWB | PT | | GWB | PT | | GL MT GWB | PT | | GWB | PT | | ACT | | | 2700 | | | |
| 208 | NCOIC | VCT | | SEE PLAN | RB | | | GWB | PT | | GWB | PT | | GL MT GWB | PT | | GWB | PT | | ACT | | | 2700 | | | |
| 209 | 1st SGT | CP | | | RB | STR'T COVE | | GWB | VWC | | GWB | VWC | | GL MT GWB | VWC | | GWB | VWC | | ACT | | | 2700 | | | |
| 210 | COMMANDER | CP | | | RB | STR'T COVE | | GWB | VWC | | GL MT GWB | VWC | | GL MT GWB | VWC | | CMU | VWC | | ACT | | | 2700 | | | |
| 211 | AMG/SERVER RM | VCT | | SEE PLAN | RB | | BLACK BROWN | GWB | PT | | CMU | PT | | GWB | PT | | CMU | PT | | GWB | PT-2 | | 4250 | | | |
| 212 | TEL COMM RM | VCT | | SEE PLAN | RB | | BLACK BROWN | GWB | PT | (1 HR) | CMU | PT | | GWB / CMU | PT | | GWB | PT | | EXP STR | | | 4250 | | | |
| 213 | ELECTRICAL RM | VCT | | SEE PLAN | RB | | BLACK BROWN | GWB | PT | (1 HR) | CMU | PT | | GWB | PT | | CMU | PT | | EXP STR | - | | 4250 | | | |
| 214 | CLOSET | VCT | | SEE PLAN | RB | | BLACK BROWN | GWB | PT-1 | | GWB | PT-1 | | GWB | PT | | CMU | PT | | EXP STR | - | | 4250 | | | |
| 215 | CORRIDOR | VCT | | SEE PLAN | RB | | BLACK BROWN | GWB | PT | (1 HR) | GWB | PT | (1 HR) | GWB | PT | | CMU | PT | | GWB | PT-2 | | 2400 | | | |
| 216 | PHYSICAL/SECURITY RM | VCT | | SEE PLAN | RB | | BLACK BROWN | GWB | PT | | GWB | PT | | GWB | PT | (1 HR) | GL MT GWB | PT | | ACT | | | 2700 | | | |
| 217 | ADMIN. OFFICE | VCT | | SEE PLAN | RB | | BLACK BROWN | GWB | PT | | GWB | PT | | GWB | PT | (1 HR) | GL MT GWB | PT | | ACT | | | 2700 | | | |
| 218 | DEP PROV MARSHAL | CP | | | RB | STR'T COVE | | GWB | VWC | | GWB | VWC | | GWB | VWC | (1 HR) | GL MT GWB | VWC | | ACT | | | 2700 | | | |
| 219 | PROVOST MARSHAL | CP | | | RB | STR'T COVE | | GL MT GWB | VWC | | GWB | VWC | | GWB | VWC | (1 HR) | GL MT GWB | VWC | | ACT | | | 2700 | | | |
| 220 | STAFF LOUNGE | VCT | | SEE PLAN | RB | | BLACK BROWN | GWB | PT | | GWB | PT | | GWB | PT | | GWB | PT | | ACT | | | 2700 | | | |
| 221 | RECORDS/FILES RM | VCT | | SEE PLAN | RB | | BLACK BROWN | GWB | PT | | GWB | PT | | GWB | PT | | GWB | PT | | ACT | | | 2700 | | | |
| 222 | SUPPLY/COPY/FAX/MAIL | VCT | | SEE PLAN | RB | | BLACK BROWN | GWB | PT | | GWB | PT | | GWB | PT | | GWB | PT | | ACT | | | 2700 | | | |
| 223 | ORDERLY | VCT | | SEE PLAN | RB | | BLACK BROWN | GWB | PT | | GWB | PT | | GWB | PT | | GWB | PT | | ACT | | | 2700 | | | |
| ST-1 | STAIRWAY | ST / VCT | | | | | | CMU | PT-1 | GWB | GWB | PT-1 | | CMU | PT-1 | | CMU | PT-1 | | GWB | PT-2 | | | | | |
| ST-2 | STAIRWAY | ST / VCT | | | | | | GWB | PT-1 | CMU | CMU | PT-1 | | CMU | PT-1 | | CMU | PT-1 | | GWB | PT-2 | | | | | |

## ATTIC

| ROOM NO. | ROOM | FLOOR MAT. | FLOOR FINISH | FLOOR COLOR | BASE MAT. | BASE FINISH | BASE COLOR | WEST WALL MAT. | WEST WALL FINISH | WEST WALL F.R. (HOUR) | EAST WALL MAT. | EAST WALL FINISH | EAST WALL F.R. (HOUR) | NORTH WALL MAT. | NORTH WALL FINISH | NORTH WALL F.R. (HOUR) | SOUTH WALL MAT. | SOUTH WALL FINISH | SOUTH WALL F.R. (HOUR) | CEILING MAT. | CEILING FINISH | CEILING F.R. (HOUR) | CEILING HEIGHT | REMARKS | MATERIAL MANUFACTURER | COLOR |
|---|---|---|---|---|---|---|---|---|---|---|---|---|---|---|---|---|---|---|---|---|---|---|---|---|---|---|
| | ATTIC SPACE | SEAL CONC | | | - | | | - | | | - | | | - | | | - | | | EXP STR | - | | | | | |

## INTERIOR COLOR / FINISH MATERIALS LEGEND

| ITEM | MANUFACRURER | PATTERN/MODEL NO. | COLOR / DESCRIPTION | REMARKS |
|---|---|---|---|---|
| PT-1 | BENJAMINE MOORE | INTERIOR / READY MIXED | CLASSIC GRAY #OC23 | GENERAL WALL PAINT ( EGGSHELL FINISH ) |
| PT-2 | BENJAMINE MOORE | INTERIOR / READY MIXED | SNOW WHITE #OC66 | GENERAL CEILING PAINT ( EGGSHELL FINISH ) |
| PT-3 | BENJAMINE MOORE | INTERIOR / READY MIXED | BRANDY CREAM #OC4 | ( EGGSHELL FINISH ) |
| PT-4 | BENJAMINE MOORE | INTERIOR / READY MIXED | CLAY BEIGE #OC11 | ( EGGSHELL FINISH ) |
| PT-5 | BENJAMINE MOORE | INTERIOR / READY MIXED | LAMBSKIN #OC3 | ( EGGSHELL FINISH ) |
| VWC-1 | WOLF GORDON | VESCOM/MIRABLE TYPE I | #1614-1 | 1320mm WIDE / 435g |
| VWC-2 | WOLF GORDON | VESCOM/ASPEN TYPE II | #6617-2 | 1320mm WIDE / 653g |
| RB | ROPPE | RADIAL II | BLACK / BROWN | 4" HIGH COVE @ VCT/STRAIGHT @ CARPET |
| ST | FLEXCO | P #193 | DARK BEIGE | TREAD / RISER COMBINATION |
| VCT-1 | ARMSTRONG | EXCELON #52139 | LIMESTONE BEIGE | 300mm X 300mm SQUARE |
| VCT-2 | ARMSTRONG | EXCELON #52135 | MINERAL DUST | 300mm X 300mm SQUARE |
| VCT-3 | ARMSTRONG | EXCELON #52157 | CLAY RED | 300mm X 300mm SQUARE |
| PPT-1 | CROSSVILE | PORCELAIN STONE | EMPIRE | 300 X 300/NON-SLIP SURFACE FLR. TILE |
| PPT-2 | CROSSVILE | PORCELAIN STONE | ANTICO PRESTO | 150 X 150 WALL TILE |
| PPT-3 | CROSSVILE | PORCELAIN STONE | EMPIRE | 150 X 150 WALL TILE (ACCENT) |
| PPT-4 | AMERICAN OLEAN | PORCELAIN TILE | #ES05 | 300 X 300/NON-SLIP SURFACE FLR. TILE |
| PPT-4 | AMERICAN OLEAN | PORCELAIN TILE | #ES02 | 300 X 300/NON-SLIP SURFACE FLR. TILE |

## ABBREVIATIONS

| | | | |
|---|---|---|---|
| GWB | GYPSUM WALL BOARD | WRGWB | WATER RESIS'T GYP WALL BRD |
| CMU | CONCRETE MASONRY UNIT | VCT | VINYL COMPOSITION TILE |
| BR | BRICK | QT | QUARRY TILE |
| MT | METAL | CPT | CARPET |
| ALUM | ALUMINUM | CMT | CERAMIC MOSAIC TILE |
| GL | GLASS | CONC | CONCRETE |
| ACT | ACOUSTICAL CEILING TILE | WR | WATER RESISTANT |
| EXP | EXPOSED | FR | FIRE RATED |
| SEAL CONC | SEALED CONCRETE | WD | WOOD |
| CT | CERAMIC TILE | STR | STRUCTURE |
| RB | RUBBER BASE | EM | ENTRY MAT |
| RB | RUBBER BASE | PT | PAINT |
| ST | STAIR TREAD | PT | PAINT |

ALL DIMENSIONS ARE SHOWN IN MILLIMETERS.

## FINISH AND COLOR SCHEDULE NOTES

1. WATER RESISTANT GYPSUM BOARD ON BACK OF ALL WET PLUMBING FIXTURE WALLS.
2. 860mm HIGH WOOD CHAIR RAIL. SEE TYPICAL ROOM ELEVATIONS ON DWG # 108,109,110
3. PAINT ALL STEEL STAIR AND RAILING COMPONENTS
4. REFER TO DWG #108,109,110 FOR TILE PATTERNS

NOTE: ALL DIMENSIONS SHOWN ARE IN MILLIMETERS.

US Army Corps of Engineers
New York District

U.S. ARMY ENGINEER DISTRICT
CORPS OF ENGINEERS
NEW YORK, NEW YORK

Designed by: Dwn by: Ckd by: Reviewed by: Submitted by:

File name: S:\fileroom\military\Fort Hamilton\MPSta\Architectural\MPSta A-600.dgn

PN 52224
MILITARY POLICE STATION
FORT HAMILTON, NY

ROOM FINISH SCHEDULE

Sheet reference number: A-600

# DOOR SCHEDULE

| | DOOR | | | | | | | FRAME | | | | | | HDW | REMARKS |
|---|---|---|---|---|---|---|---|---|---|---|---|---|---|---|---|
| | ROOM | DOOR NO. | ELEV. | MAT'L. | SIZE W | SIZE H | SIZE T | FIRE RATED | ELEV. | MAT'L. | HEAD | JAMB | SILL | FIRE RATED | SET NO. | |
| BASEMENT LEVEL | STAIRWAY (ST-2) | B1 | C | HM | 900 | 2100 | 45 | 1HR | A | MT | H2 | J2 | | 1HR | | KP, VP |
| | ELEV. MACHINE ROOM | B2 | D | HM | 900 | 2100 | 45 | 1HR | D | MT | H4 | J4 | S2 | 1HR | | 508mmx508mm LOUVER |
| | CONFERENCE/CLASSROOM | B3 | C | HM | 900 | 2100 | 45 | 1HR | D | MT | H4 | J4 | S4 | 1HR | | VP ♿ |
| | CONFERENCE/CLASSROOM | B4 | C | HM | 900 | 2100 | 45 | 1HR | D | MT | H4 | J4 | S4 | 1HR | | VP ♿ |
| | STAIRWAY (ST-1) | B5 | C | HM | 900 | 2100 | 45 | 1HR | D | MT | H2 | J2 | | 1HR | | KP, VP |
| | UPS BATTERY ROOM | B6 | E | HM | 760 | 2100 | 45 | 1HR | E | MT | H4 | J4 | S2 | 1HR | | 508mmx508mm LOUVER |
| | ELECTRICAL ROOM | B7 | E | HM | 760 | 2100 | 45 | 1HR | E | MT | H4 | J4 | | 1HR | | 25mm UNDERCUT |
| | CLOSET | B8 | E | HM | 760 | 2100 | 45 | 1HR | E | MT | H4 | J4 | | 1HR | | |
| | TEL COMM/SERVICE CTR. | B9 | E | HM | 760 | 2100 | 45 | 1HR | E | MT | H4 | J4 | | 1HR | | |
| | HIGH VALUE STOR. ROOM | B10 | E | HM | 760 | 2100 | 45 | 1HR | E | MT | H4 | J4 | | 1HR | | |
| | WOMENS TOILET | B11 | E | HM | 760 | 2100 | 45 | 1HR | E | MT | H4 | J4 | | 1HR | | KP, 508mmx508mm LOUVER |
| | WOMENS TOILET VEST. | B12 | E | HM | 760 | 2100 | 45 | 1HR | E | MT | H4 | J4 | S3 | 1HR | | KP, 508mmx508mm LOUVER |
| | JANITORS CLOSET | B13 | E | HM | 760 | 2100 | 45 | 1HR | E | MT | H4 | J4 | S2 | 1HR | | KP, 25mm UNDERCUT |
| | MENS TOILET VEST. | B14 | E | HM | 760 | 2100 | 45 | 1HR | E | MT | H4 | J4 | S3 | 1HR | | KP, 508mmx508mm LOUVER |
| | PUMP ROOM | B15 | D | HM | 900 | 2100 | 45 | 1HR | D | MT | H4 | J4 | S2 | 1HR | | |
| FIRST FLOOR | VESTIBULE | 101 | A | ALUM | 2 @ 900 | 2150 | 45 | 1HR | A | ALUM | H1 | J1 | S1 | 1HR | | ♿ |
| | LOBBY | 102 | A | ALUM | 2 @ 900 | 2100 | 45 | 1HR | F | ALUM | H4 | J4 | S5 | 1HR | | ♿ |
| | CORRIDOR (124B) | 103 | *REUSE DOOR FROM EXISTING BUILDING* | | | | | | | | H4 | J4 | | 1HR | *EXISTING* | ♿ |
| | VEHICLE | 104 | C | WD | 900 | 2100 | 45 | 1HR | D | MT | H4 | J4 | | 1HR | | VP ♿ |
| | TRAFFIC | 105 | C | WD | 900 | 2100 | 45 | 1HR | D | MT | H4 | J4 | | 1HR | | VP ♿ |
| | ADULT INTERVIEW | 106 | C | WD | 900 | 2100 | 45 | 1HR | D | MT | H4 | J4 | | 1HR | | VP ♿ |
| | POLICE INVESTIGATION | 107 | C | WD | 900 | 2100 | 45 | 1HR | D | MT | H4 | J4 | | 1HR | | VP ♿ |
| | JUVENILE INTERVIEW | 108 | C | WD | 900 | 2100 | 45 | 1HR | D | MT | H4 | J4 | | 1HR | | VP ♿ |
| | CORRIDOR (121) | 109 | C | HM | 900 | 2100 | 45 | 1HR | D | MT | H4 | J4 | | 1HR | | ♿ |
| | DETENTION #1 | 110 | G | STL | 760 | 2100 | | | E | STL | H3 | J3 | | | | COORDINATE WITH MANUFACTURER |
| | DETENTION #2 | 111 | G | STL | 760 | 2100 | | | E | STL | H3 | J3 | | | | COORDINATE WITH MANUFACTURER |
| | FRONT DESK | 112 | B | WD | 900 | 2100 | 45 | 1HR | D | MT | H4 | J4 | | 1HR | | VP |
| | ACCESS PANEL | 112A | I | HM | 2 @ 600 | 1200 | 45 | 1HR | | | | | | 1HR | | |
| | STAIRWAY (ST-1) | 113 | C | HM | 900 | 2100 | 45 | 1HR | D | MT | H2 | J2 | | 1HR | | KP, VP |
| | STAIRWAY (ST-1) | 114 | C | HM | 900 | 2150 | 45 | 1HR | D | MT | H6 | J1 | S8 | 1HR | | PH |
| | MECHANICAL ROOM | 115 | F | HM | 1070 | 2150 | 45 | 1HR | C | MT | H6 | J1 | S7 | 1HR | | |
| | ELECTRICAL ROOM | 116 | E | HM | 760 | 2100 | 45 | 1HR | E | MT | H4 | J4 | | 1HR | | 25mm UNDERCUT |
| | ARMS VAULT | 117 | H | STL | 1120± | 2100 ± | | | B | STL | H6 | J6 | S6 | | | COORDINATE WITH MANUFACTURER |
| | TEL COMM | 118 | E | HM | 760 | 2100 | 45 | 1HR | E | MT | H4 | J4 | | 1HR | | |
| | MENS TOILET | 119 | E | HM | 760 | 2100 | 45 | 1HR | E | MT | H4 | J4 | S3 | 1HR | | KP, 25mm UNDERCUT |
| | WOMENS TOILET | 120 | E | HM | 760 | 2100 | 45 | 1HR | E | MT | H4 | J4 | S3 | 1HR | | KP, 25mm UNDERCUT |
| | EVIDENCE ROOM | 121 | D | HM | 900 | 2100 | 45 | 1HR | D | MT | H4 | J4 | | 1HR | | ♿ |
| | SQUAD RM | 122 | C | WD | 900 | 2100 | 45 | 1HR | D | MT | H4 | J4 | | 1HR | | VP ♿ |
| | PATROL RM | 123 | C | WD | 900 | 2100 | 45 | 1HR | D | MT | H4 | J4 | | 1HR | | VP ♿ |
| | STAIRWAY (ST-2) | 124 | C | HM | 900 | 2100 | 45 | 1HR | D | MT | H2 | J2 | | 1HR | | KP, VP |
| | STAIRWAY (ST-2) | 125 | C | HM | 900 | 2150 | 45 | 1HR | D | MT | H6 | J1 | S8 | 1HR | | PH |
| | JANITORS CLOSET | 126 | D | HM | 900 | 2100 | 45 | 1HR | D | MT | H4 | J4 | S3 | 1HR | | KP, 25mm UNDERCUT |
| | UNISEX H.C. TOILET | 127 | D | HM | 900 | 2100 | 45 | 1HR | D | MT | H4 | J4 | S3 | 1HR | | KP, 25mm UNDERCUT ♿ |
| | SUPPLY RM | 128 | D | HM | 900 | 2100 | 45 | 1HR | D | MT | H4 | J4 | | 1HR | | KP ♿ |
| | CORRIDOR (124A) | 129 | | | 900 | 2100 | 45 | 1HR | D | | H4 | J4 | | 1HR | | ♿ |
| SECOND FLOOR | STAIRWAY (ST-2) | 201 | C | HM | 900 | 2100 | 45 | 1HR | D | MT | H2 | J2 | | 1HR | | KP, VP |
| | SUPPLY ROOM | 203 | D | HM | 900 | 2100 | 45 | 1HR | D | MT | H4 | J4 | | 1HR | | KP. |
| | JANITOR'S CLOSET | 204 | D | HM | 900 | 2100 | 45 | 1HR | D | MT | H4 | J4 | S2 | 1HR | | KP, 25mm UNDERCUT |
| | WOMENS TOILET | 205 | D | HM | 900 | 2100 | 45 | 1HR | D | MT | H4 | J4 | S3 | 1HR | | KP, 25mm UNDERCUT ♿ |
| | MENS TOILET | 206 | D | HM | 900 | 2100 | 45 | 1HR | D | MT | H4 | J4 | S3 | 1HR | | KP, 25mm UNDERCUT ♿ |
| | STAFF LOUNGE | 207 | C | WD | 900 | 2100 | 45 | 1HR | D | MT | H4 | J4 | | 1HR | | VP ♿ |
| | TRAINING ROOM | 208 | C | WD | 900 | 2100 | 45 | 1HR | D | MT | H4 | J4 | | 1HR | | VP ♿ |
| | NCOIC | 209 | C | WD | 900 | 2100 | 45 | 1HR | D | MT | H4 | J4 | | 1HR | | VP ♿ |
| | 1st SGT | 210 | C | WD | 900 | 2100 | 45 | 1HR | D | MT | H4 | J4 | | 1HR | | VP ♿ |
| | SUPPLY/COPY/FAX/MAIL | 211 | C | WD | 900 | 2100 | 45 | 1HR | D | MT | H4 | J4 | | 1HR | | VP ♿ |
| | ORDERLY | 212 | C | WD | 900 | 2100 | 45 | 1HR | D | MT | H4 | J4 | | 1HR | | VP ♿ |
| | COMMANDER | 213 | C | WD | 900 | 2100 | 45 | 1HR | D | MT | H4 | J4 | | 1HR | | VP ♿ |
| | AMG/SERVER RM | 214 | D | HM | 900 | 2100 | 45 | 1HR | D | MT | H4 | J4 | | 1HR | | ♿ |
| | STAIRWAY (ST-1) | 215 | C | HM | 900 | 2100 | 45 | 1HR | D | MT | H2 | J2 | | 1HR | | KP, VP |
| | TEL COMM RM | 216 | D | HM | 900 | 2100 | 45 | 1HR | D | MT | H4 | J4 | | 1HR | | |
| | ELECTRICAL RM | 217 | D | HM | 900 | 2100 | 45 | 1HR | D | MT | H4 | J4 | | 1HR | | 25mm UNDERCUT |
| | CLOSET | 218 | E | HM | 760 | 2100 | 45 | 1HR | E | MT | H4 | J4 | | 1HR | | |
| | CORRIDOR (215) | 219 | C | HM | 900 | 2100 | 45 | 1HR | D | MT | H4 | J4 | | 1HR | | VP |
| | CORRIDOR (202A) | 220 | C | HM | 900 | 2100 | 45 | 1HR | D | MT | H4 | J4 | | 1HR | | VP ♿ |
| | SUPPLY/COPY/FAX/MAIL | 221 | C | WD | 900 | 2100 | 45 | 1HR | D | MT | H4 | J4 | | 1HR | | VP ♿ |
| | PHYSICAL/SECURITY RM | 222 | C | WD | 900 | 2100 | 45 | 1HR | D | MT | H4 | J4 | | 1HR | | VP ♿ |
| | ADMIN. OFFICE | 223 | C | WD | 900 | 2100 | 45 | 1HR | D | MT | H4 | J4 | | 1HR | | VP ♿ |
| | RECORDS/FILES RM | 224 | C | WD | 900 | 2100 | 45 | 1HR | D | MT | H4 | J4 | | 1HR | | ♿ |
| | STAFF LOUNGE | 225 | C | WD | 900 | 2100 | 45 | 1HR | D | MT | H4 | J4 | | 1HR | | VP ♿ |
| | CORRIDOR (202A) | 226 | C | WD | 900 | 2100 | 45 | 1HR | D | MT | H4 | J4 | | 1HR | | VP ♿ |
| | DEP PROV MARSHAL | 227 | C | WD | 900 | 2100 | 45 | 1HR | D | MT | H4 | J4 | | 1HR | | VP ♿ |
| | PROVOST MARSHAL | 228 | C | WD | 900 | 2100 | 45 | 1HR | D | MT | H4 | J4 | | 1HR | | VP ♿ |

## DOOR ELEVATIONS

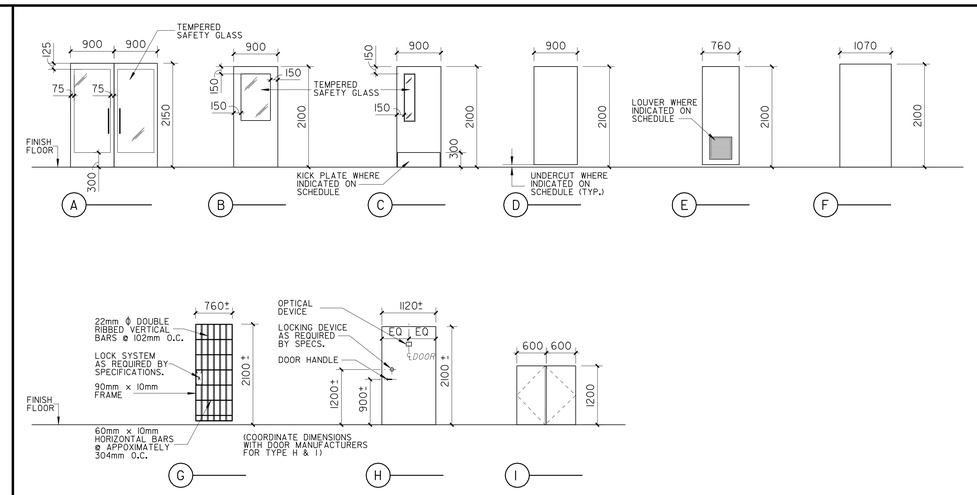


## DOOR FRAMES

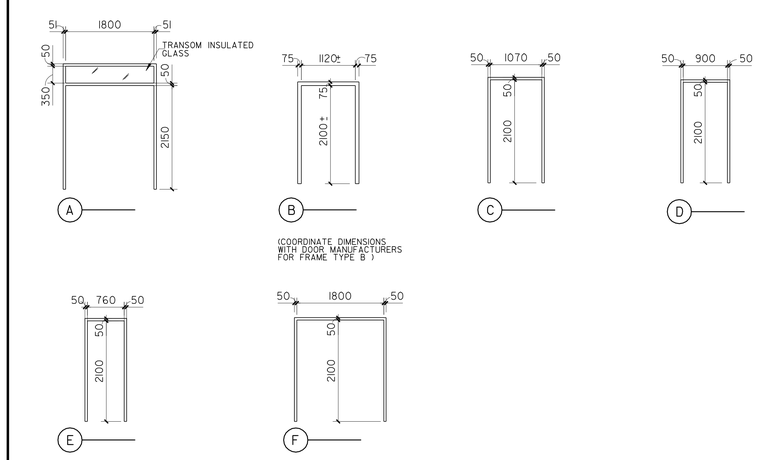


## ABBREVIATIONS

| | |
|---|---|
| HM | HOLLOW METAL |
| ALUM | ALUMINUM |
| VP | VISION PANEL |
| KP | KICK PLATE |
| MT | METAL |
| MDH | MAGNETIC DOOR HOLDER |
| HR | HOUR |
| WD | SOLID CORE WOOD |
| STL | STEEL |
| PH | PANIC HARDWARE |

## NOTES

1. HEAD, JAMB AND SILL DETAILS ARE LOCATED ON DRAWING A-602.
2. ♿ DENOTES DOORS TO COMPLY WITH PHYSICALLY IMPAIRED REQUIREMENTS AND ANSI A117.1

NOTE: ALL DIMENSIONS SHOWN ARE IN MILLIMETERS.

US Army Corps of Engineers
New York District

U.S. ARMY ENGINEER DISTRICT
CORPS OF ENGINEERS
NEW YORK, NEW YORK

PN 52224
MILITARY POLICE STATION
PORT HAMILTON, NY

DOOR SCHEDULE,
DOOR TYPES, & FRAMES

Sheet reference number:
A-601

Designed by: Date: Size: Rev:
Dwn by: Ckd by: Drawing file no.:
Reviewed by: Drawing code:
Submitted by: Plot date: 05-JAN-2005 16:27
Plot by: eSandes
Scale: 1:1700000.00000
File name: S:\Benson\military\portHamilton\MPs\mcinstruct\MPfts A-600.dgn

Plot Date: 05-JAN-2005 16:27
Submitted by: eSandes
Letterhead\Military\PortHamilton\MPfts A-600.dgn

# DOOR DETAILS

## DOOR HEAD DETAILS

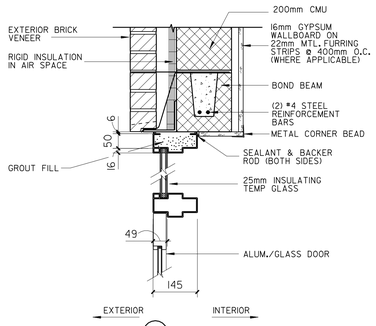


H1

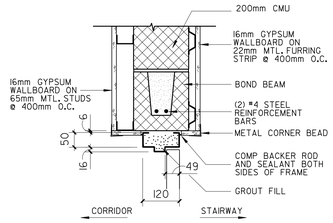


H2

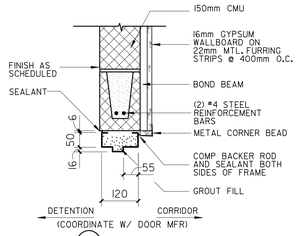


H3

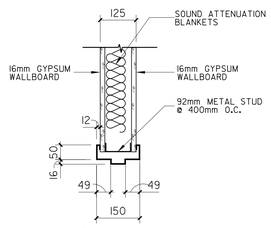


H4

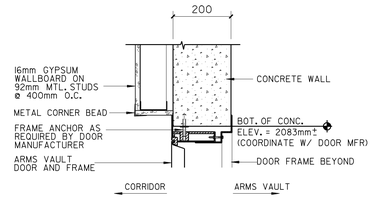


H5

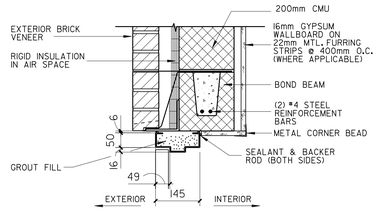


H6

## DOOR JAMB DETAILS

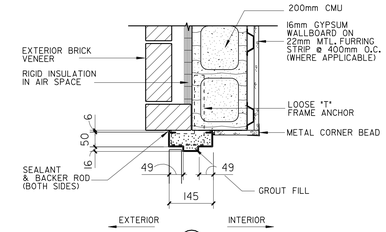


J1

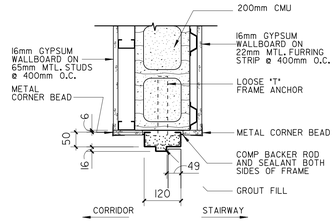


J2

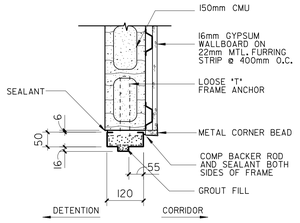


J3

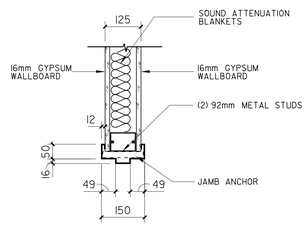


J4

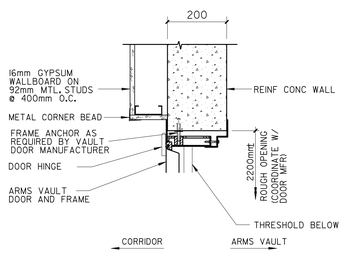


J5

## DOOR SILL DETAILS

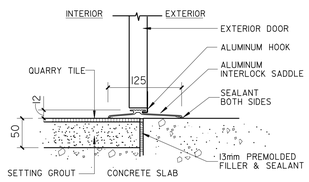


S1

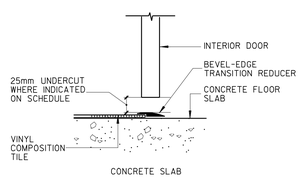


S2

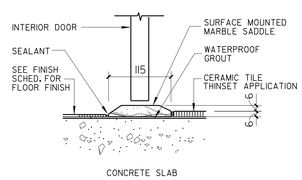


S3

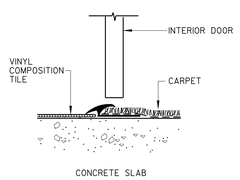


S4

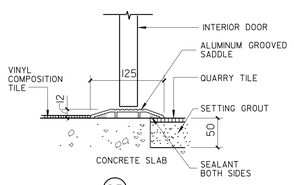


S5

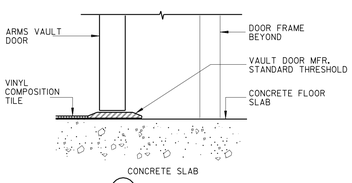


S6

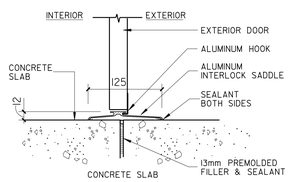


S7

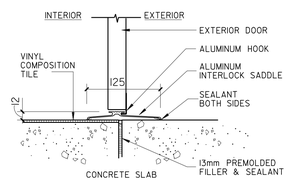


S8

NOTE: ALL DIMENSIONS SHOWN ARE IN MILLIMETERS.

# ENTRY MAT DETAILS

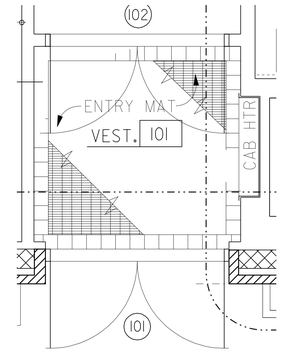


A/A602 ENLARGED VESTIBULE PLAN
SCALE: 1:20

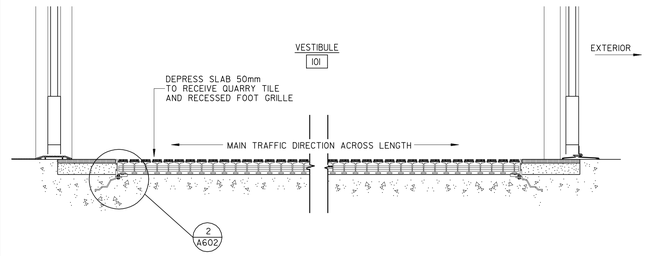


1/A602 FOOT GRILLE SECTION
SCALE: 1:10

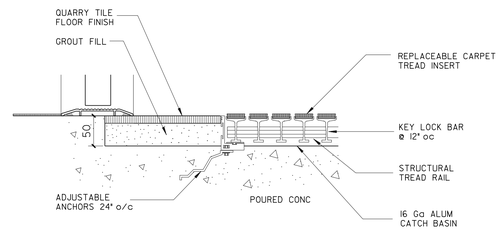


2/A602 FOOT GRILLE DETAIL
SCALE: 1:5

US Army Corps of Engineers
New York District

| Symbol | Description | Date | Appr. |
|---|---|---|---|

| Rev. | Size | Date: | Drawing file no.: | Drawing code: | Pnt date: 06-JAN-2006 | Plot by: 00406406 | Plot date: 07/10/2006 00:00:00 |
|---|---|---|---|---|---|---|---|

Designed by: | Dwn by: | Ckd by: | Reviewed by: | Submitted by:

U.S. ARMY ENGINEER DISTRICT
CORPS OF ENGINEERS
NEW YORK, NEW YORK

File name: S:\Services\military\fortHamilton\MPBq\architecture\DRFts A602.dgn

PN 52224
MILITARY POLICE STATION
FORT HAMILTON, NY

DOOR & ENTRY MAT DETAILS

Sheet reference number:
A–602

Submitted by: e3engfab
Plot Date: 05-JAN-2005 16:27
S:\Fortforeman\project Hamilton\MPB\fabricated\architecture\drfts a602.dgn

# WINDOW & LOUVER SCHEDULE

## WINDOW & LOUVER ELEVATIONS

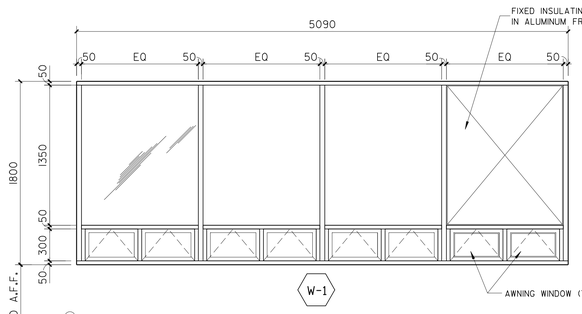


W-1

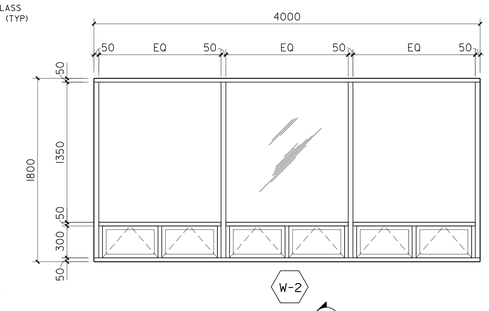


W-2

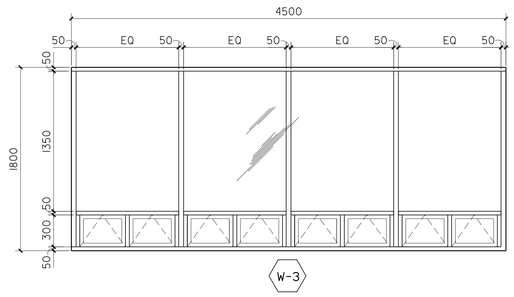


W-3

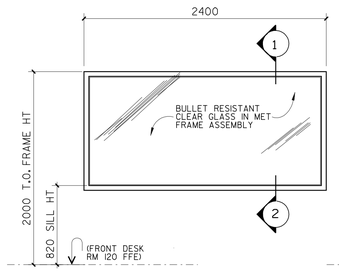


W-4 BULLET RESISTANT WINDOW
SCALE 1:20

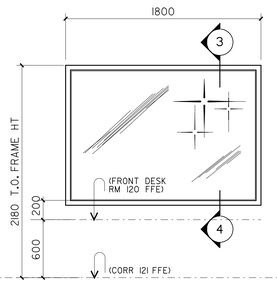


W-5 ONE WAY WINDOW
SCALE 1:20

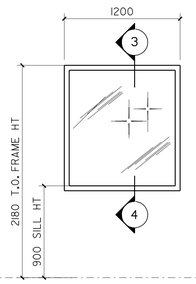


W-6 ONE WAY WINDOW
SCALE 1:20

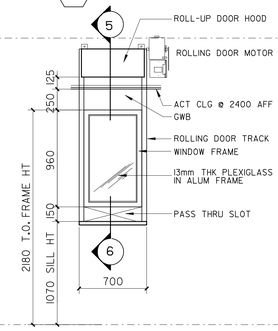


W-7 PASS THRU
SCALE 1:20

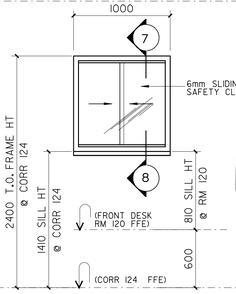


W-8 PASS THRU
SCALE 1:20

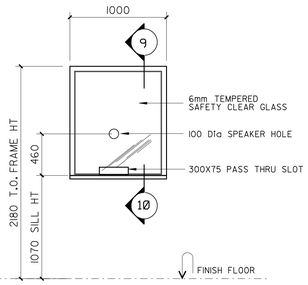


W-9 PASS THRU
SCALE 1:20

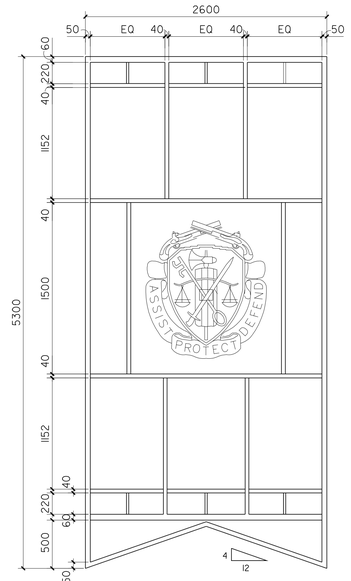


METAL PANEL WALL SYSTEM @ FRONT ENTRY
SCALE 1:20

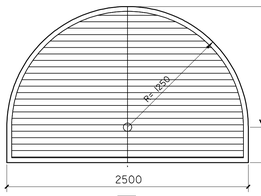


L-1

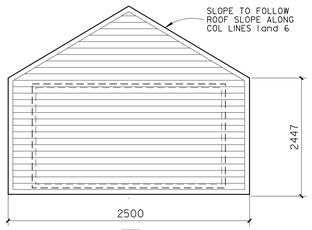


L-2

NOTE:

1. COORDINATE ALL LOUVERS W/MECH & STRUCT DWGS.
2. ALL LOUVERS SHALL BE STORMPROOFED TYPE.
3. VERIFY ACTIVE AND INACTIVE AREAS AS REQ BY MECH
4. COORDINATE LOUVER SIZES W/ BARREL VAULT MFR & ROOFING MFR SHOP DWGS & SPECS.

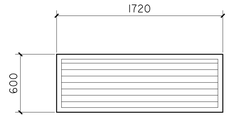


L-3

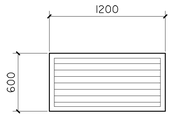


L-4

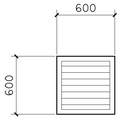


L-5

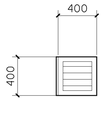


L-6

## INTERIOR WINDOW DETAILS

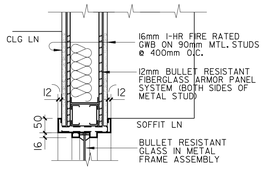


1 HEAD DET

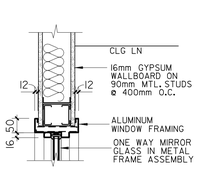


3 HEAD DET

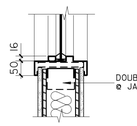


(JAMB DET SIM)
2 SILL DET

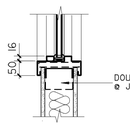


(JAMB DET SIM)
4 SILL DET

W-4 DETAIL
SCALE 1:10

W-5 W-6 DETAIL
SCALE 1:10

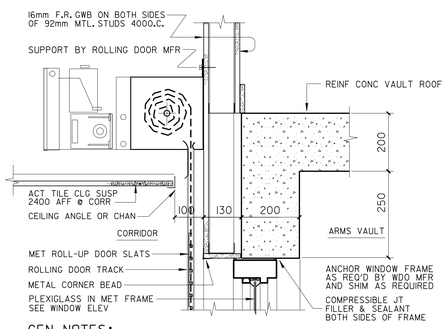


5 HEAD DET

GEN NOTES:

COORDINATE ALL DETAILS W/STRUCTURAL DRAWINGS, FIRE RATED MOTOR OPERATED ROLLING DOOR MANUF AND WINDOW MANUF SHOP DWGS AND SPECIFICATIONS. (TYP)

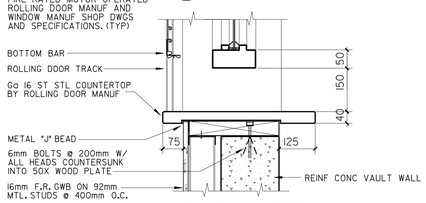


6 SILL DET

W-7 DETAIL
SCALE 1:10

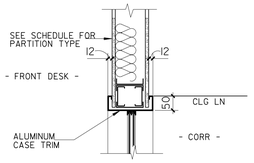


(JAMB DET SIM)
7 HEAD DET

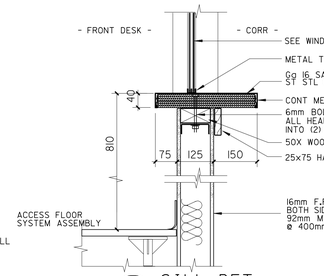


8 SILL DET

W-8 DETAIL
SCALE 1:10

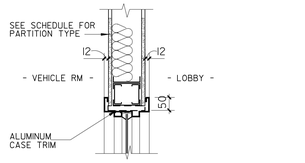


(JAMB DET SIM)
9 HEAD DET

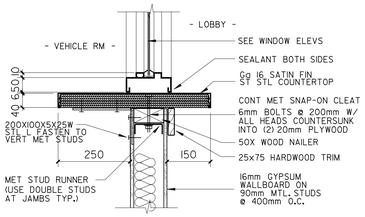


(JAMB DET SIM)
10 SILL DET

W-9 DETAIL
SCALE 1:10

ALL DIMENSIONS ARE SHOWN IN MILLIMETERS.

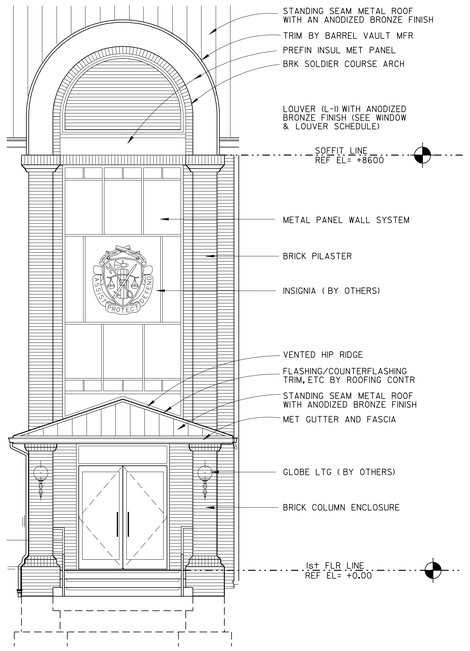


1 A603 MAIN ENTRANCE FACADE
SCALE: 1:50

NOTE: ALL DIMENSIONS SHOWN ARE IN MILLIMETERS.

US Army Corps of Engineers
New York District

| Symbol | Description | Date | Appr. |
|---|---|---|---|

| Size | Rev. |
|---|---|
| Date: | |
| Drawing file no.: | |
| Drawing code: | |
| Plot date: 05-JAN-2005 16:27 | |
| Plot by: ebendwb | |
| Size: 1370x1000x0000 | |

Designed by:
Dwn by: Ckd by:
Reviewed by:
Submitted by:
File name: S:\Source\military\Fort Hamilton\MPS\Architecture\Office 4603.dgn

U.S. ARMY ENGINEER DISTRICT
CORPS OF ENGINEERS
NEW YORK, NEW YORK

PN 82224
MILITARY POLICE STATION
FORT HAMILTON, NY

WINDOW & LOUVER SCHEDULE

Sheet reference number:
A-603

Plot Date: 05-JAN-2005 16:27
Submitted by: ebendwb
Spec/Specification/Spec/Hamilton/MPS/Architecture/Office 4 4603.dgn

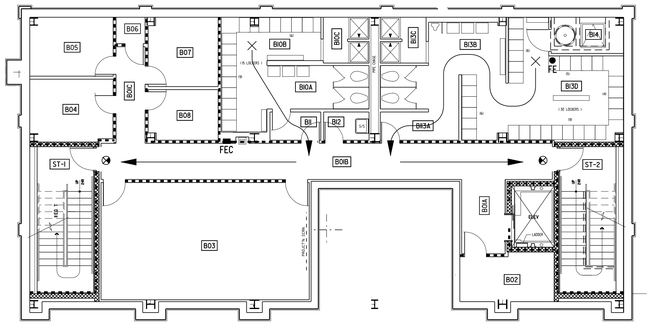


## BASEMENT PLAN
SCALE 1:100

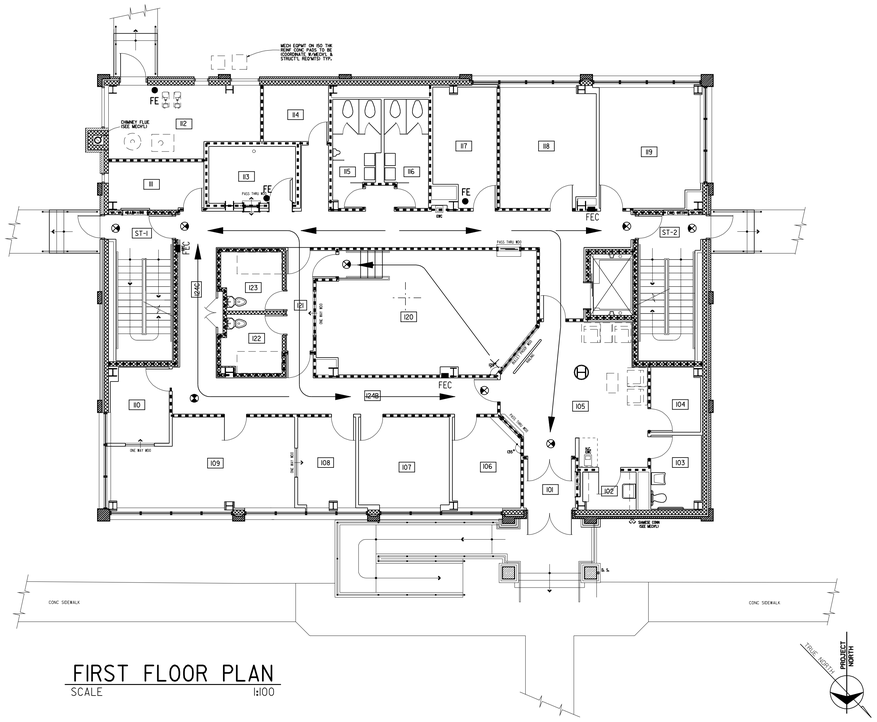


## FIRST FLOOR PLAN
SCALE 1:100

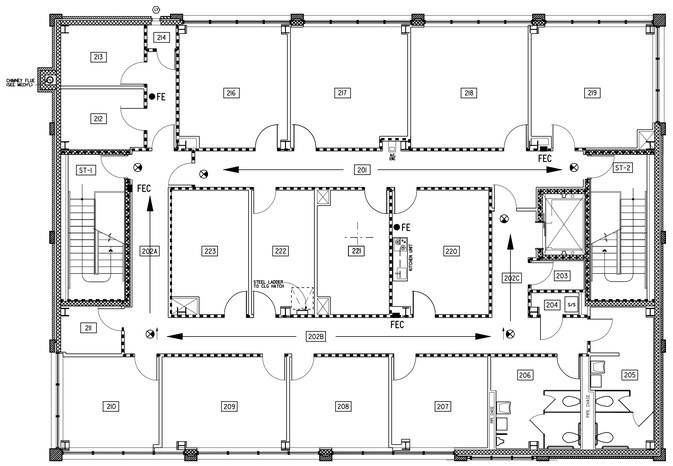


## SECOND FLOOR PLAN
SCALE 1:100

LEGEND

- 1 HOUR FIRE RATED WALL WITH ¾ HOUR FIRE RATED DOOR
- FE — FIRE EXTINGUISHER - WALL MOUNTED (FE)
- FEC — FIRE EXTINGUISHER CABINET - SEMIRECESSED (FEC)
- (2) — OCCUPANCY LOAD, NUMBER OF PERSONS
- EXIT LIGHT SIGN, DARKENED PORTION INDICATES DIRECTION OF EXIT
- DIRECTION OF TRAVEL
- 109 — ROOM NUMBER

OCCUPANCY CALCULATION

AS PER NFPA 101

| | |
|---|---|
| OFFICE AREA : | 100 S.F. / PERSON |
| CONFERENCE ROOM : | 15 S.F. / PERSON |
| TOTAL OCCUPANCY LOAD : | 1500 PEOPLE |

NOTES:

1. ALL PIPE PENETRATIONS THROUGH ONE HOUR FIRE RATED CONSTRUCTION SHALL BE THOROUGHLY PACKED WITH FIRESTOPPING AT THE POINT OF PENETRATION WITH FIRESAFING TO PROVIDE A UNIFORM RATING THROUGHOUT. (SEE SPECIFICATION)

THIS DRAWING IS NOT PART OF THE CONSTRUCTION CONTRACT AND SHALL BE USED FOR REFERENCE ONLY. ALL INFORMATION ON THIS DRAWING ARE CONTAINED ELSEWHERE.

US Army Corps of Engineers
New York District

| Symbol | Description | Date | Appr. |
|---|---|---|---|

U.S. ARMY ENGINEER DISTRICT
CORPS OF ENGINEERS
NEW YORK, NEW YORK

Designed by: | Date: | Size | Rev.
Dwn by: | Ckd by: | Drawing file no.:
Reviewed by: | Drawing code:
Submitted by: | Plot date: 05-JAN-2005 16:27 | Plot by: adendwo | Scale: As Noted
File name: S:\Mission\military\Fort Hamilton\MPS\Architecture\MPS\LS-101.dgn

PN 62224
MILITARY POLICE STATION
FORT HAMILTON, NY

# LIFE SAFETY PLAN

Sheet reference number:
LS–101

Submitted by: adendwo
Plot Date: 05-JAN-2005 16:27
S:\Mission\military\Fort Hamilton\MPS\Architecture\MPS\LS-101.dgn

# ELECTRICAL LEGEND

INDIVIDUAL DRAWINGS CONTAIN ADDITIONAL SYMBOLS

1'x4' OR 2'x4' RECESSED FLUORESCENT LIGHTING FIXTURE PROVIDE JUNCTION BOX AND 4' TO 6' LONG FLEXIBLE METALLIC CONDUIT WITH 3 #12 THW CONDUCTORS FOR ALL RECESSED FIXTURES (THOUGH NOT SHOWN ON DRAWINGS)

LETTER DENOTES CONTROL, NUMBER DENOTES CIRCUIT DESIGNATION

EMERGENCY LIGHT FIXTURE (LIFE SAFETY).
'NL' DENOTES NIGHT LIGHT AND SLASH DENOTES EMERGENCY BATTERY POWER PACK.

1'x4' SURFACE OR PENDANT MOUNTED FLUORESCENT FIXTURE WITH OUTLET BOX AS REQUIRED

ROUND DOWNLIGHT FIXTURE

JUNCTION BOX OR OUTLET BOX - RECESSED OR SURFACE, WALL OR CEILING-MOUNTED

EXIT LIGHTS (WITH ARROWS WHERE INDICATED) DARKENED PORTION INDICATES FACESIDE. EMERGENCY BATTERY TYPE WHERE INDICATED. BRACKET INDICATES WALL MOUNTED TYPE UNSWITCHED CIRCUIT LEG

FIXTURE TYPE AS NOTED ON SCHEDULE. TYPE APPLIES TO AREA WHERE SYMBOL IS SHOWN d- DENOTES DIMMING BALLAST

$S_a$ SINGLE POLE SWITCH 4'-0" AFF.; "a" INDICATES SWITCH IS CONTROLLING DEVICE NOTED BY "a"

$S_d$ DIMMER SWITCH 4'-0" AFF

$S_{d_3}$ 3-WAY DIMMER SWITCH 4'-0" AFF

$S_k$ KEY OPERATED SWITCH 4'-0" AFF (U.O.N.)

$S_{k_3}$ 3-WAY KEY OPERATED SWITCH 4'-0" AFF (U.O.N.)

$S_3$ THREE-WAY SWITCH, 4'-0" AFF

$S_P$ LIGHT SWITCH WITH PILOT LIGHT, 4'-0" AFF

$S_4$ 4-WAY SWITCH 4'-0" AFF (U.O.N.)

DUPLEX CONVEN. RECEP, GROUNDING TYPE, 1'-6" AFF, NEMA 5-20R, (U.O.N.) ORANGE DEVICE FOR CIRCUITS CONNECTED TO UPS

$_C$ DUPLEX RECEPTACLE, NEMA 5-20R, WITH ISOLATED GROUND AND SURGE SUPPRESSION, 1'-6' AFF(U.O.N)

4 RECP (NEMA 5-20R) IN TWO GANG WALL BOX, 1'-6" AFF (U.O.N.) ORANGE DEVICE FOR CIRCUITS CONNECTED TO UPS

GFCI DUPLEX RECEPTACLE, NEMA 5-20R, WITH GROUND FAULT CIRCUIT INTERRUPTER

SINGLE CONVEN. RECEP, GROUNDING TYPE, 1'-6" AFF, 5-20R, (U.O.N.)

RECEPTACLE NEMA CONFIGURATION AS NOTED

CLOCK OUTLET 1'-0" BELOW FINISHED CEILING

COMBINATION MOTOR STARTER-DISCONNECT HORSEPOWER RATED (HAND-OFF-AUTO SW)

DISCONNECT SWITCH, UNFUSED (U.O.N.) HORSEPOWER RATED, 4'6" AFF (U.O.N.)

MOTOR WITH DISCONNECT SWITCH APPROX. H.P. INDICATED

SURFACE MOUNTED PANELBOARD & CABINET

FACE FLUSH MOUNTED PANELBOARD & CABINET

LP-1/1 HOMERUN TO PANELBOARD 2-12 AWG +#12 GRD IN ¾" CONDUIT COPPER CONDUCTORS, TYPE THHW/THHN, UON. LP-1/1 INDICATE DESIGNATED PANEL AND CIRCUIT NUMBER (SEE GENERAL NOTE 17)

LP-1/1 EXISTING HOMERUN TO PANELBOARD

BRANCH CIRCUIT, CONCEALED, (ABOVE CEILING, IN WALLS, ETC.) (SEE GENERAL NOTE 17)

WP WEATHER PROOF

TVSS TRANSCIENT VOLTAGE SURGE SUPPRESSION

TV CATV OUTLET, PROVIDE SINGLE GANG BOX WITH "RF" CONNECTOR

AIC AMPERES INTERRUPTING CAPACITY (SYMMETRICAL)

EF EXHAUST FAN

HP HORSEPOWER

RGS RIGID GALVANIZED STEEL CONDUIT

TYP TYPICAL

NTS NOT TO SCALE

PE PHOTOELECTRIC CELL

A ASTRONOMICAL TIME CLOCK

NEMA NATIONAL ELECTRICAL MANUFACTURER'S ASSOCIATION

NEC NFPA 70-2002 NATIONAL ELECTRICAL CODE

D MOTION SENSORS, SEE SHT. E-?, NUMBER INDICATES TYPE OF COVERAGE

SHT SHEET NUMBER

LR LIGHTING RELAY

C CONTACTOR FOR SECURITY LIGHTS' ASTRONOMICAL TIMER

BFG BELOW FINISHED GRADE

GFCI GROUND FAULT CIRCUIT INTERRUPTER

F FIRE ALARM SYSTEM MANUAL STATION, ADDRESSABLE TYPE, 4'-0" AFF

H FIRE HORN/STROB ALARM SYSTEM AUDIO & SIGNALING DEVICE, 7'-6" AFG HORN/STROBE

SP PUBLIC ADDRESS SPEAKER (RECESSED IN CEILING, WITH BACK BOX)

SP PUBLIC ADDRESS SPEAKER WALL MOUNTED (HORN)

H HEAT DETECTOR (FIXED TEMPERATURE AND RATE OF RISE) 135°F (UON) INTELLIGENT, ADDRESSEBLE TYPE

S SMOKE DETECTOR, INTELLIGENT, ADDRESSABLE TYPE

$S_D$ DUCT SMOKE DETECTOR, INTELLIGENT, ADDRESSABLE TYPE

FATX FIRE ALARM TRANSMITTER

FACP FIRE ALARM CONTROL PANEL

FA ANNUN FIRE ALARM REMOTE ANNUNCIATOR

FS FLOW SWITCH (SEE MECHANICAL DWG)

TS TAMPER SWITCH (SEE MECHANICAL DWG)

AFF ABOVE FINISHED FLOOR - MEASURED TO BOTTOM OF EQUIPMENT (U.O.N.)

AFG ABOVE FINISHED GRADE

EC/E.C. EMPTY CONDUIT

EWC ELECTRIC WATER COOLER

NIC NOT IN CONTRACT

UG UNDERGROUND

UON/U.O.N. UNLESS OTHERWISE NOTED

E EXISTING

WHD WATT-HOUR DEMAND METER, DIGITAL R/O TO EMCS PULSE INITIATOR

100 AT / 225 AF CIRCUIT BREAKER "AT" DENOTES AMPERE TRIP, "AF" DENOTES AMPERE FRAME

FOR COMMUNICATIONS LEGEND SEE SHT. E-700 - E702

FOR SECURITY SYSTEMS LEGEND SEE SHT.'S E-700 - E702

FOR EXTERIOR ELECTRICAL LEGEND SCHEDULE SEE E-502

# GENERAL NOTES

1. WHERE RIGID STEEL CONDUIT IS SPECIFIED IT SHALL BE ONLY HEAVY WALL RIGID STEEL TYPE AND IF USED BELOW GRADE IT SHALL BE PVC COATED, 40 MIL
2. WHERE IMC IS SPECIFIED EITHER RIGID STEEL OR INTERMEDIATE METAL CONDUIT MAY BE USED.
3. ALL JUNCTION AND OUTLET BOXES INSTALLED OUTDOORS SHALL BE OF THE CAST THREADED HUB TYPE.
4. CONDUIT SIZES SHOWN ARE MINIMUM AND ARE BASED ON THW WIRING, IF OTHER TYPE WIRING IS USED, THE CONDUIT SIZES SHALL BE INCREASED TO PROVIDE MAX. (40%) PERCENT CONDUIT FILL AS PER NEC, AT NO ADDITIONAL COST TO THE GOVERNMENT.
5. GROUND ALL EXPOSED BUILDING STEELS USING NO. 4 AWG COPPER CONDUCTOR, BOND STEEL ACROSS ALL SEISMIC JOINTS AND EXPANSION JOINTS USING NO. 4 AWG COPPER CONDUCTOR AND WHERE REQUIRED TO MAINTAIN CONTINUITY FOR THOSE AREAS WHERE BUILDING STEEL IS EXPOSED.
6. ALL SWITCHES CONTROLLING MOTORS OR NON-LOCAL LIGHTING SHALL BE LABELED AS TO FUNCTION.
7. WHERE KEY OPERATED SWITCHES ARE SPECIFIED ALL KEYS MUST BE LABELED AND DELIVERED TO THE CONTRACTING OFFICER.
8. ALL DEVICES SHALL BE SELF GROUNDING TYPE, OR AN APPROPRIATE GROUND JUMPER SIZED PER NEC TABLE 250-95, SHALL BE INSTALLED.
9. USE DUCT SEAL AROUND CONDUCTORS WHERE CONDUITS ENTERING AND LEAVING THE BUILDING.
10. RECESSED FLUORESCENT FIXTURES SHALL BE BOLTED TO SUSPENDED CEILING SYSTEM AT EACH CORNER, OR SHALL BE INDEPENDENTLY SUPPORTED, SEE SPECIFICATIONS.
11. ALL FIXTURES & EQUIPMENT SHALL BE ADEQUATELY ANCHORED FOR SEISMIC ZONE 2.
12. FIXTURE PROTECTION FOR RECESSED FLUORESCENT FIXTURES IN FIRE-RATED CEILING SHALL BE IN ACCORDANCE WITH REGULATIONS OF UNDERWRITERS LABORATORIES FOR CEILING SYSTEMS INDICATED. BALLASTS SHALL BE EXTRA COOL-RUNNING TYPE APPROVED FOR THE INTENDED APPLICATION. SHOP DRAWINGS MUST BE SUBMITTED FOR APPROVAL FOR FIXTURE PROTECTION TOGETHER WITH THE LIGHTING FIXTURES, INDICATING THE TYPE OF BALLAST.
13. IN ADDITION TO AREAS INDICATED, ALL CORRIDOR WALLS ARE FIRE-RATED, ALL PENETRATIONS OF CONDUITS THROUGH FIRE-RATED WALLS OR CEILINGS MUST BE SEALED AROUND CONDUIT SO AS TO RESTORE ORIGINAL FIRE-RATING OF WALLS OR CEILINGS. APPROVED FIRE-RATED FITTINGS SHALL BE USED. SEE ARCHITECTURAL SHEETS FOR EXACT LOCATIONS AND RATINGS OF FIRE-RATED WALLS AND CEILINGS.
14. THE AVAILABLE SHORT CIRCUIT CURRENTS INDICATED ON ELECTRICAL PLAN ARE BASED ON TRANSFORMER IMPEDANCE AS INDICATED. IF A LOWER IMPEDANCE TRANSFORMER IS FURNISHED THE CONTRACTOR SHALL CALCULATE THE AVAILABLE SHORT CIRCUIT CURRENT IN COORDINATING AND PROVIDING ALL PROTECTIVE DEVICES AT NO ADDITIONAL COST TO THE GOVERNMENT.
15. FOR ALL FLUSH-MOUNTED PANELBOARDS, TWO-3/4 INCH EMPTY CONDUITS WITH PULLWIRES SHALL BE EXTENDED FROM THE TOP OR SIDE OF THE PANELBOARD WITHIN THE WALL UP TO TWO SEPARATE 4 INCH X 2⅛ INCH SQUARE JUNCTION BOXES WITH BLANK COVERS, MOUNTED 10 FEET AFF, LABEL THE JUNCTION BOXES AND CONDUIT "SPARE".
17. PROVIDE THE NUMBER OF WIRES FOR THE CONTROL AND CIRCUITING AS SHOWN ON PLANS. ALL CIRCUITS (LIGHTING, RECEPTACLE, ETC. ) SHALL HAVE A SEPARATE GROUND CONDUCTOR. IN ADDITION, PROVIDE ISOLATED GROUND CONDUCTOR FOR ISOLATED GROUND RECEPTACLES AND PREWIRED WORK STATIONS.

NOTE: ALL DIMENSIONS SHOWN ARE IN MILLIMETERS.

US Army Corps of Engineers
New York District

| Symbol | Description | Date | Appr. |
|---|---|---|---|

U.S. ARMY ENGINEER DISTRICT
CORPS OF ENGINEERS
NEW YORK, NEW YORK

Designed by: | Date: | Size: | Rev.
Dwn by: | Ckd by: | Drawing No.
Reviewed by: | Drawing code:
Submitted by: | Plot date: 05-JAN-2006 16:27 | Plot by: elendfwb | Date: U:\000001\100000
File name: S:\Secure\Military\Fort Hamilton\MPs\Electrical\MPs E-000.dgn

PN 52224
MILITARY POLICE STATION
FORT HAMILTON, NY

# ELECTRICAL LEGEND, SYMBOLS & NOTES

Sheet reference number:
E–001

Submitted by: elendfwb
Splitter-Submitter:pwFort Hamilton\MPs\Electrical\MPs E-000.dgn
Plot Date: 05-JAN-2006 16:27

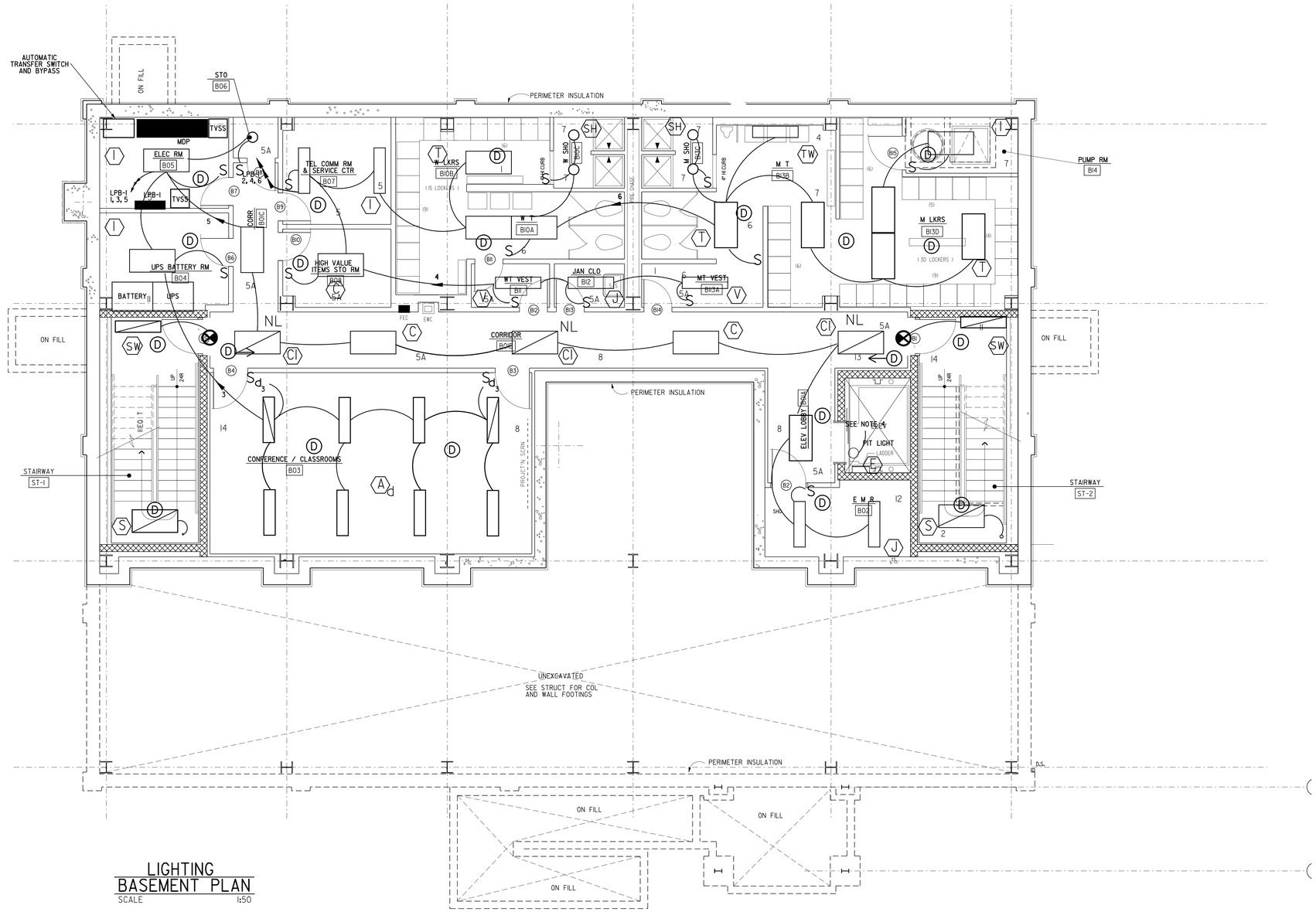


# LIGHTING BASEMENT PLAN

SCALE 1:50

**NOTE:**

PROVIDE THE NUMBER OF WIRES REQUIRED FOR THE CONTROL SHOWN ON THIS PLAN. ALL LIGHTING AND RECEPTACLE CIRCUITS SHALL BE PROVIDED WITH A DEDICATED NEUTRALS & GROUND CONDUCTOR.

**GENERAL NOTES FOR LIGHTING PLANS:**

1. CONTRACTOR SHALL PROVIDE THE NUMBER AND TYPE OF MOTION SENSORS, POWER PACKS, RELAYS, ETC., REQUIRED TO AUTOMATICALLY CONTROL LIGHTING IN AREAS SHOWN. THE TYPE AND NUMBER OF MOTION SENSORS SHOWN ARE ONLY FOR ILLUSTRATIVE PURPOSES (20 AMP POWER PACKS ARE NOT SHOWN). FOR TYPICAL MOTION SENSOR WIRING DIAGRAM SEE SHT. E-601. PRODUCTS SHALL BE AS MANUFACTURED BY WATT STOPPER, MYTECH OR APPROVED EQUAL. SENSORS SHALL NOT BE LOCATED NEAR MECHANICAL VENTS (GRILLES), VERIFY MINIMUM SPACING WITH MANUFACTURER.
2. PROVIDE SWITCHES (MOUNT 48" AFF). SEE WIRING DIAGRAM ON SHT. E-601 . CONTRACTOR SHALL DEMONSTRATE PROPER OPERATION THROUGH TESTING.
3. ALL CONDUITS SHALL BE RUN CONCEALED WITHIN WALLS, CEILINGS, ETC. TO THE MAXIMUM EXTENT POSSIBLE.
4. WIRE LIGHT FIXTURE FROM RECEPTACLE CIRCUIT VIA A WP LIGHT SWITCH LOCATED IN ELEVATOR PIT. COORDINATE LOCATION OF FIXTURE WITH ELEVATION MANUFACTURER.
5. WIRING FOR EXTERIOR LIGHTING SHALL NOT BE ROUTED ALONG THE EXTERIOR OF BUILDING BUT SHALL BE RUN CONCEALED.
6. CONNECT ALL EXIT SIGNS AND NIGHTLIGHTSON BASEMENT AND 1ST AND 2ND FLOORS TO PANEL LP1-1, SHOWN ON ELECTRICAL LIGHTING FLOOR PLANS
7. FOR EXACT LOCATION OF LIGHTING FIXTURES ON CEILINGS, SEE ARCH. REFLECTED CEILING PLANS.

GRAPH

1000mm 0

SCALE 1:50

NOTE: ALL DIMENSIONS SHOWN ARE IN MILLIMETERS.

US Army Corps of Engineers
New York District

| Symbol | Description | Date | Appr. |
|---|---|---|---|

U.S. ARMY ENGINEER DISTRICT
CORPS OF ENGINEERS
NEW YORK, NEW YORK

Designed by: | Date: | Size: | Rev.:
Dwn by: | Ckd by: | Drawing file no.:
Reviewed by: | Drawing code:
Submitted by: | Plot date: 05-JAN-2005 16:27 | Plot by: sdoerfler | File: 8080500000

File name: S:\Benson\military\Fort Hamilton\Lighting\Electrical\Lighting E-100.dgn

PN 52224
MILITARY POLICE STATION
FORT HAMILTON, NY

# ELECTRICAL LIGHTING BASEMENT PLAN

Sheet reference number:
E-100

Submitted by: sdoerfler
Plot Date: 05-JAN-2005 16:27
Plot By: sdoerfler

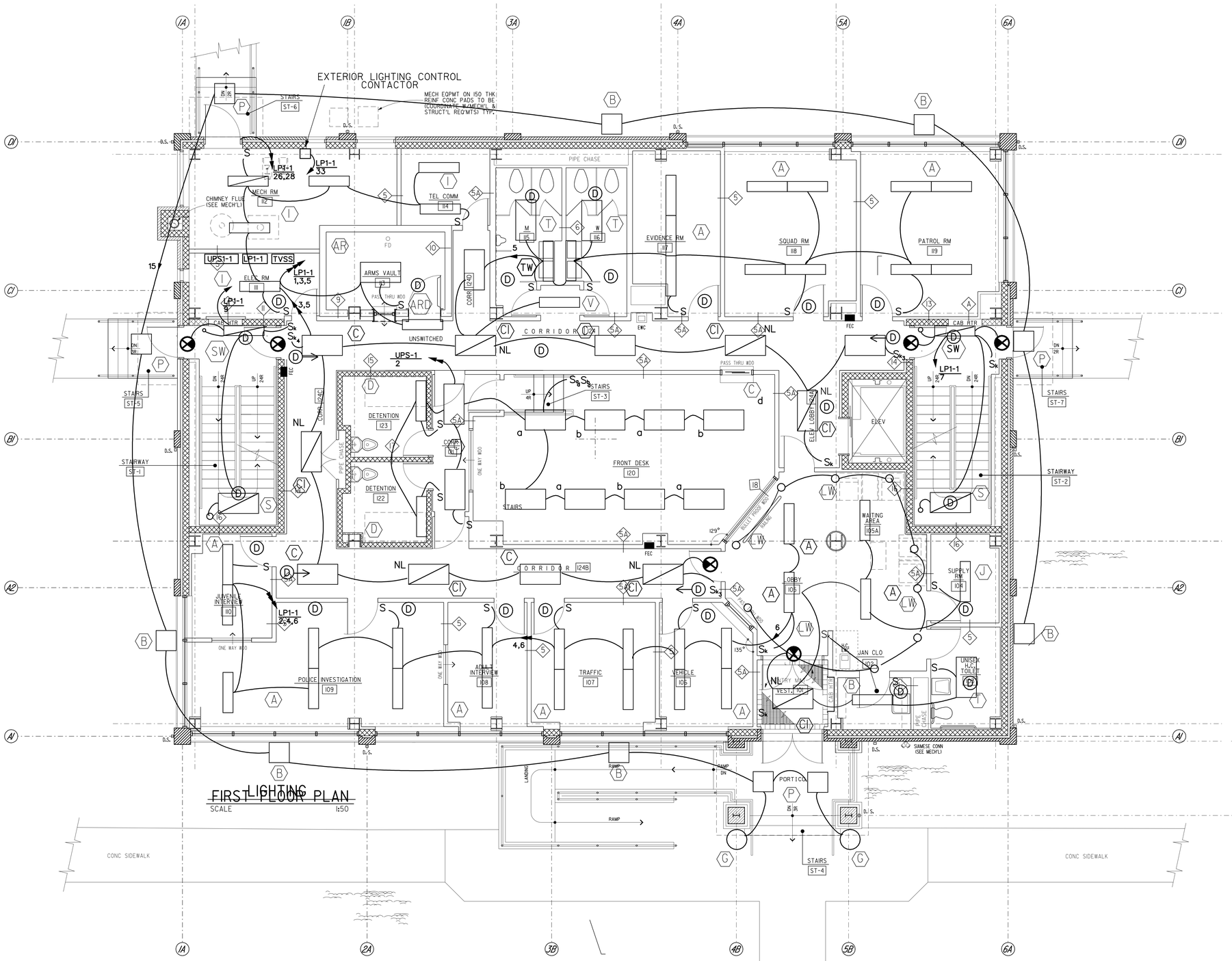


Notes:

1. EXTERIOR LIGHTING FIXTURES SHALL BE CONTROLLED VIA THE H-O-A SWITCH. SEE DETAIL ON SHT. E-601 .

GRAPHIC SCALE

1000mm 0 1M 2M 3M 4M 5M

SCALE 1:50

NOTE: ALL DIMENSIONS SHOWN ARE IN MILLIMETERS.

TRUE NORTH PROJECT NORTH

US Army Corps of Engineers New York District

| Symbol | Description | Date | Appr. |
|---|---|---|---|

| | | | |
|---|---|---|---|
| Designed by: | | Date: | Size: Rev. |
| Dwn by: | Ckd by: | Drawing file no: | |
| Reviewed by: | | Drawing code: | |
| Submitted by: | | Plot date: 05-JAN-2005 16:27 Plot by: eberwein Scale: 1:50(ANSI)(22X33) | |

U.S. ARMY ENGINEER DISTRICT
CORPS OF ENGINEERS
NEW YORK, NEW YORK

File name: S:\Memorial\Military\Fort Hamilton\MPSs\Electrical\MPS6_E-100.dgn

PN 52224
MILITARY POLICE STATION
FORT HAMILTON, NEW YORK

# ELECTRICAL LIGHTING FIRST FLOOR PLAN

Sheet reference number:

E-101

Submitted by: eBendfwa
Sa=Mu=Ge=mi=Ho=pa=ri eberwein@MPS1\soft\electrical\MPS6_E-100.dgn
Plot Date: 05-JAN-2005 16:27

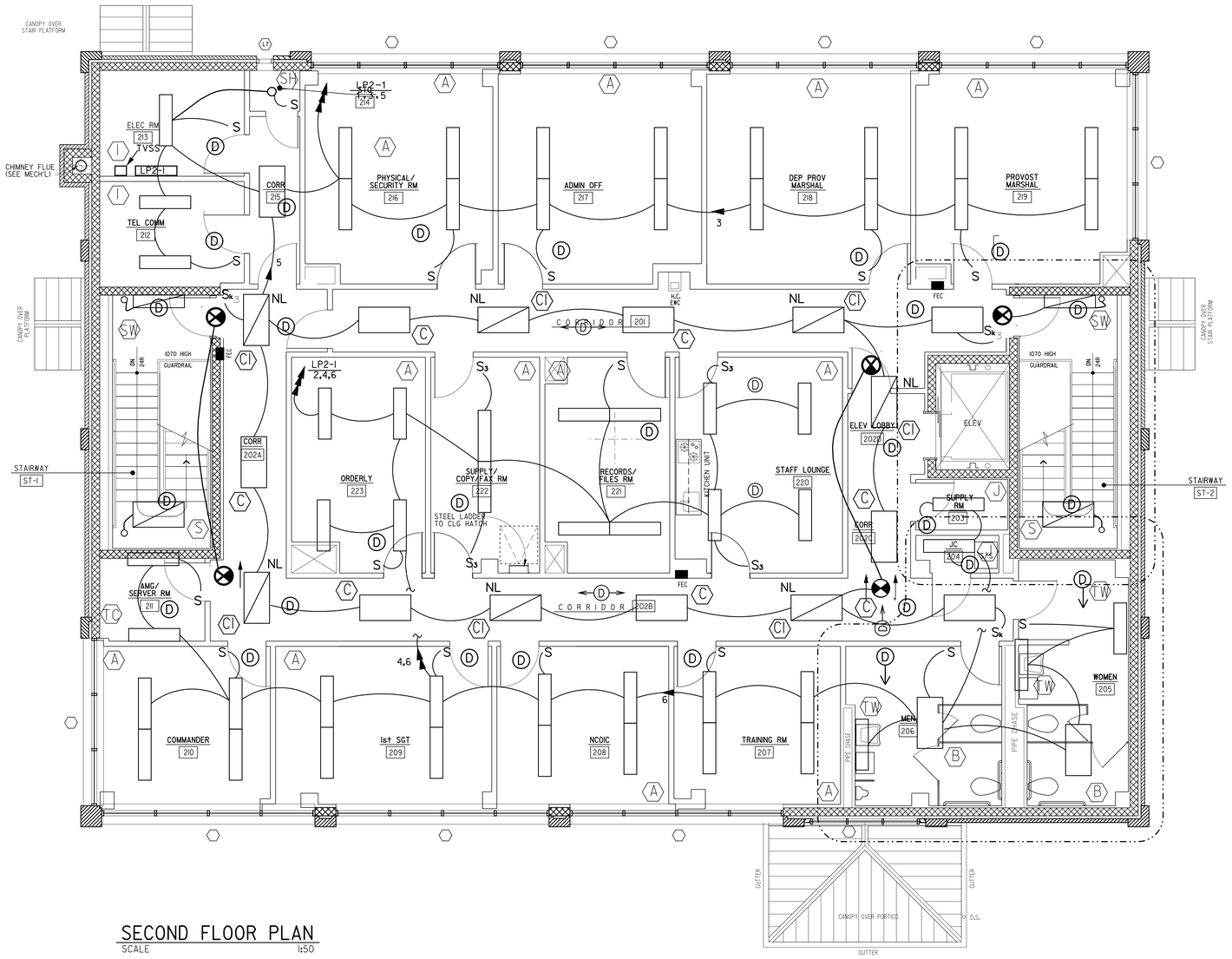


## SECOND FLOOR PLAN

SCALE 1:50

NOTE: ALL DIMENSIONS SHOWN ARE IN MILLIMETERS.

US Army Corps of Engineers
New York District

| Symbol | Description | Date | Appr. |
|---|---|---|---|

| Rev. | Date | Description | Drawn by | Checked by | Approved by |
|---|---|---|---|---|---|

U.S. ARMY ENGINEER DISTRICT
CORPS OF ENGINEERS
NEW YORK, NEW YORK

Designed by: | Date: | Size: | Rev.:
Dwn by: | Ckd by: | Drawing file no.:
Reviewed by: | Drawing code:
Submitted by: | Plot date: 05-JAN-2005 16:27 | Plot by: sdavoches | Scale: 0.0000000000

File name: G:\Monroe\Military\Fort Hamilton\Utility\Drawings\UtilTbs E-102.dgn

PN 52224
MILITARY POLICE STATION
FORT HAMILTON, NY

# ELECTRICAL LIGHTING SECOND FLOOR PLAN

Sheet reference number:
E-102

Plot Dates 05-JAN-2005 16:27
Submitted by: e3endfwb
petitionsdmnt\cgi-pr\dr1 hamiltonpd\Plot\electr\sd\PP3\d E-102.dgn

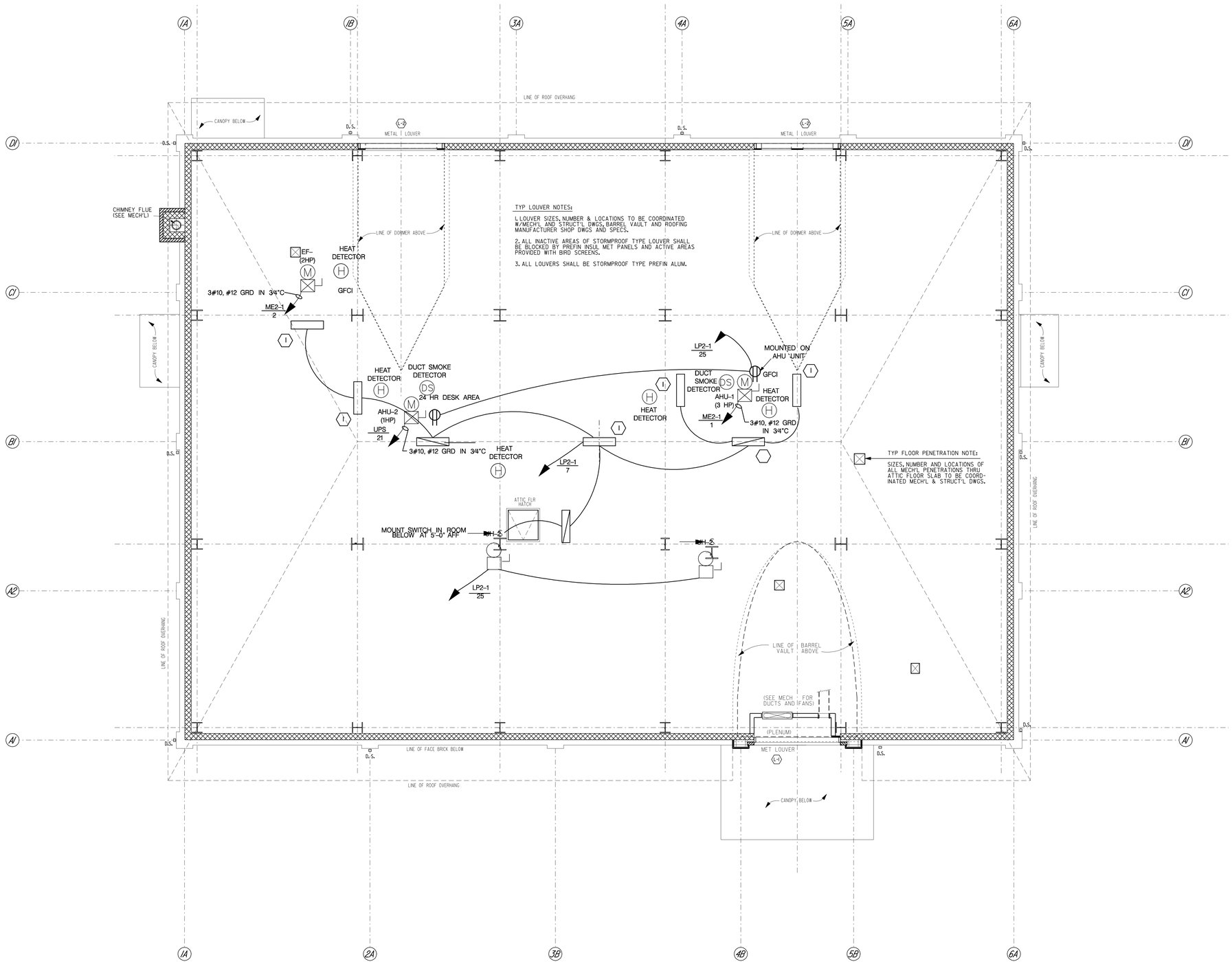


## GRAPHIC SCALE

1000mm 0 1M 2M 3M 4M 5M

SCALE 1:50

NOTE: ALL DIMENSIONS SHOWN ARE IN MILLIMETERS.

TRUE NORTH

PROJECT NORTH

US Army Corps of Engineers
New York District

| Symbol | Description | Date | Appr. |
|---|---|---|---|

U.S. ARMY ENGINEER DISTRICT
CORPS OF ENGINEERS
NEW YORK, NEW YORK

Designed by:
Dwn by:
Ckd by:
Reviewed by:
Submitted by:
Date:
Size:
Rev:
Drawing file no.:
Drawing code:
Plot date: 05-JAN-2005 16:27
Plot by: eberndwb
Plot file: 03-W0100-0000
File name: G:\Benson\military\fort hamilton\MPOs\Division\MPOs E-103.dgn

PN 62224
MILITARY POLICE STATION
FORT HAMILTON, NY

# LIGHTING, POWER & FIRE ALARM SYSTEMS
## ATTIC PLAN

Sheet reference number:
E-103

Submitted by: eberndwb
Plot Date: 05-JAN-2005 16:27
Saffordpenetlouvdwg:\Hamilton\MPOs\Electric\Lighting E-103.dgn

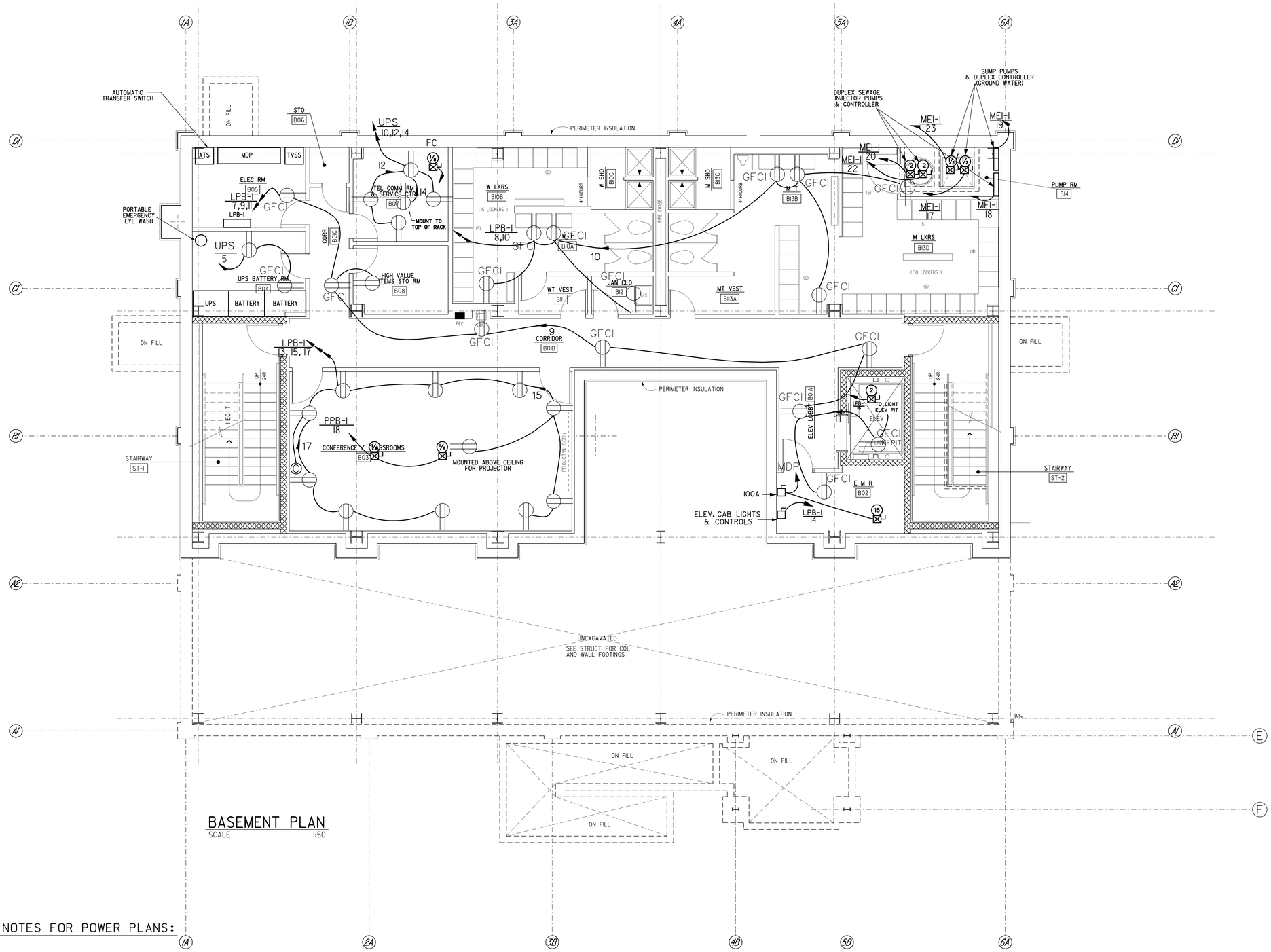


## BASEMENT PLAN

SCALE 1:50

## GENERAL NOTES FOR POWER PLANS:

1. LOCATION OF PANEL BOARDS, SWITCH BOARDS AND TRANSFORMERS IN THE ELECTRICAL ROOMS ARE APPROXIMATE. CONTRACTOR SHALL COORDINATE WITH OTHER WORK.
2. PROVIDE GROUND CONDUCTOR IN ALL RECEPTACLE CIRCUITS. PROVIDE APPLICABLE NUMBER OF WIRES FOR CONTROL AND CIRCUITING SHOWN.
3. ALL RECEPTACLES CIRCUITS SHALL BE PROVIDED WITH A DEDICATED NEUTRAL CONDUCTOR.
4. CONDUIT SHALL NOT BE RUN EXPOSED ALONG BUILDING.

GRAPHIC SCALE

1000mm 0 1M 2M 3M 4M 5M

SCALE 1:50

NOTE: ALL DIMENSIONS SHOWN ARE IN MILLIMETERS.

TRUE NORTH PROJECT NORTH

US Army Corps of Engineers
New York District

| Symbol | Description | Date | Appr. |
|---|---|---|---|

U.S. ARMY ENGINEER DISTRICT
CORPS OF ENGINEERS
NEW YORK, NEW YORK

Designed by: | Date: | Size: | Rev.
Dwn by: | Ckd by: | Drawing file no:
Reviewed by: | Drawing code:
Submitted by: | Plot date: 05-JAN-2005 16:27 | Plot by: admin4ws | Scale: SC1000000000
File name: S:\Services\military\Fort Hamilton\MPPs\Electrical\MPPs E-104.dgn

PN 52224
MILITARY POLICE STATION
FORT HAMILTON, NY

# ELECTRICAL POWER BASEMENT PLAN

Sheet reference number:
E–104

Plot Date: 05-JAN-2005 16:27
Submitted by: admin4ws
Software: microstation v8.0
Hostname: PC-10.0.0.1
File: S:\Services\military\Fort Hamilton\MPPs\Electrical\MPPs E-104.dgn

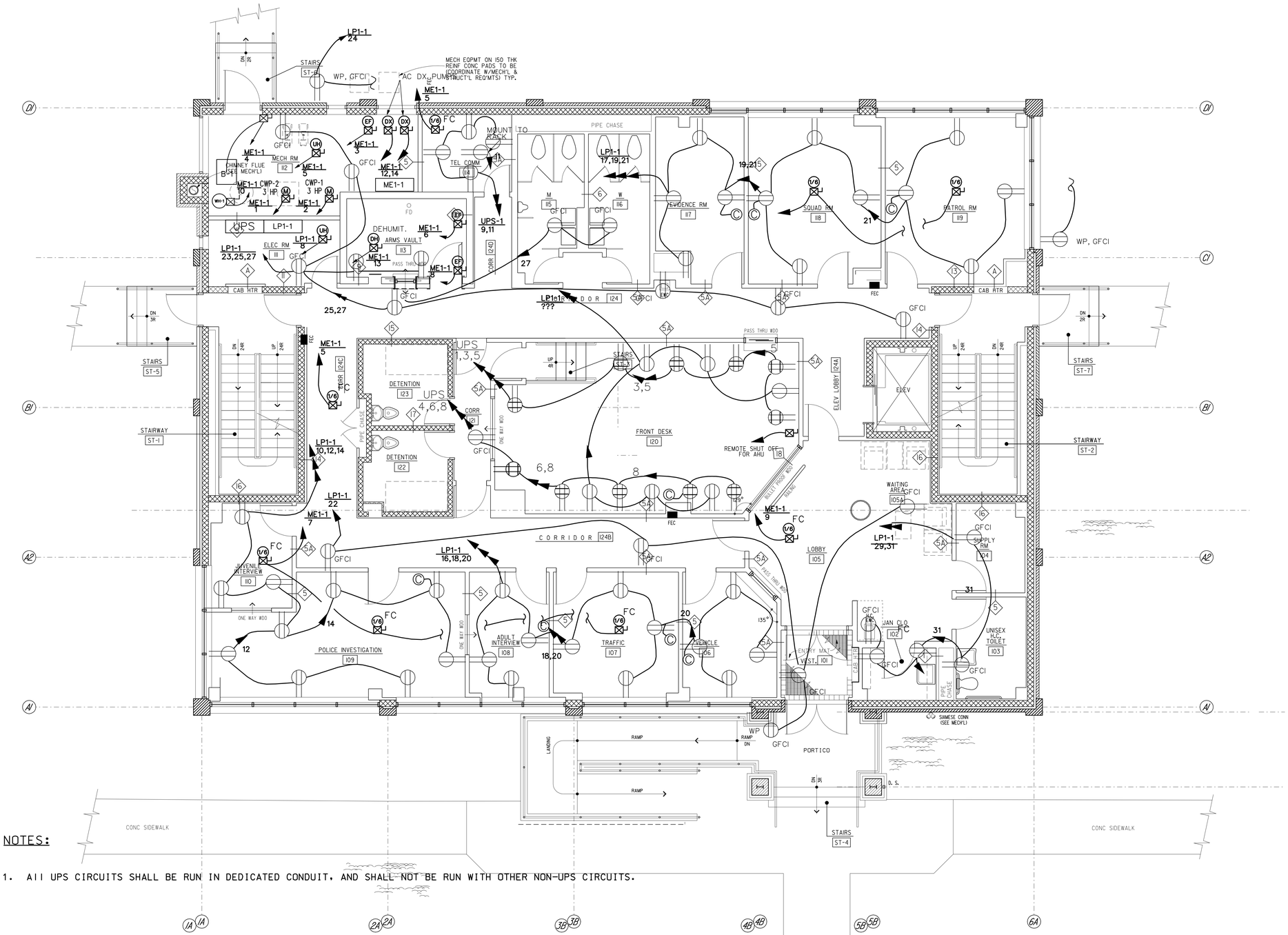


NOTES:

1. All UPS CIRCUITS SHALL BE RUN IN DEDICATED CONDUIT, AND SHALL NOT BE RUN WITH OTHER NON-UPS CIRCUITS.

NOTE: ALL DIMENSIONS SHOWN ARE IN MILLIMETERS.

US Army Corps of Engineers
New York District

U.S. ARMY ENGINEER DISTRICT
CORPS OF ENGINEERS
NEW YORK, NEW YORK

PN 52224
MILITARY POLICE STATION
FORT HAMILTON, NY

# ELECTRICAL POWER FIRST FLOOR PLAN

Sheet reference number:
E-105

Submitted by: eSendra
Submittedentitlepsfdef: kwhitlow@MS1\soft\acad\MS16 E-105.dgn
Plot Date: 05-JAN-2005 16:27

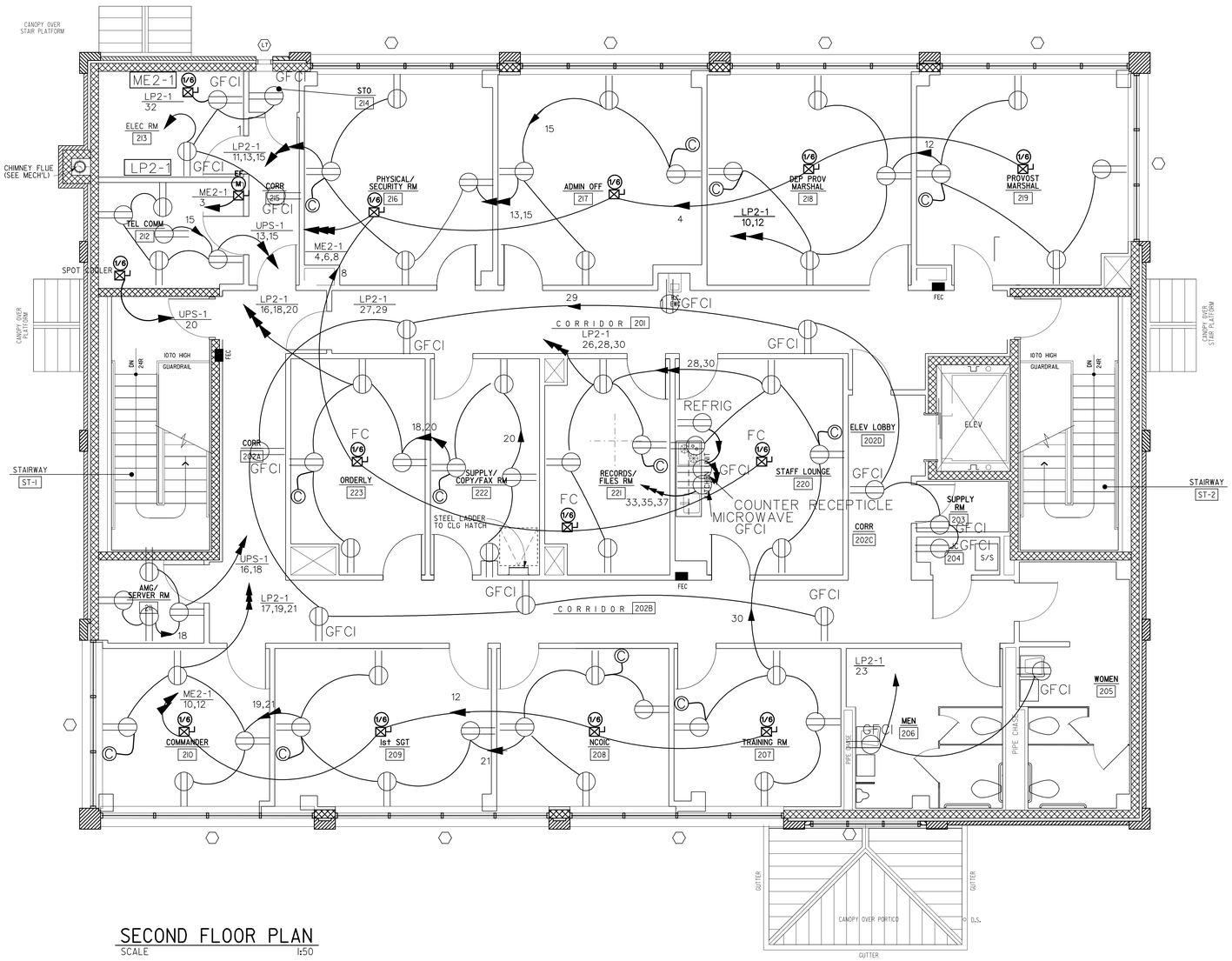


## SECOND FLOOR PLAN

SCALE 1:50

NOTE: ALL DIMENSIONS SHOWN ARE IN MILLIMETERS.

US Army Corps of Engineers
New York District

| Symbol | Description | Date | Appr. |
|---|---|---|---|

U.S. ARMY ENGINEER DISTRICT
CORPS OF ENGINEERS
NEW YORK, NEW YORK

Designed by: | Date: | Size: | Rev.
Dwn by: | Ckd by: | Drawing file no.:
Reviewed by: | Drawing code:
Submitted by: | Plot date: 05-JAN-2005 16:27 | Plot by: edendwo | Scale: SQ-0000010000
File name: S:\Secure\military\Fort Hamilton\MPS\Electrical\MPSs_E-106.dgn

PN 52224
MILITARY POLICE STATION
FORT HAMILTON, NY

# ELECTRICAL POWER
# SECOND FLOOR PLAN

Sheet reference number:
E-106

Submitted by: edendwo
Sattler:dawmilitarysatpt Hamiltonmaxmps:electrical:MPSs_E-106.dgn
Plot Date: 05-JAN-2005 16:27

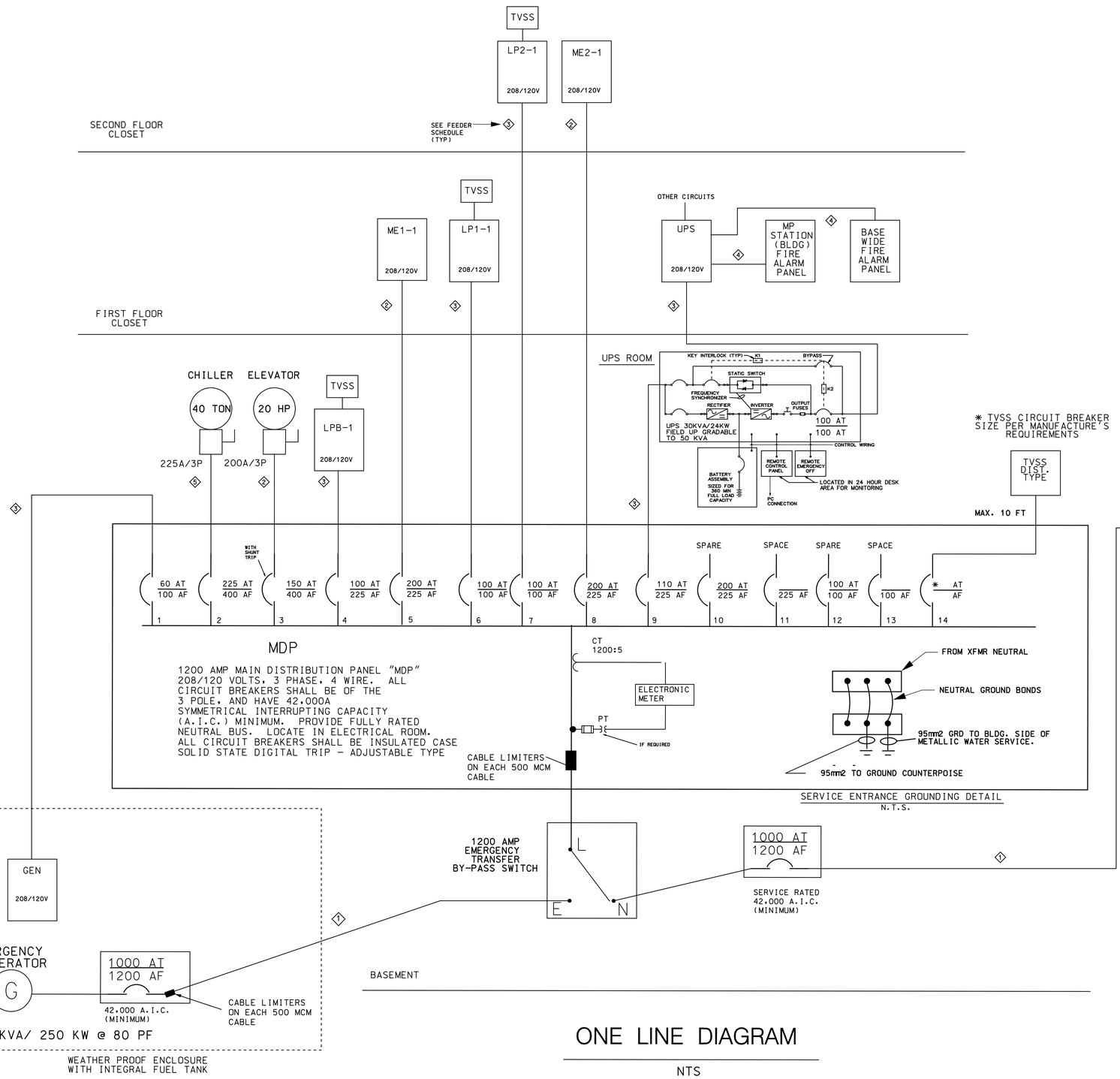


# ONE LINE DIAGRAM

NTS

| FEEDER SCHEDULE | | | | | |
|---|---|---|---|---|---|
| FEEDER NUMBER | NUMBER OF SETS | NUMBER AND PHASE CONDUCTOR SIZE (AWG/KCMIL) | NUMBER AND GROUND CONDUCTOR SIZE (AWG/KCMIL) | CONDUIT SIZE (INCH) METRIC (MM) | REMARKS |
| 1 | 3 | (4) #500 kcmil/ (4) 240mm2 | (1) #3/0 AWG/ 95mm2 AT MDP ONLY | 4 IN/103MM | |
| 2 | 1 | (4) #3/0 AWG/ (4) 95mm2 | (1) 6#AWG/16mm2 | 2-1/2 IN/64MM | |
| 3 | 1 | (3) #1 AWG/ (3) 50 mm2 / (1)✱ #4/0 AWG/ (1) 120mm (NEUTRAL) | (1) #6 AWG/25mm2 | 2-1/2 IN/64MM | 200 % NEUTRAL ✱ OR 2 SETS OF #1 AWG/ 50mm |
| 4 | 1 | (2) #10AWG/ (2) 6mm2 | (1) #12AWG/4mm2 | 3/4 IN/21MM | |
| 5 | 1 | (4) #4/0AWG/ (4) 120mm2 | (1) #4AWG/25mm2 | 2-1/2 IN/64MM | |

## ONE LINE DIAGRAM NOTES:

1. FUSE SIZES SHALL BE PER MANUFACTURER'S REQUIREMENTS.

2. EQUIPMENT LAYOUT IS BASED ON SELECTION OF SUITABLE EQUIPMENT TO ENSURE THAT THERE IS THE REQUIRED CLEARANCE OF 900MM (PER NEC ART 110-16) IN FRONT OF ALL EQUIPMENT. REARRANGEMENT OF EQUIPMENT MAY BE REQUIRED.

3. THE SIZES OF CIRCUIT BREAKERS ARE BASED ON THE EQUIPMENT ANTICIPATED. IF LARGER EQUIPMENT IS SUPPLIED. THEN LARGER TRIP. FRAME. CONDUCTORS AND CONDUIT SIZES WILL BE REQUIRED AT NO ADDITIONAL COST TO THE GOVERNMENT.

4.MDP SHALL BE PROVIDED WITH PULL SECTION. MDP INSTALLATION SHALL BE APPROVED BY AND MEET THE LOCAL UTILITY'S REQUIREMENTS.5. PROVIDE TVSS (TRANSIENT VOLTAGE SURGE SUPPRESSION). PROTECTION MAY BE INTEGRAL WITH PANELBOARD OR IN A SEPARATE ENCLOSURE. TVSS SHALL HAVE A MAXIMUM LET THROUGH VOLTAGE OF 400 VOLTS WHEN TEST IN ACCORDANCE WITH UL 1449 AND 470 VOLTS WHEN TESTED IN ACCORDANCE WITH ANSI/IEEE C62.41 CATEGORY C3 IMPULSE. SURGE WITHSTAND CURRENT PER PHASE SHALL BE A MINIMUM 65,000 AMPS FOR AN (8x20uS) WAVE. RESPONSE TIME SHALL BE LESS THAN 1 NANO SECOND. THE TVSS SHALL PROVIDE 50dB ATTENUATION AT 100KHZ. THE UNIT SHALL BE PROVIDED WITH COORDINATED OVER LOAD PROTECTION. PROVIDE CONDUCTOR AND CIRCUIT BREAKER PER MANUFACTURE'S REQUIREMENTS.

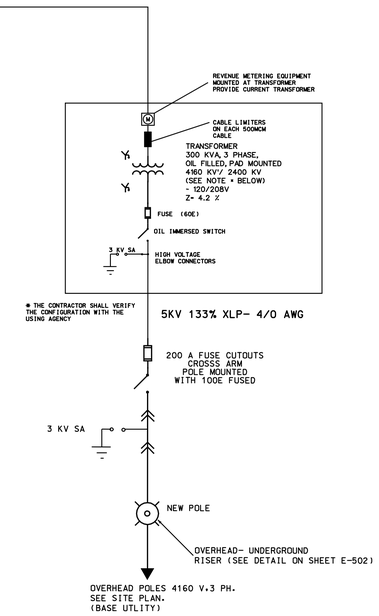


NOTE: ALL DIMENSIONS SHOWN ARE IN MILLIMETERS.

US Army Corps of Engineers
New York District

| Symbol | Description | Date | Appr. |
|---|---|---|---|

U.S. ARMY ENGINEER DISTRICT
CORPS OF ENGINEERS
NEW YORK, NEW YORK

Designed by: | Date: | Size: | Rev:
Dwn by: | Ckd by: | Drawing file no.:
Reviewed by: | Drawing code:
Submitted by: | Plot date: 05-JAN-2005 16:27 | Plot by: adenhwb | Path: S:\Mission\military\Fort Hamilton\MPSs\Electrical\MPSs E-500.dgn
File name: S:\Mission\military\Fort Hamilton\MPSs\Electrical\MPSs E-500.dgn

PN 92224
MILITARY POLICE STATION
FORT HAMILTON, NY

ELECTRICAL
ONE LINE DIAGRAM

Sheet reference number:
E-500

Submitted by: adenhwb
Plot Date: 05-JAN-2005 16:27
S:\Mission\military\Fort Hamilton\MPSs\Electrical\MPSs E-500.dgn

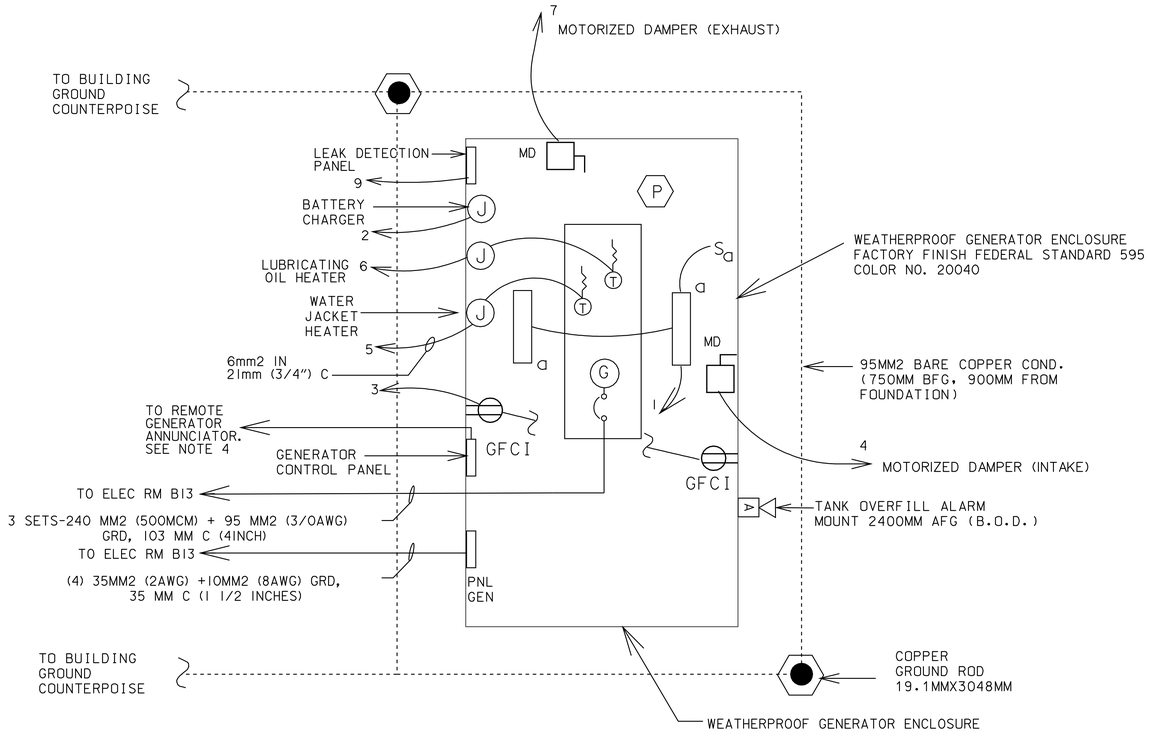


GENERATOR POWER AND LIGHTING PLAN

SCALE 1:50

PANEL GEN 208/120 VOLTS, 3 PHASES, 4 WIRE, 60 AMPS MAIN CIRCUIT BREAKER
SURFACE MOUNTED; ALL CIRCUIT BREAKERS 10,000 AIC, 100 AMP FRAME 18 POLES
LOCATION: GENERATOR ENCLOSURE

1 GROUND BAR
--
--
--

| EQUIPMENT SERVED | ROOM NO. | CONN. KVA | TRIP AMPS | P | CKT. NO. | PH | CKT. NO. | P | TRIP AMPS | CONN. KVA | ROOM NO. | EQUIPMENT SERVED |
|---|---|---|---|---|---|---|---|---|---|---|---|---|
| LIGHTING | GENERATOR ENCLOSURE | 0.2 | 20 | 1 | 1 | A | 2 | 1 | 20 | 1.4 | GENERATOR ENCLOSURE | BATTERY CHARGER |
| RECEPTACLES | | 0.4 | | | 3 | B | 4 | | | 0.7 | | MOTORIZED DAMPER (INTAKE) |
| WATER JACKET HEATER | | 2.0 | 30 | | 5 | C | 6 | | | 1.0 | | LUBRICATING OIL HEATER |
| MOTORIZED DAMPER (EXHAUST) | | 0.3 | 20 | | 7 | A | 8 | | | | | SPACE |
| LEAK DETECTION PANEL | | 0.1 | | | 9 | B | 10 | | | | | |
| SPARE | | | | | 11 | C | 12 | | | | | |
| | | | | | 13 | A | 14 | | | | | |
| | | | | | 15 | B | 16 | | | | | |
| SPACE | | | | | 17 | C | 18 | | | | | |

TOTAL CONNECTED KVA 6.1

NOTES:

1. WIRING FROM BATTERY CHARGER TO BATTERY SHALL BE 105 C WIRING.
2. PROVIDE A MINIMUM 1 METER SAFETY AND WORKING CLEARANCE AROUND GENERATOR AND ELECTRICAL EQUIPMENT.
3. SEE SHT. E-500 FOR PANEL AND GENERATOR FEEDER AND BREAKER SIZES.
4. PROVIDE REMOTE GENERATOR ANNUNCIATOR IN MAIN BUILDING 24 HOUR DESK AREA. ROUTE ALL WIRING IN CONDUIT. WIRING SHALL BE IN ACCORDANCE WITH MANUFACTURER REQUIREMENT.
5. FOR ADDITIONAL GROUNDING DETAILS SEE SHEET E-802.
6. PROVIDE LOW TEMP LIGHTING FIXTURE BALLAST.

NOTE: ALL DIMENSIONS SHOWN ARE IN MILLIMETERS.

US Army Corps of Engineers
New York District

Symbol | Description | Date | App.

U.S. ARMY ENGINEER DISTRICT
CORPS OF ENGINEERS
NEW YORK, NEW YORK

Designed by: | Date: | Size: | Rev.:
Dwn by: | Ckd by: | Drawing file no.:
Reviewed by: | Drawing code:
Submitted by: | Pnt date: 05-JAN-2006 16:28 | Plot by: admindw | Plot Scale: 0.0000x0.0000
File name: S:\Benson\military\fortbenton\MPBs\Division2\MPBs E-500.dgn

PN 52224
MILITARY POLICE STATION
FORT HAMILTON NY
GENERATOR – POWER & LIGHTING PLAN

Sheet reference number:
E–501

Submitted by: e3endfab
Plot Date: 05-JAN-2005 16:28
S:\fortbenton\pwfort hamilton\pdf\Electrical\E-501.dgn

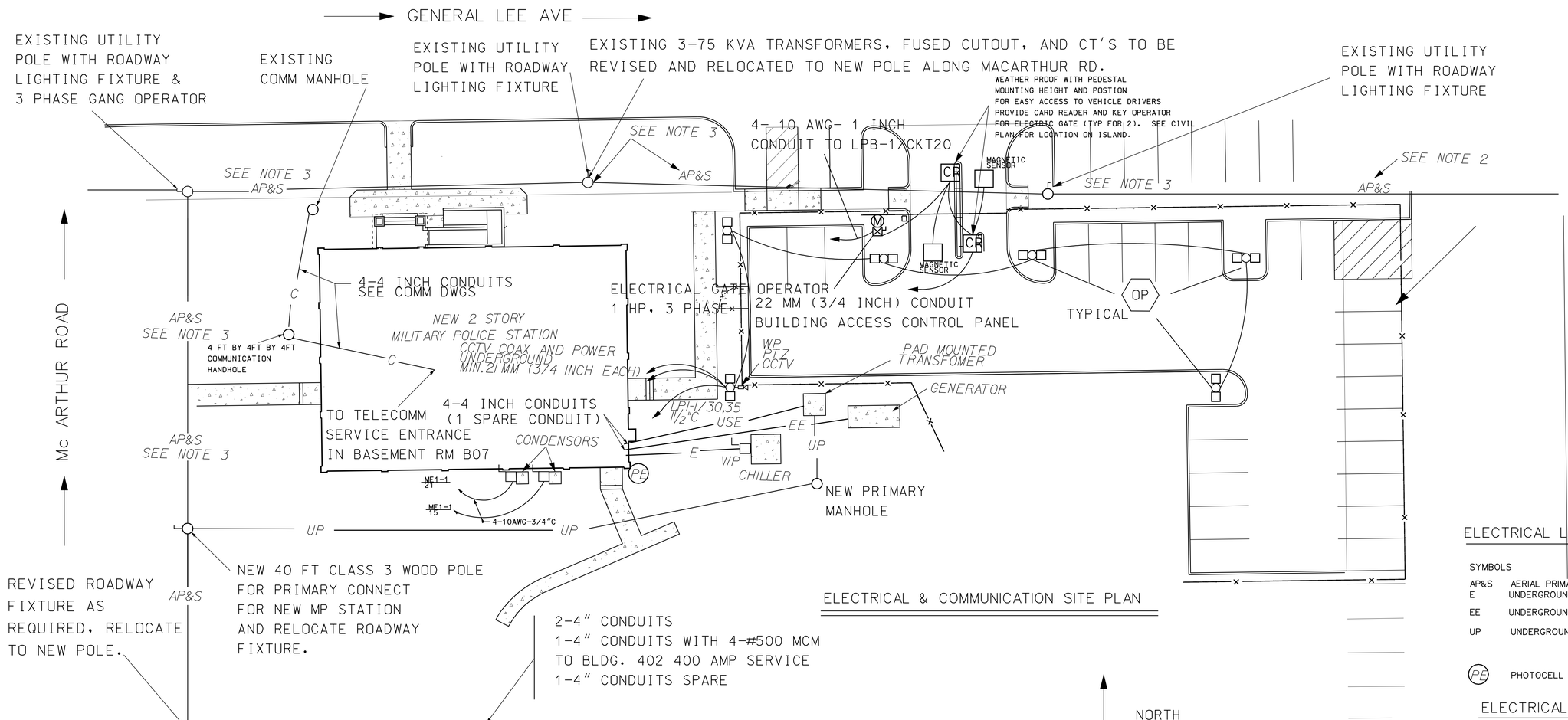


ELECTRICAL & COMMUNICATION SITE PLAN

## ELECTRICAL LEGEND:

SYMBOLS

| | |
|---|---|
| AP&S | AERIAL PRIMARY & SECONDARDY ELECTRICAL |
| E | UNDERGROUND ELECTRICAL |
| EE | UNDERGROUND EMERGENCY ELECTRICAL |
| UP | UNDERGROUND PRIMARY |
| PE | PHOTOCELL MOUNTED ON BUILDING |

## ELECTRICAL NOTES:

1. ALL WORK SHOWN IS NEW UNLESS OTHERWISE NOTED.
2. FOR ELECTRICAL REMOVALS SEE CIVIL DEMOLITION DRAWINGS
3. THE CONTRACTOR SHALL EXTEND AERIAL SECONDARDY SERVICE FOR THE RELOCATED 3-75 KVA TRANSFORMERS ALONG Mc ARTHUR ROAD TO GENERAL LEE AVE. USING MIN. #6 AWG CONDUCTOR TO RECONNECT STREET LIGHTING AND OTHER SERVICES ON GENERAL LEE AVE.

EXISTING POLE WITH PRIMARY & SECONDARY
REPLACE WITH NEW 40 FT CLASS 2 WOOD POLE

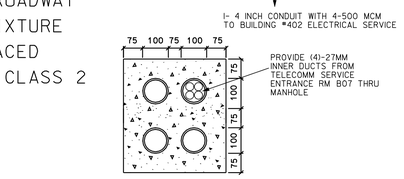


4 - 103MM CONDUIT (PVC) ENCASED DUCTBANK
N.T.S.
TOP OF DUCT MIN. 36 INCH BELOW GRADE

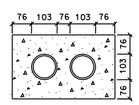


2 - 103MM CONDUIT (PVC) ENCASED DUCTBANK
N.T.S.
SECTIONS OF CONCRETE ENCASED PVC DUCT ALL UNITS ARE IN MILLIMETERS
TOP OF DUCT MIN. 36 INCH BELOW GRADE

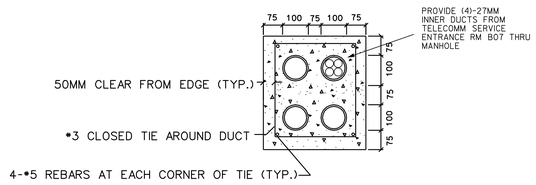


4 - 103MM CONDUIT (PVC) ENCASED DUCTBANK WITH REINFORCEMENT
N.T.S.
TOP OF DUCT MIN. 36 INCH BELOW GRADE

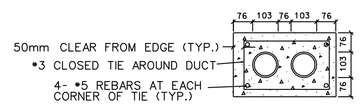


2 - 103MM CONDUIT (PVC) ENCASED DUCTBANK WITH REINFORCEMENT
N.T.S.
TOP OF DUCT MIN. 36 INCH BELOW GRADE

DUCTBANK NOTE:

1. PROVIDE REINFORCEMENT FOR DUCTS UNDER ROADWAYS & PARKING AREAS

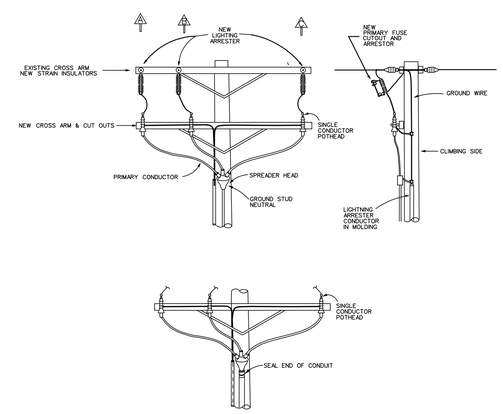


OVERHEAD TO UNDERGROUND TRANSITION
N.T.S.

NEW POLE PRIMARY CONNECTION

## ELECTRICAL & COMMUNICATION DUCTS

THE CONTRACTOR MAY USE RIGID STEEL PVC COATED CONDUITS IN LIEU OF DUCT BANK IN NON-TRAFFIC AREAS.

NOTE: ALL DIMENSIONS SHOWN ARE IN MILLIMETERS.

US Army Corps of Engineers
New York District

| Symbol | Description | Date | Appr. |
|---|---|---|---|

| Rev. | Size | Date: | Designed by: | Civil by: | Reviewed by: | Submitted by: |
|---|---|---|---|---|---|---|
| | | Drawing file no: | Dwn by: | | | |
| | | Drawing code: | | | | |
| | | Plot date: 05-JAN-2006 16:28 | | | | |
| | | Plot for: eSheets | | | | |
| | | Scale: 1:0.0000000000000 | | | | |

U.S. ARMY ENGINEER DISTRICT
CORPS OF ENGINEERS
NEW YORK, NEW YORK

File name: S:\Services\military\Fort Hamilton\MPSs\Electrical\MPSs E-502.dgn

PN 82224
MILITARY POLICE STATION
FORT HAMILTON, NY

ELECTRICAL & COMMUNICATIONS SITE PLAN

Sheet reference number:
E-502

Plot Date: 05-JAN-2005 16:28
Submitted by: eSheetPro
Saf:Fort Hamilton:Fort Hamilton:MPSs:Electrical:MPSs E-502.dgn

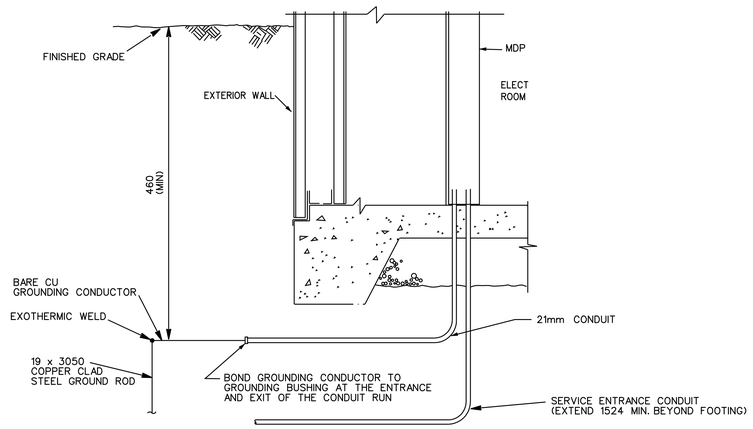


## ELECTRICAL SERVICE ENTRANCE AND GROUNDING DETAIL - UNDERGROUND

N. T. S.

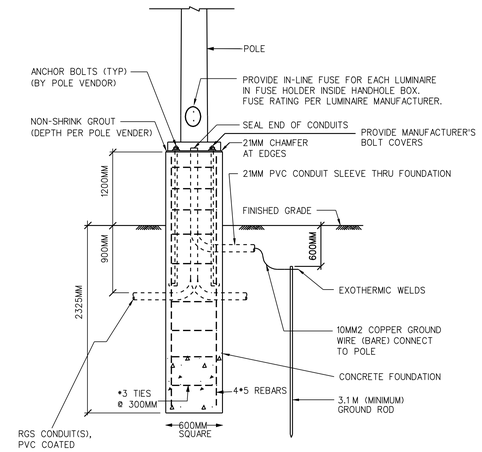


## POLE FOUNDATION DETAIL

NTS

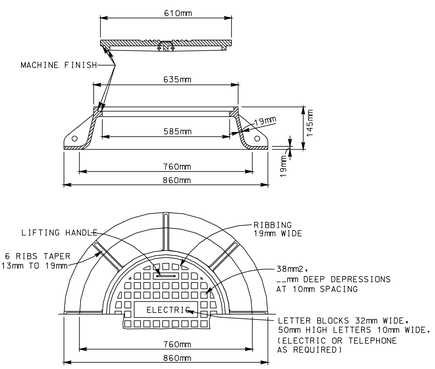


## PULLBOX/HANDHOLE FRAME AND COVER DETAILS

N.T.S.

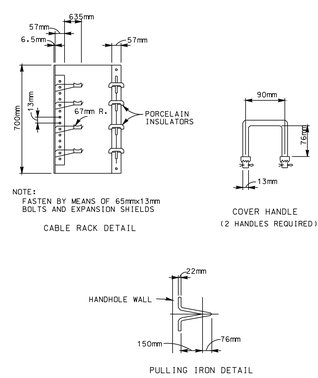


## PULLBOX/HANDHOLE ACCESSORIES

N.T.S.

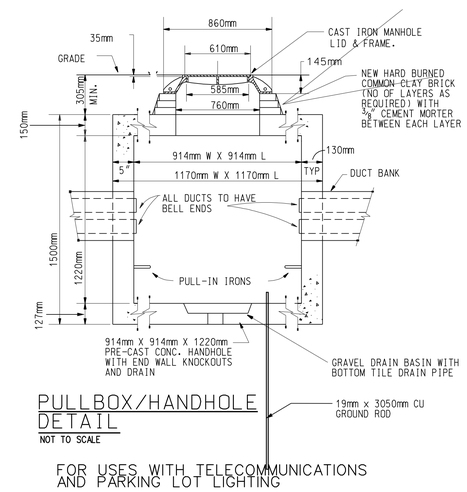


## PULLBOX/HANDHOLE DETAIL

NOT TO SCALE

FOR USES WITH TELECOMMUNICATIONS AND PARKING LOT LIGHTING

NOTE: ALL DIMENSIONS SHOWN ARE IN MILLIMETERS.

US Army Corps of Engineers
New York District

| Symbol | Description | Date | Appr. |
|---|---|---|---|

U.S. ARMY ENGINEER DISTRICT
CORPS OF ENGINEERS
NEW YORK, NEW YORK

Designed by:
Dwn by: Ckd by:
Reviewed by:
Submitted by:
Date:
Drawing file no.:
Drawing code:
Plot date: 05-JAN-2005 16:28
Plot by: edsmith
Size: Rev.:
File name: S:\Benson\military\fortHamilton\MPBs\Electrical\MPBs E-503.dgn

PN 52224
MILITARY POLICE STATION
FORT HAMILTON, NY

ELECTRICAL DETAILS

Sheet reference number:
E–503

Submitted by: e3smith
Plot Date: 05-JAN-2005 16:28
Saltfleetsmithburgeff HamiltonMPBs\Electrical\MPBs E-503.dgn

| PANEL LPB-1 208/120 VOLTS, 3 PHASES, 4 WIRE, 100 AMPS MLO<br>SURFACE MOUNTED; ALL CIRCUIT BREAKERS 22K AIC, 100 AMP FRAME 42 POLES<br>LOCATION: ELECTRICAL ROOM BASEMENT | | | | | | | | | | | | I GROUND BUS<br>200 % RATED NEUTRAL<br>ISOLATED GRD BUS<br>-- |
|---|---|---|---|---|---|---|---|---|---|---|---|---|
| EQUIPMENT SERVED | ROOM NO. | CONN. KVA | TRIP AMPS | P | CKT. NO. | PH | CKT. NO. | P | TRIP AMPS | CONN. KVA | ROOM NO. | EQUIPMENT SERVED |
| IIGHTING | B04,B05,B06,B07 | 0.4 | 15 | 1 | 1 | A | 2 | 1 | 15 | 0.4 | B08,B08A,B08B,B09 | IIGHTING |
| | B01A,B01B,B01C,B02 | 0.6 | | | 3 | B | 4 | | | 0.3 | B10-B14 | |
| | B03 | 0.4 | | | 5 | C | 6 | | | 0.5 | B15,B15A,B15B | |
| RECEPTACLES | B01B,B01C,B06,B09 | 0.7 | 20 | | 7 | A | 8 | | 20 | 1.0 | B08A | RECP,HAIR DRYERS |
| RECEPTACLES | B01B,B01A,B02 | 0.7 | | | 9 | B | 10 | | | 1.0 | B15A | RECP,HAIR DRYERS |
| RECEPT, LIGHTING | ELEV PIT | 0.2 | | | 11 | C | 12 | | | | | |
| PC, RECEPT | B03 | 0.7 | | | 13 | A | 14 | | 20 | 0.5 | EMR B02 | ELEV. CAB LIGHTS |
| PC, RECEPT | B03 | 0.5 | | | 15 | B | 16 | 3 | 20 | 2.0 | ELEVATOR PIT | SUMP PUMP |
| PC, RECEPT | B03 | 0.8 | | | 17 | C | | | | | | |
| TVSS | | | SEE NOTE 4 | 3 | 19 | A | | | | | | |
| | | | | | | B | 18 | 1 | 20 | | | SPARE |
| | | | | | | C | 20 | 3 | 20 | 2.0 | EXTERIOR | GATE OPERATOR |
| SPACE | | | | | 21 | A | | | | | | |
| | | | | | 23 | B | | | | | | |
| | | | | | 25 | C | 22 | 1 | | | | SPACE |
| | | | | | 27 | A | 24 | | | | | |
| | | | | | 29 | B | 26 | | | | | |
| | | | | | 31 | C | 28 | | | | | |
| | | | | | 33 | A | 30 | | | | | |
| | | | | | 35 | B | 32 | | | | | |
| | | | | | 36 | C | 34 | | | | | |
| | | TOTAL CONNECTED KVA | | | | | 12.7 | | | | | |

| PANEL LP1-1 208/120 VOLTS, 3 PHASES, 4 WIRE, 100AMPS MAIN CIRCUIT BREAKER<br>SURFACE MOUNTED; ALL CIRCUIT BREAKERS 22K AIC, 100 AMP FRAME 42 POLES<br>LOCATION: ELECTRICAL CLOSET FIRST FLOOR | | | | | | | | | | | | I GROUND BUS<br>200 % RATED NEUTRAL<br>ISOLATED GRD BUS<br>-- |
|---|---|---|---|---|---|---|---|---|---|---|---|---|
| EQUIPMENT SERVED | ROOM NO. | CONN. KVA | TRIP AMPS | P | CKT. NO. | PH | CKT. NO. | P | TRIP AMPS | CONN. KVA | ROOM NO. | EQUIPMENT SERVED |
| IIGHTING | 111-114 | 0.5 | 15 | 1 | 1 | A | 2 | 1 | 15 | 0.6 | 108-110 | IIGHTING |
| | 124,124A-124D | 0.9 | | | 3 | B | 4 | | | 0.5 | 106,107 | |
| | 115-119 | 1.0 | | | 5 | C | 6 | | | 0.6 | 101-105 | |
| | East Stairs | 0.4 | | | 7 | A | 8 | | 20 | 1.0 | 111 | UH- |
| | WEST STAIRS | 0.4 | | | 9 | B | 10 | | | 0.7 | 110 | PC,RECP |
| SPARE | | | 20 | | 11 | C | 12 | | | 0.7 | 109 | |
| SPARE | | | | | | A | 14 | | | 0.7 | 109 | |
| SPARE | | | | | 13 | B | 16 | | | 0.8 | 108 | |
| SPARE | | | | | | C | 18 | | | 0.8 | 107 | |
| SPARE | | | 20 | | 15 | A | 20 | | | 0.8 | 106 | |
| PC,RECP | 117 | 0.8 | 20 | | 17 | B | 22 | | | 0.9 | 101,124B,EXT | RECEPTACLES |
| PC,RECP | 118 | 0.8 | | | 19 | C | 24 | | | 0.4 | EXTERIOR | RECEPTACLES |
| PC,RECP | 119 | 0.8 | | | 21 | A | 26 | 2 | | 1.7 | BUILDING PERIMETER | EXT. BLDG LIGHTING |
| RECEPTACLES | 111,112,113 | 0.7 | | | 23 | B | | | | | | |
| RECEPTACLES | 124 | 0.7 | | | 25 | C | 28 | 2 | | 1.4 | BUILDING PERIMETER | EXT. BLDG LIGHTING |
| RECEPTACLES | 115,116 | 1.0 | | | 27 | A | | | | | | |
| EWC | 105 | 1.0 | | | 29 | B | 30 | 2 | | 2.4 | LOT | PARKING LOT LIGHTING |
| RECEPTACLES | 101,102,103 | 0.5 | | | 31 | C | | | | | | |
| LIGHTING CONTROL | 112 | 0.5 | | | 33 | A | 32 | 3 | SEE NOTE 4 | | | TVSS |
| PARKING LOT LIGHTING | LOT | 2.4 | 20 | 2 | 35 | B | | | | | | |
| | | | | | | C | | | | | | |
| | | TOTAL CONNECTED KVA | | | | | 26.4 | | | | | |

| PANEL UPS 208/120 VOLTS, 3 PHASES, 4 WIRE, 100 AMPS MAIN CIRCUIT BREAKER<br>SURFACE MOUNTED; ALL CIRCUIT BREAKERS 22K AIC, 100 AMP FRAME 42 POLES<br>LOCATION: FIRST FLOOR ELECTRICLA CLOSET | | | | | | | | | | | | I GROUND BUS<br>200 % RATED NEUTRAL |
|---|---|---|---|---|---|---|---|---|---|---|---|---|
| EQUIPMENT SERVED | ROOM NO. | CONN. KVA | TRIP AMPS | P | CKT. NO. | PH | CKT. NO. | P | TRIP AMPS | CONN. KVA | ROOM NO. | EQUIPMENT SERVED |
| RECEPTACLES | FRONT DESK 120 | 0.5 | 20 | 1 | 1 | A | 2 | 1 | 15 | 1.0 | FRONT DESK 120 | LIGHTING |
| RECEPTACLES | FRONT DESK 120 | 0.5 | | | 3 | B | 4 | | 20 | 0.6 | FRONT DESK 120,121 | RECEPTACLES |
| CCTV RECEPT | FRONT DESK 120 | 0.5 | | | 5 | C | 6 | | | 1.0 | FRONT DESK 120 | MOTOROLA RECEPT |
| SPARE | | | | | 7 | A | 8 | | | 1.0 | FRONT DESK 120 | MOTOROLA RECEPT |
| RECEPTACLES | TEL COMM RM 114 | 0.7 | | | 9 | B | 10 | | | 0.5 | MAIN COMM RM B05 | RECEPTACLES |
| EQUIP RACK | TEL COMM RM 114 | 1.0 | | | 11 | C | 12 | | | 0.5 | MAIN COMM RM B05 | RECEPTACLES |
| RECEPTACLES | TEL COMM RM 212 | 0.7 | | | 13 | A | 14 | | | 1.0 | MAIN COMM RM B05 | EQUIP RACKS |
| EQUIP RACK | TEL COMM RM 212 | 1.0 | | | 15 | B | 16 | | | 0.8 | SERVER RM 211 | PC, RECEPT |
| BASE WIDE FIRE ALARM PANEL | FRONT DESK 120 | 2.0 | 30 L | 2 | 17 | C | 18 | | | 0.8 | SERVER RM 211 | PC, RECEPT |
| | | | | | | A | 20 | | | 0.5 | TEL COMM RM 212 | SPOT COOLER |
| MP STATION (BLDG) FIRE ALARM PANEL | FRONT DESK 120 | 2.0 | 30 L | 2 | 19 | B | 22 | | | | | SPARE |
| | | | | | | C | 24 | 3 | | | | SPARE |
| AHU-2 | ATTIC (SERVING 24 HR DESK AREA) | 1.0 | 20 | 3 | 21 | A | | | | | | |
| | | | | | | B | | | | | | |
| | | | | | | C | 26 | | | | | SPARE |
| SPARE | | | 20 | | 23 | A | 28 | | | | | |
| SPARE | | | 20 | | 25 | B | 30 | | | | | |
| SPACE | | | | | 27 | C | 32 | | | | | |
| | | | | | 29 | A | 34 | | | | | |
| | | | | | 31 | B | 36 | | | | | |
| | | | | | 33 | C | 38 | | | | | |
| | | TOTAL CONNECTED KVA | | | | | 17.75 | | | | | |

| PANEL LP2-1 208/120 VOLTS, 3 PHASES, 4 WIRE, 100 AMPS MAIN CIRCUIT BREAKER<br>SURFACE MOUNTED; ALL CIRCUIT BREAKERS 22K AIC, 100 AMP FRAME 42 POLES<br>LOCATION: ELECTRICAL CLOSET 2ND FLOOR | | | | | | | | | | | | I GROUND BUS<br>200 % RATED NEUTRAL<br>ISOLATED GRD BUS<br>-- |
|---|---|---|---|---|---|---|---|---|---|---|---|---|
| EQUIPMENT SERVED | ROOM NO. | CONN. KVA | TRIP AMPS | P | CKT. NO. | PH | CKT. NO. | P | TRIP AMPS | CONN. KVA | ROOM NO. | EQUIPMENT SERVED |
| LIGHTING | 212,213,215,216,217 | 0.9 | 15 | 1 | 1 | A | 2 | 1 | 15 | 1.0 | 220-223 | LIGHTING |
| | 218,219 | 0.5 | | | 3 | B | 4 | | | 1.0 | 208-211 | |
| | 201,202A,202B,202C | 1.0 | | | 5 | C | 6 | | | 0.7 | 203-207 | |
| | ATTIC | 0.1 | | | 7 | A | 8 | | | | | SPARE |
| SPARE | | | 20 | | 9 | B | 10 | | 20 | 0.8 | 218 | PC,RECEP |
| PC,RECEP | 216 | 0.8 | | | 11 | C | 12 | | | 0.8 | 219 | |
| | 217 | 0.7 | | | 13 | A | 14 | | | | | SPARE |
| | 217 | 0.7 | | | 15 | B | 16 | | | 0.8 | 223 | PC,RECEP |
| | COMR 210 | 0.8 | | | 17 | C | 18 | | | 1.0 | 222 | COPIER |
| | 209 | 0.8 | | | 19 | A | 20 | | | 0.4 | 222 | FAX, RECEP |
| | 208 | 0.8 | | | 21 | B | 22 | | | | | SPARE |
| RECEPTACLES | RESTROOMS 205&206 | 1.0 | | | 23 | C | 24 | 3 | SEE NOTE 4 | | | TVSS |
| | ATTIC | 0.4 | | | 25 | A | | | | | | |
| | 201,202A,202B | 0.9 | | | 27 | B | | | | | | |
| | 201,202A,203,204 | 0.9 | | | 29 | C | 26 | 1 | 20 | 0.8 | 221 | PC,RECEP |
| MICROWAVE | | 0.9 | | | 31 | A | 28 | | | 0.8 | 220 | |
| REFRIG | | 0.9 | | | 33 | B | 30 | | | 0.8 | 207 | |
| COUNTER | | 0.9 | | | 35 | C | 32 | | | 0.5 | ELECT 213 | RECEPTACLES |
| SPARE | | | | | 37 | A | 34 | | | | | SPACE |
| | | | | | 39 | B | 36 | | | | | |
| | | | | | 41 | C | 38 | | | | | |
| | | TOTAL CONNECTED KVA | | | | | 22.4 | | | | | |

| PANEL ME1-1 208/120 VOLTS, 3 PHASES, 4 WIRE, 200 AMPS MAIN CIRCUIT BREAKER<br>SURFACE MOUNTED; ALL CIRCUIT BREAKERS 22K AIC, 225 AMP FRAME 42 POLES<br>LOCATION: ELECTRICAL CLOSET FIRST FLOOR | | | | | | | | | | | | I GROUND BUS<br>100 % RATED NEUTRAL |
|---|---|---|---|---|---|---|---|---|---|---|---|---|
| EQUIPMENT SERVED | ROOM NO. | CONN. KVA | TRIP AMPS | P | CKT. NO. | PH | CKT. NO. | P | TRIP AMPS | CONN. KVA | ROOM NO. | EQUIPMENT SERVED |
| CHWP-1 (3 HP) | MECH 112 | 3.7 | 20 | 3 | 1 | A | 2 | 3 | 20 | 3.7 | MECH 112 | CHWP-2 (3 HP) |
| | | | | | | B | | | | | | |
| | | | | | | C | | | | | | |
| EF- | MECH 112 | 1.5 | 20 | 3 | 3 | A | 4 | 1 | | 0.4 | MECH 112 | B-1 |
| | | | | | | B | 6 | | | 0.4 | VAULT 113 | EF- |
| | | | | | | C | 8 | | | 0.4 | VAULT 113 | EF- |
| FC UNITS | 124C | 0.5 | 20 | 1 | 5 | A | 10 | | | 0.4 | MECH 112 | WH-1 |
| FC UNITS | 107,109 | 1.0 | | | 7 | B | 12 | | | 0.5 | | AC DX PUMPS |
| FC UNITS | 105,102 | 1.0 | | | 9 | C | 14 | | | 0.5 | | AC DX PUMPS |
| FC UNITS | 118,119 | 1.0 | | | 11 | A | 16 | | | | | SPARE |
| DEHUMIDIFIER | VAULT | 1.5 | 20 | 2 | 13 | B | 18 | | | 0.5 | PUMP RM B14 | DUPLEX SEWAGE PUMP CONTROLLER |
| | | | | | | C | 20 | 3 | | 2.7 | PUMP RM B14 | SEWAGE PUMP#1 (2HP) |
| AC UNIT | EXTERIOR | 3.6 | 20 | 2 | 15 | A | | | | | | |
| | | | | | | B | | | | | | |
| | | | | | | C | 22 | 3 | | 2.7 | PUMP RM B14 | SEWAGE PUMP#2 (2HP) |
| SUMP PUMP | PUMP RM B14 | 0.5 | 20 | 1 | 17 | A | | | | | | |
| DUPLEX SUMP PUMP CONTROLS | PUMP RM B14 | 0.5 | 20 | 1 | 19 | B | | | | | | |
| AC UNIT | EXTERIOR | 5.8 | 30 | 3 | 21 | C | 24 | 3 | 80 | 20 | EXTERIOR | BUILDING AC UNIT |
| | | | | | | A | | | | | | |
| | | | | | | B | | | | | | |
| SUMP PUMP | PUMP RM B14 | 0.5 | 20 | 1 | 23 | C | 26 | 1 | 20 | | | SPARE |
| | | TOTAL CONNECTED KVA | | | | | 53 | | | | | |

| PANEL ME2-1 208/120 VOLTS, 3 PHASES, 4 WIRE, 200 AMPS MAIN CIRCUIT BREAKER<br>SURFACE MOUNTED; ALL CIRCUIT BREAKERS 22KAIC, 225 AMP FRAME 42 POLES<br>LOCATION: ELECTRICAL CLOSET SECOND FLOOR | | | | | | | | | | | | I GROUND BUS |
|---|---|---|---|---|---|---|---|---|---|---|---|---|
| EQUIPMENT SERVED | ROOM NO. | CONN. KVA | TRIP AMPS | P | CKT. NO. | PH | CKT. NO. | P | TRIP AMPS | CONN. KVA | ROOM NO. | EQUIPMENT SERVED |
| AHU-1 (3 HP) | ATTIC | 4 | 20 | 3 | 1 | A | 2 | 3 | 20 | 2.0 | ATTIC FOR UPS, ELEC ROOM | EF- |
| | | | | | | B | | | | | | |
| | | | | | | C | | | | | | |
| EF- | 212 | 2.0 | 20 | 3 | 3 | A | 4 | 1 | | 1.0 | 216,217 | FC UNITS |
| | | | | | | B | 6 | | | 1.0 | 218,219 | FC UNITS |
| | | | | | | C | 8 | | | 1.5 | 220,221,223 | FC UNITS |
| SPARE | | | 20 | 1 | 5 | A | 10 | | | 1.0 | 209,210 | FC UNITS |
| | | | 20 | | 7 | B | 12 | | | 1.0 | 207,208 | FC UNITS |
| | | | 20 | | 9 | C | 14 | | | | | SPARE |
| | | | 20 | | 11 | A | 16 | | | | | |
| SPARE | | | 20 | 2 | 13 | B | 18 | | | | | |
| | | | | | | C | 20 | 3 | 20 | | | SPARE |
| | | | 20 | 2 | 15 | A | | | | | | |
| | | | | | | B | | | | | | |
| SPACE | | | | 1 | 17 | C | 22 | 3 | | | | SPACE |
| | | | | | 19 | A | | | | | | |
| | | | | | 21 | B | | | | | | |
| | | | | | 23 | C | 24 | 1 | | | | SPACE |
| | | | | | 25 | A | 26 | | | | | SPACE |
| | | | | | 27 | B | 28 | | | | | SPACE |
| | | | | | 29 | C | 30 | | | | | SPACE |
| | | TOTAL CONNECTED KVA | | | | | 17.7 | | | | | |

GENERAL NOTES (PANELBOARD SCHEDULES):

1. ALL PANELS SHALL BE EQUIPPED WITH A GROUND BUS. PROVIDE ISOLATED GROUND BUSES FOR PANELS INDICATED.
2. PANELS WITH 200% RATED NEUTRALS SHALL HAVE PROVISION FOR TERMINATING TWO NEUTRAL CONDUCTORS. ALL OTHER PANELS SHALL HAVE FULLY RATED NEUTRALS AS A MINIMUM.
3. MAXIMUM DEPTH OF ALL RECESSED PANELS SHALL BE 6 INCHES.
4. TVSS CIRCUIT BREAKER SIZED PER MANUFACTURER'S REQUIRMENTS.

LEGEND

G = GROUND FAULT CIRCUIT INTERRUPTER, 5ma.
L = LOCKABLE CIRCUIT BREAKER.

CIRCUIT BREAKER SHALL BE LOCKABLE IN THE "ON" POSITION WITH RED MARKERS.

NOTE: ALL DIMENSIONS SHOWN ARE IN MILLIMETERS.

US Army Corps of Engineers
New York District

U.S. ARMY ENGINEER DISTRICT
CORPS OF ENGINEERS
NEW YORK, NEW YORK

PN 8224
MILITARY POLICE STATION
FORT HAMILTON, NY

ELECTRICAL PANEL SCHEDULES

Sheet reference number: E-504

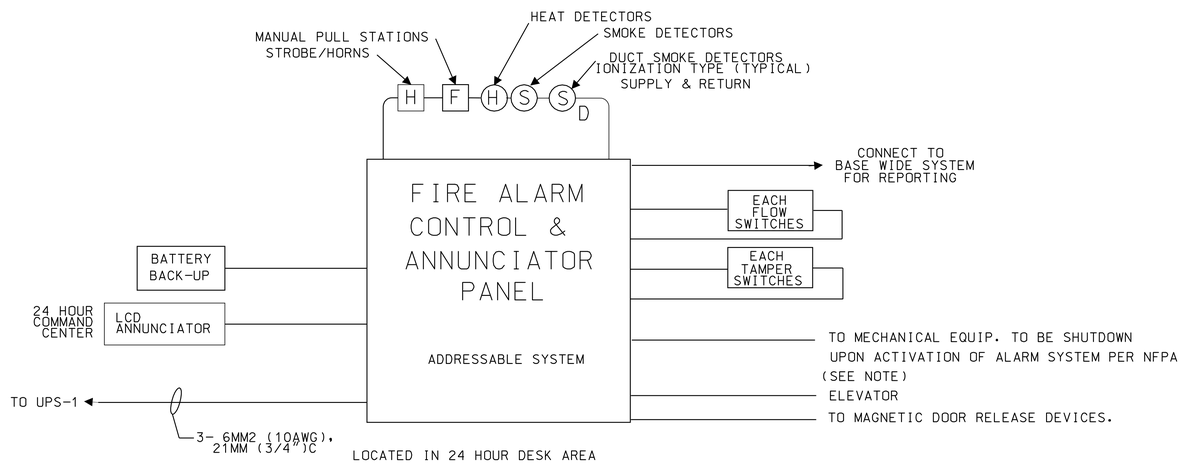


## FIRE ALARM RISER DIAGRAM

N.T.S.

SEE FLOOR PLANS FOR LOCATIONS AND NUMBER OF DEVICES REQUIRED

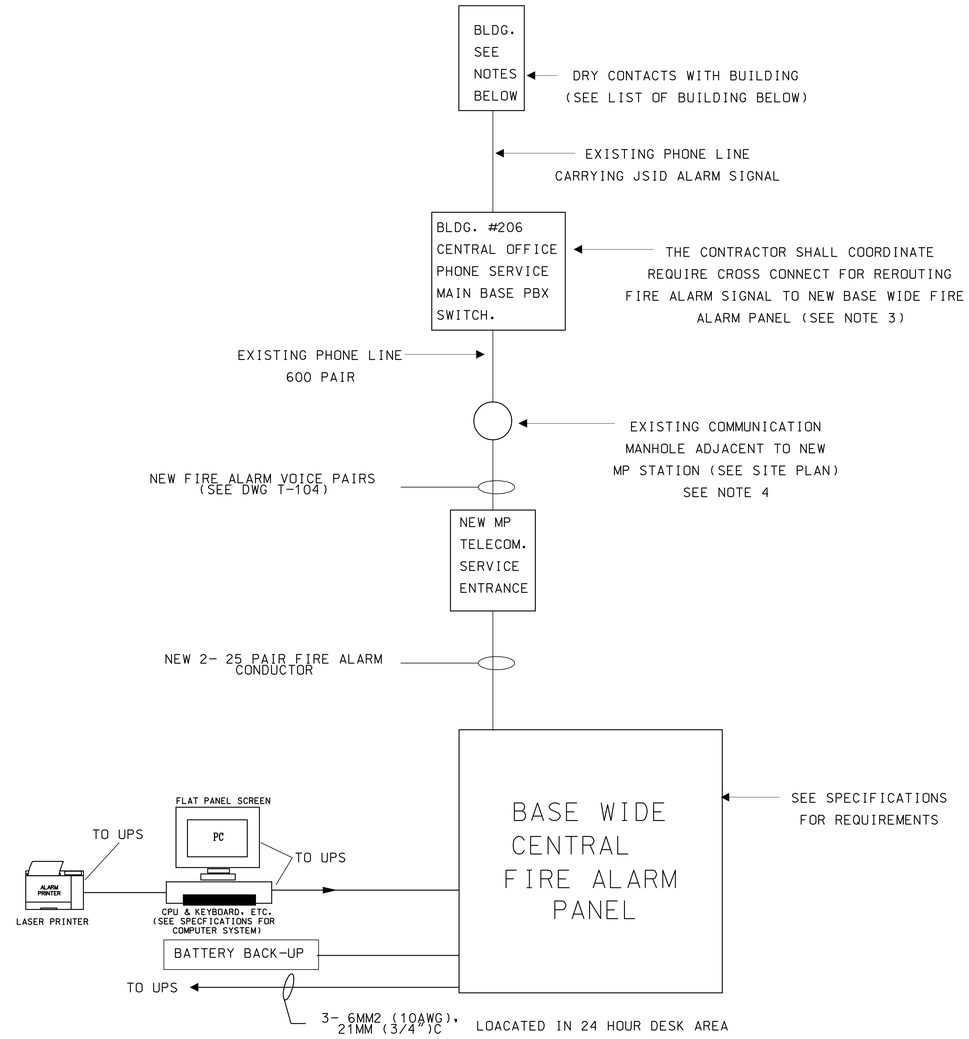


## BASE WIDE FIRE ALARM RISER DIAGRAM

N.T.S.

NOTE:

1. THE CONTRACTOR SHALL PROVIDE AND RE-CONNECT THE FOLLOWING EXISTING BUILDINGS TO THE NEW CENTRAL MONITORING SYSTEM VIA CONTRACTOR RE-ROUTED TELEPHONE LINES BUILDINGS # 107,109,110, 135 ,137, 138, HI RISE, COMMUNICATION FRAME ROOM, 206, 207,208, 209, 210, 218, 230, 310, 407, 408, AND THE NEW NEW MP STATION.

2. THE EXISTING BUILDINGS AND/OR ZONES CONNECTED TO EDWARDS CUSTOM 6500-5 REMOTE FIRE ALARM PANEL AND SIGNAL TYPES WITHIN THE EXISTING MP STATION SHALL BE INVESTIGATED AND DOCUMENTS FOR RECONNECTION AND RELOCATION OF DATA LINES WITHIN THE NEW MP STATION FACILITY. ALL TELEPHONE RELOCATIONS SHALL BE COORDINATED WITH THE LOCAL DOIM. SEE SPECIFICATIONS FOR SYSTEM REQUIREMENTS

3. THE CONTRACTOR SHALL COORDINATE WITH THE LOCAL DOIM FOR CROSS CONNECTING AND RECONNECTING EXISTING BASE WIDE FIRE ALARM PAIRS

4. THE CONTRACTOR SHALL SPLICE EXISTING COPPER VOICE CABLE FOR RECONNECTION OF BASE WIDE FIRE ALARM BUILDING PAIRS.

## NOTES:

1. PROVIDE AN ADDRESSABLE FIRE ALARM SYSTEM . ALARM INITIATING DEVICES (HEAT DETECTORS, SMOKE DETECTORS, DUCT DETECTORS,ETC.) SHALL BE OF THE ADDRESSABLE, INTELLIGENT TYPE.
2. SYSTEM SHALL IDENTIFY THE EXACT LOCATION AND TYPE OF ACTIVATED DEVICE VIA LCD READOUT. ALL DEVICES (PULL STATIONS, SMOKE DETECTORS, HEAT DETECTORS) SHALL BE OF THE ADDRESSABLE TYPE.
3. SEE FLOOR PLANS FOR EXACT NUMBER AND LOCATION OF DEVICES. PROVIDE INITIATING DEVICES IN ACCORDANCE WITH NFPA 72.
4. PROVIDE AN ANNUNCIATOR (LCD TYPE) FOR 1ST FLOOR (24 HOUR DESK AREA) SHOWING LOCATION OF EVERY INITIATING DEVICE AND THE ADDRESS NODE ASSIGNED IN FIRE ALARM PANEL.
5. WIRING SHALL BE "CLASS A", STYLE 6 WITH LOOP ISOLATORS FOR SLC AND STYLE Z FOR IAC CIRCUITS. SUPERVISION (4 WIRE) SHIELDED TWISTED PAIR (#18 AWG MINIMUM) IN $^3/_4$"C (MINIMUM). NO. OF WIRES TO BE PER MANUFACTURER'S SYSTEM REQUIREMENTS. PROVIDE A LOOP CONDUIT SYSTEM FOR ALL SIGNALING LINE CIRCUITS (SLC) AND INDICATING APPLIANCE CIRCUITS (IAC).
6. PROVIDE MINIMUM TWO (2) ANALOG LOOPS FOR ADDRESSABLE INSTALLATION, AND SUBMIT ONE LINE DIAGRAM AS A SHOP DRAWING OF ACTUAL CONFIGURATION.
7. PROVIDE REMOTE INDICATORS (LED TYPE) FOR ALL CONCEALED INITIATING DEVICES (I.E. DUCT DETECTORS)
8. MECHANICAL VENTILATION EQUIPMENT EXCEEDING 2000 CFM SHALL BE SHUT DOWN UPON ACTIVATON OF BUILDING ALARM SYSTEM PER NFPA.

9. ACTIVATION OF ANY ELEVATOR LOBBY, OR ELEVATOR MACHINE ROOM HEAT DETECTOR SHALL AUTOMATICALLY:
a. SIGNAL THE ELEVATOR CONTROLLER VIA SMOKE DETECTOR TO RECALL THE ELEVATOR TO A DESIGNATED NON-FIRE FLOOR AND OPEN ELEVATOR DOORS
b. SIGNAL THE THE SHUNT TRIP CIRCUIT BREAKER TO DISCONNECT POWER TO THE ELEVATOR

10. HEAT DETECTORS IN THE ELEVATOR AND ELEVATOR MACHINE ROOM SHALL BE FIXED TEMPERATURE (57-60 DEGREES C). LOCATE HEAT DETECTOR WITHIN 610mm OF EACH SPRINKLER HEAD IN THE ELEVATOR MACHINE ROOM.

NOTE: ALL DIMENSIONS SHOWN ARE IN MILLIMETERS.

US Army Corps of Engineers
New York District

| Symbol | Description | Date | Appr. |
|---|---|---|---|

U.S. ARMY ENGINEER DISTRICT
CORPS OF ENGINEERS
NEW YORK, NEW YORK

Designed by: | Date: | Size | Rev.:
Dwn by: | Ckd by: | Drawing file no.:
Reviewed by: | Drawing code:
Submitted by: | Plot date: 05-JAN-2009 16:28 | Plot by: adwebb | Scale: 0.500000000000

File name: S:\Mission\military\Fortwainwright\MPBs\Electrical\MPBs E-505.dgn

PN 62224
MILITARY POLICE STATION
FORT WAINWRIGHT, NY

BUILDING AND BASE WIDE FIRE ALARM

Sheet reference number:
E-505

Submitted by: adwebb
Plot Date: 05-JAN-2009 16:28
Plot by: adwebb
Submitted by: adwebb

TYPE: C, V & C1

FEATURES
LAMP TYPE: F32T8/75 CRI
PROFILE: 2 LAMP C &V TYPE, 4 LAMP C1 TYPE
MOUNTING: RECESSED GRID
SHIELDING: 76 mm (3") DEEP, 24 CELL SPECULAR, LOW IRIDESCENT PARABOLIC LOUVER
BALLAST: HIGH POWER ELECTRONIC
2 BALLAST FOR TYPE C1-C LIGHTING SCHEDULE REMARKS FOR OPERATIONS
d- DENOTED DIMMING BALLAST IN 24 HOUR DESK AREA

NOM. DIMENSIONS TYPE C - 610 mm X 1219 mm X 152 mm/ TYPE V - 305 mm X 1219 mm X 152 mm

TYPE C (24" W X 4'L X 6" D) / TYPE V (12" W X 4'L X 6" D)

GENERAL DESCRIPTION
HOUSING: COLD ROLLED STEEL, FLANGE TO COORDINATE WITH CEILING
MOUNTING: RECESSED INTO STANDARD NON METRIC GRID
REFLECTORS: HIGH REFLECTANCE GLOSS WHITE
ELECTRICAL: 120 VOLT BALLAST
EFFICIENCY: 80%

RECESSED PARABOLIC 2'X 4' FLUORESCENT TROFFER

TYPE: I

FEATURES
LAMP TYPE: F32T8/75 CRI
PROFILE: 2 LAMP
SHIELDING: WIRE GUARD AND POLY LAMP SLEAVE
BALLAST: ELECTRONIC, HIGH POWER FACTOR
PROFILE: 2 LAMP
MOUNTING: PENDENT SWIVEL (BALL)

NOM. DIMENSIONS 178 mm X 356 mm X 1219 mm (7" H X 14" W X 4'L)

GENERAL DESCRIPTION
HOUSING: DIE-FORMED CRS HOUSING WITH ROLLED SYMMETRIC REFLECTOR/BALLAST COVER
REFLECTORS: COLD ROLLED STEEL, PAINTED WHITE, 10% UPLIGHT APERTURES
ELECTRICAL: 120 VOLT BALLAST
FINISH: WHITE ENAMEL POLYESTER POWDER COAT
EFFICIENCY: 80%

PENDENT SWIVEL MOUNT 4' INDUSTRIAL FLUORESCENT

CORPS OF ENGINEERS DEPARTMENT OF THE ARMY

TYPE: T

FEATURES
LAMP TYPE: F32T8/75 CRI
PROFILE: 2 LAMP
SHIELDING: ACRYLIC PRISMATIC LENS
BALLAST: ELECTRONIC

OPTIONS
PROFILE: 2 LAMP
SHIELDING: 3.2 mm (0.125")

BALLAST: HIGH POWER FACTOR ELECTRONIC
OTHER: GASKETED VAPOR TIGHT

NOM. DIMENSIONS 610 mm X 1219 mm X 152 mm (24" W X 4' L X 6" D)

GENERAL DESCRIPTION
HOUSING: COLD ROLLED STEEL, FLANGE TO COORDINATE WITH CEILING; EXTRUDED ALUMINUM LENS FRAME, HINGED REMOVAL AND SPRING-LOADED CATCHES
MOUNTING: RECESSED INTO GRID PER ARCHITECTURAL SECTION
REFLECTORS: HIGH REFLECTANCE GLOSS WHITE
ELECTRICAL: 120 VOLT BALLAST
EFFICIENCY: 80%

RECESSED LENSED 2' X 4' FLUORESCENT TROFFER

TYPE: A

AVIATION CABLE

FEATURES: ACHIEVA LUMINAIRE FROM LEDALITE
LAMP TYPE: F32T8 2950 LUMENS 56WATTS
PROFILE: 2 LAMP 70% UPLIGHT/30% DOWNLIGHT

MOUNTING: AIRCRAFT CABLE 12 TO 14 INCH FROM CEILING

LOVER: 34 CELLS PER 4 FOOT
HIGHLY SPECLAR ALUMINUM REFLECTOR
HOUSING - 6063 T5 EXTRUDED ALUMINUM
END CAPS MOLDED, REINFORCED HI- IMPACT POLYMER
FINISH TO MATCH BACKED POWER COAT

BALLAST: HIGH POWER FACTOR (QUICK WIRING) ELECTRONIC, DIMMING AS REQUIERD, EMERGENCY (AS SHOWN ON DRAWING)

NOM. DIMENSIONS 10.4 INCHES X 2.6 INCHES X 48 INCHES

GENERAL DESCRIPTION
REFLECTORS: DIE-FORMED SPECULAR ALUMINUM WITH 95% REFLECTANCE
ELECTRICAL: 120 VOLT BALLAST

PENDANT MOUNTED ALUMINUM DIRECT/INDIRECT FLUORESCENT

TYPE: OP

FEATURES
LAMP TYPE: 400W HPS
PROFILE: 1 LAMP
SHIELDING: 5 mm (3/16") CLEAR TEMPERED GLASS
REFLECTOR: FACETED SPECULAR ALUMINUM
BALLAST: HIGH POWER FACTOR, CORE & COIL, CWA
OTHER: TYPE III DISTRIBUTION

OTHER: TYPE II, III, IV AND V DISTRIBUTIONS.

NOM. DIMENSIONS 642 mm X 470 mm X 143 mm (25 5/16" L X 18 1/2" W X 5 5/8" D)

GENERAL DESCRIPTION
HOUSING: ONE PIECE EXTRUDED ALUMINUM, WELDED JOINTS. LENS HINGED & HELD IN PLACE BY CAPTIVE SCREWS.
MOUNTING: SQ. EXTRUDED MOUNTING ARM AND POLE WITH ANCHOR TYPE BASE, ANCHOR BOLTS & MOUNTING HARDWARE.
ELECTRICAL: 208 VOLT BALLAST.
FINISH: FIXTURE MOUNTING ARM, HOUSING, DOOR FRAMES, POLE & BASE TO BE PAINTED DARK BRONZE FINISH.

POLE MOUNTED HPS CUTOFF LUMINAIRE

TYPE: B

FEATURES
LAMP TYPE: 250 W MH
PROFILE: 1 LAMP
SHIELDING: TEMPERED PRISMATIC BOROSILICATE GLASS
BALLAST: HIGH POWER FACTOR, CORE & COIL, CWA

OPTIONS
LAMP TYPE: MH: 250W
OTHER: KNUCKLE WALL MOUNT OR SLIP FITTER. FIELD INSTALLED PHOTO-CELL CONTROL KIT, THREADED TOP CONDUIT ENTRANCE.

NOM. DIMENSIONS 394 mm X 305 mm X 252 mm (15 1/2" L X 12" D X 9 15/16 " H)

GENERAL DESCRIPTION
HOUSING: DIE CAST ALUMINUM HOUSING, HINGED DOOR
REFLECTORS: FACETED ALUMINUM
ELECTRICAL: 208 VOLT BALLAST
FINISH: PAINTED DARK BRONZE FINISH

HPS WALL PAK

TYPE: TW & SW

FEATURES
LAMP TYPE: F32T8/RS
PROFILE: 2 LAMP
SHIELDING: ACRYLIC PRISMATIC LENS
BALLAST: HIGH POWER FACTOR ELECTRONIC
TYPE TW SHALL BE VAPORTIGHT
NOM. DIMENSIONS 178 mm X 1219 mm X 102 mm (7" D X 4'L X 4" H)

GENERAL DESCRIPTION
HOUSING: DIE-FORMED HOUSING SHALL ALLOW REMOVAL OF LENS WITHOUT REMOVAL OF END-CAPS

REFLECTORS: GLOSS WHITE INTERIOR
ELECTRICAL: 120 VOLT BALLAST
FINISH: WHITE ENAMEL OR POLYESTER POWDER COAT

WALL MOUNTED DIRECT FLUORESCENT

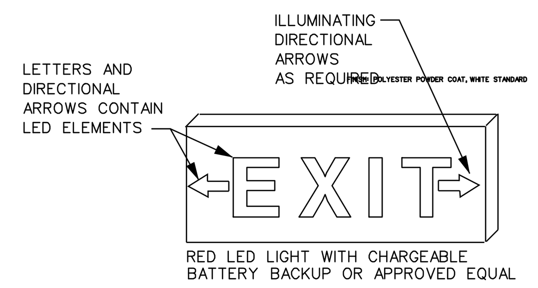


NOTES:
1. DIMENSIONS TO MEET NFPA-101, OF "LIFE SAFETY CODE".
2. THE LUMINANCE OUTPUT FOR NORMAL AND EMERGENCY MODE SHALL BE NOT LESS THAN 70 cd/sq meter. THE CONTRAST LEVEL OF THE LETTERS SHALL BE SYMMETRICALWITH NOT LESS THAN A 0.7 VALUE OR MINUS 3%. THE MANUFACTURER SHALL PROVIDE A CERTIFICATION FOR THEABOVE REQUIREMENTS.

EXIT LIGHT DETAIL

TYPE: J

FEATURES
LAMP TYPE: F32T8/75 CRI
PROFILE: 1 LAMP
BALLAST: ELECTRONIC

PROFILE: 2 LAMP
REFLECTOR: SYMMETRIC OR ASYMMETRIC
BALLAST: HIGH POWER FACTOR ELECTRONIC

SHIELDING: WIRE GUARD AND POLY LAMP SLEAVE

NOM. DIMENSIONS 125 mm X 102 mm X 1219 mm (5" W X 4" H X 4'L)

GENERAL DESCRIPTION
HOUSING: DIE-FORMED COLD ROLLED STEEL, DESIGNED FOR INDIVIDUAL OR CONTINUOUS ROW MOUNTING
REFLECTORS: GLOSS WHITE
ELECTRICAL: 120 VOLT BALLAST
FINISH: WHITE ENAMEL OR POLYESTER POWDER COAT

FLUORESCENT STRIP LIGHT

TYPE: E

FEATURES
LAMP TYPE: 150
PROFILE: 1 LAMP
SHIELDING: CLEAR GLASS GLOBE

OPTIONS
MOUNTING: PENDANT, ARM MOUNT ADAPTER
SHIELDING: HEAT RESISTANT

NOM. DIMENSIONS 111 mm X 251 mm (4 3/8" DIA. X 9 7/8" H)

GENERAL DESCRIPTION
HOUSING: GASKETED WATERTIGHT
ELECTRICAL: 120 VOLT
FINISH: MOLDED IN NON-GRAYING FINISH

SURFACE MOUNTED INCANDESENT VAPOR TIGHT JELLY JAR WITH WIRE GUARD

TYPE: SH

FEATURES
LAMP TYPE: F26DTT/RS
PROFILE: 2 LAMP
BALLAST: ELECTRONIC

LAMP TYPE: F26DTT/RS
BALLAST: HIGH POWER FACTOR ELECTRONIC
GASKETED WITH TEMPERED GLASS LENS
OTHER: WHITE PAINTED FLANGE; WHITE REFLECTOR & TRIM RING; DAMP LOCATION LISTING

NOM. DIMENSIONS 203 mm X 173 mm (8" DIA. X 6 13/16 " D)

GENERAL DESCRIPTION
HOUSING: DIE CAST ALUMINUM WITH UNIVERSAL MOUNTING BRACKETS
REFLECTORS: SEMI-SPECULAR, LOW IRIDESCENT, 1.3 mm (.05") THICK ALUMINUM REFLECTOR, SELF-FLANGED
ELECTRICAL: 120 VOLT BALLAST
EFFICIENCY: 80%

8" DIA. RECESSED COMPACT FLUORESCENT DOWNLIGHT

CORPS OF ENGINEERS DEPARTMENT OF THE ARMY

TYPE: TC

FEATURES
LAMP TYPE: F32T8/75 CRI
PROFILE: 2 LAMP
SHIELDING: ACRYLIC PRISMATIC LENS
BALLAST: HIGH POWER FACTOR ELECTRONIC

SHIELDING: 3.2 mm (0.125")

NOM. DIMENSIONS 610 mm X 1219 mm X 152 mm (24" W X 4' L X 6" D)

GENERAL DESCRIPTION
HOUSING: COLD ROLLED STEEL, FLANGE TO COORDINATE WITH CEILING; EXTRUDED ALUMINUM LENS FRAME, HINGED REMOVAL AND SPRING-LOADED CATCHES
MOUNTING: PENDENT OR SURFACE
REFLECTORS: HIGH REFLECTANCE GLOSS WHITE
ELECTRICAL: 120 VOLT BALLAST
EFFICIENCY: 80%

PENDENT OR SUREACE LENSED 2' X 4' FLUORESCENT

FEATURES
PATTERN: 170 DEGREES
COVERAGE: 28-93 SQ M (300-1000 SF)
TIME DELAY: ADJUSTABLE 15 SECONDS TO 30 MINUTES

OPTIONS
FINISH: DESIGNER COLORS
CONTROL: MANUAL OFF, TWO LEVEL LIGHTING CONTROL

NOM. DIMENSIONS 114 mm X 24 mm X 118 mm (4 1/2" H X 15/16 " D X 4 5/8" W)

GENERAL DESCRIPTION
HOUSING: MEDIUM IMPACT INJECTION MOLDED ABS
MOUNTING: WALL MOUNTED AT NORMAL SWITCH HEIGHT, BETWEEN 915-1525 MM (3-5')
ELECTRICAL: 120 OR 277 VOLT
FINISH: WHITE STANDARD

WALL MOUNTED INFRARED OCCUPANCY SENSOR

FEATURES
PATTERN: 360 DEGREES
COVERAGE: 46-186 SQ M (500-2000 SF)
TIME DELAY: ADJUSTABLE 15 SECONDS TO 30 MINUTES

PATTERN: CORRIDOR/ ROOM DIRECTIONAL AS REQUIRED

NOM. DIMENSIONS 114 mm X 32 mm (4 1/2" DIA. X 1 1/4" D)

GENERAL DESCRIPTION
HOUSING: IMPACT RESISTANT INJECTION MOLDED ABS
MOUNTING: CEILING BETWEEN 2440-3050 mm (8-10') H
ELECTRICAL: 24 VOLT DC (FROM POWER PACK), 120 VOLT AC
FINISH: WHITE

CEILING MOUNTED ULTRASONIC OCCUPANCY SENSOR

TYPE: S

FEATURES
LAMP TYPE: F32T8/75 CRI
PROFILE: 2 LAMP
MOUNTING: RECESSED GRID
SHIELDING: 76 mm (3") DEEP, 24 CELL SEMI-SPECULAR, LOW IRIDESCENT PARABOLIC LOUVER
BALLAST: ELECTRONIC

OPTIONS
PROFILE: 2 LAMP
SHIELDING: SPECULAR LOUVER, 3 X8 CELL CONFIGURATION
BALLAST: HIGH POWER FACTOR ELECTRONC

NOM. DIMENSIONS 610 mm X 1219 mm X 152 mm (24" W X 4'L X 6" D)

GENERAL DESCRIPTION
HOUSING: COLD ROLLED STEEL, FLANGE TO COORDINATE WITH CEILING
MOUNTING: RECESSED INTO STANDARD NON METRIC GRID
REFLECTORS: HIGH REFLECTANCE GLOSS WHITE
ELECTRICAL: 120 VOLT BALLAST
EFFICIENCY: 80%

SURFACE MOUNTED PARABOLIC 2'X 4' FLUORESCENT

TYPE: LW

FEATURES
LAMP TYPE: F26DTT/RS
PROFILE: 2 LAMP
BALLAST: ELECTRONIC

LAMP TYPE: F26DTT/RS
BALLAST: HIGH POWER FACTOR ELECTRONIC

OTHER: WHITE PAINTED FLANGE; WHITE REFLECTOR & TRIM LISTING

NOM. DIMENSIONS 203 mm X 173 mm (8" DIA. X 6 13/16 " D)

GENERAL DESCRIPTION
HOUSING: DIE CAST ALUMINUM WITH UNIVERSAL MOUNTING BRACKETS
REFLECTORS: SEMI-SPECULAR, LOW IRIDESCENT, 1.3 mm (.05") THICK
ELECTRICAL: 120 VOLT BALLAST
EFFICIENCY: 80%

8" DIA. RECESSED COMPACT FLUORESCENT WALL WASHER

TYPE: P

FEATURES
LAMP TYPE: 175W MH
PROFILE: 1 LAMP
SHIELDING: CLEAR FLAT TEMPERED GLASS
REFLECTORS: HYDROFORMED, ANODIZED ALUMINUM
WEATHER PROOF ENCLOSURE
BALLAST: HIGH POWER FACTOR MAGNETIC, CORE & COIL, CWA

NOM. DIMENSIONS 425 mm X 425 mm X 203 mm (16 3/4 " SQ. X 8 " H)

GENERAL DESCRIPTION
HOUSING: HEAVY GAUGE ALUMINUM, CONTINUOUSLY SEAM WELDED, GROUND SMOOTH. CONTINUOUS GASKETING AROUND EXTRUDED ALUMINUM HINGED DOOR FRAME
ELECTRICAL: 208VOLT BALLAST
FINISH: POLYESTER POWDER COAT

RECESSED MOUNTED METAL HALIDE LUMINAIRE

TYPE: 200

FEATURES
LAMP TYPE: F32T8/RS,
PROFILE: 2 LAMP
MOUNTING: CONCEALED IN FIXTURE
OTHER: CHARGING INDICATOR LIGHT; TEST SWITCH
BATTERY: 90 MINUTE OPERATION
NORNALLY OFF UNLESS DE-ENEGIZED

NOM. DIMENSIONS 38 mm X 64 mm X 241 mm (1 1/2" W x 2 1/2" H x 9 1/2" )

GENERAL DESCRIPTION
HOUSING: 22 GAUGE RED PAINTED STEEL ENCLOSURE
ELECTRICAL: 120 VOLT
BATTERY: HIGH TEMPERATURE NICKEL CADMIUM
OTHER: NOT SUITABLE FOR INSTALLATION IN HEATED AIR OUTLET FIXTURES, WET, DAMP OR HAZARDOUS LOCATION FIXTURES

EMERGENCY BATTERY PACK UNIT

MOTION SENSOR SCHEDULE

| TYPE | DESCRIPTION | COVERAGE | ASSOCIATED LOAD TO RELAY MODULE | TIME DELAY SETTING |
|---|---|---|---|---|
| (D) / (D)→ | CEILING MOUNTED ULTRASONIC/IR SENSOR | 185sq m OMNI DIRECTIONAL DIRECTIONAL | LIGHTING LOADS | 30 MINUTES |
| ←(D)→ | CEILING MOUNTED ULTRASONIC/IR SENSOR (TWO-WAY) | 15,244mm EACH DIRECTION | LIGHTING LOADS | 30 MINUTES |
| MS | WALL MOUNTED PASSIVE INFRARED MOTION SENSOR WITH INTEGRAL OFF AUTO SWITCH | 93 $m^2$ AT 170° | LIGHTING LOADS | 30 MINUTES |

THE CONTRACTOR SHALL CONTACT THE SENSOR SUPPLIER TO VERIFY PLACEMENT, AREA OF COVERAGE AND TYPE APPICABLE. AS PART OF THE LIGHTING FIXTURE SUBMITAL THE CONTRACTOR SHALL PROVIDE THE INFORMATION FOR APPROVAL.

LIGHTING FIXTURE SCHEDULE

| CONTRACT DRAWING FIXTURE MARK | LOCATION/DESCRIPTION | F-FLUOR. I-INCAN. HPS-HIGH PRESSURE SODIUM LED-LIGHT EMIT DIODE MH- METAL HALIDE CF- COMPACT FLUOR. | NO. OF LAMPS | WATTAGE | VOLTAGE | MOUNTING HEIGHT C-CEILING (U.O.N.) | MOUNT-STYLE R-RECESS P-PENDANT S-SURFACE W-WALL | REMARKS |
|---|---|---|---|---|---|---|---|---|
| A d | ADMIN AREAS, OFFICE, | F | 2 | 32 | 120 | 12TO14 INCH BELOW CEILNG | P | d- DENOTED DIMMER BALLAST WITH MOTION CONTROL |
| B | BUILDING EXTERIOR (PERIMETER) | MH | 1 | 250 | 208 | 30m/12FT AFG | W | |
| C d | CORRIDORS, LOBBY & 24 HOUR DESK AREA | F | 2 | 32 | 120 | 28.5m/9FTAFG | R | d- DENOTED DIMMER BALLAST |
| C1 | CORRIDORS | F | 4 * | 32 | 120 | 28.5m/9FTAFG | R | SEE NOTE 1 BELOW |
| D | DETENTION | F | 2 | 32 | 120 | 28.5m/9FTAFG | W | VANDEL AND PRISON PROOF HOUSING |
| E | ELEVATOR PIT | CF | 1 | 18 | | 22.4m/7.5FTAFF | W | |
| I | ELECTRICAL AND MECHANICAL ROOMS | F | 2 | 32 | 120 | C | P OR S | |
| J | JANITORS CLOSET | F | 2 | 32 | 120 | C | S | |
| LW | LOBBY WALL WASHERS | CF | DTT | 32 | 120 | C | R | |
| P | PORTICO | MH | 1 | 175 | 208 | C | S OR R | OUTDOOR DAMP LOCATION |
| S | STAIRWELL | F | 3 | 32 | 120 | C | S | SEE NOTE 2 BELOW |
| SW | STAIRWELL | F | 3 | 32 | 120 | C | W | SEE NOTE 2 BELOW |
| SH | SHOWER AREA | CF | DTT | 32 | 120 | C | R | |
| T | TOILETS, RESTROOMS | F | 1 | 32 | 120 | C | S | |
| TC | TELECOMM CLOSETS | F | 2 | 32 | 120 | C | P OR S | |
| TW | TOILETS, RESTROOMS | F | 2 | 32 | 120 | | W | |
| V | TOILET VESTIBLE | F | 2 | 32 | 120 | C | R | |
| ⊗ | EXIT SIGN | LED | 1 | 6 | 120 | | P,S | |
| OP | PARKING LOT | HPS | 1 | 400 | 208 | 30 FT | POLE | |
| G | ENTRANCE | MH | 1 | 175 | 208 | 12 TO 15 FT 48 TO 60 M | W | WHITE POLYMER GLOBE 16 INCH DIAMETER VANDAL PROOF HOUSING |
| ARD | ARMS ROOM ETERIOR DOOR | F | 1 | 32 | 120 | ABOVE DOOR | W | THIN PROFILE - UNSWITCHED- TYPE SUBJECT TO APPROVAL |
| AR | ARMS ROOM | F | 2 | 32 | 120 | | R | HAZADOUS RATING CLASS 1& 2, DIVISION 2 &3, GROUP D |

NOTES:
1. PROVIDE TWO BALLASTS ONE FOR NIGHT LIGHT, THE OTHER FOR EMERGENCY LIGHTING POWER PACK 200 EMERGENCY LIGHT SHALL BE SWITCHED ON UPON POWER FAILURE
2. PROVIDE TWO BALLASTS ONE FOR TWO LAMP MOTION SENSOR OPERATIONS, THE OTHER FOR EMERGENCY LIGHTING WITH POWER PACK 200. MOTION SENSOR BUILT IN AS PART OF THE FIXTURE. EMERGENCY LIGHT SHALL BE SWITCHED ON UPON POWER FAILURE

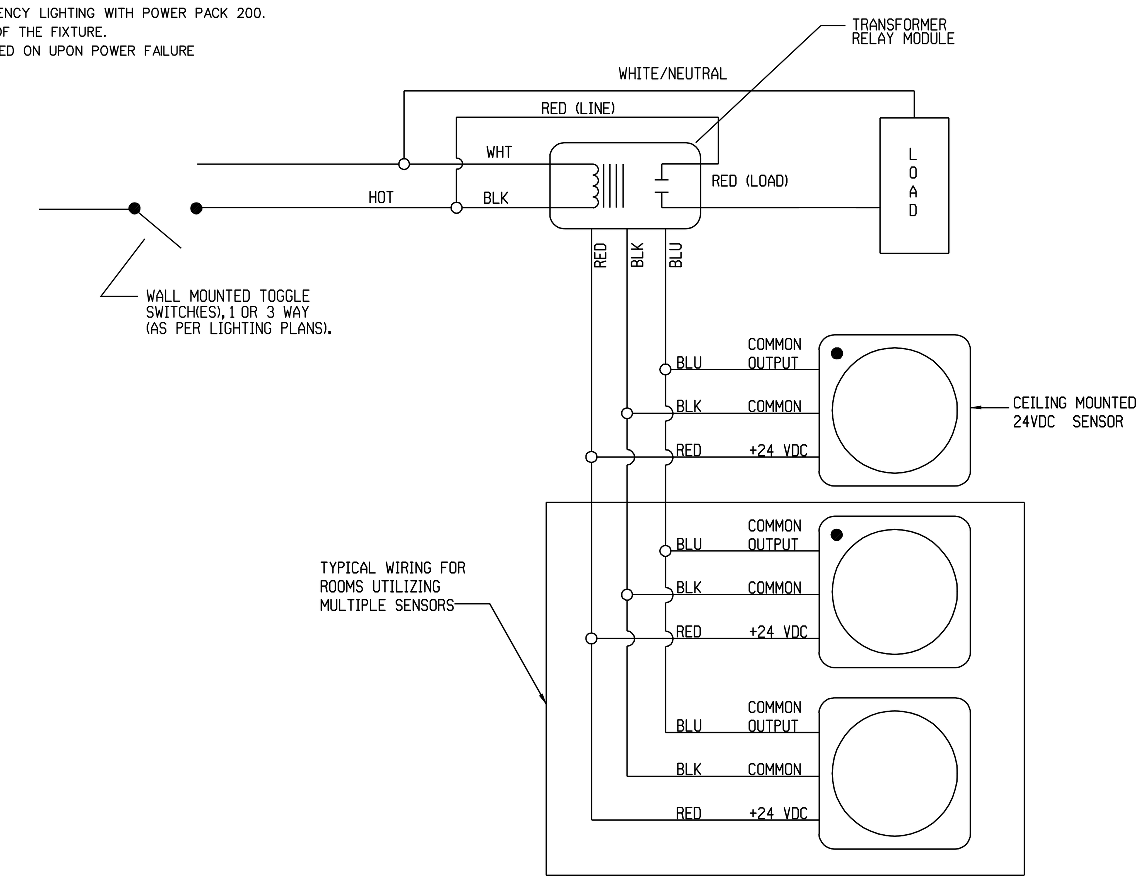


DETAIL 2
CEILING MOUNTED OCCUPANCY SENSOR
NOT TO SCALE
1. VERIFY WITH MANUFACTURER THE MAXIMUM PERMITTED NO. OF SENSORS PER RELAY MODULE.
2. LOCATE ALL RELAY MODULES IN NEMA I ENCLOSURES, AND WIRING SHALL BE ROUTED IN CONDUIT.

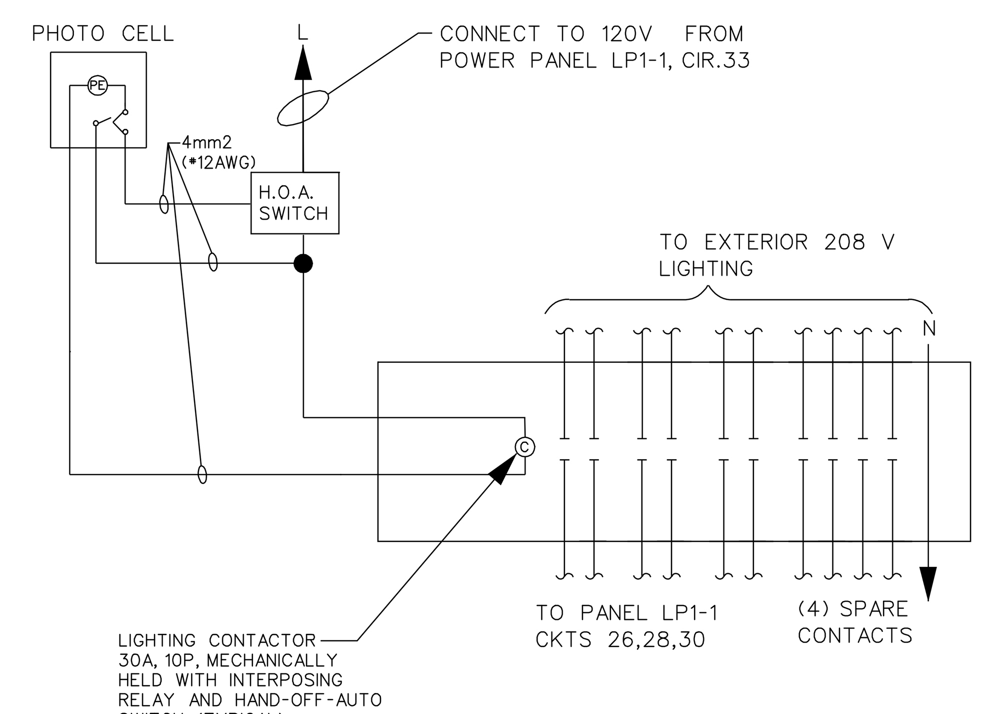


EXTERIOR LIGHTING CONTROL WIRING DIAGRAM
N.T.S.

NOTES
1. SEE PLANS AND PANEL SCHEDULES FOR CIRCUITING.
2. CONTACTOR C1: SPDT, NORMALLY OPEN, 30 AMPS, 120V, AC

NOTE: ALL DIMENSIONS SHOWN ARE IN MILLIMETERS.

US Army Corps of Engineers
New York District

U.S. ARMY ENGINEER DISTRICT
CORPS OF ENGINEERS
NEW YORK, NEW YORK

Designed by: | Dwn by: | Ckd by: | Reviewed by: | Submitted by: | Date: | Drawing file no.: | Drawing code: | Size: | Rev.:
Plot date: 05-JAN-2005 16:28
Plot by: e3endfwb
Scale: 0.164042:1.000000
File name: S:\fileroom\military\Fort Hamilton\MPSta\Electrical\MPSta E-601.dgn

PN 52224
MILITARY POLICE STATION
FORT HAMILTON, NY

LIGHTING FIXTURE DETAILS AND SCHEDULE

Sheet reference number:
E-601

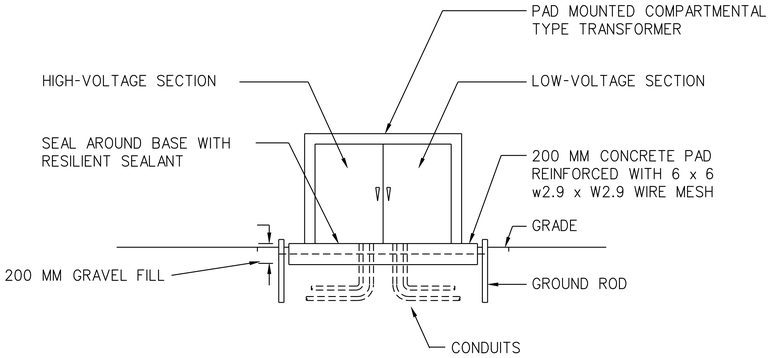


ELEVATION

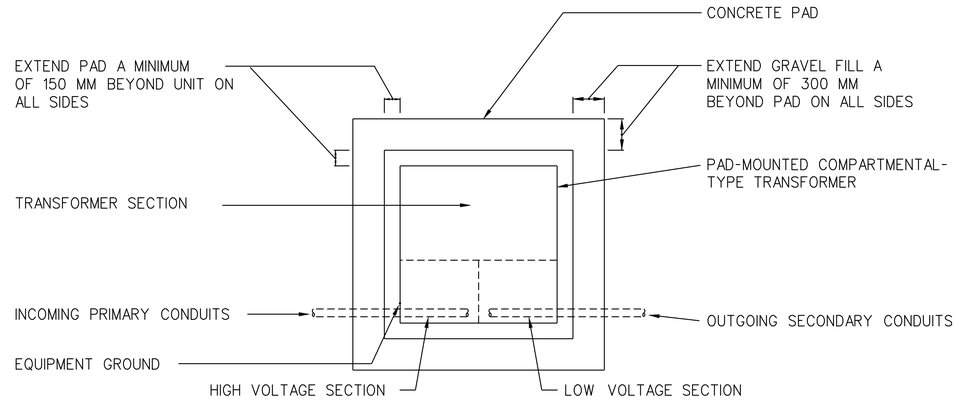


PLAN

# PAD MOUNTED TRANSFORMERS

## DETAIL N.T.S.

NOTES: COORDINATE EXACT TRANSFORMER PAD REQUIREMENTS WITH (LOCAL UTILITY)

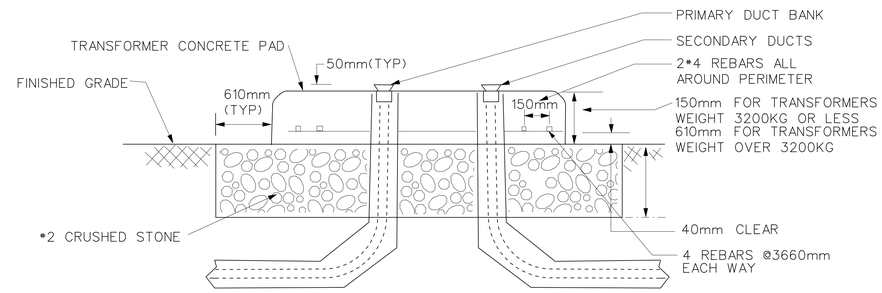


NOTE: OPENING IN TRANSFORMER PAD FOR DUCTS SHALL BE COORDINATED WITH TRANSFORMER MANUFACTURER VENDOR DRAWINGS

## TYPICAL PADMOUNT TRANSFORMER PAD DETAIL

NTS

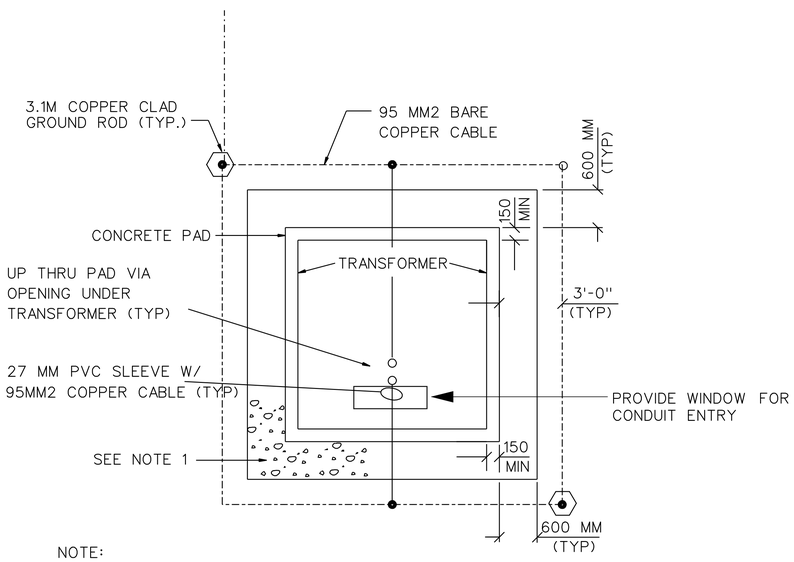


NOTE:

1. 200 MM DEEP GRAVEL FILL AROUND CONCRETE PAD

## TYPICAL PADMOUNTED TRANSFORMER GROUNDING

N.T.S.

NOTE:

DETAIL TYPICAL FOR UNDERGROUND CABLE TO OVERHEAD POLE TRANSITION

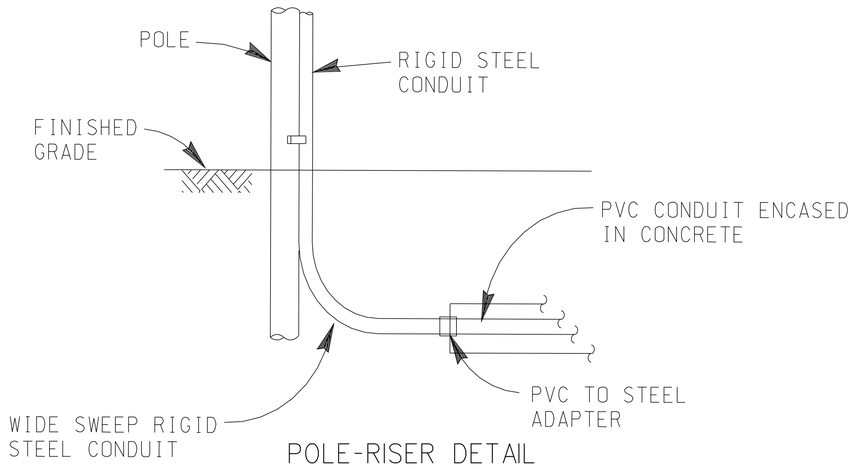


POLE-RISER DETAIL

## TRANSITION FROM UNDERGROUND PVC TO POLE USING STEEL CONDUITS

NTS

NOTE: ALL DIMENSIONS SHOWN ARE IN MILLIMETERS.

US Army Corps of Engineers
New York District

| Symbol | Description | Date | App. |
|---|---|---|---|

U.S. ARMY ENGINEER DISTRICT
CORPS OF ENGINEERS
NEW YORK, NEW YORK

Designed by: | Date: | Size | Rev:
Dwn by: | Ckd by: | Drawing file no.:
Reviewed by: | Drawing code:
Submitted by: | Plot date: 05-JAN-2009 16:28 | Plot by: e3endwb | Scale: 0.000000000
File name: S:\Mission\military\Fort Hamilton\MPDs\Electrical\MPDs_E-602.dgn

PN 62224
MILITARY POLICE STATION
FORT HAMILTON, NY

TRANSFORMER DETAILS

Sheet reference number:
E-602

Submitted by: e3endwb
Plot Date: 05-JAN-2009 16:28
Plot Scale: 0.000000000
Plot By: e3endwb
S:\Mission\military\Fort Hamilton\MPDs\Electrical\MPDs_E-602.dgn

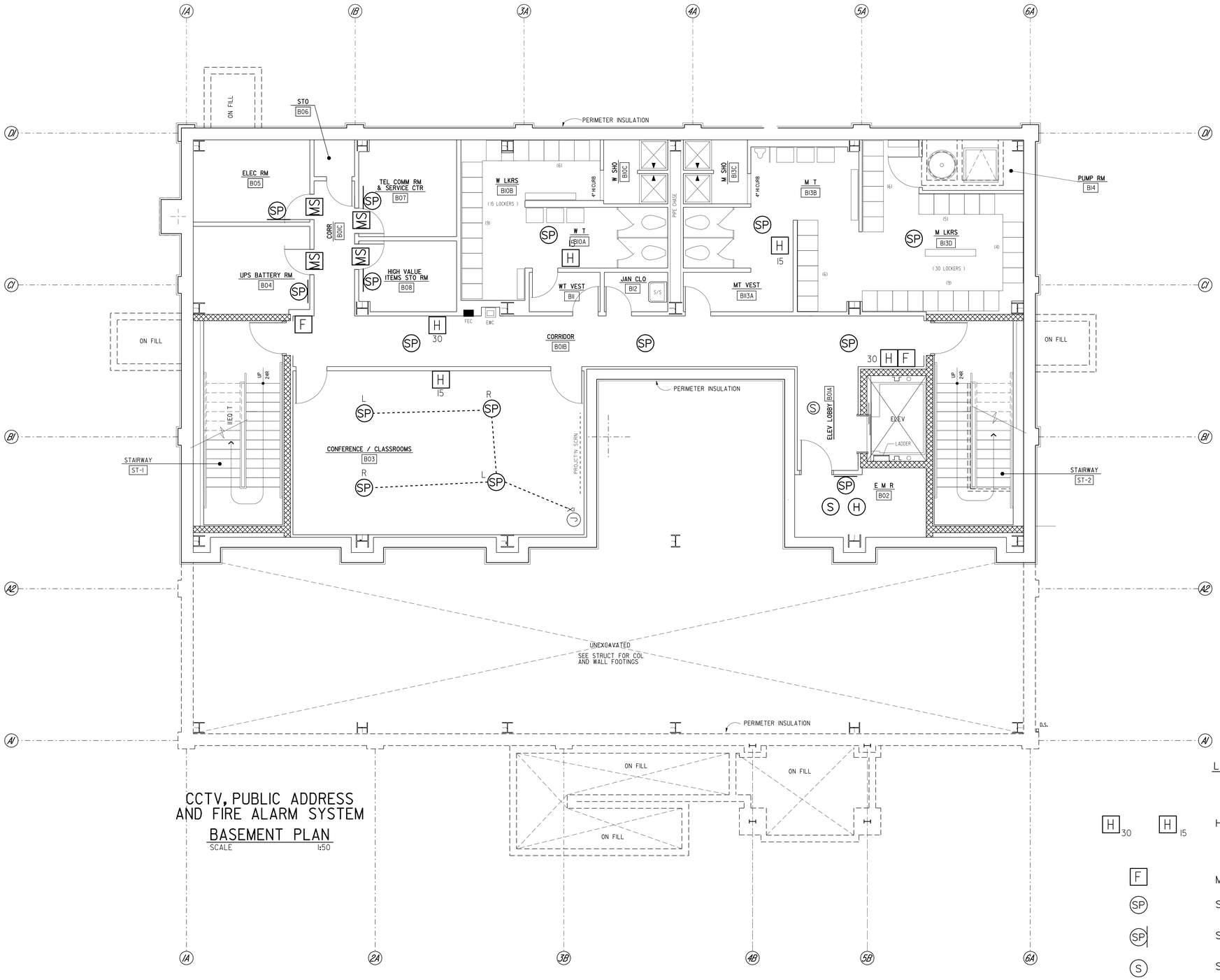


# CCTV, PUBLIC ADDRESS AND FIRE ALARM SYSTEM

## BASEMENT PLAN

SCALE 1:50

LEGEND:

| | |
|---|---|
| H 30 / H 15 | HORN/STROBE (F) 15 - DENOTE CANDLE POWER OF STROBE; 30 - DENOTE CANDLE POWER OF STROBE |
| F | MANUAL ALARM PULL STATION |
| SP | SPEAKER CEILING MOUNT |
| SP | SPEAKER WALL MOUNT |
| S | SMOKER DETECTOR |
| SP L R | L AND R DENOTED LEFT AND RIGHT CHANNELS RESPECTIVELY (CLASSROOM ONLY) |

GRAPHIC SCALE

SCALE 1:50

NOTE: ALL DIMENSIONS SHOWN ARE IN MILLIMETERS.

TRUE NORTH

PROJECT NORTH

US Army Corps of Engineers
New York District

| Symbol | Description | Date | Appr. |
|---|---|---|---|

U.S. ARMY ENGINEER DISTRICT
CORPS OF ENGINEERS
NEW YORK, NEW YORK

Designed by:
Dwn by: Ckd by:
Reviewed by:
Submitted by:
Date:
Size: Rev:
Drawing file no.:
Drawing code:
Plot date: 05-JAN-2005 16:28
Plot by: e3endfeb
File name: E:\Telecom\military\Fort Hamilton\Office\Drawings\Office E-700.dgn

PN. 52224
MILITARY POLICE STATION
FORT HAMILTON, NY

CCTV, PUBLIC ADDRESS AND FIRE ALARM SYSTEM BASEMENT PLAN

Sheet reference number:
E–700

Submitted by: e3endfeb
perlfile=d:\temp\pdf\fort hamilton\pdf\e3endfeb\ft E-700.dgn
Plot Date: 05-JAN-2005 16:28

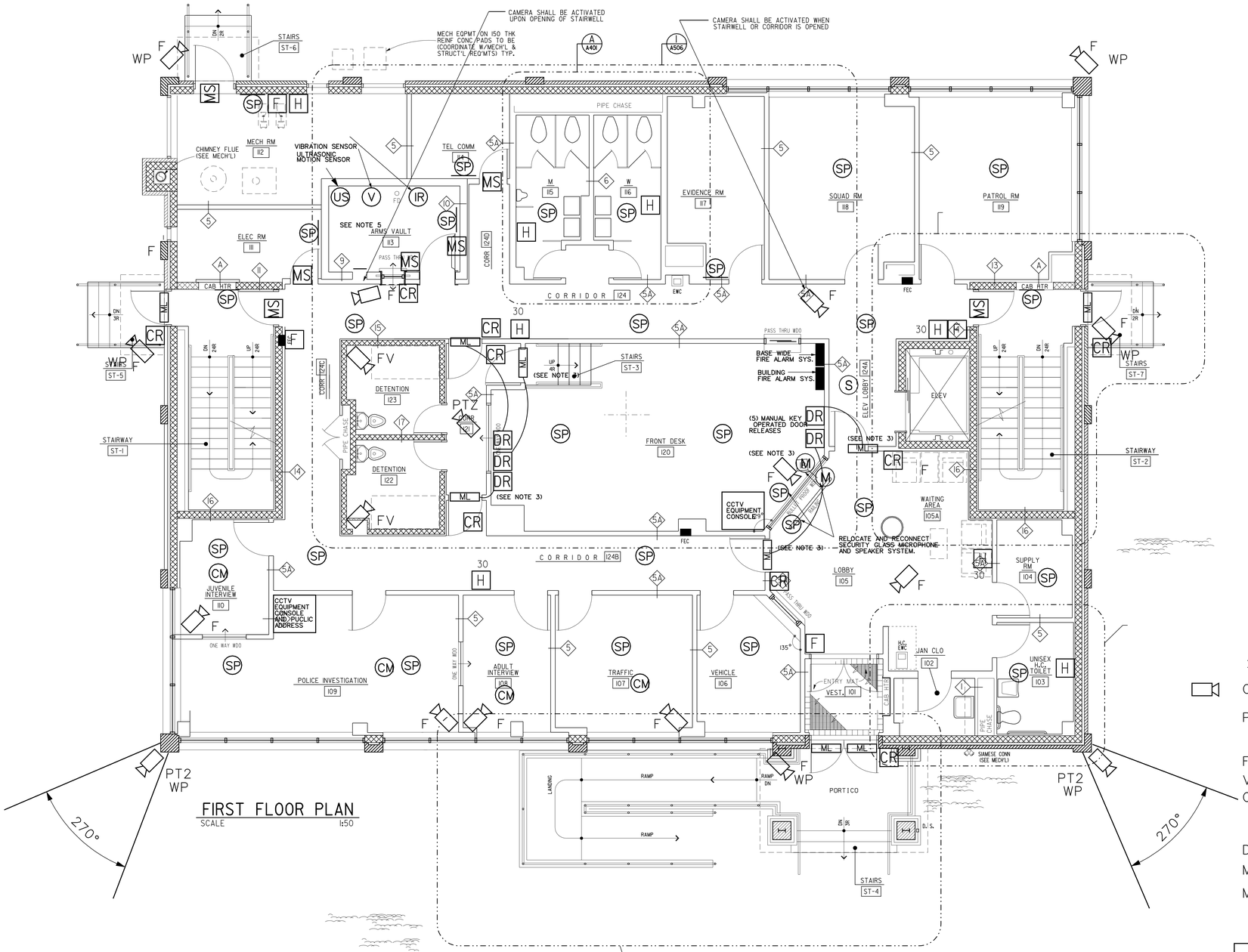


## FIRST FLOOR PLAN

SCALE 1:50

## FIRST FLOOR PLAN CCTV, PUBLIC ADDRESS AND FIRE ALARM SYSTEM

## NOTES:

1. ALL CAMERAS SHALL BE MOUNTED IN A SMOKED DOME. INTERIOR CAMERAS SHALL BE CEILING MOUNTED TYPE, THE DETENTION CELL CAMERAS ROOMS 123 & 122 SHALL BE PROVIDED WITH A VANDLE PROOF ENCLOSURE. EXTERIOR CAMERAS SHALL BE MOUNTED FROM A CANTERLEVER ARM, WITH A WEATHER PROOF SMOKED ENCLOSURE.
2. ROOMS JUVENILE INTERVIEW, POLICE INVESTIGATION, ADULT INTERVIEW, TRAFFIC SHALL BE PROVIDED WITH A CCTV SYSTEM VIEWABLE FROM THE POLICE INVESTIGATION ROOM. (SEE CCTV ONE LINE DIAGRAM)
3. DOOR LOCKS SHOWN SHALL BE PROVIDED WITH A MANUAL RELEASE ACTIVATED FROM THE 24 HOUR DESK WINDOW.
4. THE CELING MOUNYED MICROPHONES SHALL BE SHURE MX/202/BPC (CARDIOID) SOUND REINFORCEMENT PICKUP ANGLE (-3 dB) 170 DEGREES (WHITE).
5. SECURITY DEVICE IN THE ARMS ROOM SHALL BE INSTALLED AS SHOWN. THE SYSTEM SHALL BE CONTROLLED BY CARD READER KEY PAD AND SIGNAL 24 HOUR DESK AREA AS ARMS OR DISARMS.

## LEGEND:

| | |
|---|---|
| CCTV | -CAMERA-CEILING MOUNTED SMOKED DOME |
| PTZ | -PAN/TILT/ZOOM WITH WEATHERPROOF HEATER BLOWER FOR EXTEIOR INSTALLATIONS |
| F | -FIXED |
| V | -VANDLE PROOF ENCLOSURE |
| CR | -PROXIMITY CARD READER WITH KEY PAD 3FT-6INCHES AFF- FLUSH MOUNTED |
| DR | -MANUAL DOOR RELEASE-INTGEGRAL TO DOOR |
| MS | -MAGNETIC SWITCH-INTEGRAL TO DOOR |
| ML | -MAGNETIC LATCH WITH BALANCE MAGNETIC SWITCH-INTEGRAL TO DOOR PROVIDE PANIC DOOR HARDWARE IN ACCORDANCE WITH ARCHITECTURAL DOOR SCHEDULE FOR FIRE EXIT DOOR RELEASE |
| CCTV EQUIPMENT CONSOLE | -MONITOR, RECORDER, VIDEO SWITCHING ETC. EQUIPMENT (SEE CCTV ONLINE DIAGRAM AND SPECIFICATION). |
| SP | -CEILING MOUNTED SPEAKER |
| SP | -WALL MOUNTER SPEAKER - TOP 6 INCH FROM CEILING |
| CM | -CEILING MOUNTED MICROPHONE (SEE NOTE 4 ABOVE) |

NOTES: UNLESS OTHERWISE SHOWN, DIMENSIONS SHOWN ARE IN MILLIMETERS.

US Army Corps of Engineers
New York District

| Symbol | Description | Date | Appr. |
|---|---|---|---|

| Rev. | Date | Designed by: | Date: | Size: |
|---|---|---|---|---|
| | | Dwn by: | Drawing file no.: | |
| | | Ckd by: | Drawing code: | |
| | | Reviewed by: | Plot date: 05-JAN-2005 16:28 | |
| | | Submitted by: | Plot by: eJacobs | |
| | | | Scale: 0.100000000000 | |

U.S. ARMY ENGINEER DISTRICT
CORPS OF ENGINEERS
NEW YORK, NEW YORK

File name: S:\Mission\Military\Fort Hamilton\Office\Drawings\FHa_E-701.dgn

PN 52224
MILITARY POLICE STATION
FORT HAMILTON, NY

# CCTV, PUBLIC ADDRESS AND FIRE ALARM SYSTEM FIRST FLOOR PLAN

Sheet reference number:
E-701

Submitted by: e3mail'eb
gentherapdemilitary-pfort hamilton(ard)(f-hamilton@usfc(ecc)(usfc@usfc) E-701.dgn
Plot Dates 05-JAN-2005 16:28

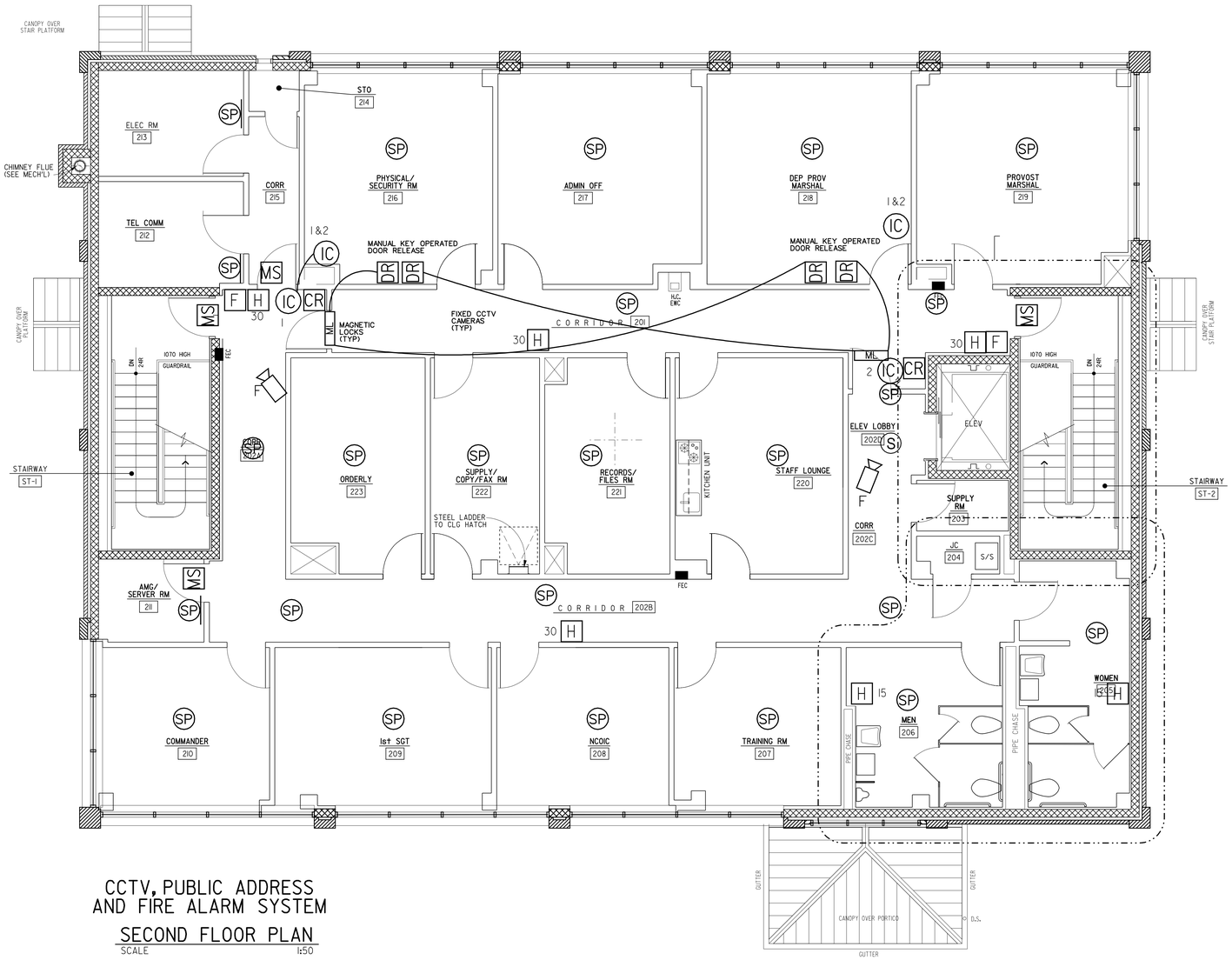


# CCTV, PUBLIC ADDRESS AND FIRE ALARM SYSTEM

## SECOND FLOOR PLAN

SCALE 1:50

NOTES:

1. AN INTERCOM SHALL BE PROVIDED AT EACH DOOR AND OFFICE AS SHOWN. EACH INTERCOM WITHIN THE OFFICE SHALL BE CAPABLE OF COMMUNICATING AND IDENTIFYING DOOR AT WHICH PERSONNEL IS REQUESTING ACCESS AND RELEASE MAG LOCKS TO OPEN. DOOR. SYSTEM SHALL BE SUBMITTED FOR FOR APPROVAL.

NOTE: ALL DIMENSIONS SHOWN ARE IN MILLIMETERS.

US Army Corps of Engineers
New York District

| Symbol | Description | Date | Appr. |
|---|---|---|---|

U.S. ARMY ENGINEER DISTRICT
CORPS OF ENGINEERS
NEW YORK, NEW YORK

Designed by: | Date: | Size: | Rev:
Dwn by: | Ckd by: | Drawing file no.:
Reviewed by: | Drawing code:
Submitted by: | Plot date: 05-JAN-2009 16:28 | Plot by: e_dondrab | Scale: 6.000000000000
File name: S:\Mission\military\Fort Hamilton\Military\Electrical\Mil Pol Sta E-702.dgn

PN 62224
MILITARY POLICE STATION
FORT HAMILTON, NY

CCTV, PUBLIC ADDRESS AND FIRE ALARM SYSTEM
SECOND FLOOR PLAN

Sheet reference number:
E-702

Submitted by: e3endfwb
S:\Mission\military\Fort Hamilton\Military\Electrical\Mil Pol Sta E-702.dgn
Plot Date: 05-JAN-2009 16:28

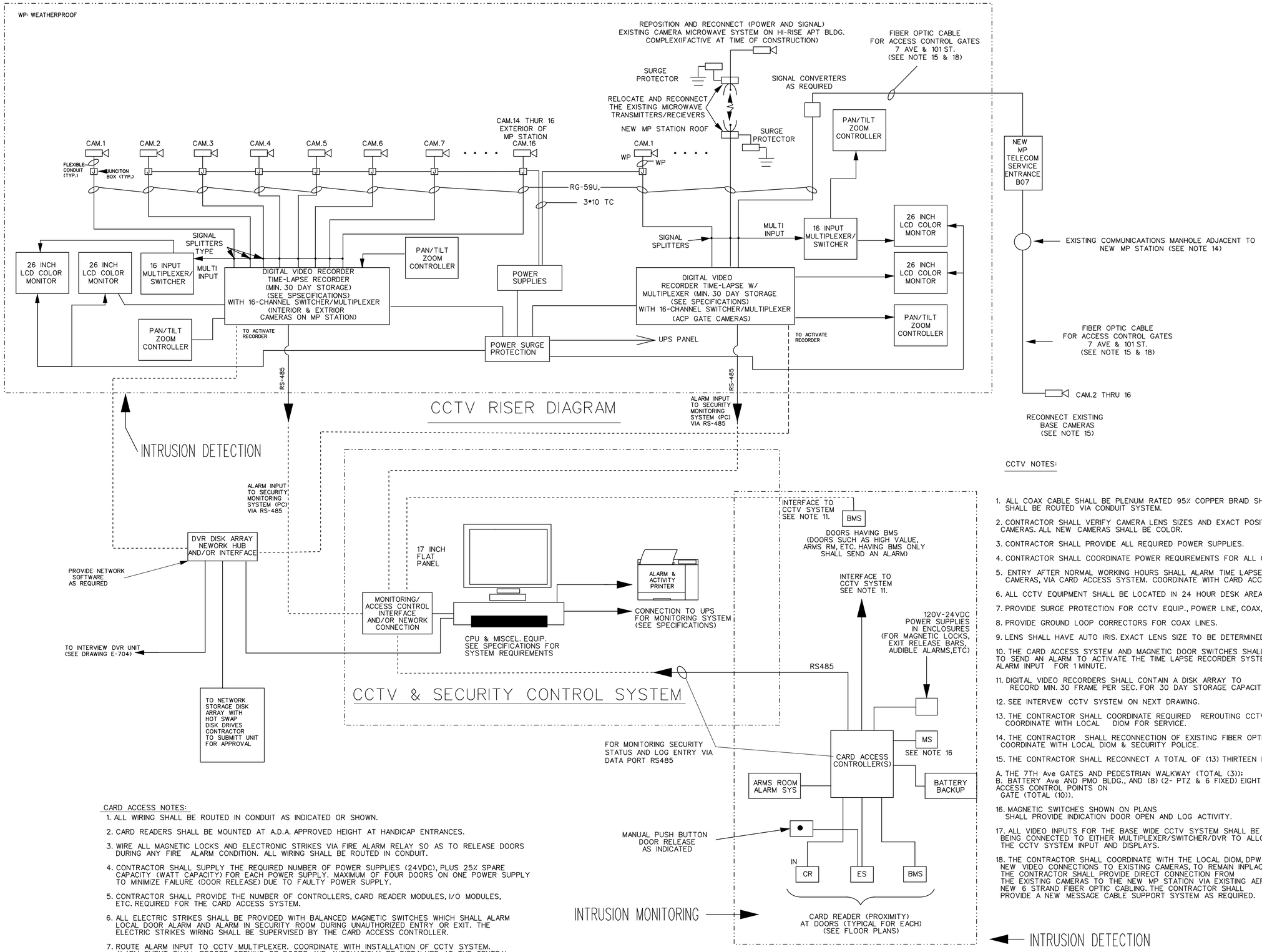


CCTV RISER DIAGRAM




CCTV & SECURITY CONTROL SYSTEM

CARD ACCESS SYSTEM RISER DIAGRAM

CCTV NOTES:

1. ALL COAX CABLE SHALL BE PLENUM RATED 95% COPPER BRAID SHEILD. ALL WIRING SHALL BE ROUTED VIA CONDUIT SYSTEM.
2. CONTRACTOR SHALL VERIFY CAMERA LENS SIZES AND EXACT POSITIONING OF CAMERAS. ALL NEW CAMERAS SHALL BE COLOR.
3. CONTRACTOR SHALL PROVIDE ALL REQUIRED POWER SUPPLIES.
4. CONTRACTOR SHALL COORDINATE POWER REQUIREMENTS FOR ALL CCTV EQUIPMENT.
5. ENTRY AFTER NORMAL WORKING HOURS SHALL ALARM TIME LAPSE RECORDERS FOR CAMERAS, VIA CARD ACCESS SYSTEM. COORDINATE WITH CARD ACCESS SYSTEM INSTALLATION.
6. ALL CCTV EQUIPMENT SHALL BE LOCATED IN 24 HOUR DESK AREA.
7. PROVIDE SURGE PROTECTION FOR CCTV EQUIP., POWER LINE, COAX, ETC. AS PER SPEC.
8. PROVIDE GROUND LOOP CORRECTORS FOR COAX LINES.
9. LENS SHALL HAVE AUTO IRIS. EXACT LENS SIZE TO BE DETERMINED BY THE CONTRACTOR.
10. THE CARD ACCESS SYSTEM AND MAGNETIC DOOR SWITCHES SHALL BE INTERFACED TO THE CCTV SYSTEM TO SEND AN ALARM TO ACTIVATE THE TIME LAPSE RECORDER SYSTEM THROUGH THE DIGITAL RECORDER ALARM INPUT FOR 1 MINUTE.
11. DIGITAL VIDEO RECORDERS SHALL CONTAIN A DISK ARRAY TO RECORD MIN. 30 FRAME PER SEC. FOR 30 DAY STORAGE CAPACITY.
12. SEE INTERVEW CCTV SYSTEM ON NEXT DRAWING.
13. THE CONTRACTOR SHALL COORDINATE REQUIRED REROUTING CCTV SIGNAL TO NEW MP STATION. COORDINATE WITH LOCAL DIOM FOR SERVICE.
14. THE CONTRACTOR SHALL RECONNECTION OF EXISTING FIBER OPTIC CABLING FOR EXIXSTING CCTV CAMERAS. COORDINATE WITH LOCAL DIOM & SECURITY POLICE.
15. THE CONTRACTOR SHALL RECONNECT A TOTAL OF (13) THIRTEEN EXISTING CCTV CAMERA SIGNALS FROM :

A. THE 7TH Ave GATES AND PEDESTRIAN WALKWAY (TOTAL (3));
B. BATTERY Ave AND PMO BLDG., AND (8) (2- PTZ & 6 FIXED) EIGHT FROM THE 101ST ACCESS CONTROL POINTS ON GATE (TOTAL (10)).

16. MAGNETIC SWITCHES SHOWN ON PLANS SHALL PROVIDE INDICATION DOOR OPEN AND LOG ACTIVITY.
17. ALL VIDEO INPUTS FOR THE BASE WIDE CCTV SYSTEM SHALL BE CAPABLE OF BEING CONNECTED TO EITHER MULTIPLEXER/SWITCHER/DVR TO ALLOW QUICK AND EASY RECONFIGURATION OF THE CCTV SYSTEM INPUT AND DISPLAYS.
18. THE CONTRACTOR SHALL COORDINATE WITH THE LOCAL DIOM, DPW, AND SECURITY PERSONNEL TO PROVIDE NEW VIDEO CONNECTIONS TO EXISTING CAMERAS, TO REMAIN INPLACE AND/OR BE REPOSITIONED. THE CONTRACTOR SHALL PROVIDE DIRECT CONNECTION FROM THE EXISTING CAMERAS TO THE NEW MP STATION VIA EXISTING AERIAL AND DUCT SYSTEM AND INSTALL NEW 6 STRAND FIBER OPTIC CABLING. THE CONTRACTOR SHALL PROVIDE A NEW MESSAGE CABLE SUPPORT SYSTEM AS REQUIRED.

CARD ACCESS NOTES:

1. ALL WIRING SHALL BE ROUTED IN CONDUIT AS INDICATED OR SHOWN.
2. CARD READERS SHALL BE MOUNTED AT A.D.A. APPROVED HEIGHT AT HANDICAP ENTRANCES.
3. WIRE ALL MAGNETIC LOCKS AND ELECTRONIC STRIKES VIA FIRE ALARM RELAY SO AS TO RELEASE DOORS DURING ANY FIRE ALARM CONDITION. ALL WIRING SHALL BE ROUTED IN CONDUIT.
4. CONTRACTOR SHALL SUPPLY THE REQUIRED NUMBER OF POWER SUPPLIES (24VDC), PLUS 25% SPARE CAPACITY (WATT CAPACITY) FOR EACH POWER SUPPLY. MAXIMUM OF FOUR DOORS ON ONE POWER SUPPLY TO MINIMIZE FAILURE (DOOR RELEASE) DUE TO FAULTY POWER SUPPLY.
5. CONTRACTOR SHALL PROVIDE THE NUMBER OF CONTROLLERS, CARD READER MODULES, I/O MODULES, ETC. REQUIRED FOR THE CARD ACCESS SYSTEM.
6. ALL ELECTRIC STRIKES SHALL BE PROVIDED WITH BALANCED MAGNETIC SWITCHES WHICH SHALL ALARM LOCAL DOOR ALARM AND ALARM IN SECURITY ROOM DURING UNAUTHORIZED ENTRY OR EXIT. THE ELECTRIC STRIKES WIRING SHALL BE SUPERVISED BY THE CARD ACCESS CONTROLLER.
7. ROUTE ALARM INPUT TO CCTV MULTIPLEXER. COORDINATE WITH INSTALLATION OF CCTV SYSTEM. ALARM EVENT SHALL RECORD OPENING OF DOORS AND AUTOMATICLY BE DISPALYED AT THE CENTRAL MONITOR. THE MIN. RECORD TIME SHALL BE DETERMINED FOR THE DOOR.
8. WIRING FOR CARD READERS AND BETWEEN CONTROLLERS SHALL BE IN ACCORDANCE WITH CARD ACCESS SYSTEM MANUFACTURER'S RECOMMENDATION.

NOTE: ALL DIMENSIONS SHOWN ARE IN MILLIMETERS.

US Army Corps of Engineers
New York District

| Symbol | Description | Date | App. |
|---|---|---|---|

Designed by: | Date: | Size: | Rev.
Dwn by: | Ckd by: | Drawing file no.:
Reviewed by: | Drawing code:
Submitted by: | Plot date: 05-JAN-2006 16:08 | Plot by: e3endwab | Style: G:\SERVICE\STD\D000

U.S. ARMY ENGINEER DISTRICT
CORPS OF ENGINEERS
NEW YORK, NEW YORK

File name: S:\Service\military\Fort Hamilton\MPBp\Electrical\MPBp_E-703.dgn

PN 52224
MILITARY POLICE STATION
FORT HAMILTON, NY

SECURITY RISER DIAGRAM

Sheet reference number:
E–703

Submitted by: e3endwab
Plot Date: 05-JAN-2006 16:08
Plot by: e3endwab
Plot Style: G:\SERVICE\STD\D000.stb
Pattern: G:\SERVICE\STD\D000.pat
Setup: G:\SERVICE\STD\D000.stp
File name: S:\Service\military\Fort Hamilton\MPBp\Electrical\MPBp_E-703.dgn

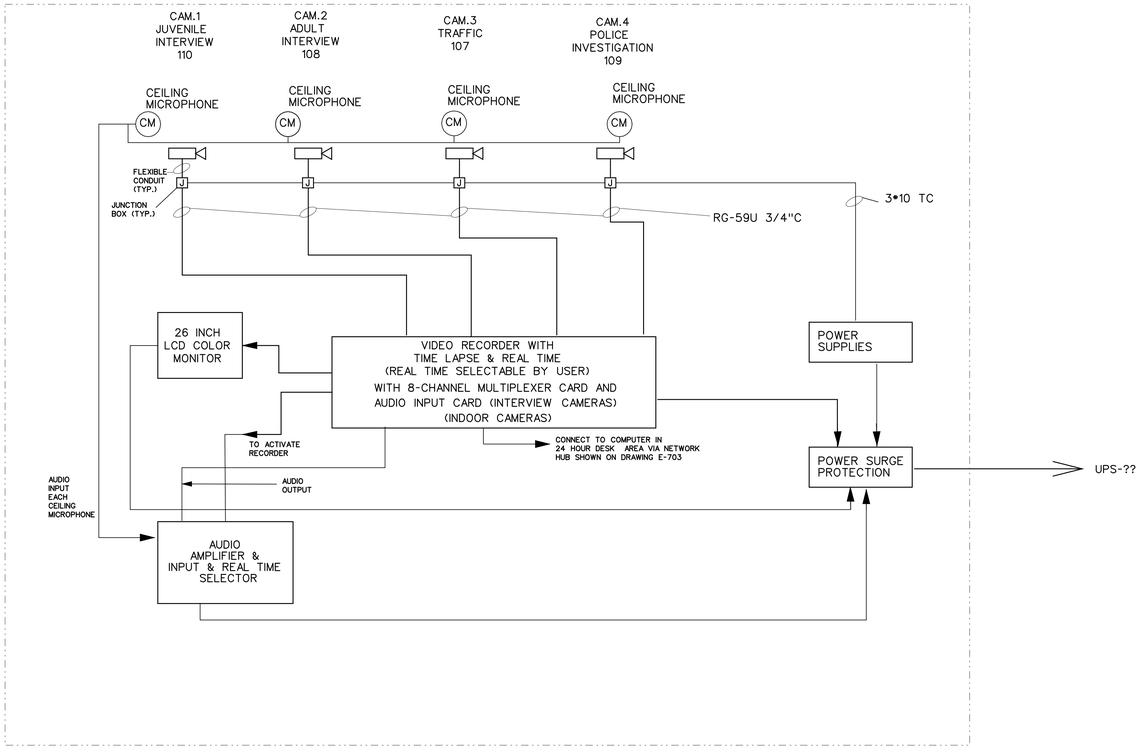


CCTV NOTES:

1. ALL COAX CABLE SHALL BE PLENUM RATED 95% COPPER BRAID SHEILD. ALL WIRING SHALL BE ROUTED VIA CONDUIT SYSTEM.
2. CONTRACTOR SHALL VERIFY CAMERA LENS SIZES AND EXACT POSITIONING OF CAMERAS. ALL NEW CAMERAS SHALL BE COLOR.
3. CONTRACTOR SHALL PROVIDE ALL REQUIRED POWER SUPPLIES.
4. CONTRACTOR SHALL COORDINATE POWER REQUIREMENTS FOR ALL CCTV EQUIPMENT.
5. ALL EXTERIOR AND APPARATUS AREA MOUNTED CAMERAS SHALL HAVE ENCLOSURES WITH HEATER, DEFOGGER, MOUNTS & POWER SUPPLY (120VAC TO 24VAC).
6. ENTRY AFTER NORMAL WORKING HOURS SHALL ALARM TIME LAPSE RECORDERS FOR CAMERAS, VIA CARD ACCESS SYSTEM. COORDINATE WITH CARD ACCESS SYSTEM INSTALLATION.
7. ALL CCTV EQUIPMENT SHALL BE LOCATED IN 24 HOUR DESK AREA AND INTERVIEW ROOM AS SHOWN.
8. PROVIDE SURGE PROTECTION FOR CCTV EQUIP., POWER LINE, COAX, ETC. AS PER SPEC.
9. PROVIDE GROUND LOOP CORRECTORS FOR COAX LINES.
10. LENS SHALL HAVE AUTO IRIS. EXACT LENS SIZE TO BE DETERMINED BY THE CONTRACTOR.
11. THE CARD ACCESS SYSTEM SHALL BE INTERFACED TO THE CCTV SYSTEM TO SEND AN ALARM TO ACTIVATE THE TIME LAPSE RECORDER SYSTEM THROUGH THE DVR ALARM INPUT FOR 1 MINUTES.
12. THE EXISTING CCTV EQUIPMENT CURRENTLY INSTALLED IN THE EXISTING MP STATION SHALL BE INVENTORIED, BE REMOVED AND TURNED OVER TO THE USING AGENCY UPON COMPLETION OF THE NEW FACILITY.

# INTERVIEW CCTV RISER DIAGRAM

NOTE: ALL DIMENSIONS SHOWN ARE IN MILLIMETERS.

US Army Corps of Engineers
New York District

| Symbol | Description | Date | App. |
|---|---|---|---|

U.S. ARMY ENGINEER DISTRICT
CORPS OF ENGINEERS
NEW YORK, NEW YORK

Designed by:
Dwn by:
Ckd by:
Reviewed by:
Submitted by:
Date:
Size:
Rev.:
Drawing file no.:
Drawing code:
Plot date: 05-JAN-2006 16:28
Plot by: admin
Scale: 0.1000x0.1000000

File name: S:\Benson\military\fortHamilton\MPBldg\Security\MPBld_E-704.dgn

PN 52224
MILITARY POLICE STATION
FORT HAMILTON, NY

SECURITY RISER DIAGRAM

Sheet reference number:
E–704

Submitted by: e3endfab
Plot Date: 05-JAN-2005 16:28
Setfiles: admin:hlsrpt01 Hamilton:pdf01:hlsrpt01:pdf01:E_704.cfg

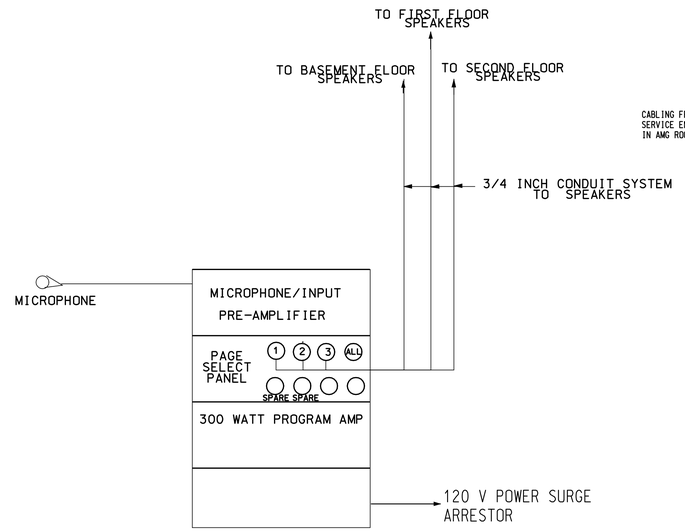


BUILDING PUBLIC ADDRESS SYSTEM
NTS

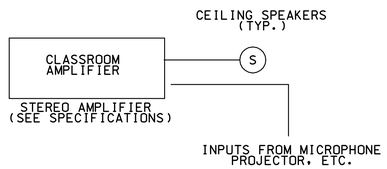


CLASSROOM/ CONFERENCE ROOM SOUND SYSTEM
(SEE SPECIFICATIONS FOR SYSTEM)

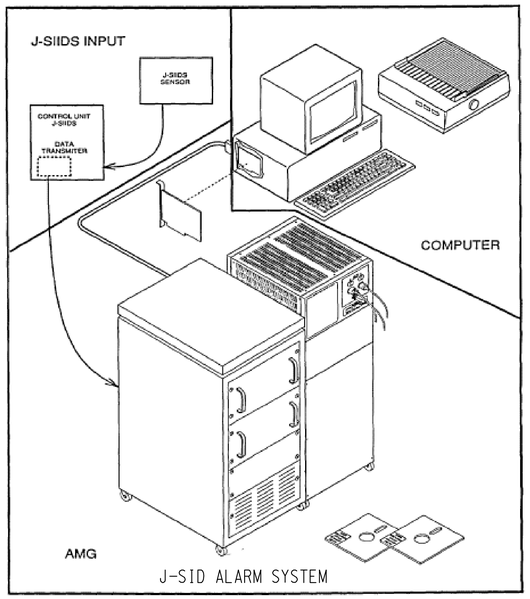


J-SID ALARM SYSTEM

ALARM MOINTOR GROUP
FUNCTION BLOCK DIAGRAM

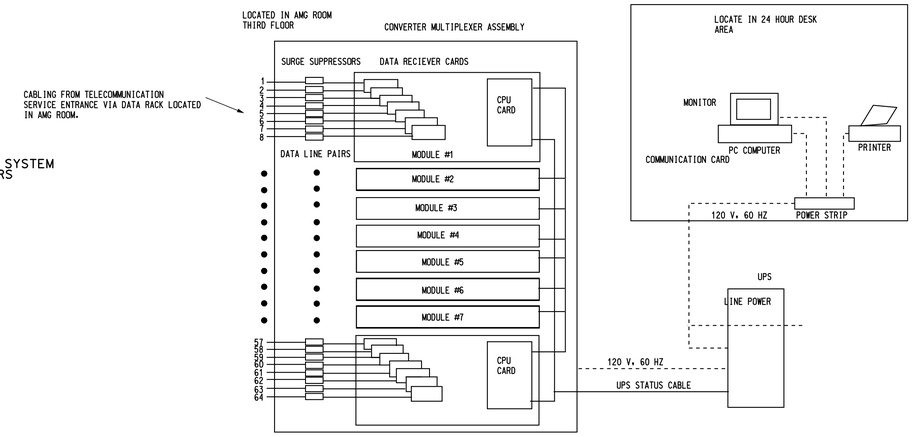


J-SID ALARM SYSTEM-SECOND FLOOR AMG/SERVICE ROOM

NOTES:

1. THE CONTRACTOR SHALL RELOCATE AND RE-CONNECT EXISTING ALARM PAIR TO THE RELOCATED J-SID UNIT IN THE AMG ROOM SECOND FLOOR. THE EXISTING ALARM SYSTEMS ARE AS FOLLOWS: MUSEUM, POST EXCHANGE (PX), PHARMACY, ARMS ROOM 407, COMMISSARY, FRAME ROOM BLDG 230, COMMUNITY CENTER & CLUB, BLDG 401. EACH REMOTE J-SID SIGNAL SHALL BE TESTED FOR 1070HZ/1270HZ OSCILLATION SIGNAL PRIOR TO DISCONNECTION AND DOCUMENT ANY ABNORMAL CONDITIONS.

2. THE CONTRACTOR SHALL COORDINATE WITH THE SECURITY CHIEF AND LOCAL DOIM WHILE REFORMING THE RELOCATION OF THE J-SID SYSTEM AND SIGNAL LINES. THE CONTRACTOR SHALL SUBMIT A PLAN FOR THE J-SID AND SIGNAL LINE RELOCATION FOR APPROVAL BY THE RESIDENT ENGINEER.

3. SEE TELECOMMUNICATION DRAWING FOR RELATED WORK REQUIRED.

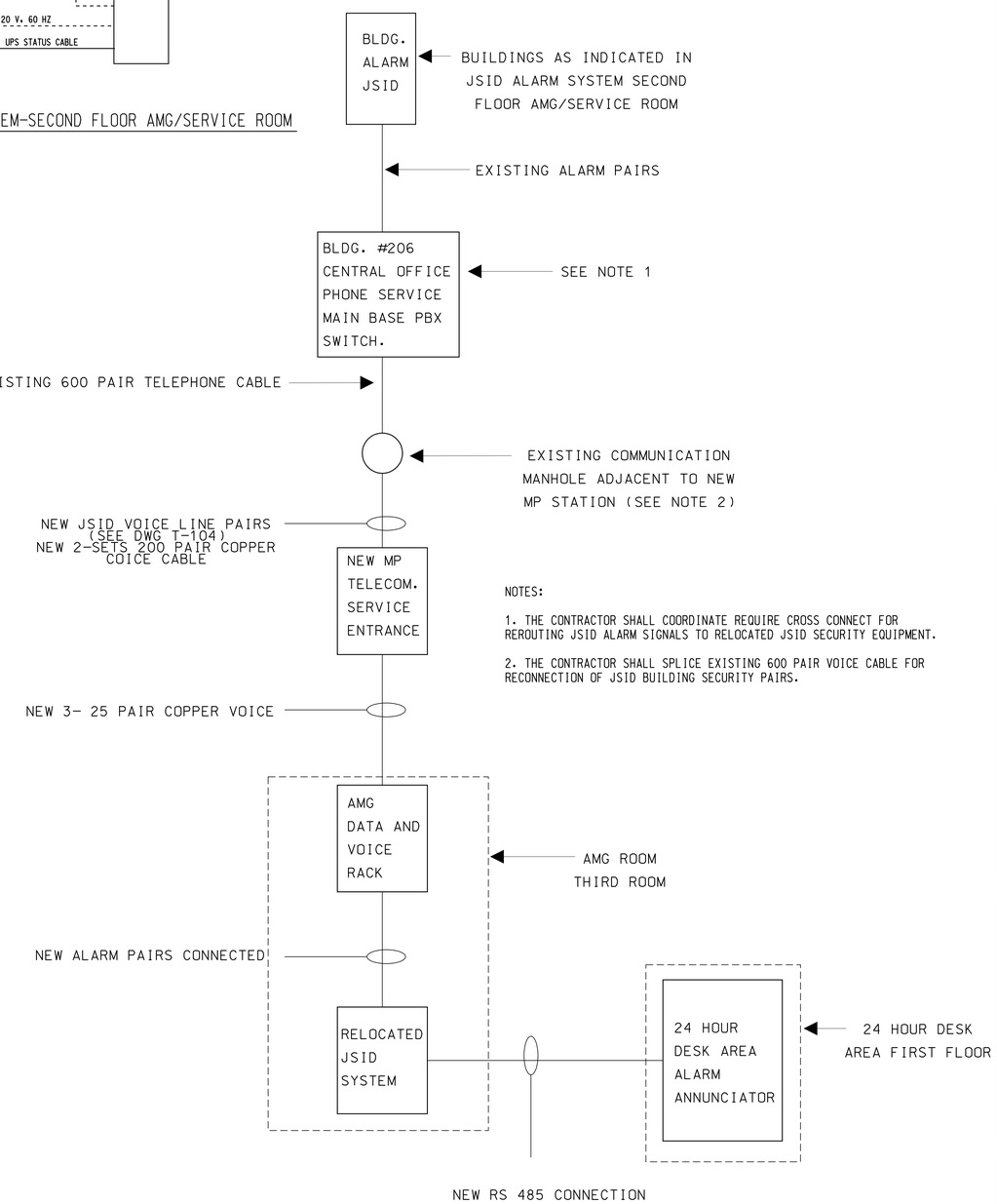


NOTES:

1. THE CONTRACTOR SHALL COORDINATE REQUIRE CROSS CONNECT FOR REROUTING JSID ALARM SIGNALS TO RELOCATED JSID SECURITY EQUIPMENT.

2. THE CONTRACTOR SHALL SPLICE EXISTING 600 PAIR VOICE CABLE FOR RECONNECTION OF JSID BUILDING SECURITY PAIRS.

NOTE: ALL DIMENSIONS SHOWN ARE IN MILLIMETERS.

US Army Corps of Engineers
New York District

| Symbol | Description | Date | Appr. |
|---|---|---|---|

U.S. ARMY ENGINEER DISTRICT
CORPS OF ENGINEERS
NEW YORK, NEW YORK

Designed by: | Date: | Size: | Rev.:
Dwn by: | Ckd by: | Drawing file no.:
Reviewed by: | Drawing code:
Submitted by: | Plot date: 05-JAN-2005 16:28 | Plot by: eduardwa | Scale: N/A/0000000000

File name: S:\Missions\Military\Fort Hamilton\JsiIfiles\Drawings\JsiIfile_E-705.dgn

PN 52224
MILITARY POLICE STATION
FORT HAMILTON, NY

# PUBLIC ADDRESS SYSTEM

Sheet reference number:
E-705

Submitted by: e3endfwb
pw:\\ferdomain\ccpw\ny\ny1\hamilton\proj\ny1ccfhtc\ccfhtc0002\ny1 E-705.dgn
Plot Date: 05-JAN-2005 16:28

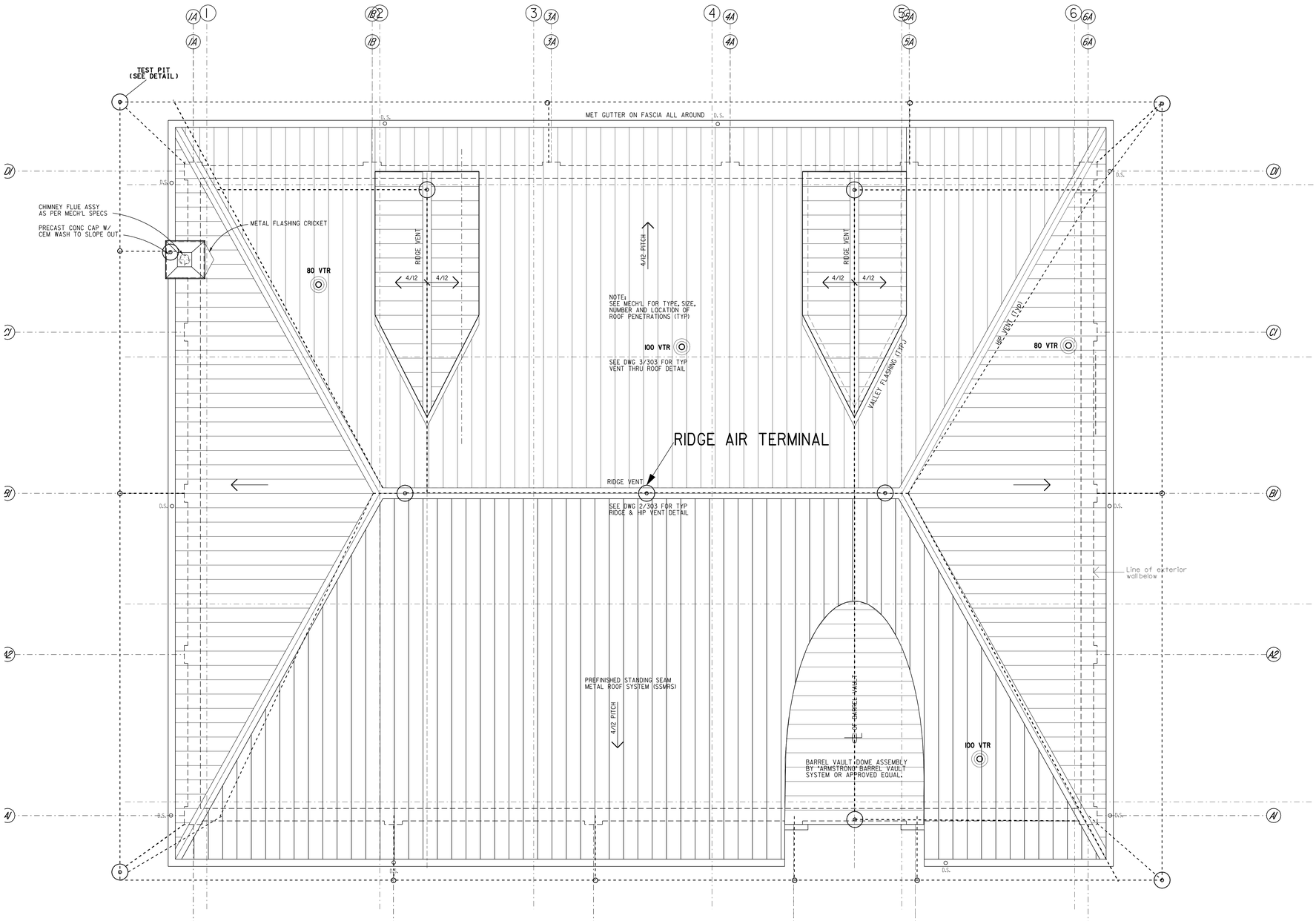


ROOF PLAN
SCALE 1:50

GROUNDING PLAN
SCALE: 1:50M

SEE SHEET E-801 FOR LEGEND

ALL DIMENSIONS ARE SHOWN IN MILLIMETERS.

US Army Corps of Engineers
New York District

| Symbol | Description | Date | Appr. |
|---|---|---|---|

Designed by:
Dwn by: Ckd by:
Reviewed by:
Submitted by:
Date:
Size: Rev.:
Drawing file no.:
Drawing code:
Plot date: 05-JAN-2005 16:09
Plot by: eSenchko
Scale: 60.000000:1.000000
File name: S:\Milcom\military\Fort Hamilton\AFB\a\Electrical\AFB\a E-801.dgn

U.S. ARMY ENGINEER DISTRICT
CORPS OF ENGINEERS
NEW YORK NEW YORK

PN: 52224
MILITARY POLICE STATION
FORT HAMILTON, NEW YORK

ROOF LIGHTNING & GROUNDING PLAN

Sheet reference number:
E-801

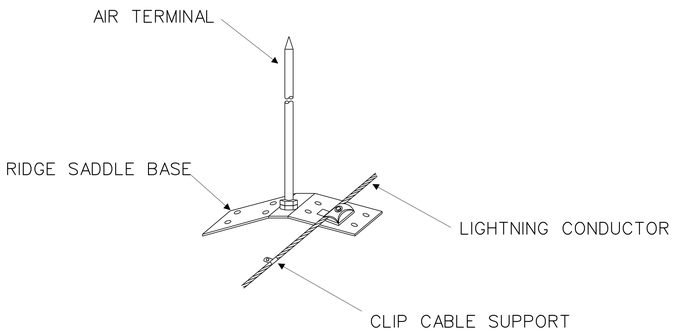


DETAIL "E"
RIDGE SADDLE AIR TERMINAL DETAIL
N.T.S.

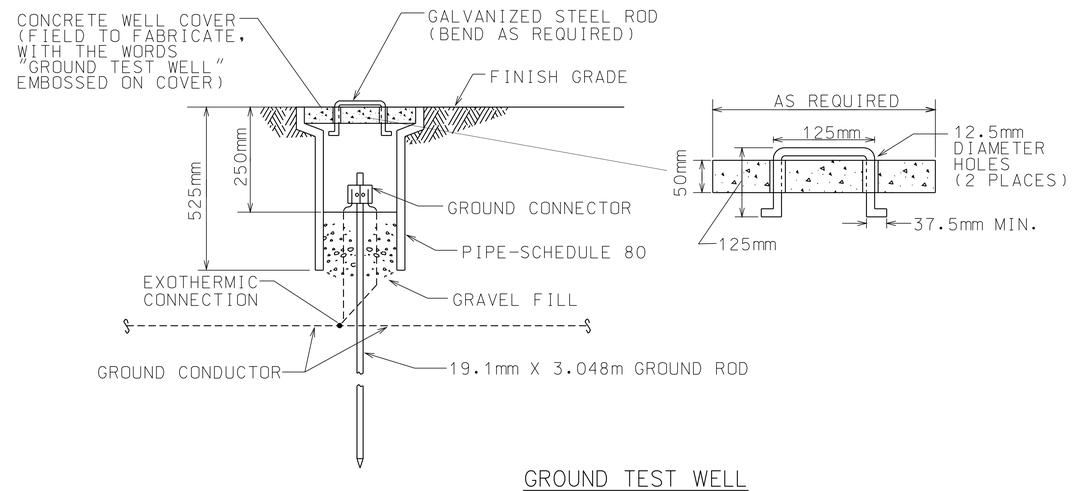


GROUND TEST WELL
NO SCALE

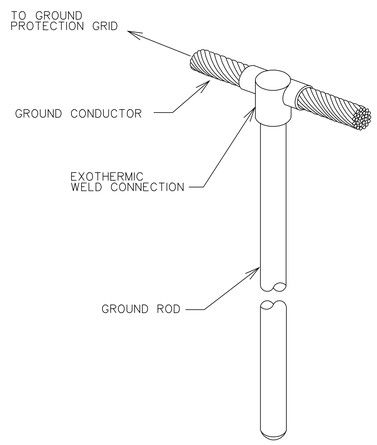


GROUND ROD DETAIL
NO SCALE

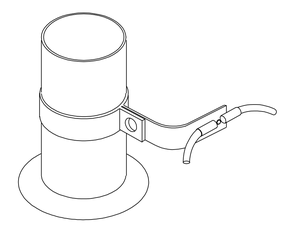

TYPICAL V.T.R. BOND DETAIL "E"
NO SCALE

Legend

10x600 SOLID COPPER AIR TERMINAL

CLASS ICOPPER LIGHTNING CONDUCTOR (32 STRANDS OF 2 SQ. MM WIRE - 97.7KG PER 305 METERS) - SECURE TO BUILDING AT 915 MM INTERVALS. SEE AIR TERMINAL DETAILS FOR METHOD OF FASTENING.

GROUNDING COUNTERPOISE CONDUCTOR 95 SQ. MM BARE COPPER

19.1MM X 3.049M COPPER GROUND ROD

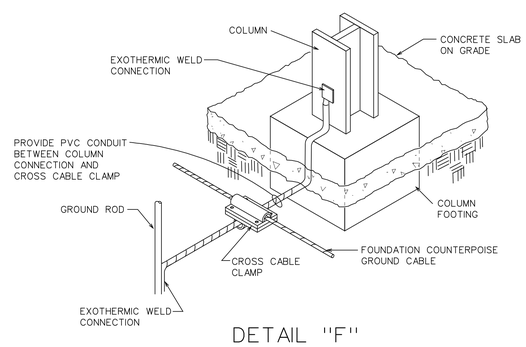


DETAIL "F"
BUILDING GROUND LOOP COUNTERPOISE
TYPICAL COLUMN BASE GROUNDING DETAIL
NO SCALE

NOTES:

1. THE COMPLETED INSTALLATION SHALL MEET THE REQUIREMENTS OF THE NATIONAL FIRE PROTECTION ASSOCIATION'S LIGHTNING PROTECTION CODE 1992 (NFPA 78) AND THE INSTALLATION REQUIREMENTS FOR LIGHTNING PROTECTION SYSTEMS, UL96A OF UNDERWRITERS LABORATORIES INC. THE MASTER LABEL SHALL BE FURNISHED TO THE OWNER UPON COMPLETION.
2. COPPER LIGHTNING PROTECTION SYSTEM COMPONENTS SHALL NOT BE MOUNTED ON ALUMINUM OR GALVANIZED STEEL SURFACES. ALUMINUM COMPONENTS SHALL BE USED TO AVOID ELECTROLYTIC CORROSION.
3. GROUNDED METAL BODIES WITHIN THE BONDING DISTANCE DETERMINED BY BONDING DISTANCE REQUIREMENTS OF NFPA 780-1995 SHALL BE BONDED TO THE SYSTEM USING BONDING CONDUCTORS AND FITTINGS IN ACCORDANCE WITH CODE REQUIREMENTS.
4. ROUTE 95 SQ.MM GROUNDING CONDUCTOR COUNTERPOISE TO GROUNDING RODS IN 750MM DEEP TRENCH. GROUNDING CONDUCTOR SHALL BE LOCATED A MINIMUM OF 1000MM FROM LEADING EDGE OF FOUNDATION.
5. ENSURE ALL VENT PIPES, AND OTHER PIPE PENETRATIONS ARE BONDED TO THE GROUNDING CONDUCTOR (ALL BONDS TO THE PIPES ARE NOT SHOWN). ENSURE ALL EXHAUST HOODS ARE BONDED (VIA UL APPROVED BOLT CONNECTION) TO GROUNDING CONDUCTOR. SEE MECHANICAL AND ARCHITECTURAL ROOF PLANS FOR LOCATION OF VENT PIPES, EXHAUST HOODS, ETC.
6. THRU-ROOF PENETRATIONS SHALL BE KEPT TO MINIMUM.

ALL DIMENSIONS ARE SHOWN IN MILLIMETERS.

US Army Corps of Engineers
New York District

| Symbol | Description | Date | Appr. |
|---|---|---|---|

U.S. ARMY ENGINEER DISTRICT
CORPS OF ENGINEERS
NEW YORK, NEW YORK

Designed by: | Date: | Size: | Rev.:
Dwn by: | Ckd by: | Drawing file no.:
Reviewed by: | Drawing code:
Submitted by: | Plot date: 05-JAN-2005 16:29 | Plot by: sdenchfab | Scale: 60.000000:1.000000
File name: S:\liaison\military\Fort Hamilton\MPdia\Electrical\MPdia_E-802.dgn

PN: 52224
MILITARY POLICE STATION
FORT HAMILTON, NEW YORK

LIGHTNING & GROUNDING EQUIPMENT DETAILS

Sheet reference number:
E-802

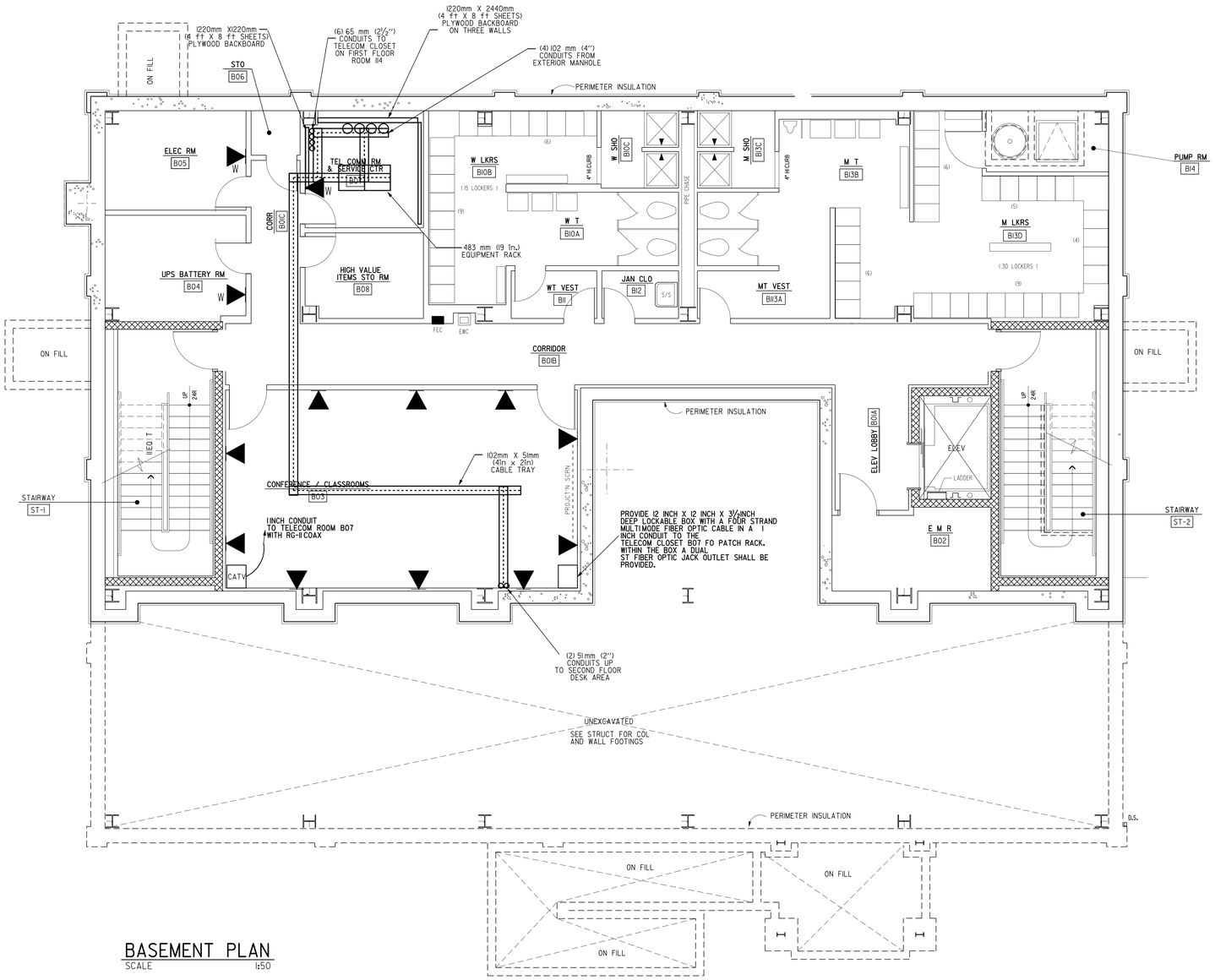


## BASEMENT PLAN

SCALE 1:50

SEE SHEET T-105 FOR OUTLET TYPES

W - DENOTES WALL SINGLE RJ-45 OUTLET
ALL OTHERS ADMINSTRATIVE TYPE CONTAIN (3) RJ-45 OUTLETS

GRAPHIC SCALE

NOTE: ALL DIMENSIONS SHOWN ARE IN MILLIMETERS.

US Army Corps of Engineers
New York District

| Symbol | Description | Date | Appr. |
|---|---|---|---|

| Rev. | Size |
|---|---|
| | |

Designed by: | Date:
Dwn by: | Ckd by:
Reviewed by: | Drawing code:
Submitted by: | Drawing file no.:
Plot date: 05-JAN-2005 16:29
Plot by: edwardwa
Date: 10/08/2004
File name: S:\divisions\military\ny\branches\plans\military\Electrical\Utilities T-100.dgn

U.S. ARMY ENGINEER DISTRICT
CORPS OF ENGINEERS
NEW YORK, NEW YORK

PN. 52224
MILITARY POLICE STATION
FORT HAMILTON, NY

# TELECOMMUNICATIONS BASEMENT PLAN

Sheet reference number:
T-100

Submitted by: edwardwa
Plot Date: 05-JAN-2005 16:29
pentlandd@mail.usace.army.mil
S:\pentlandd\military\PM-51 hamilton\MP51\pentlandd\MP51 T-100.dgn

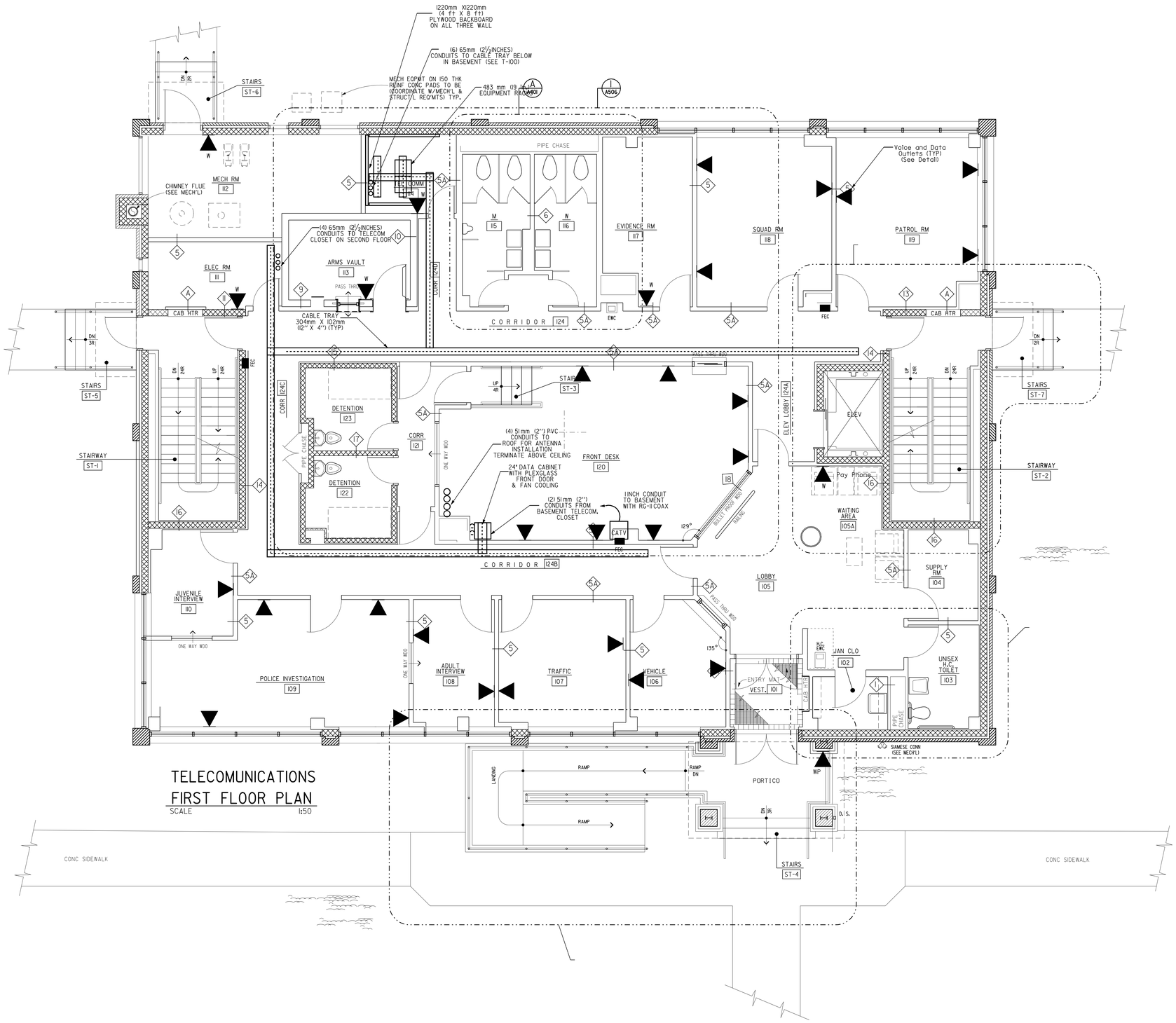


# TELECOMUNICATIONS FIRST FLOOR PLAN

SCALE 1:50

NOTE: ALL DIMENSIONS SHOWN ARE IN MILLIMETERS.

US Army Corps of Engineers
New York District

| Symbol | Description | Date | Appr. |
|---|---|---|---|

Designed by:
Dwn by: Ckd by:
Reviewed by:
Submitted by:
Date:
Size: Rev:
Drawing code:
Drawing file no.:
Plot date: 05-JAN-2005 16:29
Plot by: adanchuk
File name: S:\Mission\Military\Fort Hamilton\Utility Electrical\Utility 1-100.dgn
File size: 6000000000

U.S. ARMY ENGINEER DISTRICT
CORPS OF ENGINEERS
NEW YORK, NEW YORK

PN 52224
MILITARY POLICE STATION
FORT HAMILTON, NY

TELECOMUNCATIONS
FIRST FLOOR PLAN

Sheet reference number:
T-101

Submitted by: adanchwo
pwtfloc=adamilitary=pf01=hamilton=MPS=Sec01=floor=MPS01 T-100.dgn
Plot Date: 05-JAN-2005 16:29

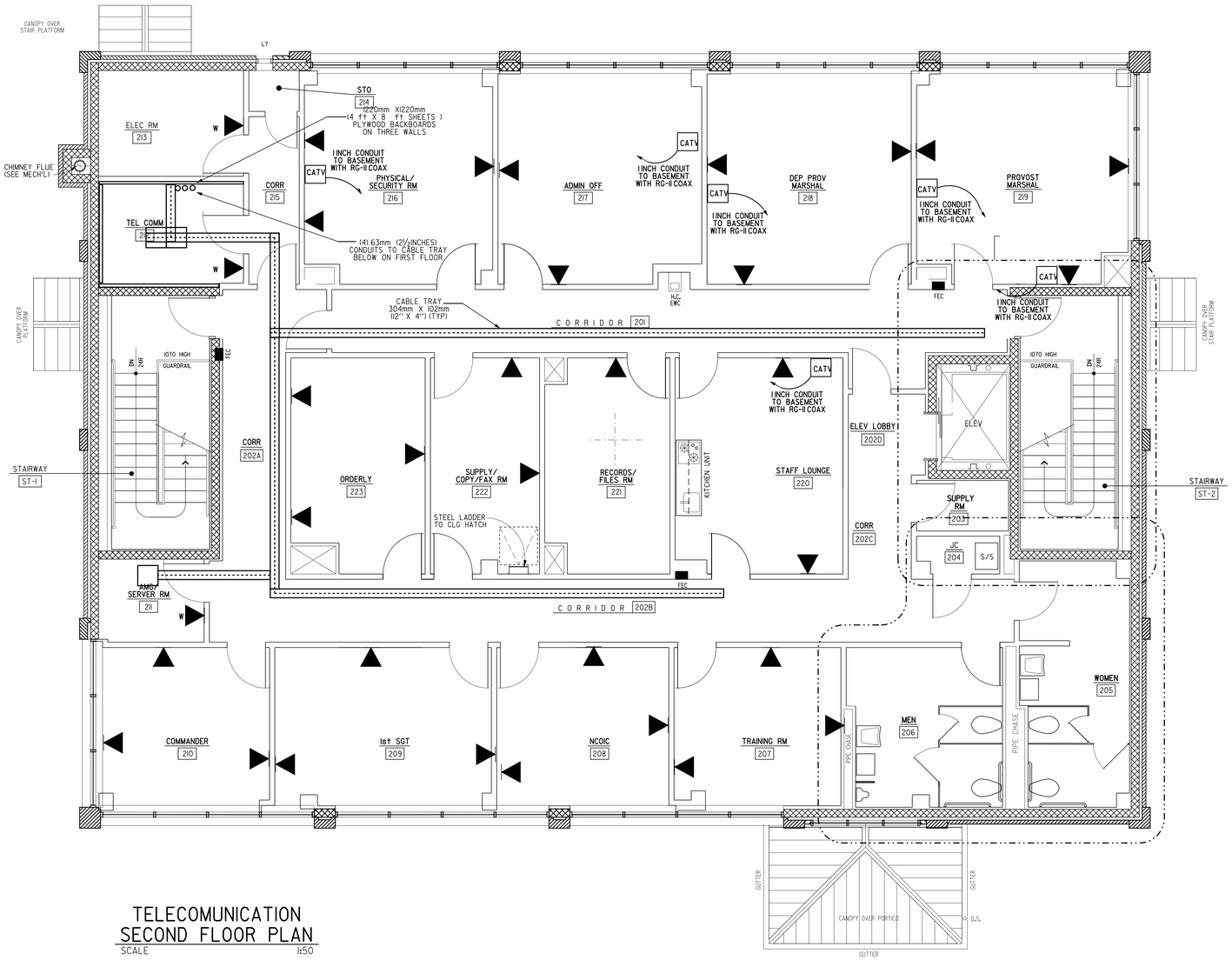


# TELECOMUNICATION SECOND FLOOR PLAN

SCALE 1:50

NOTE: ALL DIMENSIONS SHOWN ARE IN MILLIMETERS.

US Army Corps of Engineers
New York District

| Symbol | Description | Date | Appr. |
|---|---|---|---|

| | | | |
|---|---|---|---|
| Designed by: | | Date: | Size / Rev: |
| Dwn by: | Ckd by: | Drawing file no.: | |
| Reviewed by: | | Drawing code: | |
| Submitted by: | | Plot date: 05-JAN-2009 16:29<br>Plot by: e. dondero<br>Scale: 6/00000/00000 | |

File name: S:\Mission\military\Fort Hamilton\Utility\Electrical\Utility_1-02.dgn

U.S. ARMY ENGINEER DISTRICT
CORPS OF ENGINEERS
NEW YORK, NEW YORK

PN 52224
MILITARY POLICE STATION
FORT HAMILTON, NY

# TELECOMUNICATIONS SECOND FLOOR

Sheet reference number:
T-102

Submitted by: e3endfwb
Location:cadwin1\projects\ Hamilton\MPS\SAE\Electrical\T-102.dgn
Plot Date: 05-JAN-2009 16:29

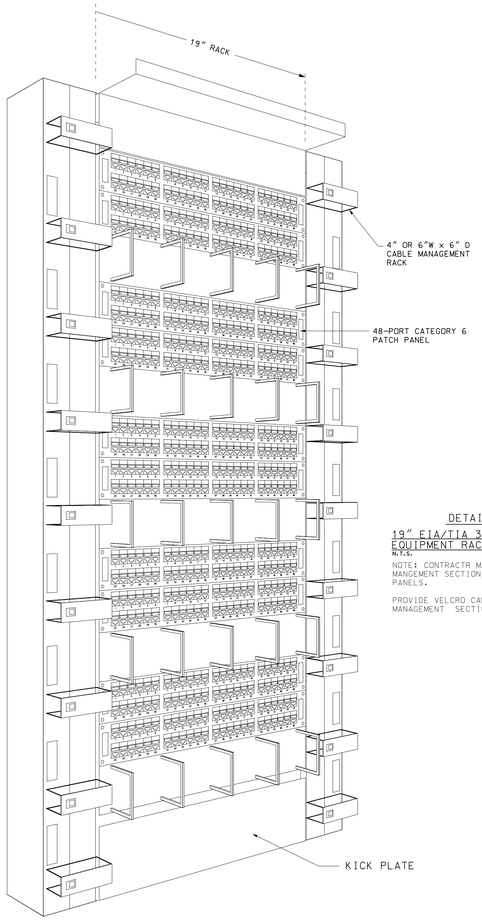


DETAIL

19" EIA/TIA 310 COMPLIANT EQUIPMENT RACK

N.T.S.

NOTE: CONTRACTR MAY USE ONE WIRE MANGEMENT SECTION FOR (2) 110 PATCH PANELS.

PROVIDE VELCRO CABLE TIE WRAPS WITH WIRE MANAGEMENT SECTIONS.

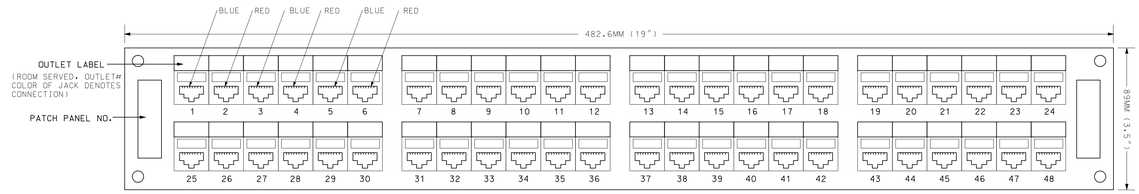


NOTE:

1. PROVIDE WRITE-ON AREA FOR PANEL LABELLING.
2. PANEL SHALL BE PROVIDED WITH OUTLETS RATED FOR CAT 6 WITH T568B CONFIGURATION. AND HAVE 110-TYPE PUNCH DOWN TERMINATION OPENINGS ON REAR.
3. ALL JACKS SHALL BE COLOR CODED AND MATCH CABLE COLORS. THE CONTRACTOR SHALL SUBMIT COLOR CODING FOR APPROVAL.

DETAIL

48-PORT DATA/VOICE PATCH PANEL

NO SCALE

CABLING TO COLOR CODED JACKS SHALL MATCH THAT USED FOR THE JACK.
(i.e. BLUE JACKS SHALL HAVE BLUE CABLING RED JACKS SHALL HAVE RED CABLING: COLORS SHOWN FOR EXAMPLE ONLY)

NOTE: ALL DIMENSIONS SHOWN ARE IN MILLIMETERS.

US Army Corps of Engineers
New York District

| Symbol | Description | Date | Appr. |
|---|---|---|---|

U.S. ARMY ENGINEER DISTRICT
CORPS OF ENGINEERS
NEW YORK, NEW YORK

Designed by:
Dwn by:
Ckd by:
Reviewed by:
Submitted by:
Date:
Size:
Rev:
Drawing file no.:
Drawing code:
Plot date: 05-JAN-2005 16:09
Plot by: ADMIN-ME
Scale: SC-N/A/N/A/N/A/N/A
File name: S:\Benson\military\fortHamilton\MPSq\Division\MPSq_T-103.dgn

PN 52224
MILITARY POLICE STATION
FORT HAMILTON, NY

# TELECOMMUNICATION DETAILS

Sheet reference number:

T-103

Submitted by: e3endfab
Plot Date: 05-JAN-2005 16:29
Settings: admin:User:pfort Hamilton:pMPS:Tbd:Tbd:pMPSq T-103.dgn

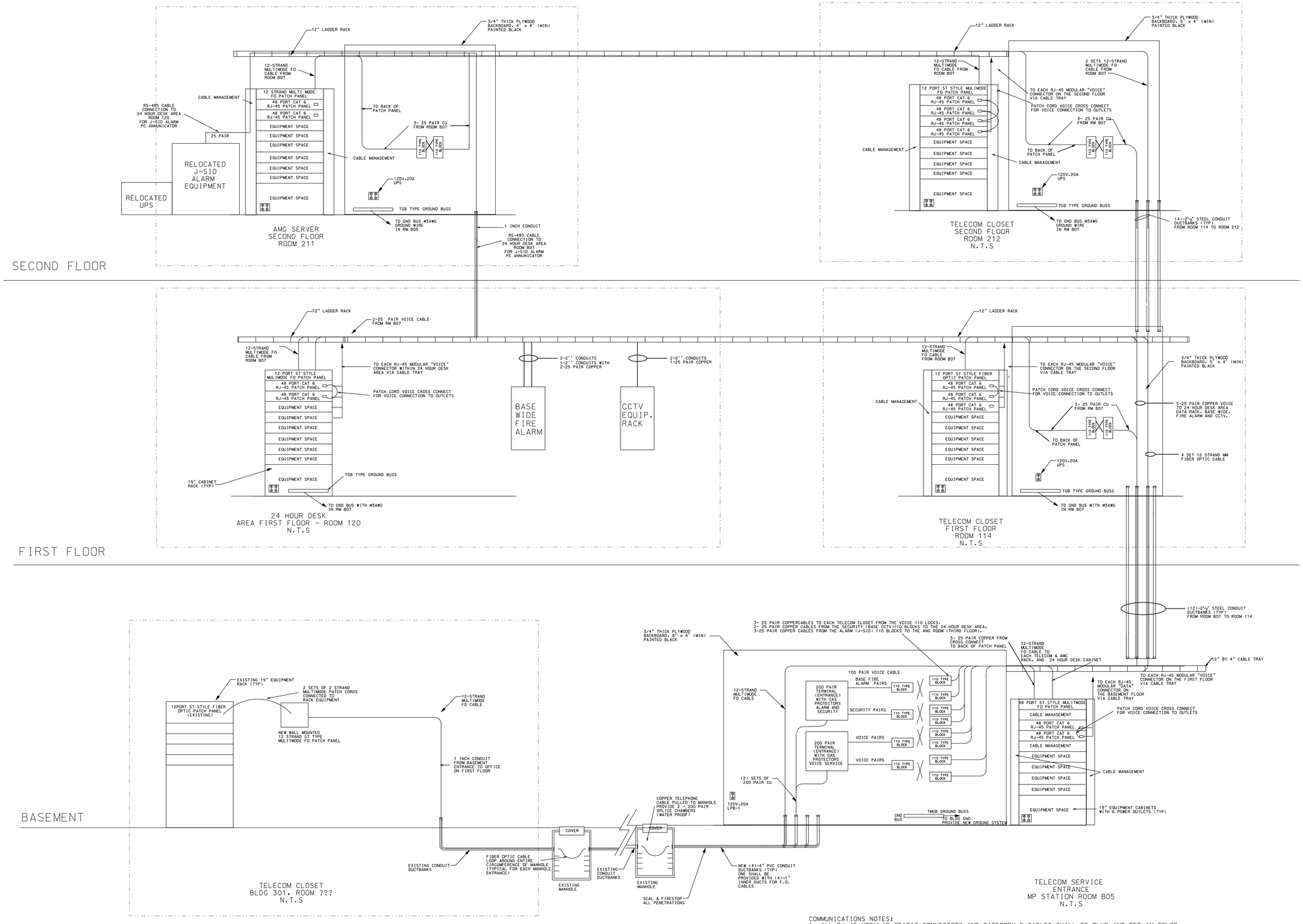


# COMMUNICATIONS VOICE AND DATA RISER DIAGRAM

COMMUNICATIONS NOTES:

1. ALL RJ-45 MODULAR "DATA" CONNECTORS AND CATEGORY 6 CABLES SHALL BE BLUE AND RED IN COLOR
2. ALL RJ-45 MODULAR "VOICE" CONNECTORS AND CATEGORY 6 CABLES SHALL BE WHITE IN COLOR.
3. EMPTY CONDUITS SHALL BE PROVIDED WITH PULL STRINGS.
4. ALL CONDUIT BENDS SHALL BE INSTALLED WITH SWEEP ELBOWS. CONDUITS MUST BE SECURELY FASTENED TO THE BUILDING FOUNDATION. FLOORS AND CEILINGS. PLASTIC BUSHINGS SHALL BE INSTALLED ON BOTH ENDS OF COMMUNICATION CONDUITS OR SLEEVES.
5. ALL FIBER OPTIC CABLES SHALL BE TERMINATED IN "ST" STYLE CONNECTORS ON BOTH ENDS. ALL TERMINATIONS SHALL BE CLEARLY LABELED TO SHOW DESTINATION OF EACH END OF THE FIBER OPTIC CABLE.
6. "DATA AND "VOICE" CABLES SHALL BE PHYSICALLY SEPARATED IN THE CABLE TRAYS AND LADDER RACKS.
7. SEE COMMUNICATIONS FLOOR PLANS FOR EXACT LOCATIONS OF ALL COMMUNICATIONS OUTLETS.
8. SEE COMMUNICATION SITE PLAN FOR LOCATION OF MANHOLES AND DUCTBANKS.
9. PROVIDE A FIBER OPTIC SERVICE LOOP IN THE CABLE TRAY, AT THE PATCH PANEL AND WITHIN EACH MANHOLE.
10. ALL CROSS CONNECTS SHALL BE MADE BY THE CONTRACTOR AND BE COORDINATED WITH THE LOCAL DOIM PERSONNEL. THIS SHALL INCLUDE FIRE ALARM, SECURITY ALARM, VOICE AND DATA.
11. ALL FIBER OPTIC CABLES SHALL BE PROVIDED WITH A SERVICE LOOP MIN. 8 FT PRIOR TO EACH TERMINATION POINT.
12. ALL SPARE CONDUITS SHALL BE PROVIDED WITH A NYLON PULL CORD AND BE SEALED WITH NONFLAMABLE FOAM.

NOTE: ALL DIMENSIONS SHOWN ARE IN MILLIMETERS.

US Army Corps of Engineers
New York District

| Symbol | Description | Date | Appr. |
|---|---|---|---|

Size: Rev:
Date:
Drawing file no.:
Drawing code:
Pltd date: 05-JAN-2005 16:29
Plot by: u_kbenfield
Scale: 1:100/1:200/50
Designed by:
Dwn by: Ckd by:
Reviewed by:
Submitted by:
File name: S:\Telecom\military\Architecture\Military Electrical\Mil Fa. T-001.dgn

U.S. ARMY ENGINEER DISTRICT
CORPS OF ENGINEERS
NEW YORK, NEW YORK

PN 52224
MILITARY POLICE STATION
FORT HAMILTON, NY

TELECOMMUNICATION
VOICE & DATA RISER DIAGRAM

Sheet reference number:
T-104

Submitted by: e3endfwb
pathtoc:usaeli1pf01 \mentlnsrvr\PS\ed\ftbr\ftbrpw\ftb T-104.dgn
Plot Date: 05-JAN-2005 16:29

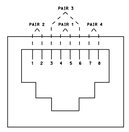


T568B MODULAR CONNECTOR
NO SCALE

NOTE:
CONFIGURATION DETAIL FOR 8 POSITION,
8 CONDUCTOR CAT 6 EIA/TIA-568-B WIRING

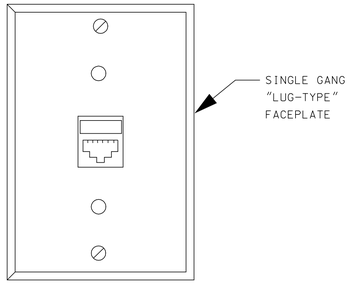


WALL OUTLET
NO SCALE

NOTE:
1- 8 PIN MODULAR CONNECTOR WITH
1-4 PAIR CAT 6 UTP CABLE

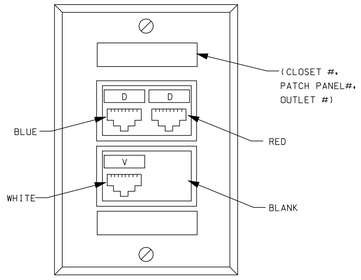


ADMINISTRATIVE OUTLET
WITH SINGLE GANG FACE PLATE
AND REDUCER RING
NO SCALE

NOTE:
(3) 8 PIN MODULAR CONNECTORS
WITH (4) EACH 4-PAIR CAT 6 UTP CABLE

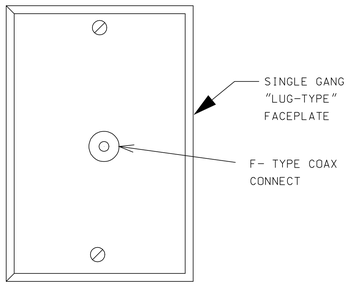


INSTALLED IN 24-HR DESK AREA
RJ-8 CABLE IN 1 INCH CABLE TO
TELECOM SERVICE ENTRANCE
ROOM-B05

CATV WALL OUTLET
NO SCALE

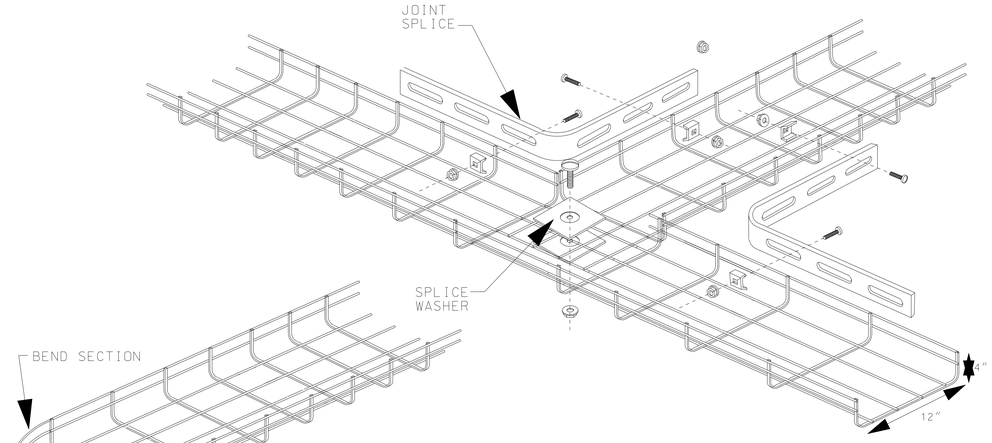


CABLE TRAYS CROSS SECTION DETAIL
NTS

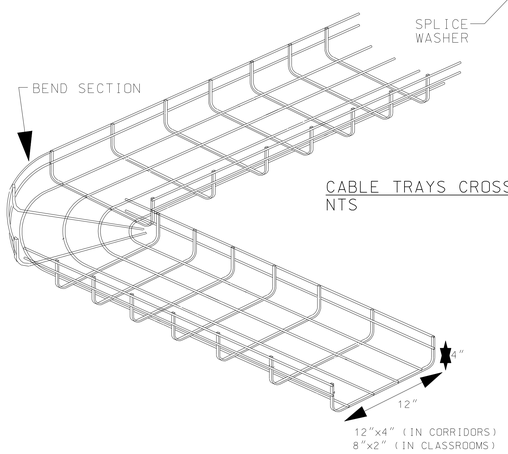


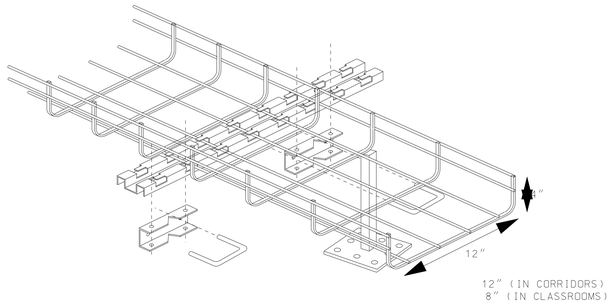


CEILING CABLETRAY WITH SUPPORT
CLAMP, BRACKETS
N.T.S.

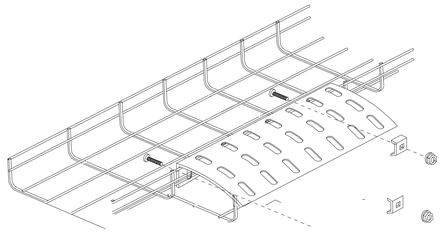

CABLE DROP-OUT TRANSITION
N.T.S.

NOTES
1. CABLE TRAY SHOULD BE SUITABLE FOR CEILING APPLICATIONS. THE CORRIDOR CABLE TRAY SIZE SHALL BE 12"W x 4"D. CLASSROOM CABLE TRAY SIZE SHALL BE 4"W x 2"D.

2. BASKET TYPE CABLE TRAY SHALL BE USED WITH IN THE TELECOMUNICATION CLOSETS AND BASEMENT CLASSROOM.

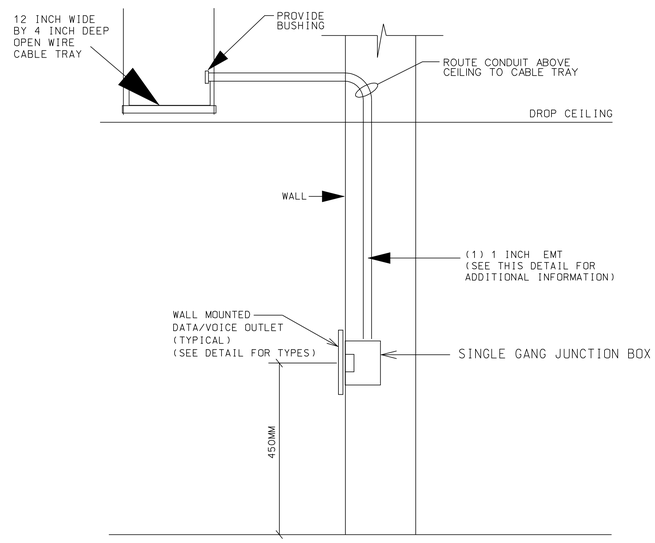


TYPICAL DATA OUTLET BOX INSTALLATION
N.T.S

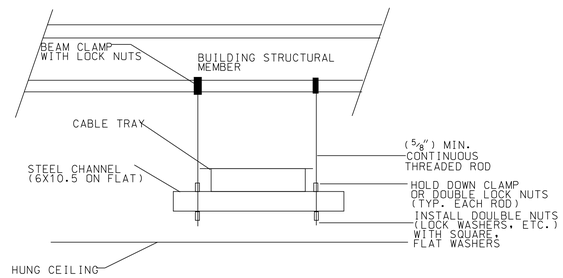


CABLE TRAY SUPPORT DETAIL
NTS

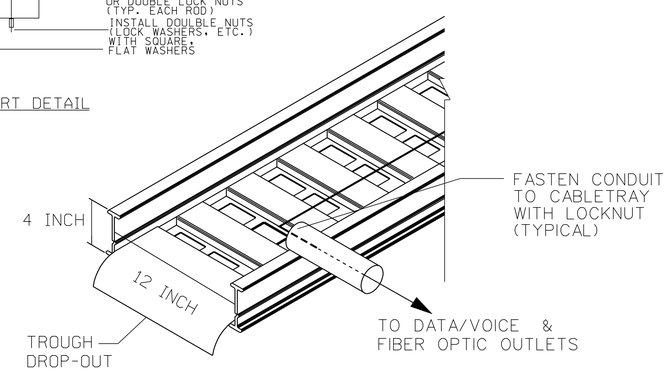


CABLE TRAY INSTALLED IN CORRIDOR
SHALL BE 12"X4"

VENTED TROUGH TYPE CABLE TRAY DETAIL
NTS

NOTE: ALL DIMENSIONS SHOWN ARE IN MILLIMETERS.

US Army Corps of Engineers
New York District

| Symbol | Description | Date | App. |
|---|---|---|---|

| Rev. | Size | Date: | Designed by: | Dwn by: | Ckd by: | Reviewed by: | Submitted by: | Drawing file no.: | Drawing code: | Plot date: 05-JAN-2005 16:29 | Plot by: eSandwo | Status: G-TODAYSDATE |
|---|---|---|---|---|---|---|---|---|---|---|---|---|

U.S. ARMY ENGINEER DISTRICT
CORPS OF ENGINEERS
NEW YORK, NEW YORK

File name: S:\Mission\Military\Fort Hamilton\Office\Drawings\ATFHs_T-105.dgn

PN 52224
MILITARY POLICE STATION
FORT HAMILTON, NY

TELECOMMUNICATION DETAILS

Sheet reference number:
T-105

Plot Dates 05-JAN-2005 16:29
Submitted by: eSandwo
S:\Mission\Military\Fort Hamilton\Office\Electric\atfhs1_t-105.dgn

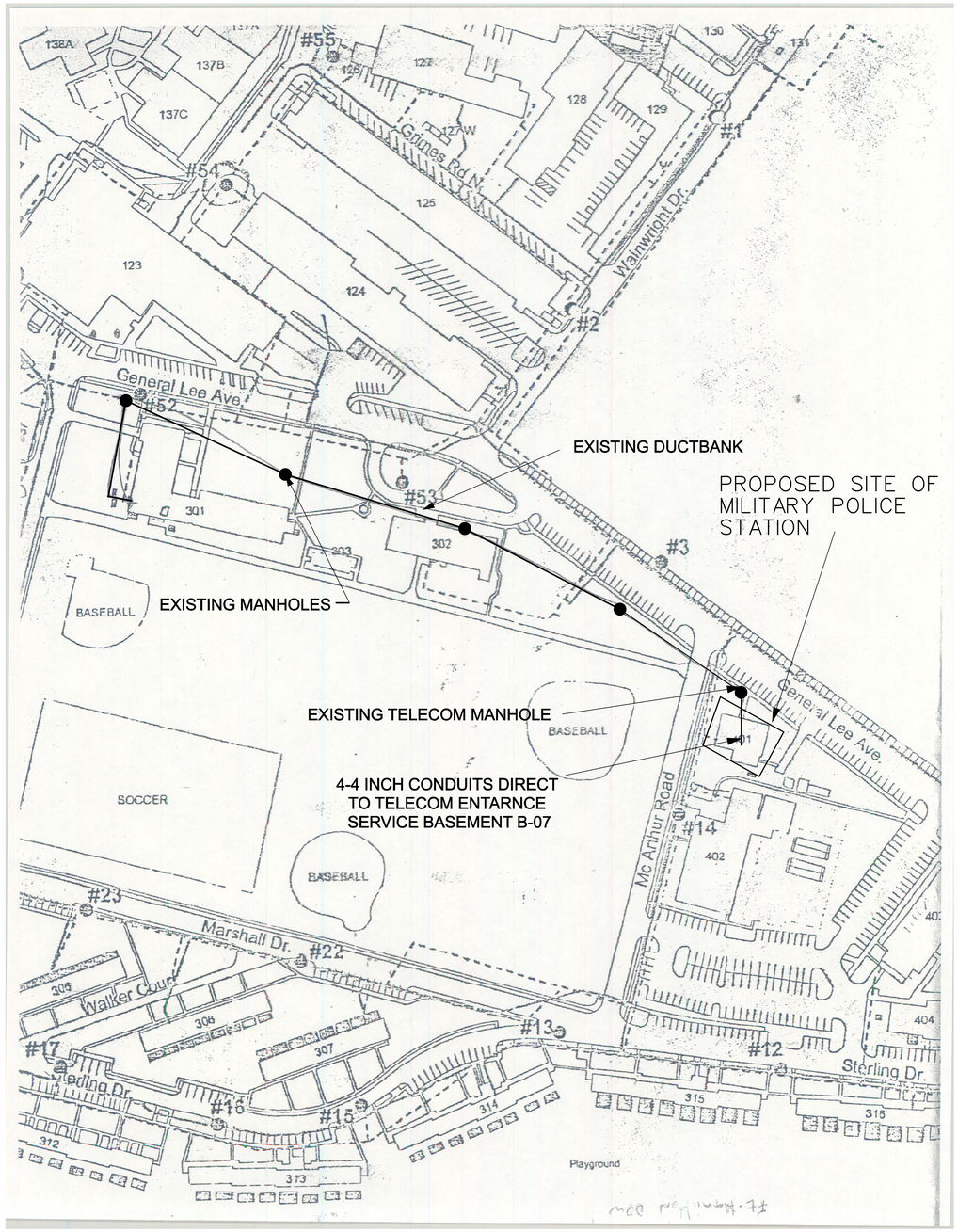


COMMUNICATIONS SITE PLAN
NTS

NOTES:

1. THE CONTRACTOR SHALL INSTALL IN EXISTING DUCT AND MANHOLES A NEW 12 STRAND MULTIMODE FIBER OPTIC (FO) CABLE FROM THE NEW MILITARY POLICE FACILITY TELECOMMUNICATIONS SERVICE ENTRANCE ROOM B07 TO BLDG. #301. IN BLDG. #301 THE FO CABLE SHALL CONTINUE INTO THE BUILDING TO THE FIRST FLOOR OFFICE CONTAINING THE LAN NETWORK EQUIPMENT. (SEE COMMUNICATION RISER DIAGRAM FOR ADDITION INFORMATION) THE CONTRACTOR SHALL COORDINATE WITH THE LOCAL DIRECTORATE OF INFORMATION MANAGEMENT (DOIM) REPRESENTATIVE LOCATED IN BUILDING #206 FOR THE INSTALLATION.

NOTE: ALL DIMENSIONS SHOWN ARE IN MILLIMETERS.

US Army Corps of Engineers
New York District

| Symbol | Description | Date | Appr. |
|---|---|---|---|

U.S. ARMY ENGINEER DISTRICT
CORPS OF ENGINEERS
NEW YORK, NEW YORK

Designed by: | Date: | Size: | Rev.:
Dwn by: | Ckd by: | Drawing file no.:
Reviewed by: | Drawing code:
Submitted by: | Plot date: 05-JAN-2006 16:29 | Plot by: eDenofa | Plot Scale: 0.5000000000000

File name: S:\Benson\military\Fort Hamilton\MPfac\Electrical\MPfac_T-106.dgn

PN 52224
MILITARY POLICE STATION
FORT HAMILTON, NY

COMMUNICATIONS SITE PLAN

Sheet reference number:
T-106

Submitted by: eDenofa
Plot Date: 05-JAN-2005 16:29
Saf:Nordcentlibrary:pwfort Hamilton:pwMPfac:Electrical:pwMPfac_T-106.dgn

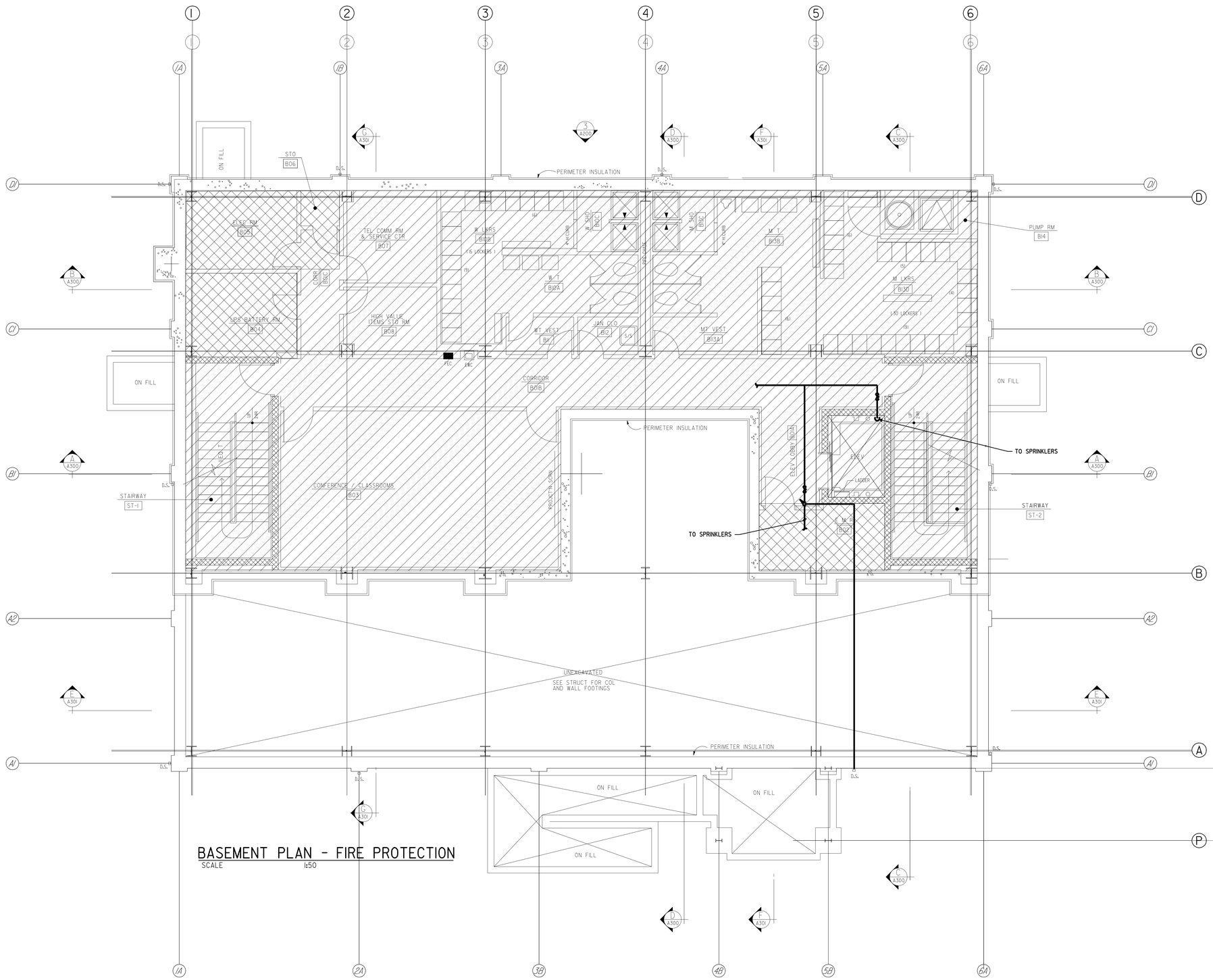


## BASEMENT PLAN - FIRE PROTECTION

SCALE 1:50

GRAPHIC SCALE

1000mm 0 1M 2M 3M 4M 5M

SCALE 1:50

TRUE NORTH PROJECT NORTH

NOTE: ALL DIMENSIONS SHOWN ARE IN MILLIMETERS UNLESS OTHERWISE NOTED.

US Army Corps of Engineers
New York District

| Symbol | Description | Date | Appr |
|---|---|---|---|

Designed by: | Date: | Size | Rev.
Dwn by: | Ckd by: | Drawing file no.:
Reviewed by: | Drawing code:
Submitted by: | Plot date: 05-JAN-2005 16:29 | Plot by: admin | Scale: 0.0125875:1.000000

File name: S:\Missions\Military\Fort Hamilton\Mfhq\Mechanical\Mfhq FP-100.dgn

US ARMY ENGINEER DISTRICT
CORPS OF ENGINEERS
NEW YORK, NEW YORK

PN. 10224
MILITARY POLICE STATION
FORT HAMILTON, NY

# BASEMENT FLOOR PLAN FIRE PROTECTION

Sheet reference number:

FP-100

Submitted by: eberdfwb
Surfaces: military.pref Hamilton@PS:\sdeconnect\sde@PS:\ FP-100.dgn
Plot Date: 05-JAN-2005 16:29

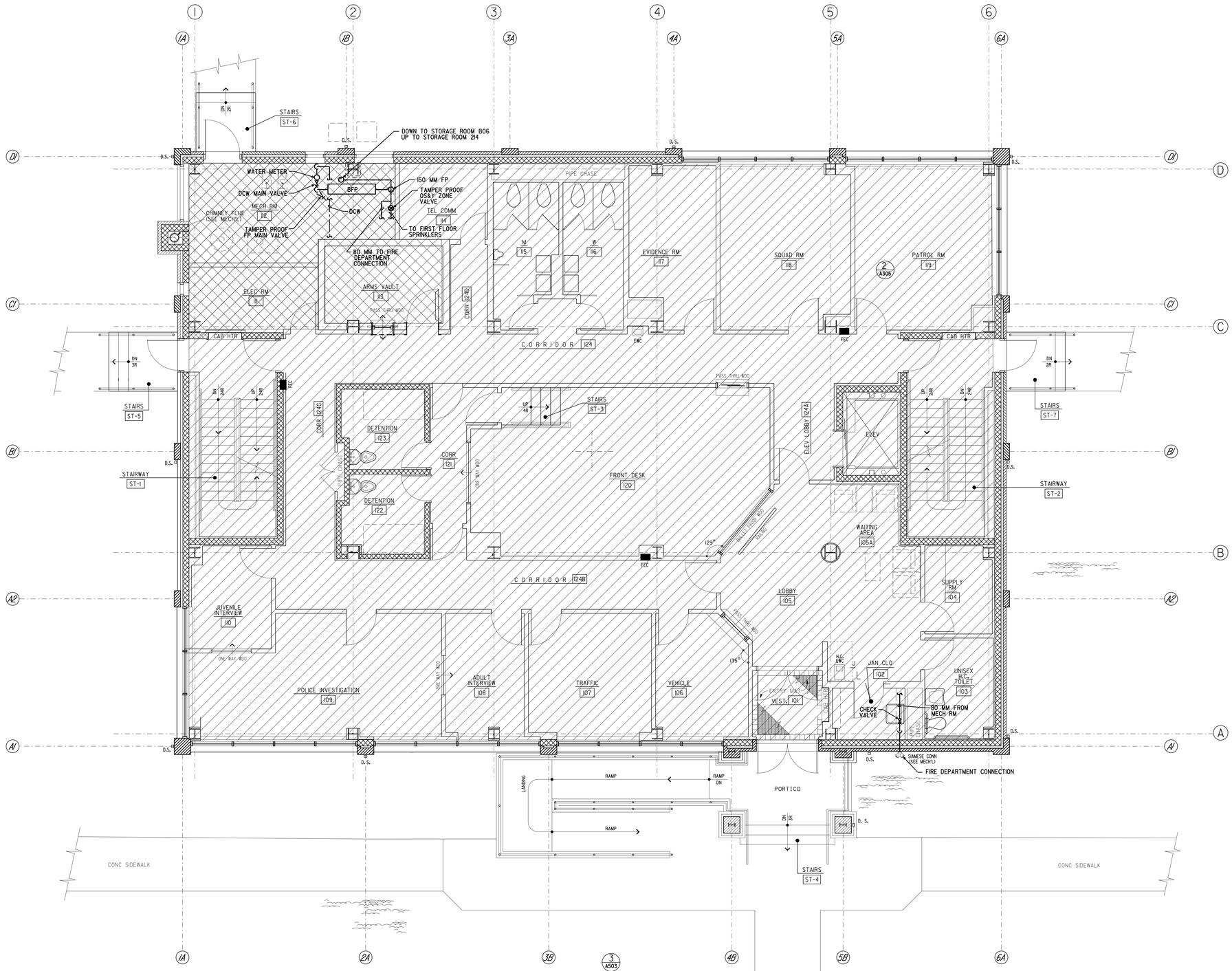


NOTE:
PROVIDE DRAIN LINE FROM BALL DRIP VALVE (ITEM #15) TOWARDS DOWNSPOUT.

## FIRST FLOOR PLAN - FIRE PROTECTION

SCALE 1:50

GRAPHIC SCALE

1000mm 0 1M 2M 3M 4M 5M

SCALE 1:50

TRUE NORTH PROJECT NORTH

NOTE: ALL DIMENSIONS SHOWN ARE IN MILLIMETERS UNLESS OTHERWISE NOTED.

US Army Corps of Engineers
New York District

| Symbol | Description | Date | Appr |
|---|---|---|---|

Designed by: | Date: | Size: | Rev:
Dwn by: | Ckd by: | Drawing file no.:
Reviewed by: | Drawing code:
Submitted by: | Plot date: 05-JAN-2005 16:29 | Plot scale: 1:1 | Scale: 0.0125875120000

File name: S:\Missions\Military\Fort Hamilton\MPs\Mechanical\MPfire 01-02.dgn

U.S. ARMY ENGINEER DISTRICT
CORPS OF ENGINEERS
NEW YORK, NEW YORK

PN 10224
MILITARY POLICE STATION
FORT HAMILTON, NY

# FIRST FLOOR PLAN FIRE PROTECTION

Sheet reference number:
FP-101

Submitted by: eberdfwb
Surface:\\earthlinkpdf1 \Hamilton\MPS\collection\collMPfire 01-02.dgn
Plot Date: 05-JAN-2005 16:29

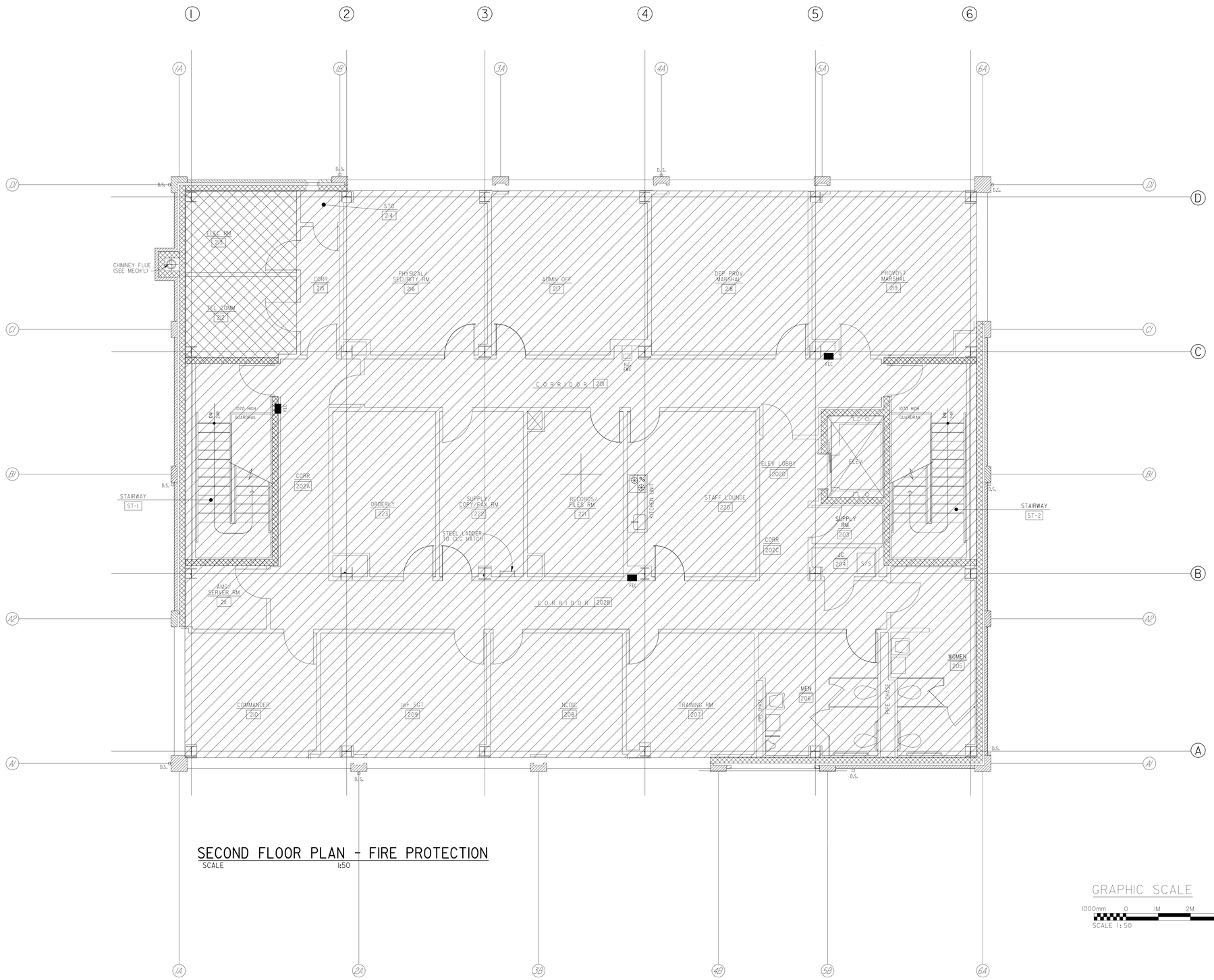


## SECOND FLOOR PLAN - FIRE PROTECTION

SCALE 1:50

GRAPHIC SCALE

1000mm 0 1M 2M 3M 4M 5M

SCALE 1:50

GRAPHIC SCALE

1000mm 0 1M 2M 3M 4M 5M

SCALE 1:50

TRUE NORTH PROJECT NORTH

NOTE: ALL DIMENSIONS SHOWN ARE IN MILLIMETERS UNLESS OTHERWISE NOTED.

US Army Corps of Engineers
New York District

| Rev | Date | Description |
|---|---|---|

©2002

U.S. ARMY ENGINEER DISTRICT
CORPS OF ENGINEERS
NEW YORK, NEW YORK

Designed by: | Date: | Size | Rev.
Dwn by: | Ckd by: | Drawing file no:
Reviewed by: | Drawing code:
Submitted by: | Plot date: 05-JAN-2005 16:30 | Plot by: eJenofleb | Scale: 8X-FP-0FP-1-100000
File name: S:\Recovery\Military\Fort Hamilton\Mechanical\Units 1F-1G.dgn

Pk. 52224
MILITARY POLICE STATION
FORT HAMILTON, NY

# SECOND FLOOR PLAN FIRE PROTECTION

Sheet reference number:
FP-102

Submitted by: eJenofleb
Sylvia-contentlog project hamilton\wp\fp\fp-fp-102.dgn
Plot Date: 05-JAN-2005 16:30

## WET TYPE SPRINKLER SYSTEM ZONE - WATER DEMAND SCHEDULE

| ZONE | SYMBOL | ROOMS IN ZONE | OCCUPANCY | DESIGN PARAMETERS | | | REMARKS |
|---|---|---|---|---|---|---|---|
| | | | | DESIGN DENSITY (L/min/SM) | DESIGN AREA (SM) | HOSE DEMAND (L/MIN) | |
| 1 | | BASEMENT | LIGHT | 4.0 | 280 | 950 | SEE NOTES 1-7 |
| 2 | | FIRST FLOOR | LIGHT | 4.0 | 280 | 950 | |
| 3 | | SECOND FLOOR | LIGHT | 4.0 | 280 | 950 | |
| 4 | | ELECTRICAL MECHANICAL EQUIPMENT ROOMS | ORDINARY GROUP 2 | 8.0 | 280 | 1900 | |

NOTES:

1. MILITARY POLICE STATION 'S BASEMENT, FIRST FLOOR AND SECOND FLOOR SHALL HAVE 100% COVERAGE BY A WET PIPE AUTOMATIC SPRINKLER SYSTEM.
2. THE SPRINKLER SYSTEMS SHALL BE HYDRAULICALY DESIGNED BY A FIRE PROTECTION/SPRINKLER SYSTEM CONTRACTOR.
3. THE SYSTEM SHALL BE DESIGNED FOR AN AVAILABLE WATER SUPPLY OF 112 LITERS PER SECOND AT A RESIDUAL PRESSURE OF 393 KILOPASCAL AND STATIC PRESSURE OF 538 KILOPASCAL.
4. FOR FIRE PROTECTION DETAIL, SEE INFORMATION ON THIS SHEET.
5. PROVIDE A SET OF OS & Y TAMPER-PROOF VALVES AND FLOW SWITCHES FOR EACH SPRINKLER RISER SYSTEM.
6. LIGHT HAZARD OCCUPANCY CLASSIFICATION ( SYMBOL ) SHALL BE PROVIDED FOR THE CLASSROOMS, OFFICES, DETENTION ROOMS.
7. ORDINARY HAZARD GROUP 2 OCCUPANCY CLASSIFICATION ( SYMBOL ) SHALL BE PROVIDED FOR THE ELECTRICAL ROOMS, MECHANICAL EQUIPMENT ROOMS AND THE ELEVATOR MACHINE ROOM. ORDINARY HAZARD GROUP 2 DESIGN PARAMETERS SHALL BE 8 L/MIN/SM, 280 SM AND 1900 L/MIN.

## FIRE PROTECTION SPRINKLER SYSTEM NOTES:

1. A WET-PIPE HYDRAULICALLY DESIGNED SPRINKLER SYSTEM SHALL BE DESIGNED AND INSTALLED TO PROVIDE SPRINKLER PROTECTION FOR AREAS SHOWN AS PER NFPA-13 AS APPLICABLE. THE SPRINKLER SYSTEM SHALL BE DESIGNED TO MEET THE DESIGN PARAMETERS AND THE DEMANDS INDICATED IN THE SPRINKLER SYSTEM ZONE - WET TYPE WATER DEMAND SCHEDULE AS SHOWN ON THIS SHEET.

2. SEISMIC PROTECTION SHALL BE PROVIDED FOR ALL FIRE PROTECTION PIPING. ALL DETAILS OF SEISMIC BRACING INSTALLED ON FIRE PROTECTION SHALL BE IN ACCORDANCE WITH NFPA-13. FOUR-WAY BRACING SHALL BE PROVIDED AT THE TOPS OF ALL RISERS. TWO-WAY BRACING SHALL BE PROVIDED FOR ALL FEEDERS AND CROSS MAINS AT 12 METERS CENTERS FOR LATERAL SWAY BRACING AND AT 24 METERS CENTERS FOR LONGITUDINAL SWAY BRACING. SWAY BRACING IS NOT REQUIRED FOR BRANCH LINES EXCEPT AT THE END OF EACH LINE OVER 2 METERS IN LENGTH. THE SEISMIC MAPS SHOWN IN FIGURE A-3-5, 3.1 OF NFPA-13 IS NOT APPLICABLE.

3. FOR HYDRANT FLOW TEST INFORMATION SEE PARAGRAPH 1.2.1.2 IN SPECIFICATION SECTION 13930A.

4. ALL SPRINKLER PIPING SHALL BE PITCHED FOR DRAINAGE OF THE SYSTEMS. PROVIDE AND INSTALL TAMPER PROOF DRAIN VALVES AND WASTE LINES FOR ALL SPRINKLERS AS REQUIRED BY CODE. END WASTE LINES OVER NEAREST FLOOR DRAIN.

5. PIPE SIZES SHOWN ON THE DRAWINGS ARE FOR ESTIMATE FOR BIDDING PURPOSE ONLY. THE SYSTEM SHALL CONFORM TO THE LATEST REQUIREMENTS OF NFPA-13 AS APPLICABLE.

6. FIRE DEPARTMENT CONNECTION AND INSPECTOR TEST CONNECTION SHALL BE AS PER NFPA 13.

7. PROVIDE A HEAT DETECTOR FOR THE ELEVATOR MACHINE ROOM.

8. PROVIDE SIDEWALL SPRINKLERS WITH SPRINKLER GUARDS FOR THE ELEVATOR PIT. MAXIMUM HEIGHT OF SPRINKLER SHALL BE 610 MM ABOVE PIT FLOOR.

9. PROVIDE A TAMPER-PROOF SUPERVISED SHUT-OFF VALVE IN THE SPRINKLER LINE SUPPLYING THE ELEVATOR PIT. ACTUATION OF THE PIT SPRINKLER SHALL NOT DISCONNECT POWER TO THE ELEVATOR.

10. PROVIDE PENDANT SPRINKLERS WITH SPRINKLER GUARDS FOR THE ELEVATOR MACHINE ROOM B02.

11. PROVIDE A TAMPER-PROOF SUPERVISED SHUT-OFF VALVE, CHECK VALVE, FLOW AND TEST VALVE IN THE SPRINKLER LINE SUPPLYING THE ELEVATOR MACHINE ROOM. ACTUATION OF THE FLOW SWITCH SHALL DISCONNECT POWER TO THE ELEVATOR. ELEVATOR SHALL PROCEED TO THE DISCHARGE FLOOR.

12. DRAIN TEST VALVE SERVING THE ELEVATOR MACHINE ROOM TO DOWN SPOUT.

13. FIRE PROTECTION CONTRACTOR SHALL NOT LOCATE SPRINKLER AT THE TOP OF THE HOISTWAY.

14. THE CONTRACTOR SHALL BE RESPONSIBLE FOR THE DESIGN (BY HYDRAULIC CALCULATIONS), INSTALLATION, COORDINATION AND POWER HOOK-UP WITH EMERGENCY POWER SUPPLY OF ALL EQUIPMENT ASSOCIATED WITH THE FIRE PROTECTION SYSTEM.

15. THE CONTRACTOR SHALL MAKE ALL NECESSARY PROVISIONS TO SUPPLY THE REQUIRED WATER PRESSURE. THIS SHALL INCLUDE BUT NOT BE LIMITED TO SENSORS, VALVES, FITTINGS, CONTROL PANEL, PANEL WIRING/HOOK-UP AND INTERFACING.

16. ALL FIRE DEPARTMENT CONNECTIONS SHALL BE PROPERLY MARKED WITH A SIGN INDICATING ITS PURPOSE AND SHALL BE MAINTAINED IN A MANNER AND LOCATION SATISFACTORY TO THE FIRE OFFICIAL. A METAL SIGN WITH RAISED LETTERS AT LEAST 25 MM IN SIZE SHALL BE MOUNTED ON ALL FIRE DEPARTMENT CONNECTIONS SERVING FIRE SPRINKLERS. SUCH SIGNS SHALL READ "AUTOMATIC SPRINKLERS/TEST CONNECTIONS".

17. SPRINKLER SYSTEM SUBMITTALS SHALL BE REVIEWED BY THE FIRE MARSHALL / FIRE DEPARTMENT. FINAL TEST AND CERTIFICATION SHALL BE PERFORMED IN THE PERSENCE OF THE FIRE MARSHALL / FIRE DEPARTMENT REPRESENTATIVE AND APPROVED BY THE AUTHORITY HAVING JURISDICTION.

18. TYPES OF HANGERS AND INSTALLATION METHODS SHALL BE IN ACCORDANCE WITH THE LATEST REQUIREMENTS OF NFPA-13.

19. BACKFLOW PREVENTERS SHALL BE INSTALLED AS SHOWN, COMPLY WITH LOCAL CODE REQUIREMENTS AND MEET MANUFACTURER RECOMMENDATIONS.

20. UNDERGROUND PIPING SHALL BE INSTALLED AND TESTED PER NFPA-24.

21. INSTALL APPROVED TYPES OF SPRINKLER HEADS ACCORDING TO NFPA-13 AND MANUFACTURER REQUIREMENTS.

22. MATERIAL AND EQUIPMENT SHALL COMPLY WITH THE "BUY AMERICAN ACT".

23. ELECTRICIAL EQUIPMENT ROOMS (TELECOM, TELEPHONE, ETC.) SHALL ADHERE TO THE NATIONAL ELECTRIC CODE.

24. AREAS TO BE SPRINKLERED: LIGHT HAZARD; ORDINARY HAZARD GROUP 2

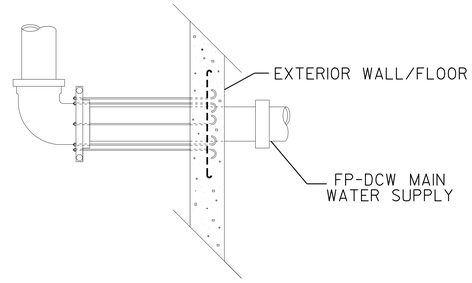


THRUST CONTROL DETAIL
NTS

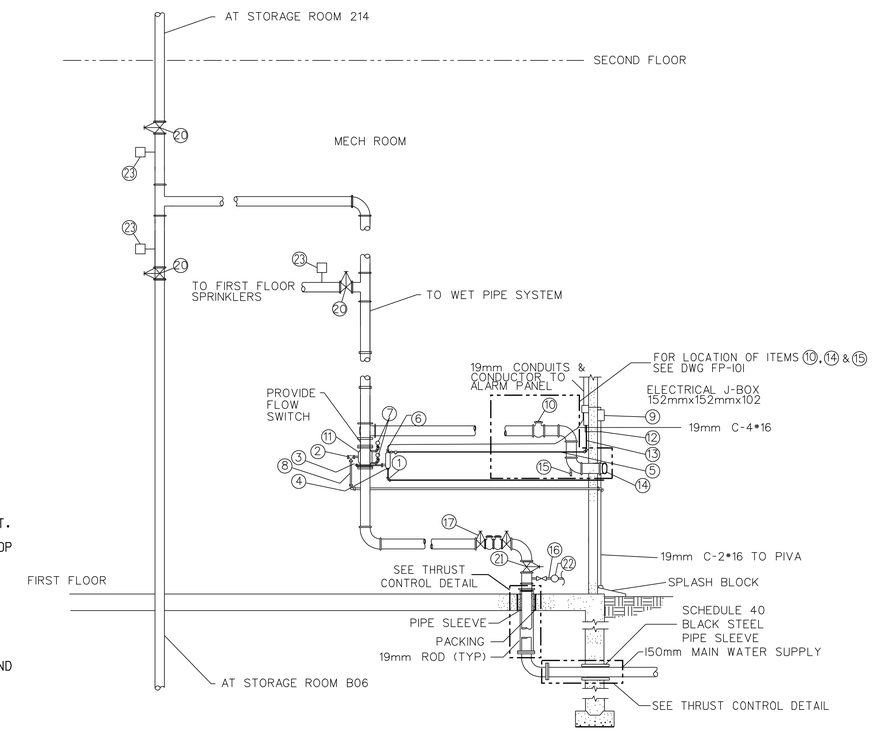


TYPICAL FIRE RISER DETAIL
NTS

| ITEM NO. | DESCRIPTION |
|---|---|
| 1 | RETARDING CHAMBER DRAIN |
| 2 | MAIN DRAIN VALVE |
| 3 | ALARM TEST VALVE |
| 4 | RETARDING CHAMBER |
| 5 | ALARM LINE STRAINER |
| 6 | SUBSTITUTE PRESS SWITCH WITH FLOW SWITCH |
| 7 | WATER PRESSURE GAUGE |
| 8 | MAIN DRAIN |
| 9 | WATER MOTOR ALARM |
| 10 | CHECK VALVE |
| 11 | WET PIPE ALARM/CHECK VALVE |
| 12 | WATER MOTOR GONG DRAIN |
| 13 | WATER MOTOR ALARM LINE |
| 14 | FIRE DEPARTMENT CONNECTION |
| 15 | RAIL DRIP |
| 16 | DOMESTIC WATER CONNECTION |
| 17 | DOUBLE CHECK VALVE BACKFLOW PREVENTER |
| 18 | ZONE VALVE |
| 19 | NOT USED |
| 20 | TAMPER-PROOF OS&Y ZONE VALVE |
| 21 | TAMPER-PROOF MAIN VALVE |
| 22 | DOMESTIC WATER METER |
| 23 | FLOW SWITCH |

NOTE: ALL DIMENSIONS SHOWN ARE IN MILLIMETERS UNLESS OTHERWISE NOTED.

US Army Corps of Engineers
New York District

| Rev. | Date | Description | Appr. |
|---|---|---|---|

©2002

Designed by: | Date: | Sctr. Rev.
Dwn by: | Ckd by: | Drawing file no.:
Reviewed by: | Drawing code:
Submitted by: | Plot date: 05-JAN-2005 16:30 Plot by: eXtendFab Scale: 0.000000:1.000000
File name: S:\Resources\Military\Fort Hamilton\DPW\Mechanical\FP\fp_fire 600.dgn

U.S. ARMY ENGINEER DISTRICT
CONTRACT NO. DACA51-
NEW YORK, NEW YORK

Pr. 32224
MILITARY POLICE STATION
FORT HAMILTON, NY

RISER, NOTES & SCHEDULE

Sheet reference number:
FP-600

Submitted by: eXtendFab
Software:eXtendfab Version:plot Workflow:eXtendfab Plot Date:05-JAN-2005 16:30

# MECHANICAL DRAWING ABBREVIATIONS AND SYMBOLS (HVAC)

## ABBREVIATIONS

### A
ADDIT ADDITIVE
AC AIR CONDITIONING
ACS AUTOMATIC CONTROL SYSTEM
ACU AIR CONDITIONING UNIT
AD ACCESS DOOR
AF AIR FILTER
AFF ABOVE FINISHED FLOOR
AHU AIR HANDLING UNIT
AL ACOUSTIC LINING
ALUM ALUMINUM
AMCS AUTOMATED MONITORING CONTROL SYSTEM
AP ACCESS PANEL
ACC SEC ACCESS SECTION
ATC AUTOMATIC TEMPERATURE CONTROL
AS AIR SEPARATOR
AS ACOUSTICAL SILENSER
AV AUTOMATIC VENT
APD AIR PRESSURE DIFFERENTIAL

### B
BX-1 VAV BOX (UNIT NO.1)
BG BOTTOM GRILLE
BHP BRAKE HORSEPOWER
BR BOTTOM REGISTER
BT BOTTOM THROAT
BTU BRITISH THERMAL UNIT
BTUH BRITISH THERMAL UNIT/HOUR
BDD BACK DRAFT DAMPER
B-1 BOILER NO.1

### C
C CELISUS
CC-1 COOLING COIL No. 1
CD CEILING DIFFUSER
CLD CEILING LINEAR DIFFUSER
CLR CEILING LINEAR REGISTER
CG CEILING GRILLE
CH-1 CHILLER NO. 1
CHWP CHILLED WATER PUMP
CHWR CHILLED WATER RETURN
CHWS CHILLED WATER SUPPLY
CS CIRCUIT SETTER
CLG CEILING
CMS CUBIC METERS PER SECOND
COMPR COMPRESSOR
COND CONDENSATE
CONN CONNECT, CONNECTION
CONV CONVERTER
CPA CONTROL POINT ADJUST
CP CIRCULATING PUMP
CR CEILING REGISTER
CU COPPER
CU FT CUBIC FEET
CU IN CUBIC INCHES
CUH-1 CABINET UNIT HEATER (UNIT NO.1)
CU-1 CONDENSING UNIT (UNIT NO.1)
CWP CONDENSER WATER PUMP
CAP CAPACITY
CENT. CENTRIFUGAL
CF CHEMICAL FEEDER
CV-A CONVECTOR TYPE A
CW COLD WATER
CRU-1 CONDENSATE RETURN UNIT (NO.1)
CHWS CHILLED HOT WATER SUPPLY
CHWR CHILLED HOT WATER RETURN
CHWRR CHILLED HOT WATER REVERSE RETURN
CWS CHILLED WATER SUPPLY
CWR CHILLED WATER RETURN

### D
D DROP , DAMPER
DB DRY BULB
DHU DEHUMIDIFIER
DHW DOMESTIC HOT WATER
DIAM DIAMETER
DN DOWN
DPC DIFFERENTIAL PRESSURE CONTROLLER
DWG DRAWING
DX DIRECT EXPANSION
DXC-1 DIRECT EXPANSION COIL No. 1
DMPR DAMPER

### E
EA EACH
EAC ELECTRIC AIR CLEANER
EAT ENTERING AIR TEMPERATURE
EDB ENTERING DRY BULB TEMPERATURE
EDR EQUIVALENT DIRECT RADIATION
EF EXHAUST FAN
EL ELEVATION
ELEC ELECTRIC
ENT ENTERING
ET EXPANSION TANK

### E
EQ EQUAL
EUH ELECTRIC UNIT HEATER
EWB ENTERING WET BULB
EWT ENTERING WATER TEMPERATURE
EXH EXHAUST
EXP EXPANSION
E.J. EXPANSION JOINT

### F
F FILTER
F&T FLOAT AND THERMOSTATIC
FA FREE AREA (SQ FT)
FC FLEXIBLE CONNECTION
FCU FAN COIL UNIT
FD FIRE DAMPER
FF FINAL FILTER
FG FINISHED GRADE
FIN FL FINISHED FLOOR
FND FOUNDATION DRAIN
FEC FIRE EXTINGUISHER CABINET
FOT FUEL OIL TANK
FPI FINS PER INCH
FPM FEET PER MINUTE
FT FEET
FT-1 FIN TUBE RADIATION (TYPE FT-1)
FTR FINNED TUBE RADIATION
FV FACE VELOCITY
FMS FLOW MEASURING STATION
FO FUEL OIL

### G
GA GROSS AREA
GAL GALLON
GMT GLYCOL MAKEUP TANK
GPH GALLON PER HOUR
GPM GAL. PER MINUTE
GX GENERAL EXHAUST
GFE GOVERNMENT FURNISHED EQUIPMENT
GR HOT WATER/40% GLYCOL RETURN
GS HOT WATER/40% GLYCOL SUPPLY
GSP GLYCOL SOLUTION PUMP

### H
H HEIGHT
HC-1 HEATING COIL No. 1
HC EWC HANDICAP ELECTRIC WATER COOLER
HD HEAVY DUTY
HOA HAND/OFF/AUTO
HP HORSEPOWER
HR HOUR
HRC HEAT RECOVERY COIL
HS HIGH SPEED
HTG HEATING
HTP HEAT EXCHANGER PACKAGE
HTHWR HIGH-TEMP/HOT WATER RETURN
HTHWS HIGH-TEMP/HOT WATER SUPPLY
HUM HUMIDIFIER
HWP HOT WATER PUMP
HV HEATING AND VENTILATING
HX HEAT EXCHANGER
HZ HERTZ
H STAT HUMIDISTAT
HWS HOT WATER SUPPLY (HEATING)
HWR HOT WATER RETURN (HEATING)

### I
ID INSIDE DIAMETER
IN INCH OR INCHES
IPS IRON PIPE SIZE

### K
KW KILOWATT
KH-1 KITCHEN HOOD NO.1
KG/MM2 KILOGRAMS PER MILLIMETERS SQUARED

### L
L LITERS
LAT LEAVING AIR TEMPERATURE
LBS POUNDS
LCP LOCAL CONTROL PANEL
LCV LEVEL CONTROL VALVE
LD LINEAR DIFFUSER
LDB LEAVING DRY BULB TEMPERATURE
LIN FT LINEAR FEET
LPH LITERS PER HOUR
LS LOW SPEED
L/S LITERS PER SECOND
LVG LEAVING
LWB LEAVING WET BULB TEMPERATURE
LWT LEAVING WATER TEMPERATURE

### M
M METER
M/S METERS PER SECOND
MAU MAKE-UP AIR UNIT
MAX MAXIMUM
MBH THOUSAND BTU PER HOUR
MCC MOTOR CONTROL CENTER
MD MOTORIZED DAMPER
MER MECHANICAL EQUIPMENT ROOM
MHP MOTOR HORSEPOWER
MIM MINIMUM
MOT MOTOR
MTG MOUNTING
MXB MIXING BOX
MUW MAKE UP WATER
MM MILLIMETER

### N
NC NORMALLY CLOSED
NIC NOT IN CONTRACT
NO NORMALLY OPEN
NPSH NET POSITIVE SUCTION HEAD
NTS NOT TO SCALE

### O
OA OUTSIDE AIR
OAI OUTSIDE AIR INTAKE
OD OUTSIDE DIAMETER
OV OUTLET VELOCITY
OPER OPERATOR, OPERATING
OPNG OPENING

### P
P-1 PUMP NO. 1
Pa PASCALS
PD PRESSURE DROP
PF PREFILTER
PG PRESSURE GAUGE
PHC PREHEAT COIL
PRV PRESSURE REDUCING VALVE
PSI POUNDS PER SQUARE INCH
PSIA PSI ASSOLUTE
PSIG PSI GAUGE
PVC POLYVINYL CHLORIDE
PH PHASE
PRESS PRESSURE

### R
R RISE
RA RETURN AIR
RAD RADIATION
REL AIR RELIEF AIR
REFR REFRIGERANT
RF RETURN FAN
RH RELATIVE HUMIDITY
RHC REHEAT COIL
RM ROOM
ROH RELIEF/OUTLET HOOD
ROT ROTATION
RPF ROLL PREFILTER
RPS REVOLUTIONS PER SECOND
RR RETURN REGISTER
RECVR. RECEIVER
RHWS RADIANT HOT WATER SUPPLY
RHWR RADIANT HOT WATER RETURN
RHWRR RADIANT HOT WATER REVERSE RETURN

### S
SA SUPPLY AIR
SC SPOT COOLER
SEP SEWER EJECTOR PUMP
SF SUPPLY FAN
SP STATIC PRESSURE
SPS STATIC PRESSURE SENSOR
SPEC SPECIFICATION
STGS STAGES
SS STAINLESS STEEL
SUCT SUCTION
SMK D. SMOKE DAMPER
SMK/FD COMBINATION SMOKE & FIRE DAMPER

### T
T THROAT
TA THROW AWAY
TA TRANSFER AIR
TDH TOTAL DYNAMIC HEAD
TEMP TEMPERATURE
TF TERMINAL FILTER
TC-1 TEMPERING COIL NO. 1
TG TRANSFER GRILL
TG TOP GRILLE
TR TOP REGISTER
TRF TRANSFER FAN
TRG TRANSFER GRILLE
TS TIP SPEED
Ⓣ STAT THERMOSTAT
TT TOP THROAT
TV TURNING VANES
TYP TYPICAL
TX TOILET EXHAUST
TC TEMPERATURE CONTROL SENSOR
ⓉⒸ TEMPERATURE CONTROLLER
[T] TEMPERATURE INDICATION

### U
UH-1 UNIT HEATER (TYPE UH-1)

### V
V VOLTS
VAV VARIABLE AIR VOLUME
VIV VARIABLE INLET VANES
VD VOLUME DAMPER
VI VIBRATION ISOLATORS

### W
W WATTS
W/ WITH
W/O WITHOUT
WB WET BULB
WC WATER COLUMN
WG WATER GAUGE
WMS WIRE MESH SCREEN
WP WORKING PRESSURE, WEATHER PROOF
WPD WATER PRESSURE DROP
WSP WORKING STEAM PRESSURE
WT WEIGHT

## SYMBOLS

| SYMBOL | DESCRIPTION |
|---|---|
| | SUPPLY DUCT UP |
| | SUPPLY DUCT DOWN |
| | EXHAUST OR RETURN DUCT UP |
| | EXHAUST OR RETURN DUCT DOWN |
| | FLEXIBLE CONNECTOR |
| | SUPPLY AIR REGISTER (ARROW INDICATE TYPE 2-WAY, 3-WAY OR 4-WAY) |
| | CEILING AIR DIFFUSER (4-WAY) THROW UNLESS OTHERWISE NOTED) |
| | RETURN AIR REGISTER |
| | TURNING VANES |
| MD | MOTORIZED DAMPER |
| FD | FIRE DAMPER |
| VD | VOLUME DAMPER |
| | AUTOMATIC VENT |
| | MANUAL VENT |
| | DIRECTION OF FLOW |
| PRV | PRESSURE REDUCING VALVE |
| | GATE VALVE |
| | GLOBE VALVE |
| | IN-LINE STRAINER W/GATE VALVE & CAPPED PIPE |
| | IN-LINE STRAINER |
| | CIRCUIT SETTER |
| | CONTROL VALVE (2-WAY) |
| | CONTROL VALVE (3-WAY), CHANGE-OVER VALVE |
| | RELIEF VALVE |
| PDC | PRESSURE DIFFERENTIAL CONTROLLER |
| | TEMP & PRESS RELIEF VALVE |
| P | PRESSURE GAUGE WITH COCK |
| | BALANCING COCK |
| | FLEXIBLE PIPE CONNECTION |
| | REDUCER (ECCENTRIC), FLAT ON TOP |
| | CONCENTRIC REDUCER/INCREASER |
| | COMBINATION BALANCING & SHUT OFF VALVE |
| | PIPE GUIDE |
| | ANCHOR |
| | UNION |
| | UNDERCUT DOOR |
| | LOUVER DOOR |

| SYMBOL | DESCRIPTION |
|---|---|
| | EXPANSION JOINT |
| | POINT OF CONNECTION |
| Ⓗ | HUMIDISTAT |
| Ⓣ | THERMOSTAT |
| [T] | TEMPERATURE INDICATOR |
| [R] | TEMPERATURE RESET INTERFACE |
| ⓉⒸ | TEMPERAURE CONTROLLER |
| | ACOUSTICALLY LINED DUCT |
| | LINEAR SLOT DIFFUSER |
| | IN-LINE PUMP |
| | UNIT HEATER |
| — CHWS — | CHILLED WATER SUPPLY |
| — CHWR — | CHILLED WATER RETURN |
| — COND — | CONDENSATE |
| — HWS — | HOT WATER SUPPLY |
| — HWR — | HOT WATER RETURN |
| — RLS — | REFRIGERANT LINE SUPPLY |
| — RLR — | REFRIGERANT LINE RETURN |

NOTE:
THIS IS A GENERAL LIST OF ABBREVIATIONS AND SYMBOLS. NOT ALL ENTRIES MAY APPLY TO THIS PROJECT.

US Army Corps of Engineers
New York District

U.S. ARMY ENGINEER DISTRICT
CORPS OF ENGINEERS
NEW YORK, NEW YORK

MILITARY POLICE STATION
FORT HAMILTON, NY

SYMBOLS & ABBREVIATIONS
HVAC

Sheet reference number:
M-001

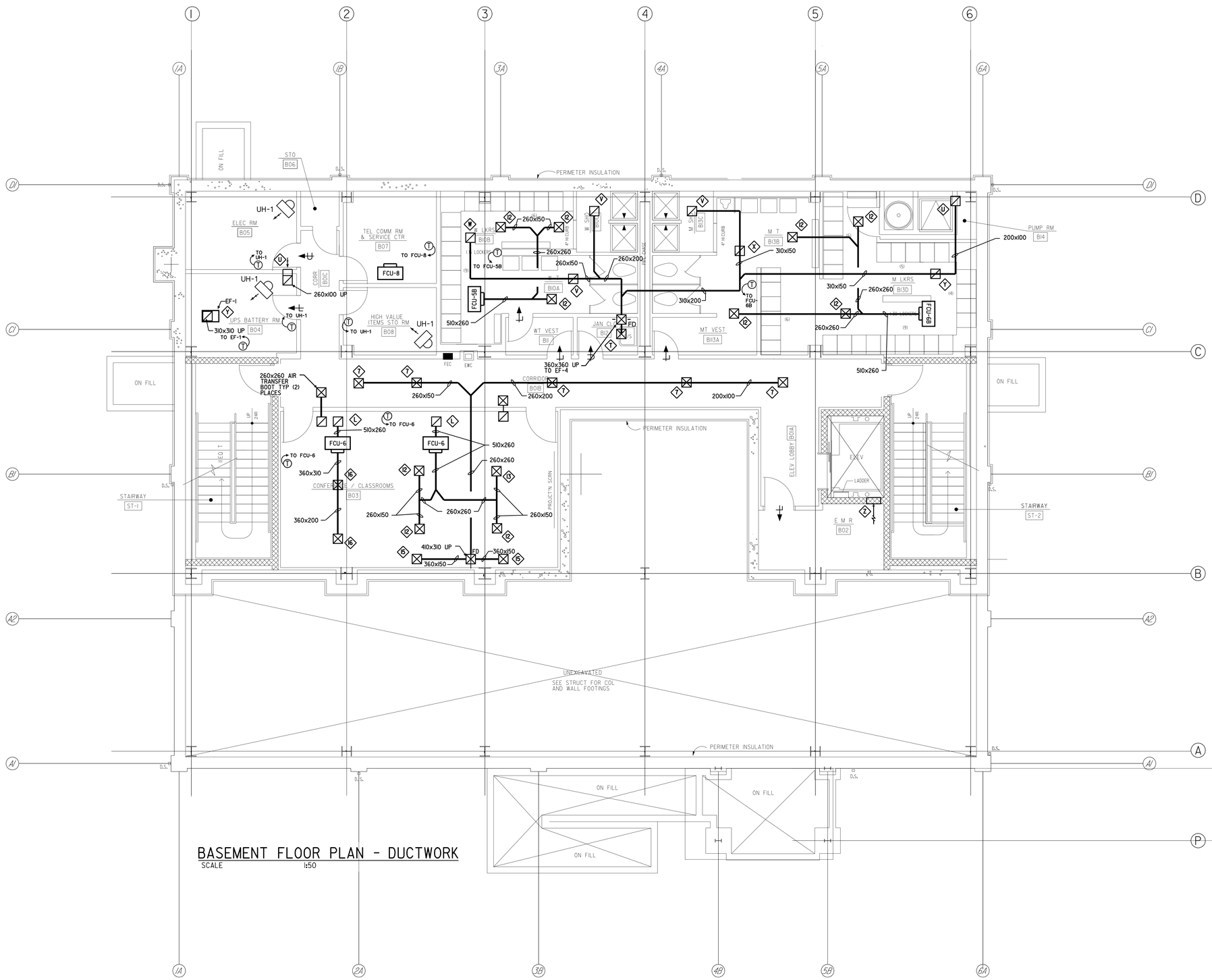


## BASEMENT FLOOR PLAN - DUCTWORK

SCALE 1:50

GRAPHIC SCALE

1000mm 0 1M 2M 3M 4M 5M

SCALE 1:50

TRUE NORTH PROJECT NORTH

NOTE: ALL DIMENSIONS SHOWN ARE IN MILLIMETERS UNLESS OTHERWISE NOTED.

US Army Corps of Engineers New York District

| Symbol | Description | Date | Appr |
|---|---|---|---|

| | | | |
|---|---|---|---|
| Designed by: | | Date: | Size: Rev: |
| Dwn by: | Ckd by: | Drawing file no.: | |
| Reviewed by: | | Drawing code: | |
| Submitted by: | | Plot date: 05-JAN-2005 16:30<br>Plot by: eSenaFwb<br>Scale: 00-FP0978-T100000 | |

File name: E:\Revcom\military\fort hamilton\MPS\Mechanical\Ums 1& 100.dgn

U.S. ARMY ENGINEER DISTRICT
CONTRACT NO. W912DS-05-B-0003
NEW YORK, NEW YORK

PN 92224
MILITARY PUBLIC SERVICE STATION
FORT HAMILTON, NY

# BASEMENT FLOOR PLAN DUCTWORK

Sheet reference number:

M–100

Submitted by: eSenaFwb
Sorting criteria: prefix: hamilton\MPS\mechanical\pmp\ums 1& 100.dgn
Plot Date: 05-JAN-2005 16:30

NOTE:

1. LOCATION OF EF-3, EF-4 AND RELATED DUCTWORK SHALL BE ABOVE THE ARMS VAULT ROOM 113. DUCTWORK INSIDE THE ARMS ROOM IS PROHIBITED.
2. PROVIDE AN EMERGENCY SHUTOFF SWITCH FOR AHU-1,2.
3. LOCATION OF AHU-2 DUCTWORK SHALL BE ABOVE THE DETENTION CELL ROOMS 122 AND 123. DUCTWORK INSIDE THE DETENTION CELLS IS PROHIBITED.

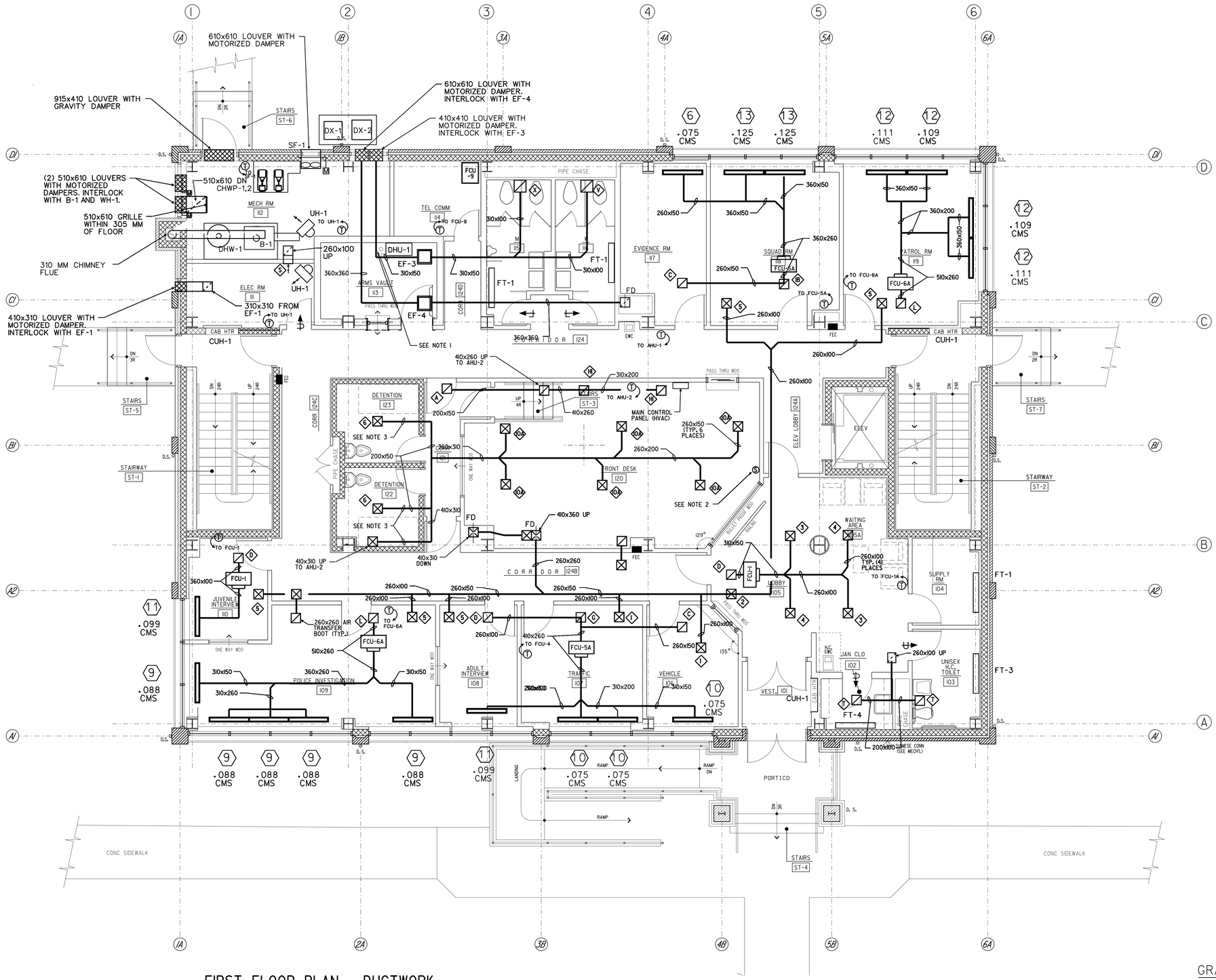


## FIRST FLOOR PLAN - DUCTWORK

SCALE 1:50

GRAPHIC SCALE

1000mm 0 1M 2M 3M 4M 5M

SCALE 1:50

TRUE NORTH PROJECT NORTH

NOTE: ALL DIMENSIONS SHOWN ARE IN MILLIMETERS UNLESS OTHERWISE NOTED.

US Army Corps of Engineers New York District

| Symbol | Description | Date | Appr |
|---|---|---|---|

| | | | |
|---|---|---|---|
| Designed by: | | Date: | Size: Rev: |
| Dwn by: | Ckd by: | Drawing file no.: | |
| Reviewed by: | | Drawing code: | |
| Submitted by: | | Plot date: 05-JAN-2005 16:30<br>Plot scale: 1:1<br>Size: 841x594 | |

U.S. ARMY ENGINEER DISTRICT
CORPS OF ENGINEERS
NEW YORK, NEW YORK

File name: S:\Division\Military\Fort Hamilton\UFRs\Mechanical\UFRs 14.00.dgn

PN 80224
MILITARY PUBLIC STATION
FORT HAMILTON, NY

# FIRST FLOOR PLAN DUCTWORK

Sheet reference number:

M-101

Submitted by: e3andrab
Sa1fter:ecomilitary:ef1 Hamilton:MPS:dataecomcad:dwgs:a 14.00.dgn
Plot Date: 05-JAN-2005 16:30

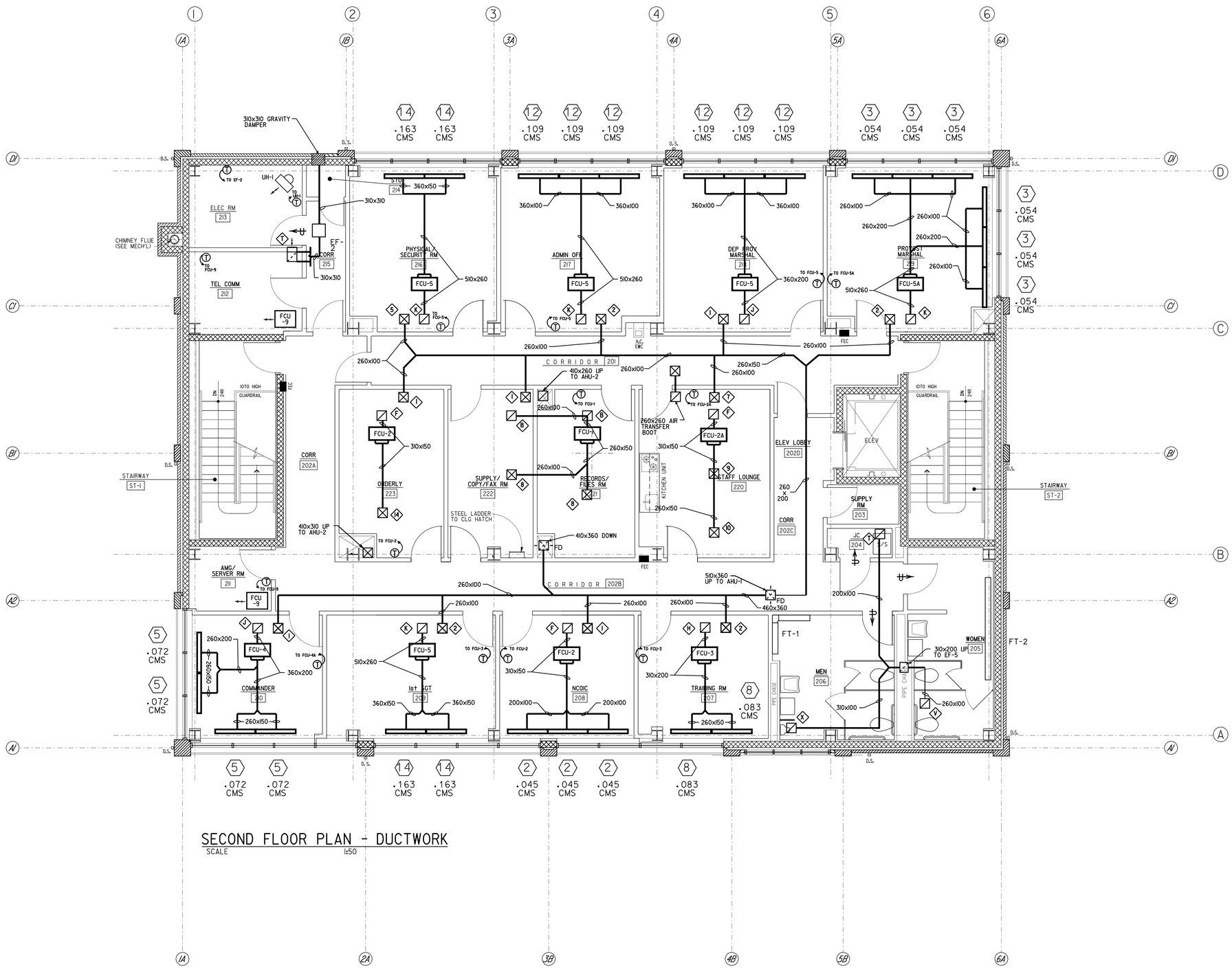


## SECOND FLOOR PLAN - DUCTWORK

SCALE 1:50

GRAPHIC SCALE

1000mm 0 1M 2M 3M 4M 5M

SCALE 1:50

TRUE NORTH PROJECT NORTH

NOTE: ALL DIMENSIONS SHOWN ARE IN MILLIMETERS UNLESS OTHERWISE NOTED.

US Army Corps of Engineers New York District

| Symbol | Description | Date | Appr |
|---|---|---|---|

Designed by: | Date: | Size: | Rev:
Dwn by: | Ckd by: | Drawing file no.:
Reviewed by: | Drawing code:
Submitted by: | Plot date: 05-JAN-2006 16:30 | Plot by: | Scale: SUFFIXES=100000

U.S. ARMY ENGINEER DISTRICT
NEW YORK, NEW YORK
NEW YORK, NEW YORK

File name: G:\Renovation\Military\Fort Hamilton\Mechanical\MFHs M-102.dgn

PN: 52224
MILITARY POLICE STATION
FORT HAMILTON, NY

SECOND FLOOR PLAN
DUCTWORK

Sheet reference number:
M-102

Submitted by: c3emdfeb
c:\office connection\projects\hamilton\mfh\hamilton\mfhs m-102.dgn
Plot Date: 05-JAN-2005 16:30

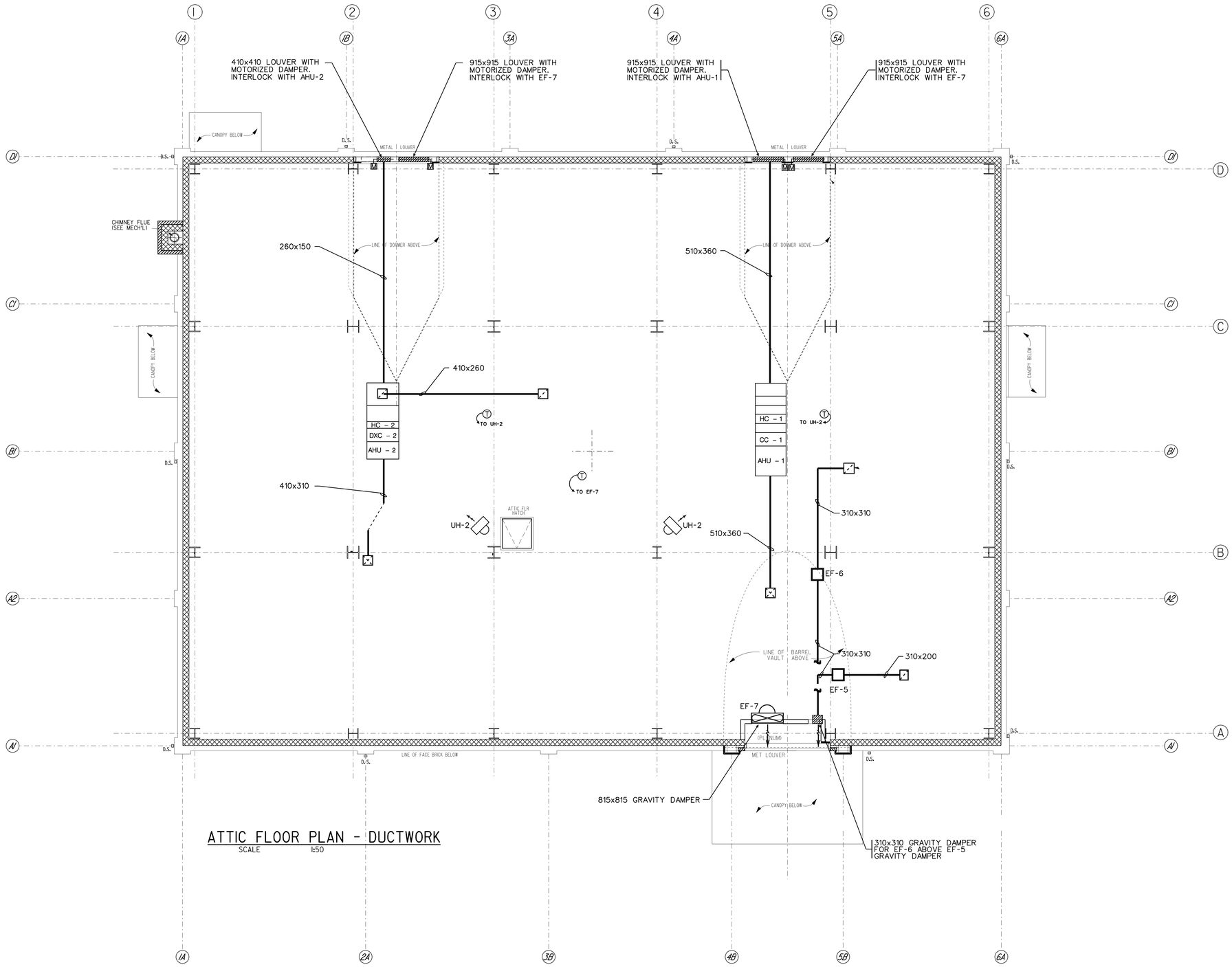


## ATTIC FLOOR PLAN - DUCTWORK

SCALE 1:50

GRAPHIC SCALE

1000mm 0 1M 2M 3M 4M 5M

SCALE 1:50

TRUE NORTH PROJECT NORTH

NOTE: ALL DIMENSIONS SHOWN ARE IN MILLIMETERS UNLESS OTHERWISE NOTED.

US Army Corps of Engineers New York District

| Rev | Date | Description | Appr |
|---|---|---|---|

©2002

Designed by: Date: Size: Rev:
Dwn by: Ckd by: Drawing file no.:
Reviewed by: Drawing code:
Submitted by: Plot date: 05-JAN-2005 16:30 Plot by: eJenofeb Scale: 0:0.0167:1.00000
File name: S:\Secure\military\Fort Hamilton\MPS\Mechanical\Ufr15a_M-103.dgn

U.S. ARMY ENGINEER DISTRICT CORPS OF ENGINEERS NEW YORK, NEW YORK

PN: 32224
MILITARY POLICE STATION
FORT HAMILTON, NY

ATTIC FLOOR PLAN DUCTWORK

Sheet reference number:
M-103

Submitted by: eJenofeb
Plot Date: 05-JAN-2005 16:30
Plot by: eJenofeb
Solution-Guidelines-plot-01 hamilton\MPS\Traffic\Secure\MPS\Ufr15a_M-103.dgn

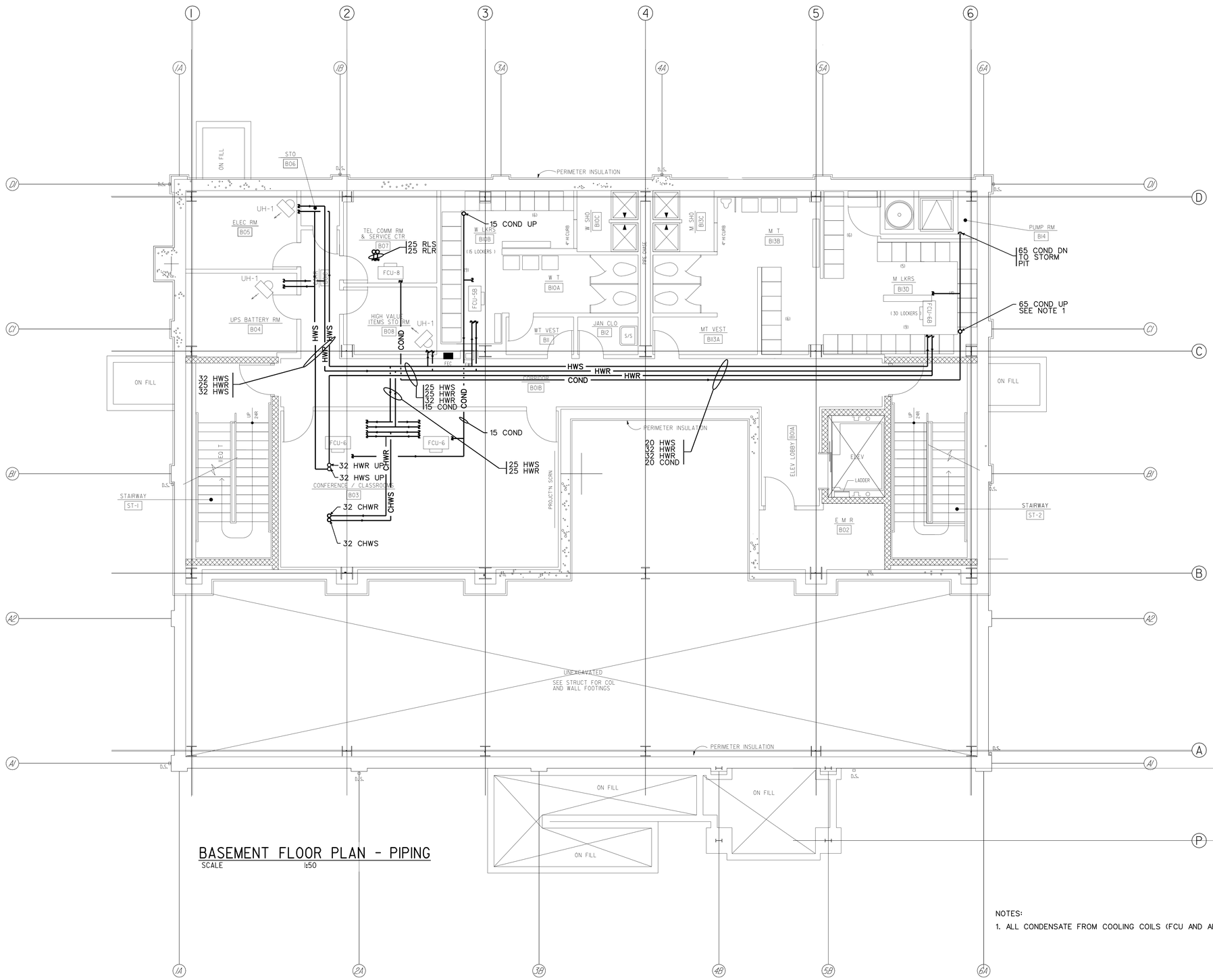


## BASEMENT FLOOR PLAN - PIPING

SCALE 1:50

NOTES:

1. ALL CONDENSATE FROM COOLING COILS (FCU AND AHU) SHALL BE PIPED AND DRAINED TOWARD 65 COND. LEADER.

GRAPHIC SCALE

1000mm 0 1M 2M 3M 4M 5M

SCALE 1:50

TRUE NORTH PROJECT NORTH

NOTE: ALL DIMENSIONS SHOWN ARE IN MILLIMETERS UNLESS OTHERWISE NOTED.

US Army Corps of Engineers New York District

| Symbol | Description | Date | Appr |
|---|---|---|---|

Designed by: | Date: | Size | Rev.
Dwn by: | Ckd by: | Drawing file no.:
Reviewed by: | Drawing code:
Submitted by: | Plot date: 05-JAN-2005 16:30 | Plot by: eJenofeb | Scale: 8U-FHDR1-100000

U.S. ARMY ENGINEER DISTRICT CORPS OF ENGINEERS NEW YORK, NEW YORK

File name: S:\Renovation\Army\Fort Hamilton\Military\Mechanical\Utility M-101.dgn

©2002

Ph. 32224
MILITARY POLICE STATION
FORT HAMILTON, NY

# BASEMENT FLOOR PLAN PIPING

Sheet reference number:

M-104

Submitted by: eJenofeb
Plot Date: 05-JAN-2005 16:30
Plot by: eJenofeb

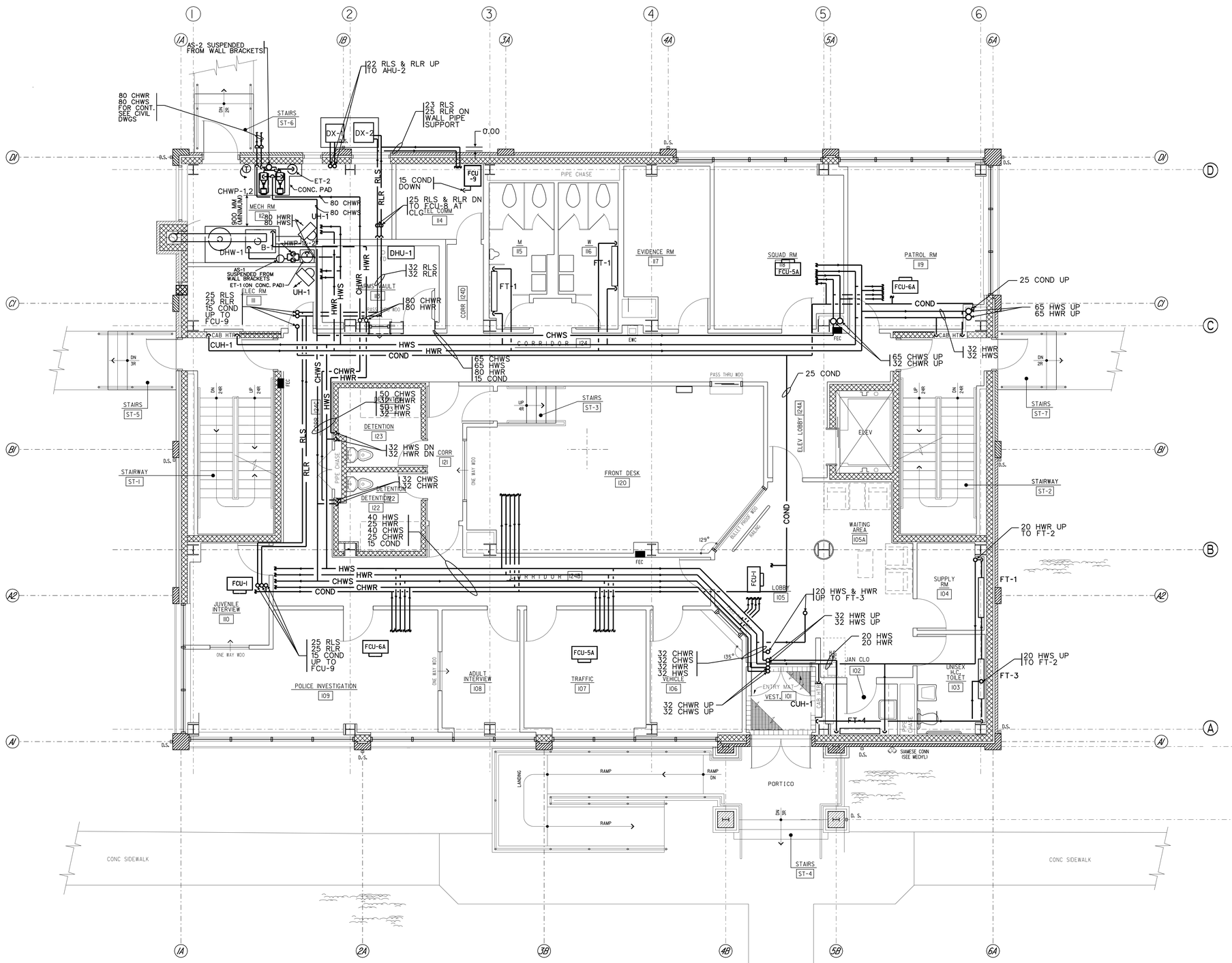


# FIRST FLOOR PLAN - PIPING

SCALE 1:50

GRAPHIC SCALE

1000mm 0 1M 2M 3M 4M 5M

SCALE 1:50

TRUE NORTH PROJECT NORTH

NOTE: ALL DIMENSIONS SHOWN ARE IN MILLIMETERS UNLESS OTHERWISE NOTED.

US Army Corps of Engineers New York District

| Symbol | Description | Date | Appr. |
|---|---|---|---|

Designed by: | Date: | Size: | Rev:
Dwn by: | Chd by: | Drawing file no.:
Reviewed by: | Drawing code:
Submitted by: | Plot date: 05-JAN-2005 16:30 | Plot by: eSendfeb | Scale: 8U-ENGR-01-00000

File name: S:\Secure\Military\Fort Hamilton\Mil\Pipe\Mechanical\Ultra_M-105.dgn

U.S. ARMY ENGINEER DISTRICT CORPS OF ENGINEERS NEW YORK, NEW YORK

Pn: 52224
MILITARY POLICE STATION
FORT HAMILTON, NY

# FIRST FLOOR PLAN PIPING

Sheet reference number:

M–105

Submitted by: eSendfeb
Plot Date: 05-JAN-2005 16:30
S:\Secure\Military\Fort Hamilton\Mil\Pipe\Mechanical\Ultra_M-105.dgn

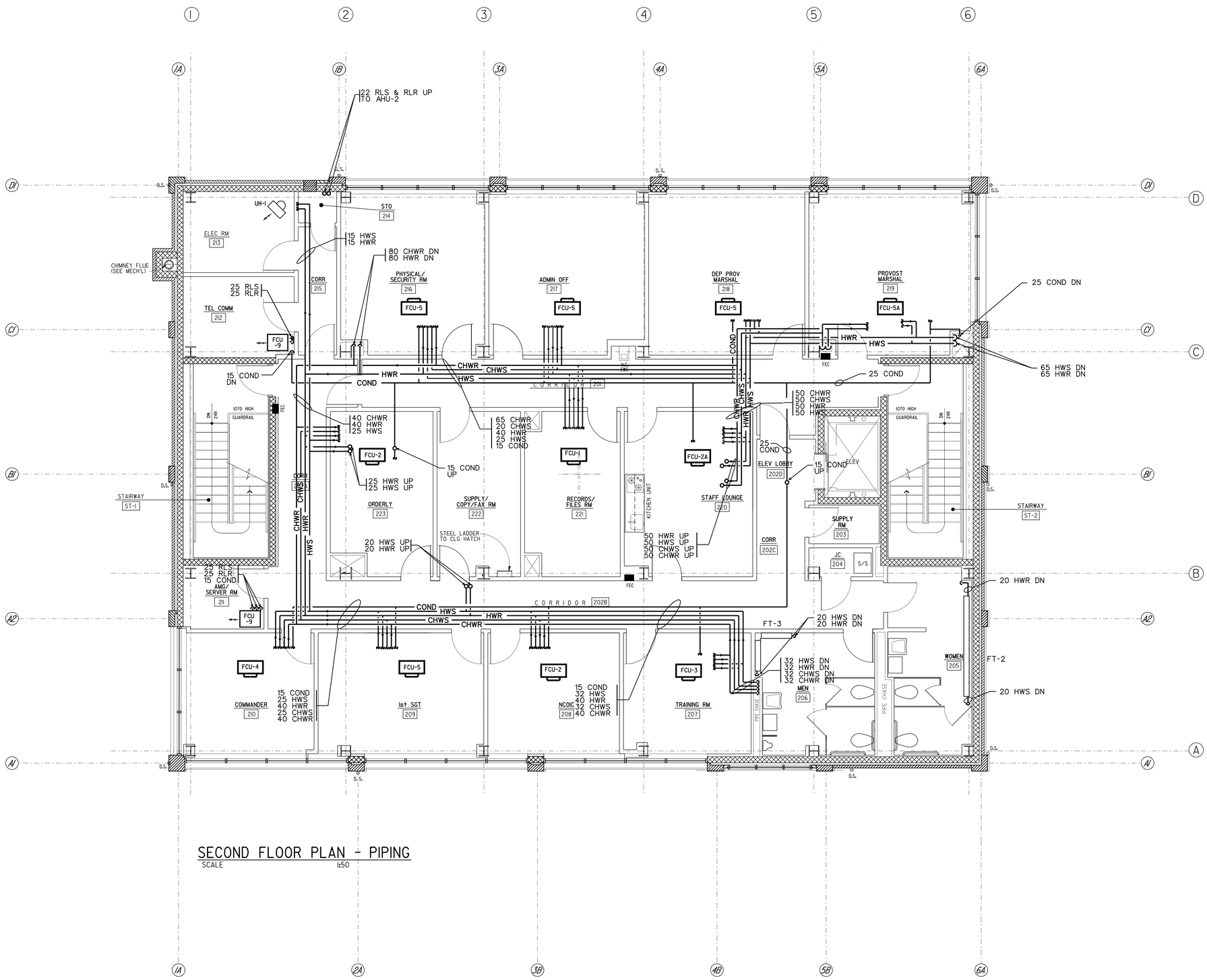


## SECOND FLOOR PLAN - PIPING

SCALE 1:50

GRAPHIC SCALE

1000mm 0 1M 2M 3M 4M 5M

SCALE 1:50

TRUE NORTH

PROJECT NORTH

NOTE: ALL DIMENSIONS SHOWN ARE IN MILLIMETERS UNLESS OTHERWISE NOTED.

US Army Corps of Engineers
New York District

| Symbol | Description | Date | Appr. |
|---|---|---|---|

Designed by:
Dwn by:
Ckd by:
Reviewed by:
Submitted by:
Date:
Size:
Rev:
Drawing file no:
Drawing code:
Plot date: 05-JAN-2009 16:30
Plot by: SOLOMON, DOUGLAS
File name: S:\Secure\Military\Ft Hamilton\MPS\Mechanical\MPS-M-106.dgn

U.S. ARMY ENGINEER DISTRICT
CORPS OF ENGINEERS
NEW YORK, NEW YORK

PN 52224
MILITARY POLICE STATION
FORT HAMILTON, NY

# SECOND FLOOR PLAN PIPING

Sheet reference number:
M–106

Submitted by: e2endfwb
Settler:solomdd:Mp:ft Hamilton:MPS\Mechanical\MPS-M-106.dgn
Plot Date: 05-JAN-2009 16:30

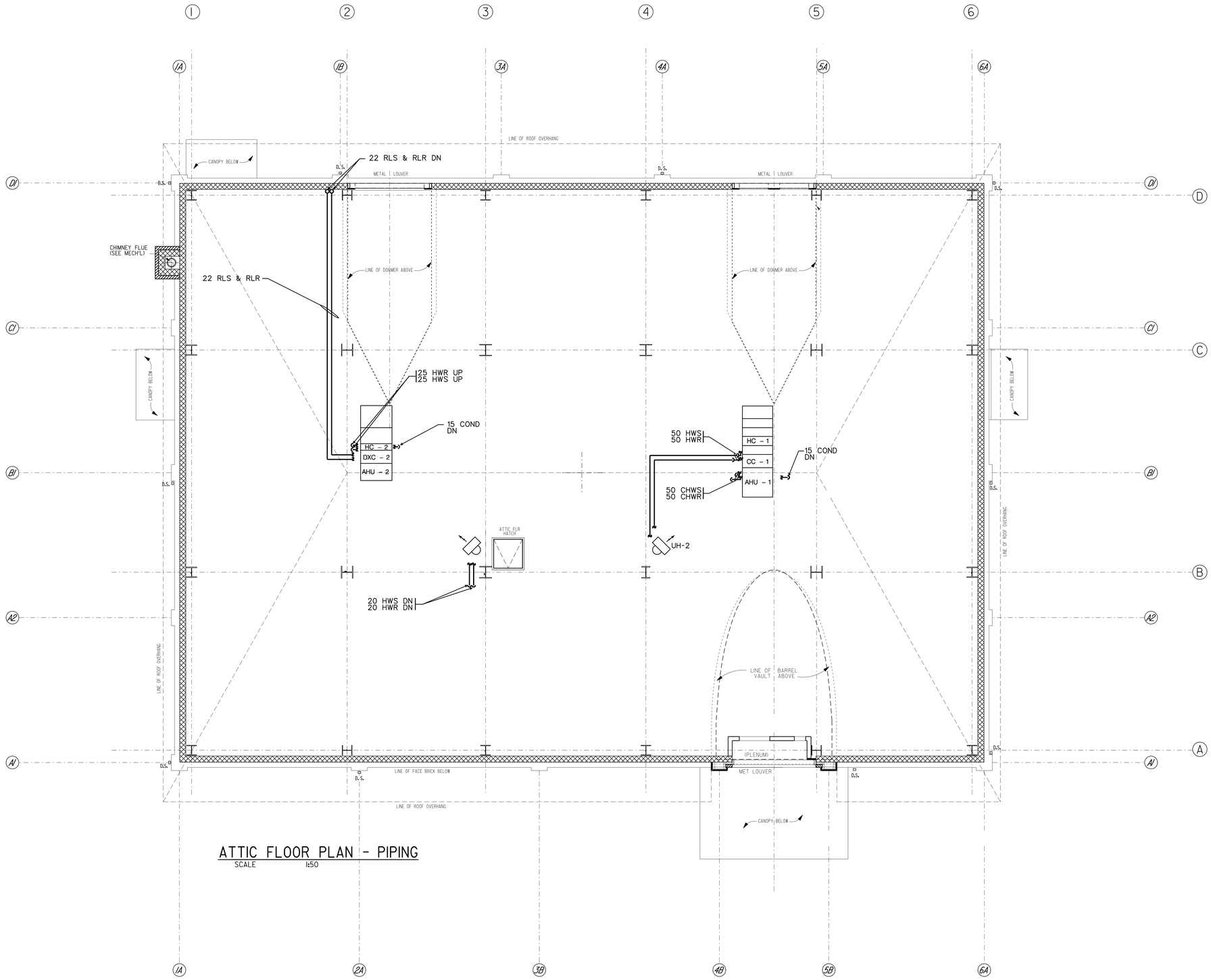


## ATTIC FLOOR PLAN - PIPING

SCALE 1:50

GRAPHIC SCALE

1000mm 0 1M 2M 3M 4M 5M

SCALE 1:50

TRUE NORTH PROJECT NORTH

NOTE: ALL DIMENSIONS SHOWN ARE IN MILLIMETERS UNLESS OTHERWISE NOTED.

US Army Corps of Engineers New York District

| Symbol | Description | Date | Appr |
|---|---|---|---|

U.S. ARMY ENGINEER DISTRICT CORPS OF ENGINEERS NEW YORK, NEW YORK

Designed by: Dwn by: Ckd by: Reviewed by: Submitted by: Date: Drawing file no.: Drawing code: Plot date: 05-JAN-2005 16:31 Plot by: ajoseph Scale: SEE PROJECT DOCUMENT

Size: Rev:

File name: S:\Benson\military\Fort Hamilton\MPS\Mechanical\MPS\a_M-107.dgn

PH. 52224
MILITARY POLICE STATION
FORT HAMILTON, NY

# ATTIC FLOOR PLAN PIPING

Sheet reference number:

M–107

Submitted by: e3endfeb
Location: c:\pwworking\pw01\hamiltonmp01\mechanical\mp01a_m-107.dgn
Plot Date: 05-JAN-2005 16:31

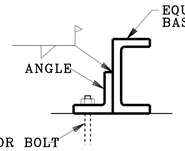


FIGURE "O"

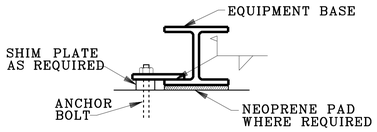


FIGURE "P"

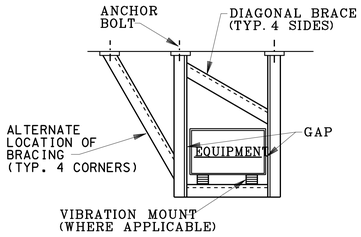


FIGURE "Q"

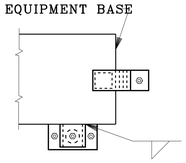


PLAN

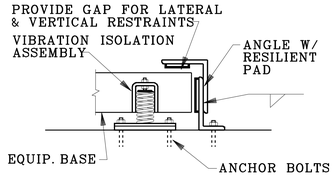


ELEVATION

FIGURE "R"

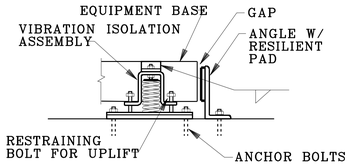


FIGURE "S"

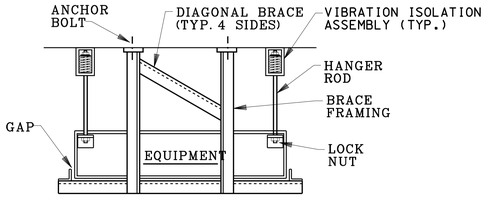


SUSPENDED EQUIPMENT W/ VIBRATION MOUNT

FIGURE "T"

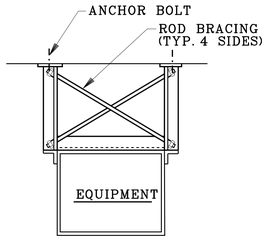


SUSPENDED EQUIPMENT

FIGURE "U"

NOTES:
1. CLEARANCES AT SIDES FOR SPRING MOUNTED EQUIPMENT AS IN FIG. "R" & "S", SHALL BE IN ACCORDANCE WITH MFR'S. RECOMMENDATIONS.
2. SEE MAXIMUM BRACING LENGTHS, TABLE 1, FOR BRACE SIZES.
3. IF EQUIPMENT IS MOUNTED ON NEOPRENE PADS, ANCHOR BOLTS SHALL BE ISOLATED FROM EQUIPMENT BY A NEOPRENE SLEEVE AND WASHER.
4. PROVIDE A MINIMUM OF (4) 1/2" ANCHOR BOLTS FOR EQUIPMENT UP TO 100,000 LBS. AND (4) 3/4" BOLTS FOR EQUIPMENT 100,000 LBS. OR GREATER. ADD (1) ADDITIONAL 3/4" BOLT FOR EACH ADDITIONAL 25,000 LBS.

## EQUIPMENT SEISMIC SUPPORTS

NTS

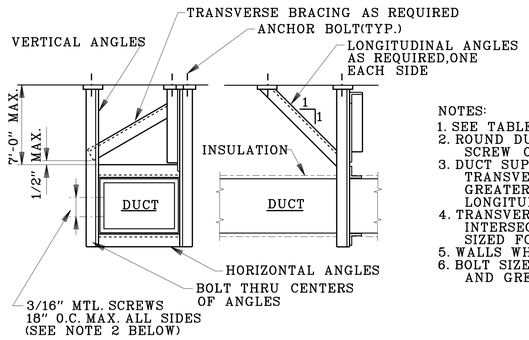


NOTES:
1. SEE TABLE 2 FOR ANGLE SIZES.
2. ROUND DUCT SUPPORTS SHALL BE SIMILAR, EXCEPT (1) 3/16" METAL SCREW ON EACH OF THE FOUR QUADRANTS.
3. DUCT SUPPORT INTERVALS SHALL BE AS FOLLOWS:
   TRANSVERSE SWAY BRACING: MAX. EVERY 30' O.C. EACH HORIZ. TURN GREATER THAN 45\, AND AT END OF EACH RUN.
   LONGITUDINAL SWAY BRACING: MAX. EVERY 60" O.C.
4. TRANSVERSE BRACING MAY SERVE AS HORZ. BRACING OF PERPENDICULAR INTERSECTING DUCTS IF INSTALLED WITHIN 4' OF INTERSECTION AND SIZED FOR LARGER DUCT.
5. WALLS WHICH DUCTS PENETRATE MAY SERVE AS TRANSVERSE BRACING.
6. BOLT SIZE SHALL BE 1/4" UP TO 54" DUCT SIZE AND 3/8" FOR 54 " AND GREATER DUCT SIZE.

## DUCT SEISMIC SUPPORTS

NTS

### TABLE 3

**PIPING SUPPORT SIZES & SPAN INTERVALS**

| PIPE I.D. INCHES (SEE NOTES) | BOLT TO ANGLE OR ROD | TRANSVERSE, LONGITUDINAL, AND VERTICAL ANGLES | ROD DIA. | MAXIMUM SPAN INTERVALS BETWEEN TRANSVERSE SWAY BRACING (FT) | |
|---|---|---|---|---|---|
| | | | | STEEL PIPING | ALL OTHER (5) PIPING MAT'L. |
| 1 | 3/8" | 1-1/2" X 1-1/2" X 3/16" | 3/8" | 27.50 | 13.75 |
| 1-1/4 | 3/8" | 1-1/2" X 1-1/2" X 3/16" | 3/8" | 27.50 | 13.75 |
| 1-1/2 | 3/8" | 1-1/2" X 1-1/2" X 3/16" | 3/8" | 31.25 | 15.00 |
| 2 | 3/8" | 1-1/2" X 1-1/2" X 3/16" | 1/2" | 36.25 | 17.50 |
| 2-1/2 | 3/8" | 2" X 2" X 5/16" | 1/2" | 40.00 | 18.75 |
| 3 | 3/8" | 2" X 2" X 5/16" | 1/2" | 42.50 | 21.25 |
| 3-1/2 | 3/8" | 2" X 2" X 5/16" | 1/2" | 45.00 | 22.50 |
| 4 | 1/2" | 2" X 2" X 5/16" | 5/8" | 48.75 | 23.75 |
| 5 | 1/2" | 2" X 2" X 5/16" | 5/8" | 51.25 | 25.00 |
| 6 | 1/2" | 2" X 2" X 5/16" | 3/4" | 56.25 | 27.50 |
| 8 | 5/8" | 2-1/2" X 2-1/2" X 1/2" | 3/4" | 61.25 | 32.50 |
| 10 | 7/8" | 2-1/2" X 2-1/2" X 1/2" | - | 67.50 | 35.00 |
| 12 | 1" | 3" X 3" X 3/4" | - | 72.50 | 38.75 |

NOTES:
1. MAXIMUM SPAN INTERVALS ARE BASED ON PIPE WEIGHT WITH NO ATTACHMENTS. IF THE WEIGHT OF THE ATTACHMENTS ON A SPAN IS GREATER THAN 10% OF THE PIPE SPAN WEIGHT, ATTACHMENTS SHALL BE LATERALLY BRACED SEPARATELY.
2. FLEXIBLE CONNECTORS SHALL BE USED AS REQUIRED.
3. LONGITUDINAL BRACE INTERVAL SHALL BE MAXIMUM 40 FT.
4. ALL TUBING SHALL BE BRACED AT 4 FT. INTERVALS.
5. CAST IRON SOIL PIPE SHALL BE BRACED AT 10 FT. INTERVALS.
6. SWAY BRACE REFERS TO TRANSVERSE OR LONGITUDINAL SUPPORTS.

### TABLE 1

**MAXIMUM BRACING LENGTHS**

| ITEM(1) | MAXIMUM LENGTH,L(2) |
|---|---|
| ∠ 1" X 1" | 39" |
| ∠ 1-1/4" X 1-1/4" | 48" |
| ∠ 1-1/2" X 1-1/2" | 58" |
| ∠ 1-3/4" X 1-3/4" | 68" |
| ∠ 2" X 2" | 77" |
| ∠ 2-1/2" X 2-1/2" | 97" |
| ∠ 3" X 3" | 116" |
| ∠ 3-1/2" X 3-1/2" | 136" |
| 3/8" ROD | 19" |
| 1/2" ROD | 25" |
| 5/8" ROD | 31" |
| 3/4" ROD | 37" |
| 7/8" ROD | 43" |

NOTES:
1. REFERS TO ANGLES WHERE THE MAXIMUM LENGTH IS RELATIVELY INDEPENDENT OF THICKNESS. i.e. MAX. LENGTH SHOWN FOR A 1" X 1" ANGLE IS GOOD FOR ANGLES 1/4" & 3/8" THICK, ETC.
2. MAX. LENGTH, L, BASED ON L = 200r; LEAST RADIUS OF GYRATION = r.

### TABLE 2

**DUCT SUPPORT ANGLE SIZES**

| DUCT SIZE- DIA. OR LONGER SIDE (IN) | MIN. ANGLE SIZE |
|---|---|
| LESS THAN 42 | 2" x 2" x 1/8" |
| 42 TO 60 | 2-1/2" x 2-1/2" x 3/16" |
| OVER 60 | 3" x 3" x 3/16" |

## SEISMIC BRACING TABLES

NTS

US Army Corps of Engineers
New York District

| Symbol | Description | Date | Appr |
|---|---|---|---|

U.S. ARMY ENGINEER DISTRICT
CORPS OF ENGINEERS
NEW YORK, NEW YORK

Designed by: | Date: | Size: | Rev.
Dwn by: | Ckd by: | Drawing file no.:
Reviewed by: | Drawing code:
Submitted by: | Plot date: 05-JAN-2005 18:01 | Plot by: eSendFab | Scale: (n/2)0.5/1.0/0.0/0.0
File name: S:\Mission\military\Fort Hamilton\MPlan\Mechanical\M500.dgn

PN: 32224
MILITARY SUPPORT STATION
FORT HAMILTON, NY

# SEISMIC BRACING AND SUPPORT DETAILS – 1

Sheet reference number:
M–500

Submitted by: eSendFab
Sent from mailto:jeffrey.r.ward@usace.army.mil
Plot Date: 05-JAN-2005 18:31
S:\Mission\MPlan\Contract\Plans\M500.dgn

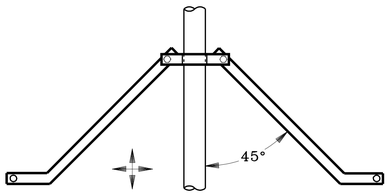


FIGURE "A"

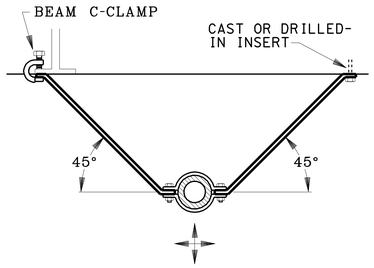


FIGURE "D"

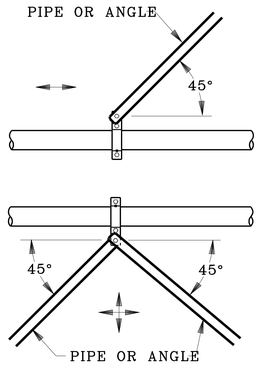


FIGURE "G"

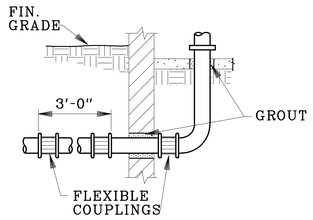


PIPE GROUTED IN WALL

FIGURE "J"

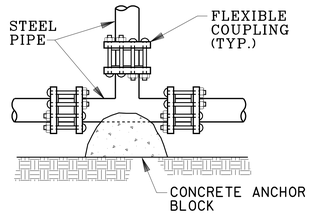


UNDERGROUND PIPING RISER-TEES

FIGURE "M"

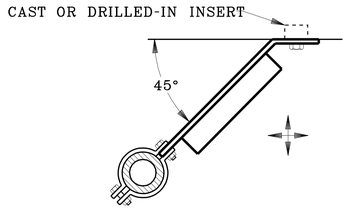


FIGURE "B"

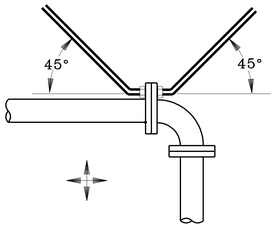


FIGURE "E"

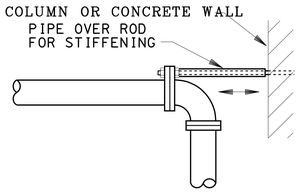


FIGURE "H"

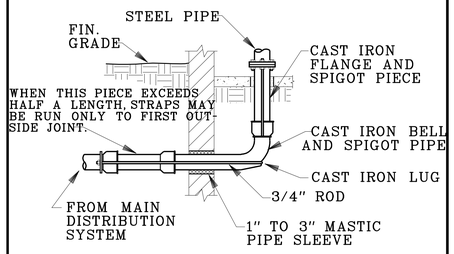


UNGROUTED PIPE

FIGURE "K"

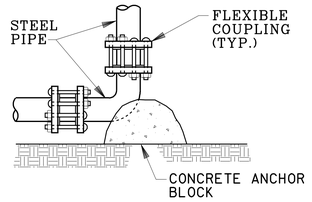


UNDERGROUND PIPING RISER-ELBOWS

FIGURE "N"

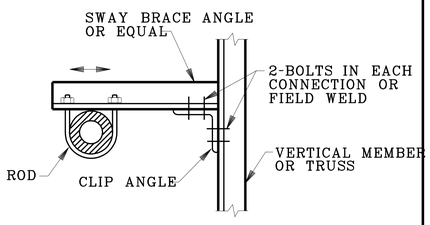


FIGURE "C"

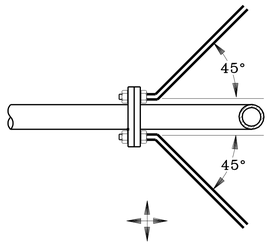


FIGURE "F"

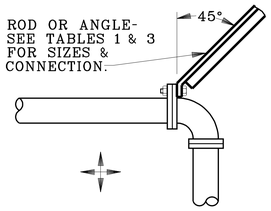


FIGURE "I"

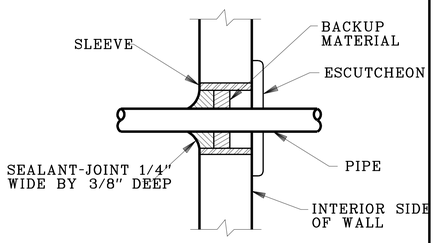


PIPE SLEEVE F/BARE PIPE THRU WALL-ABOVE GRADE

FIGURE "L"

NOTES:
RODS OR ANGLES MAY BE USED FOR SUPPORTS INTERCHANGEABLY. SEE MAXIMUM BRACING LENGTHS SHOWN IN TABLE 1 AND MINIMUM SIZES AND SPAN INTERVALS IN TABLE 3.

ARROWS INDICATE DIRECTION OF AVAILABLE FORCE RESISTANCE, TYPICAL.

## SEISMIC PIPE SUPPORT DETAILS

NTS

US Army Corps of Engineers
New York District

U.S. ARMY ENGINEER DISTRICT
CORPS OF ENGINEERS
NEW YORK, NEW YORK

Designed by: | Date: | Size: | Rev.
Dwn by: | Ckd by: | Drawing file no.:
Reviewed by: | Drawing code:
Submitted by: | Plot date: 05-JAN-2005 16:31 | Plot by: eJendrab | Scale: 0.000001:1.000000
File name: S:\Mission\military\Fort Hamilton\dwfg\Mechanical\dmfg M-501.dgn

PN: 92224
MILITARY POLICE STATION
FORT HAMILTON, NY

SEISMIC BRACING AND SUPPORT DETAILS – 2

Sheet reference number:
M–501

Submitted by: eJendrab
Plot Date: 05-JAN-2005 16:31
Plot by: eJendrab
Scale: 0.000001:1.000000
File name: S:\Mission\military\Fort Hamilton\dwfg\Mechanical\dmfg M-501.dgn

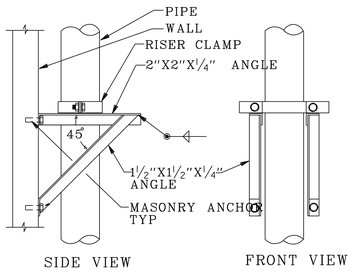


VERTICAL PIPE SUPPORT DETAIL

NTS

NOTE:
THE NUMBER OF PIPES SUPPORTED AND LEVELS OF SUPPORT WILL VARY WITH THE RELATIVE LOCATION TO THE CONDENSING UNIT.

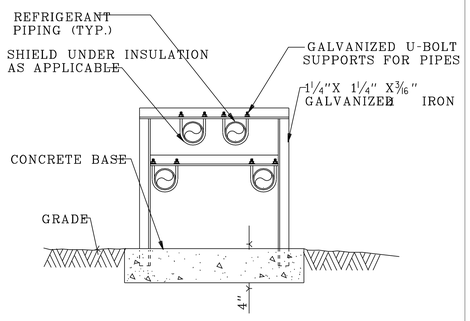


REFRIGERANT PIPE SUPPORT DETAIL

NTS

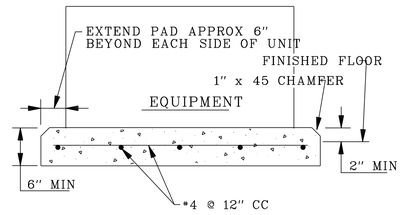


TYPICAL EQUIPMENT PAD DETAIL

NTS

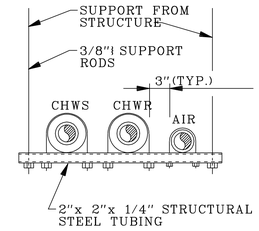


TRAPEZE HANGAR ASSEMBLY

NTS

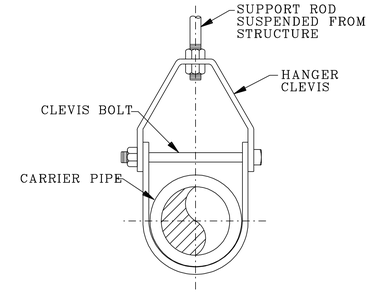


TYPICAL ADJUSTABLE CLEVIS HANGAR

NTS

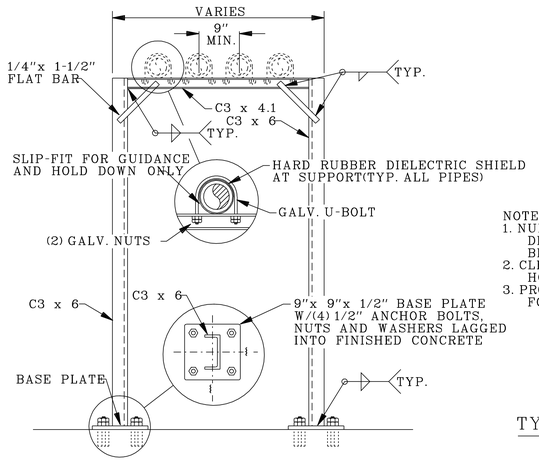


NOTES:
1. NUMBER OF PIPE SUPPORT RUNGS AND OVER-ALL DIMENSIONS VARY WITH NUMBER OF PIPES TO BE SUPPORTED.
2. CLEAN STEEL OF ALL MILL SCALE AND RUST. HOT DIP GALVANIZE ENTIRE STRUCTURE.
3. PROVIDE GALV. STEEL INSULATION SHIELDS FOR INSULATED PIPING.

TYPICAL PIPE SUPPORT STRUCTURE

NTS

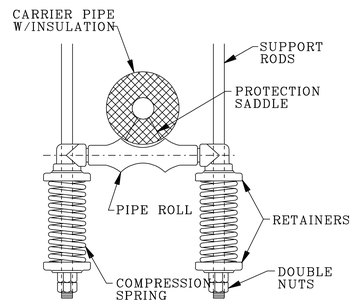


TYPICAL SPRING CUSHION HANGAR DETAIL

NTS

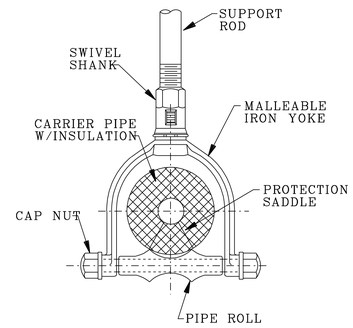


TYPICAL ADJUSTABLE SWIVEL PIPE HANGAR DETAIL

NTS

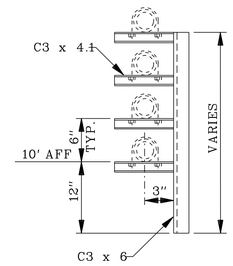


NOTE: NUMBER OF PIPE SUPPORT RUNGS AND OVER-ALL DIMENSION VARIES WITH NUMBER OF PIPES SUPPORTED AND WALL SUPPORT POINTS. REFER TO ARCH. AND STRUCT. DWGS. FOR DETAILS OF SECURING TO WALL STRUCTURE.

TYPICAL WALL SUPPORTED PIPE HANGAR DETAIL

NTS

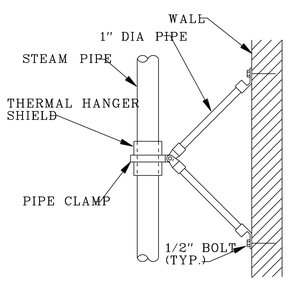


TYPICAL VERTICAL PIPE SUPPORT DETAIL

NTS

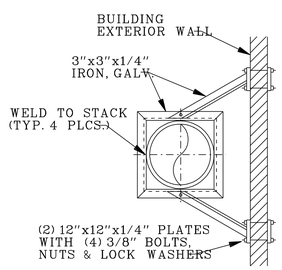


NOTE:
STACK SUPPORTS 8'-0" O.C. (TYP.) AND AT ROOF EDGES

TYPICAL VERTICAL STACK SUPPORT DETAIL

NTS

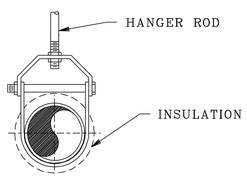


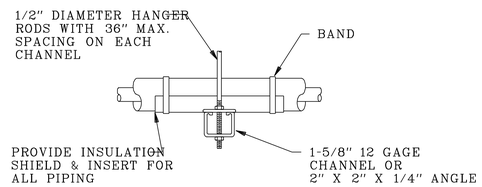


| MAXIMUM PIPE/TUBING SUPPORT SPACING, FEET | | | | | | | | | | | | | | | | | |
|---|---|---|---|---|---|---|---|---|---|---|---|---|---|---|---|---|---|
| NOM. SIZE | THRU 3/4" | 1 | 1-1/4 | 1-1/2 | 2 | 2-1/2 | 3 | 4 | 5 | 6 | 8 | 10 | 12 | 14 | 16 | 18 | 20 | 24 |
| PIPE | 7 FT | 7 | 7 | 9 | 10 | 11 | 12 | 14 | 16 | 17 | 19 | 22 | 23 | 25 | 27 | 28 | 30 | 32 |
| TUBING | 5 FT | 6 | 7 | 8 | 8 | 9 | 10 | 12 | 13 | 14 | 16 | - | - | - | - | - | - | - |
| NOTE: FOR TRAPEZE HANGER TAKE SPACING OF SMALLEST SIZE ON TRAPEZE | | | | | | | | | | | | | | | | | | |

X | X

TYPICAL PIPE SUPPORT DETAILS

SCALE: X

US Army Corps of Engineers
New York District

| Rev. | Symbol | Description | Date | Appr. |
|---|---|---|---|---|

Designed by:
Dwn by:
Ckd by:
Reviewed by:
Submitted by:
Date:
Size:
Drawing file no.:
Drawing code:
Plot date: 05-JAN-2005 16:31
Plot scale: 0.4000000
Scale: 0.4000000:1000000

U.S. ARMY ENGINEER DISTRICT
CORPS OF ENGINEERS
NEW YORK, NEW YORK

File name: S:\Division\Military\Fort Hamilton\MPRg\Mechanical\MPRg_M-502.dgn

P.N. 82024
MILITARY PUBLIC SERVICE STATION
FORT HAMILTON, NY

PIPING SUPPORT DETAILS

Sheet reference number:
M–502

Plot Date: 05-JAN-2005 16:31
Plot Scale: 0.4000000:1000000
Plot Driver: pdf
Submitted by: e3ernd1wb
Sitefile: c:\mcl\sites\fortmcl\dgns\m-502.dgn

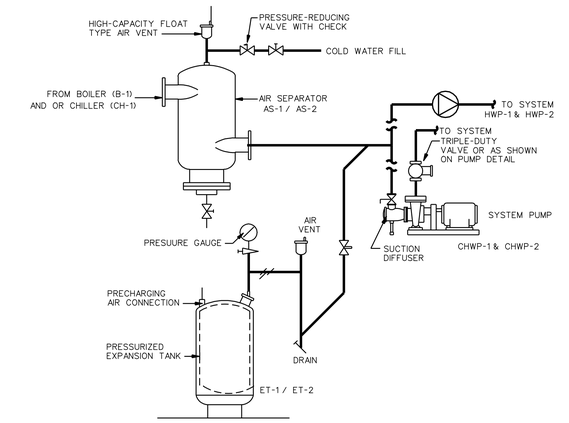


## TYPICAL HYDRONIC AIR CONTROL INSTALLATION WITH PRESSURIZED EXPANSION TANK (FOR HOT WATER / CHILLED WATER SYSTEM)

NTS

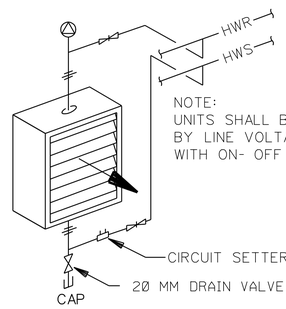


NOTE:
UNITS SHALL BE CONTROLLED BY LINE VOLTAGE THERMOSTATS WITH ON- OFF AUTO CONTROLS .

NOTE:
1. AUTOMATIC VENT NOT TO BE USED AT AREAS WITH ELECTRICAL EQUIPMENT

## TYPICAL HORIZONTAL DELIVERY UNIT HEATER CONNECTIONS

NTS

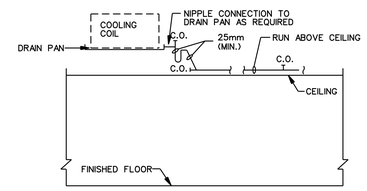


## TYPICAL COOLING COIL DRAIN & CONDENSATE DRAIN CONNECTION

NTS

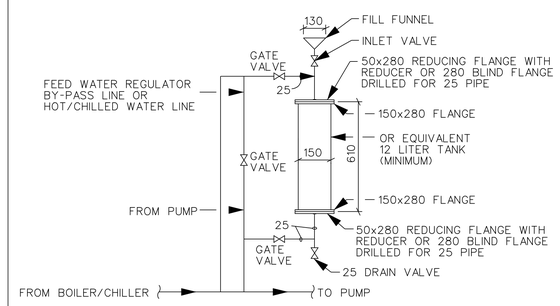


## TYPICAL GLYCOL SHOT TYPE FEEDER

NTS

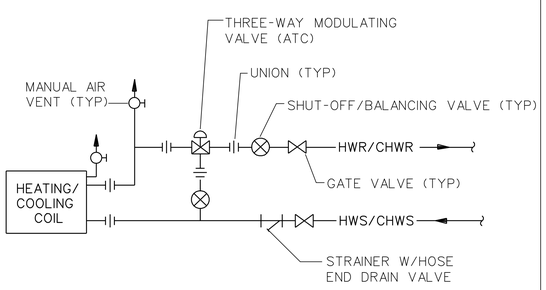


| RUN-OUT PIPE SCHEDULE | |
|---|---|
| L/S RANGE | PIPE SIZE (MM) |
| 0 - 0.057 | 15 |
| 0.063 - 0.183 | 20 |
| 0.189 - 0.435 | 25 |
| 0.443 - 0.688 | 32 |
| 0.694 - 1.192 | 40 |

NOTE:

1. SEE FAN COIL UNIT DETAIL AND SCHEDULE
2. THE RUN-OUT PIPE SCHEDULE SHALL ALSO APPLY FOR THE FIN-TUBE RADIATION. SEE FIN-TUBE RADIATION SCHEDULE FOR L/S WITH A MINIMUM PIPE SIZE OF 20 MM.
3. CONDENSATE PIPING RUN-OUT SHALL BE A MINIMUM OF 15 MM.

## TYPICAL FAN COIL UNIT PIPING SCHEMATIC (FOR HEATING & COOLING COIL)

NTS

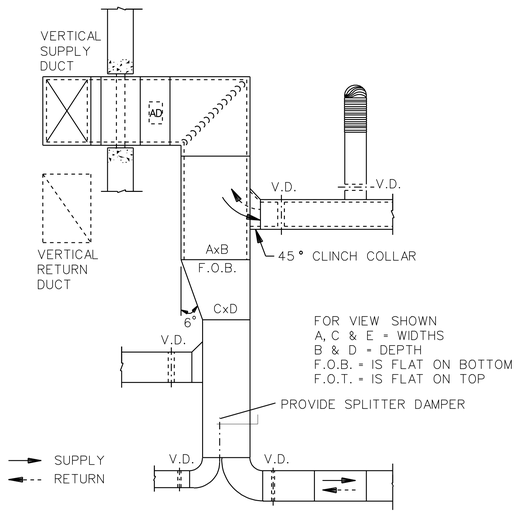


## TYPICAL SUPPLY OR RETURN DUCT DETAIL

NTS

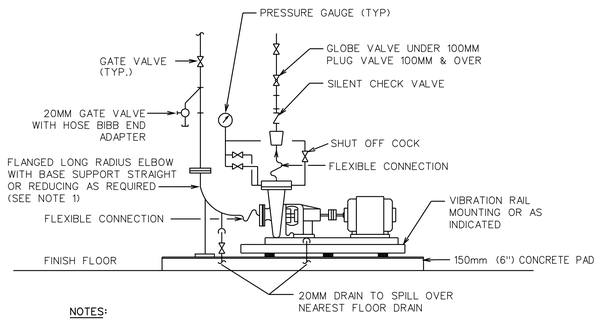


NOTES:

1. INSTALL WITH FIVE (5) DIAMETERS OF STRAIGHT PIPE BETWEEN THE ELBOW & PUMP SUCTION. A SUCTION DIFFUSER MAY BE USED IN LIEU OF THE ELBOW, STRAIGHT PIPE AND STRAINER.
2. MULTIPURPOSE VALVE MAY BE SUBSTITUTED FOR CHECK, GLOBE & GATE VALVE, SHOWN ON PUMP DISCHARGE.

## TYPICAL END SUCTION PUMP INSTALLATION DETAIL

NTS

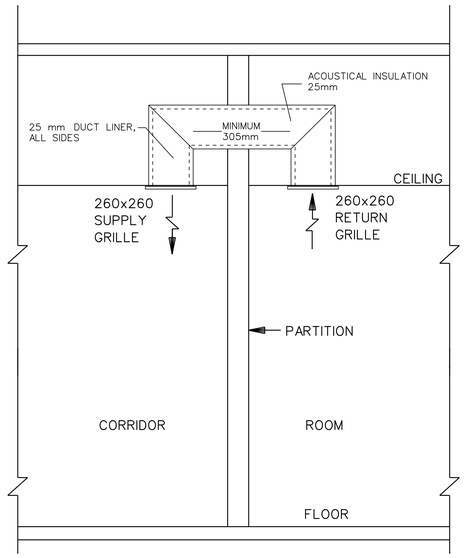


## TYPICAL AIR TRANSFER BOOT DETAIL

NTS

US Army Corps of Engineers
New York District

| Symbol | Description | Date | ADP |
|---|---|---|---|

Designed by: | Date: | Size: | Rev:
Dwn by: | Ckd by: | Drawing file no.:
Reviewed by: | Drawing code:
Submitted by: | Plot date: 05-JAN-2005 16:31 | Plot scale: AS-NOTED | Scale: 0.0000x0.1000000
File name: S:\Vincent Lindley\Fort Hamilton\UPRG\Mechanical\UPRG M-503.dgn

U.S. ARMY ENGINEER DISTRICT
CORPS OF ENGINEERS
NEW YORK, NEW YORK

PN: 82228
MILITARY POLICE STATION
FORT HAMILTON, NY

MECHANICAL DETAILS – 1

Sheet reference number:
M–503

Submitted by: e3endfeb
S:\Fort Hamilton\PS1\Mechanical\UPRG M-503.dgn
Plot Date: 05-JAN-2005 16:31

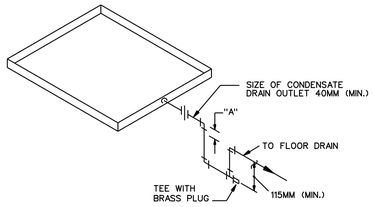


NOTE:
DIMENSION "A' SHALL BE EQUAL TO 1.5 TIMES THE UNIT FAN STATIC PRESSURE IN PA OF WATER

## TYPICAL PIPING AT DRIP PAN FOR AHU DETAIL

NTS

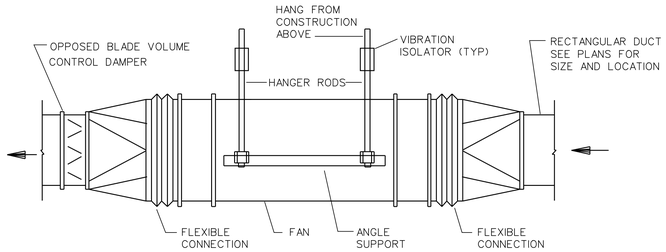


## TYPICAL IN-LINE FAN DETAIL

NTS

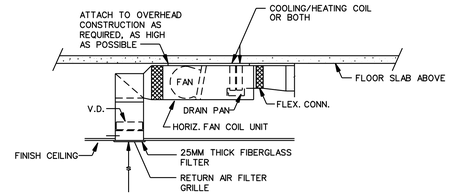


## TYPICAL HORIZONTAL FAN COIL UNIT DETAIL

NTS

NOTES:
1. WHEN THE RETURN AIR GRILLE IS NOT DUCTED TO THE FAN COIL UNIT BUT THE FAN COIL UNIT IS RECESSED IN THE CEILING, PROVIDE FILTER BACK TO THE FAN COIL UNIT WITH BIRD SCREEMN.
2. WHEN THE FAN COIL UNIT IS LOCATED IN A ROOM WITHOUT A HUNG CEILING, THE RETURN GRILLE SHALL BE AN INTEGRAL PART OF THE FAN COIL UNIT.

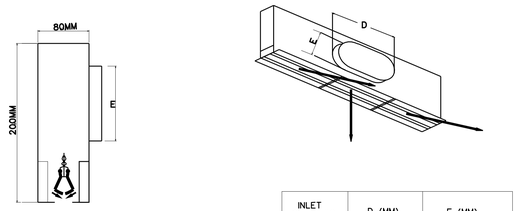


| INLET SIZE (MM) | D (MM) | E (MM) |
|---|---|---|
| 150 | 190 | 80 |
| 200 | 250 | 100 |
| 250 | 320 | 125 |

NOTES:
1. PLENUM SHALL BE AN INTEGRAL PART OF LINEAR DIFFUSER. ASSEMBLY AND FACTORY FABRICATED.
2. PROVIDE VOLUME CONTROL DAMPER.
3. NUMBER OF SLOTS SHALL BE AS PER SCHEDULE.
4. LINEAR DIFFUSER AIR SUPPLY PLENUM SHALL BE INSULATED.

## TYPICAL LINEAR PLENUM SLOT DIFFUSER DETAIL

NTS

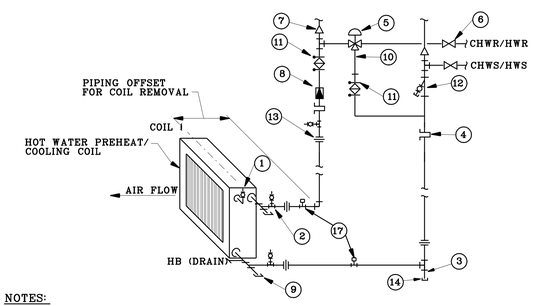


**LEGEND**

1. MANUAL VENT
2. BALL VALVE(GAUGE CONNECTION)
3. DIRT LEG 20MM X 100MM LONG
4. THERMOWELL, TYP.
5. THREE-POSITION CONTROL VALVE
6. GATE VALVE, TYP.
7. AUTOMATIC AIR VENT VALVE, TYP.
8. AUTOMATIC FLOW CONTROL VALVE WITH PRESSURE TAPS, TYP.
9. COIL BLOWOUT CAP, TYP.
10. PIPING AT THREE-POSITION VALVE SHALL BE SAME SIZE AS PORTS
11. CALIBRATED BALANCING VALVE WITH FLOW CHECKING TAPS
12. STRAINER WITH BALL VALVE DRAIN
13. UNION, TYP.
14. PIPE CAP, TYP.
15. NOT USED
16. NOT USED
17. (PETES) PLUG

NOTES:
1. COILS W/2 ROWS OR GREATER SHALL BE PIPED FOR COUNTER FLOW OF WATER AND AIR
2. PROVIDE PIPING REDUCERS AS REQUIRED.
3. PIPING SCHEMATIC IS TYPICAL FOR BOTH HEATING AND COOLING COILS. PROVIDE SEPARATE PIPING LAYOUT AS SHOWN FOR COOLING COIL AS IS SHOWN FOR HOT WATER COIL

## TYPICAL AHU COOLING/HEATING COIL PIPING SCHEMATIC

NTS

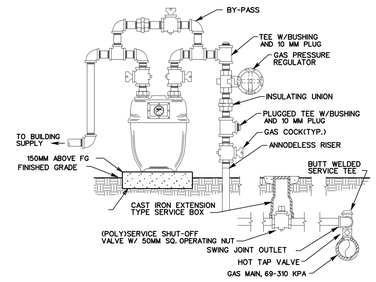


NOTES:
1. LINE SIZES AS CALLED FOR ON SITE PLAN.
2. CONTRACTOR SHALL BE RESPONSIBLE FOR CONNECTING GAS LINE TO THE EXISTING 200 MM GAS MAIN.

## TYPICAL GAS SERVICE (W/BY-PASS) DETAIL

NTS

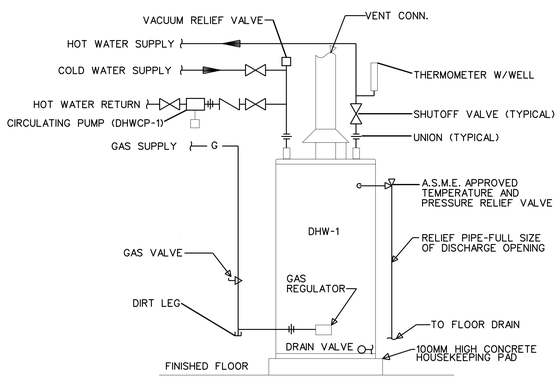


NOTE:
FOR SIZE AND CONTINUATION OF HOT & COLD WATER SUPPLY AND HOT WATER RETURN SEE FLOOR PLAN.

## TYPICAL GAS FIRED WATER HEATER DETAIL

NTS

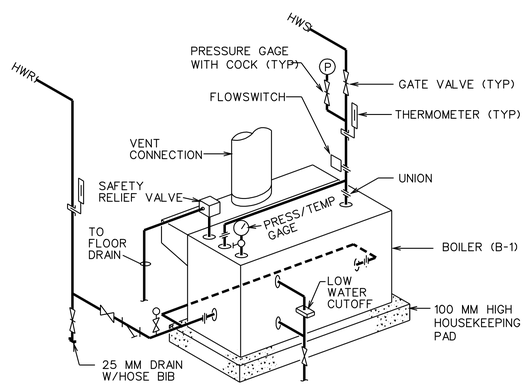


## TYPICAL HOT WATER BOILER CONNECTION

NTS

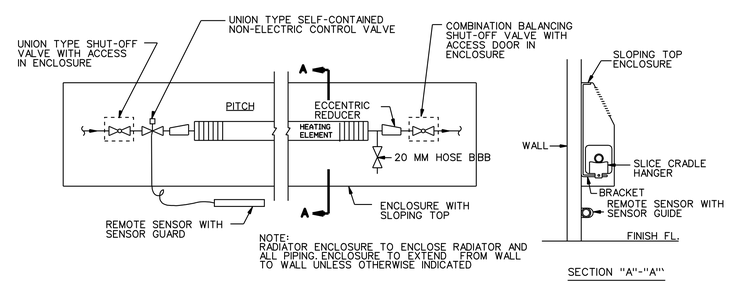


NOTE:
RADIATOR ENCLOSURE TO ENCLOSE RADIATOR AND ALL PIPING. ENCLOSURE TO EXTEND FROM WALL TO WALL UNLESS OTHERWISE INDICATED

## TYPICAL FIN-TUBED PIPING DETAIL

NTS

US Army Corps of Engineers
New York District

| Symbol | Description | Date | APP |
|---|---|---|---|

U.S. ARMY ENGINEER DISTRICT
CORPS OF ENGINEERS
NEW YORK, NEW YORK

Designed by: | Date: | Size: | Rev:
Dwn by: | Ckd by: | Drawing file no.:
Reviewed by: | Drawing code:
Submitted by: | Plot date: 05-JAN-2006 16:31 | Plot by: ADMINISTRATOR | Scale: 0.0208333"/1000.00
File name: S:\Renovation\Military\Fort Hamilton\UFRSA\Mechanical\UFRSA M-504.dgn

PN: 82224
MILITARY HOUSING
FORT HAMILTON, NY

MECHANICAL DETAILS – 2

Sheet reference number:
M–504

Plot Date: 05-JAN-2005 16:31
Submitted by: e3endfab
S:\Fortnorth\military\ft hamilton\UFRSA\Mechanical\UFRSA M-504.dgn

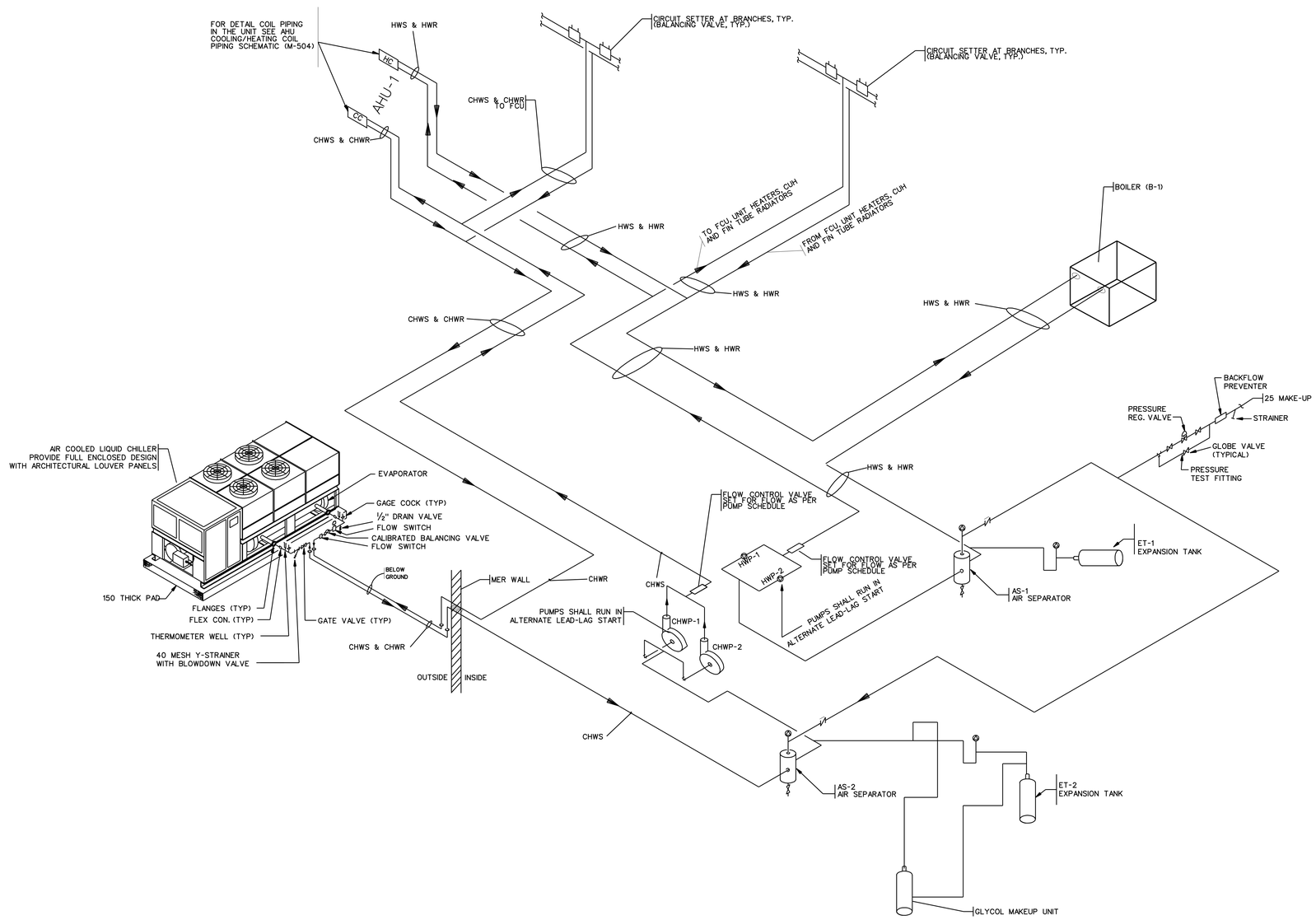


TYPICAL HOT/CHILLED WATER PIPING SCHEMATIC DETAIL

NTS

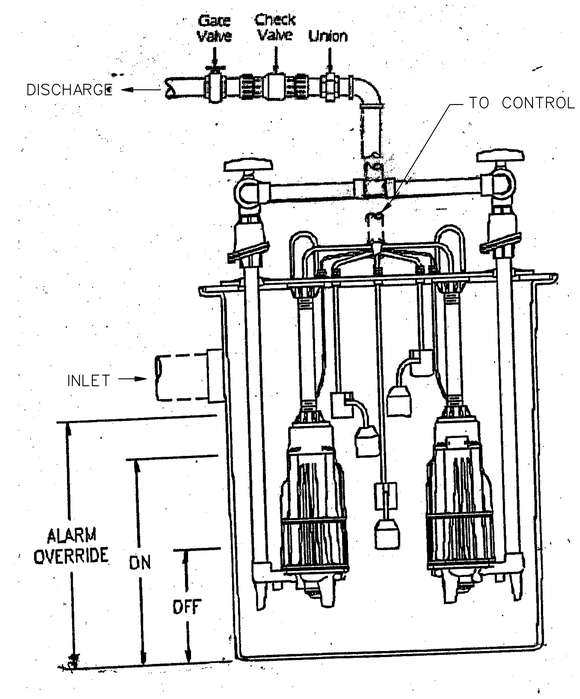


TYPICAL SEWAGE EJECTOR DETAIL

NTS

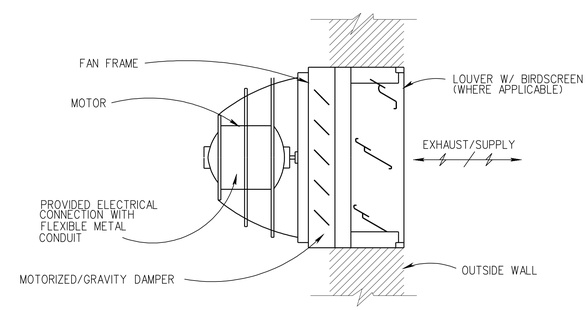


TYPICAL PROPELLER EXHAUST/SUPPLY FAN DETAIL

NTS

US Army Corps of Engineers
New York District

| Symbol | Description | Date | Appr. |
|---|---|---|---|

Designed by: | Date: | Size | Rev.
Dwn by: | Ckd by: | Drawing file no.:
Reviewed by: | Drawing code:
Submitted by: | Plot date: 05-JAN-2005 16:31 Plot by: e-Dwin Date: 0.00/00/00 0:00:00
File name: S:\Resources\Military\Fort Hamilton\JPSigs\Mechanical\JPHa M-505.dgn

U.S. ARMY ENGINEER DISTRICT CONTRACT NO. W912DS-05-B-0003 NEW YORK, NEW YORK

MILITARY PACKET STATION
FORT HAMILTON, NY

MECHANICAL DETAILS - 3

Sheet reference number:
M-505

Submitted by: e3enefieb
S:\office-automation-prior1 hamilton\MPS\JPsmallpacket\JPHa M-505.dgn
Plot Date: 05-JAN-2005 16:31

## GRILLE/DIFFUSER/REGISTER SCHEDULE

| MARK | CMS | LOCATION (ROOM) | DIFFUSER /GRILLE TYPE | NECK SIZE (MM) | FUNCTION | THROW (MM) | REMARKS |
|---|---|---|---|---|---|---|---|
| 1 | .0095 | RMS 106,107,208,210, 218,222,223 | CEILING DIFFUSER | 150x150 | SUPPLY | 1525 | SEE NOTES 1,2,3,4 |
| 2 | .0189 | RMS 105,207,209,217, 219 | | | | | |
| 3 | .0236 | RM 105 | | | | | |
| 4 | .0260 | RM 105 | | | | | |
| 5 | .0284 | RMS 108,109,110,118, 119,216 | | | | | |
| 6 | .0354 | RMS 122,123 | GRILLE | | | | SEE NOTES 1,2,3,5 |
| 7 | .0472 | RMS B01B,220 | CEILING DIFFUSER | | | | SEE NOTES 1,2,3,4 |
| 8 | .0496 | RMS 221,222 | | | | 2135 | |
| 9 | .0661 | RM 220 | | 230x230 | | 2135 | |
| 10 | .0685 | RM 220 | | | | 2135 | |
| 11 | .0803 | RM 120 | | | | 3050 | |
| 12 | .1086 | RMS B03,B10A,B10B,B13B, B13D | | | | 3355 | |
| 13 | .1133 | RM B03 | | | | 3355 | |
| 14 | .1345 | RM 223 | | | | 3355 | |
| 15 | .1652 | RM B03 | | 310x310 | | 4575 | |
| 16 | .2195 | RM B03 | | 310x310 | | 4575 | |
| A | .0236 | RM 121 | REGISTER | 150x150 | RETURN | —— | SEE NOTES 1,2,3 |
| B | .0496 | RMS 221,222 | | 200x150 | | | |
| C | .0756 | RMS 106,108,117 | | 260x150 | | | |
| D | .0991 | RMS 105,108,110 | | 260x260 | | | |
| E | .1132 | RM 106 | | | | | |
| F | .1345 | RMS 208,220,223 | | | | | |
| G | .1511 | RM 107 | | 310x260 | | | |
| H | .1652 | RM 207 | | 310x260 | | | |
| H1 | .2053 | RM 120 | | 310x310 | | | |
| IB | .2502 | RM 118 | | 360x360 | | | |
| J | .2879 | RMS 210,218 | | 360x360 | | | |
| K | .3257 | RMS 209,216,217,219 | | 410x410 | | | |
| L | .4389 | RMS B03,109,119 | | 510x510 | | | |
| S | .0189 | RM 111 | GRILLE | 150x150 | EXHAUST | | |
| T | .0236 | RMS B12,102,103,204, 213 | | | | | |
| U | .0284 | RMS B05,B14 | | | | | |
| V | .0472 | RMS B10C,B13C,116, 205 | | 200x150 | | | |
| W | .0614 | RM B10B | | 200x150 | | | |
| X | .0708 | RMS B13B,115,206 | | 260x150 | | | |
| Y | .0803 | RMS B04,B13D | | 260x150 | | | |
| Z | .1251 | RM B02 | | 260x260 | | | |

NOTES:
1. FOR ALL GRILLES, DIFFUSERS AND REGISTERS, THE MAXIMUM STATIC PRESSURE LOSS IS 49.8 Pa.
2. PROVIDE ADJUSTABLE VOLUME CONTROL FOR ALL UNITS.
3. FOR ALL GRILLES, DIFFUSERS AND REGISTERS, THE MAXIMUM NC SHALL BE 30.
4. CEILING DIFFUSERS SHALL BE IN A 610 MM X 610 MM CEILING GRID.
5. MAXIMUM SECURITY GRILLE SHALL HAVE A 10 GAUGE 304 STAINLESS STEEL FACE WITH 5/16 INCHES DIAMETER HOLES ON 7/16 INCHES STAGGERED CENTERS. THE SLEEVE SHALL BE 10 GAUGE 304 STAINLESS STEEL AND SHALL BE SKIP WELDED TO THE FACE PLATE AND ALONG THE ENTIRE LENGTH OF ALL SLEEVE SEAMS. GRILLE SHALL BE TITUS MODEL SG-PR-SS OR APPROVED EQUAL.

## FAN COIL UNIT SCHEDULE

| UNIT NO. | UNIT TYPE | AREA SERVED | CMS | EWT °C | LWT °C | COOLING KW TOTAL | COOLING KW SENSIBLE | COOLING L/S | HEATING KW | HEATING L/S | WATTS | ESP Pa | REMARKS |
|---|---|---|---|---|---|---|---|---|---|---|---|---|---|
| FCU-1 | HDSR | RM 105,110 221 | .099 | 7.15 | 12.65 | 1.43 | 1.11 | 0.06 | 1.58 | 0.03 | 22.37 | 111 | SEE NOTES 1,2,3,5,6,7 |
| FCU-2 | | RMS 208,223 | .134 | | | 2.22 | 1.67 | 0.10 | 1.61 | 0.03 | 29.82 | | |
| FCU-2A | | RM 220 | .134 | | | 2.22 | 1.67 | 0.10 | 2.25 | 0.04 | 29.82 | | |
| FCU-3 | | RMS 207 | .165 | | | 3.25 | 2.28 | 0.14 | 2.10 | 0.04 | 37.28 | | |
| FCU-4 | | RMS 210 | .287 | | | 4.30 | 3.25 | 0.19 | 1.70 | 0.03 | 52.19 | | |
| FCU-5 | | RMS 209,216, 217,218 | .325 | | | 5.86 | 4.16 | 0.26 | 2.93 | 0.06 | 89.48 | | |
| FCU-5A | | RMS 107,118, 219 | .325 | | | 5.86 | 4.16 | 0.26 | 3.51 | 0.07 | 89.48 | | |
| FCU-5B | HDSGR | RMS B10A,B10B | .325 | | | —— | —— | —— | 3.51 | 0.07 | 89.48 | | |
| FCU-6 | HDSR | RM B03,107 | .438 | | | 6.38 | 4.92 | 0.28 | 8.06 | 0.17 | 52.19 | | |
| FCU-6A | HDSR | RMS 109,119 | .438 | | | 6.38 | 4.92 | 0.28 | 3.51 | 0.07 | 52.19 | | |
| FCU-6B | HDSGR | RMS B13B,B13D | .438 | | | —— | —— | —— | 8.06 | 0.17 | 52.19 | | |
| FCU-8 | HC | RM B07 | .283 | | | 6.0 | 4.3 | 0.25 | —— | —— | 44.74 | 49.72 | SEE NOTES 4,5,6,7 |
| FCU-9 | V | RMS 114,211, 212 | .283 | | | 6.0 | 4.3 | 0.25 | —— | —— | 44.74 | 49.72 | SEE NOTES 4,5,6,7 |

NOTES:
1. COOLING CAPACITY IS BASED ON 25.3 °C DB & 50% RH. ENTERING WATER TEMPERATURE OF 7.15 °C WITH -12.1 °C WATER TEMPERATURE DROP.
2. FAN COIL UNITS SHALL HAVE SEPARATE HEATING AND COOLING COILS. IN HEATING MODE, COIL CONTROL VALVE SHALL MODULATE TO MAINTAIN SPACE TEMPERATURE AT 19.8 °C.
3. HEATING AND COOLING COILS SHALL BE SIZED WITH 35% PROPYLENE GLYCOL SOLUTION.
4. COOLING COILS SHALL BE DIRECT EXPANSION COILS.
5. UNIT TYPE:
   HC - HORIZONTAL, CABINET SHALL BE CEILING MOUNTED.
   HDSR - HORIZONTAL, DUCTED SUPPLY & RETURN
   HDSGR - HORIZONTAL RECESSED, DUCTED SUPPLY & INTERGAL GRILLE RETURN
   V - VERTICAL, CABINET STYLE HI-RISE OR STACK
6. PROVIDE LOCAL SAFETY DISCONNECT SWITCH.
7. PROVIDE FACTORY BUILT AND INSTALLED PIPING PACKAGE. SEE FAN COIL PIPING DETAIL ON DRAWING M-503.

## LINEAR DIFFUSER/REGISTER SCHEDULE

| SYMBOL | SLOT NUMBER | SLOT SUPPLY (MM) | NOMINAL INLET DIMENSION (MM) | MAXIMUM RATING CMS | MAXIMUM RATING Pa | LENGTH (MM) | REMARKS |
|---|---|---|---|---|---|---|---|
| 1 | 2 | 15 | 150 | .038 | 18.62 (MAX.) | 1220 | SEE NOTES 1,2 |
| 2 | | 15 | 150 | .045 | 25.09 (MAX.) | | |
| 3 | | 20 | 200 | .054 | 8.45 (MAX.) | | |
| 4 | | | | .061 | 11.37 (MAX.) | | |
| 5 | | | | .072 | 15.40 (MAX.) | | |
| 6 | | | | .075 | 15.40 (MAX.) | | |
| 7 | | | | .080 | 19.63 (MAX.) | | |
| 8 | | | | .083 | 19.63 (MAX.) | | |
| 9 | | 25 | 260 | .088 | 13.42 (MAX.) | | |
| 10 | | | 310 | .096 | 9.94 (MAX.) | | |
| 11 | | | | .099 | 12.42 (MAX.) | | |
| 12 | | | | .111 | 15.40 (MAX.) | | |
| 13 | | | | .125 | 18.63 (MAX.) | | |
| 14 | 3 | | | .163 | 17.89 (MAX.) | | |

NOTES
1- ACTUAL CMS SHOWN ON FLOOR PLANS
2- REFERENCE DETAIL ON SHT. M-504 FOR OPENING SIZE DIMENSIONS.

US Army Corps of Engineers
New York District

| Symbol | Description | Date | Appr |
|---|---|---|---|

Designed by: | Date: | Size | Rev.
Dwn by: | Ckd by: | Drawing file no.:
Reviewed by: | Drawing code:
Submitted by: | Plot date: 05-JAN-2005 16:31 Plot by: eBendfeb Scale: 0.0000271000000
File name: S:\Division\Military\Fort Hamilton\MPlbg\Mechanical\MPlbg M-600.dgn

U.S. ARMY ENGINEER DISTRICT
CORPS OF ENGINEERS
NEW YORK, NEW YORK

PN 82024
MILITARY POLICE STATION
FORT HAMILTON, NY

MECHANICAL SCHEDULES – 1

Sheet reference number:
M–600

Submitted by: eBendfeb
Sattrdecembilterprefer: Hamilton\MPS\Drawings\Mechanical\MPlbg M-600.dgn
Plot Date: 05-JAN-2005 16:31

# AIR HANDLING UNIT SCHEDULE

| UNIT NO. | SUPPLY FAN | | | | | | COOLING COIL | | | | | | | | | | | | | | | HEATING COIL | | | | | | | | | | REMARKS |
|---|---|---|---|---|---|---|---|---|---|---|---|---|---|---|---|---|---|---|---|---|---|---|---|---|---|---|---|---|---|---|---|---|
| | AREA SERVED | CMS | | TOTAL | MOTOR | | UNIT NO. | ENT AIR (° C) | | LVG AIR (° C) | | FACE VEL (MAX) M/S | APD MAX (MM) | TOTAL CAPACITY KW | SENSIBLE CAPACITY KW | LATENT CAPACITY KW | CHILLED WATER/DIRECT EXPANSION | | | | | UNIT NO. | HTG. CAP. (KW) | AIR | | | HOT WATER | | | | | |
| | | MIN. O.A. | TOTAL | PA | W | RPS | | DB | WB | DB | WB | | | | | | L/S | EWT (° C) | LWT (° C) | PD (MM) | NUMBER OF ROWS | | | EAT (° C) | LAT (° C) | PD(MM) | ENT (° C) | LVG (° C) | L/S | PD(MM) | NUMBER OF ROWS | |
| AHU-1 | MP STATION | .944 | .944 | 848 | 2238 | 35.64 | CC-1 | 30.6 | 22.2 | 12.3 | 12.2 | 3.05 | 42.93 | 34.46 | 21.35 | 13.11 | 1.63 | 7.2 | 12.8 | 1768 | 10 | HC-1 | 33.70 | -9.4 | 20.0 | 5.34 | 93 | 82 | .764 | 153 | 2 | SEE NOTE 1, 2, 3 |
| AHU-2 | FRONT DESK, DETENTION CELLS | .118 | .552 | 393 | 745.7 | 23.77 | DXC-2 | 26.7 | 19.3 | 12.4 | 12.2 | 2.54 | 9.91 | 13.46 | 9.69 | 3.77 | .58 | 7.2 | 12.8 | 27.94 | 6 | HC-2 | 14.34 | 13.7 | 35.2 | 2.04 | 93 | 82 | .33 | 3.56 | 2 | SEE NOTE 1, 2, 4 |
| | | | | | | | | | | | | | | | | | | | | | | | | | | | | | | | | |

NOTE:

1- AHU - I SHALL HAVE DOUBLE WALL CASING FOR NOISE REDUCTION,
2- PROVIDE UNIT DISCONNECT SWITCH.
3- PERFORMANCE DATA IS BASED ON 35% PROPYLENE GLYCOL.
4- COOLING COIL SHALL BE A DIRECT EXPANSION COIL.

# AIR COOLED LIQUID CHILLER SCHEDULE

| UNIT NO. | CHILLER | | | | | | | COMPRESSOR | | | | CONDENSER | | | | | REMARKS |
|---|---|---|---|---|---|---|---|---|---|---|---|---|---|---|---|---|---|
| | KW (NOM.) @ 34.65°C AMBIENT AIR | L/S | TEMP (°C) | | PRESS DROP (MAX) (MM) | EER | INPUT KW/TON | NOM SIZE (KW) | VOLT/ PHASE | STEPS OF UNLOADING | NO. OF COMP. | NOM. SIZE (KW) | NO. OF COILS | CONDENSER FANS | | | |
| | | | IN | OUT | | | | | | | | | | NO. OF FANS | W | VOLT/ PHASE | |
| CH-1 | 123.4 | 5.31 | 12.6 | 7.1 | 2255 | 9.8 | 42.9/35.1 | 35.17 | 208/3 | 100-75-50-25 | 4 | 140.6 | 2 | 4 | 745.7 | 208/3 | SEE NOTES 1, 2, 3 |
| | | | | | | | | | | | | | | | | | |

NOTE:
1-PROVIDE REDUCED VOLTAGE STARTERS FOR EACH COMPRESSOR.
2-UNIT SHALL BE COMPATIBLE WITH AHU-1.
3-A FUNNEL AND VALVE SHALL BE PROVIDED AT THE SYSTEM HIGH POINT TO ADD 35% PROPLENE GLYCOL MIXTURE TO THE SYSTEM AS REQUIRED.

# BOILER SCHEDULE

| UNIT NO. | LOCATION | HOT WATER KG/MM2 | KW | | TEMP °C | | FIRING RATE | | | | FORCED DRAFT FAN W | REMARKS |
|---|---|---|---|---|---|---|---|---|---|---|---|---|
| | | | IBR GROSS OUTPUT | IBR NET RATING | | | OIL | | GAS | | | |
| | | | | | EWT | LWT | TYPE | L/M | TYPE | KW | | |
| B-1 | MECH RM 111 | .03 | 150.9 | 131.2 | 82 | 93 | — | — | NATURAL | 187.2 | — | SEE NOTES 1 |
| | | | | | | | | | | | | |

NOTE:
1-A FUNNEL AND VALVE SHALL BE PROVIDED AT THE SYSTEM HIGH POINT TO ADD 35% PROPYLENE GLYCOL MIXTURE TO THE SYSTEM AS REQUIRED.

# UNIT HEATER SCHEDULE

| UNIT NO. | LOCATION | KW | AIR DATA | | HOT WATER DATA | | | TYPE | W | REMARKS |
|---|---|---|---|---|---|---|---|---|---|---|
| | | | CMS | EAT °C | EWT°C | LWT°C | L/S | | | |
| UH-1 | RMS B04,B05,B10A, B13B,B13D,111,112,213 | 2.35/1.99 | .116/.099 | 15 | 93 | 82 | .051 | HORIZONTAL PROPELLER | 9 | SEE NOTES 1,2,3 |
| UH-2 | ATTIC | 7.26 | .274 | 15 | 93 | 82 | .158 | HORIZONTAL PROPELLER | 15.81 | SEE NOTES 1,2 |

NOTES:
1- UNIT SHALL BE THERMOSTATICALLY CONTROLLED.
2- PROVIDE LOCAL SAFETY DISCONNECT SWITCH.
3- PROVIDE VARIABLE SPEED CONTROLLER.

# DOMESTIC HOT WATER HEATER SCHEDULE

| UNIT NO. | STORAGE (L) | RECOVERY (LPH) | (KW) INPUT | TEMP RISE °C | FIRING RATE | | | | FORCED DRAFT FAN (W) | REMARKS |
|---|---|---|---|---|---|---|---|---|---|---|
| | | | | | OIL | | GAS | | | |
| | | | | | TYPE | LPM | TYPE | KW | | |
| DHW-1 | 284 | 572 | 47 | 56 | — | — | NATURAL | — | — | — |
| | | | | | | | | | | |

# EXHAUST/RELIEF FAN SCHEDULE

| UNIT NO. | LOCATION | AREA SERVED | CMS | Pa | ROOF/ WALL OPENING | RPS | DRIVE | WATTS | TYPE | REMARKS |
|---|---|---|---|---|---|---|---|---|---|---|
| EF-1 | UPS BATT. RM B04 | UPS BATT. RM B04 | .080 | 62.30 | — | 25.84 | DIRECT | 24.61 | CENTRIFUGAL IN-LINE | SEE NOTES 1,2,4,5,6 |
| EF-2 | CORRIDOR RM 215 | RM B05,111,213 | .071 | 93.24 | — | 21.67 | | 37.29 | | SEE NOTES 1,4,5,6 |
| EF-3 | ABOVE ARMS VAULT (1ST FL) | RM 115,116 | .118 | 124.32 | — | 25.84 | | 61.90 | | SEE NOTES 1,2,5,6,7 |
| EF-4 | ABOVE ARMS VAULT (1ST FL) | RMS B10A,B10B,B10C,B12, B13B,B13C,B13D,B14 | .406 | 155.40 | — | 28.76 | BELT | 559.28 | | SEE NOTES 1,2,3,5,6 |
| EF-5 | ATTIC | RM 102,103,204,205,206 | .189 | 124.32 | — | 28.76 | | 186.43 | | SEE NOTES 1,3,5,6 |
| EF-6 | ATTIC | EMR RM B02 VIA ELEVATOR SHAFT | .125 | 93.24 | — | 28.76 | | 186.43 | | SEE NOTES 1,3,5,6 |
| EF-7 | ATTIC | ATTIC | 3.77 | 93.24 | 965 | 28.76 | | 745.7 | PROPELLER | SEE NOTES 1,4,5,6 |
| SF-1 | MECH RM 112 | MECH RM 112 | .425 | 93.24 | 815 | 28.76 | | 186.43 | PROPELLER | SEE NOTES 1,2,4,5,6 |
| | | | | | | | | | | |
| | | | | | | | | | | |

NOTES:
1- PROVIDE SAFETY DISCONNECT SWITCH.
2- INTERLOCK WITH EXHAUST MOTORIZED DAMPER.
3- EF-4,5,6 SHALL BE INTERLOCKED WITH AHU-1.
4- HOA THERMOSTATICALLY CONTROLLED.
5- FOR ELECTRICAL CHARACTERISTICS, SEE ELECTRICAL DRAWINGS.
6- PROVIDE STARTERS INTEGRAL WITH UNIT.
7- EF-3 SHALL BE INTERLOCKED WITH AHU-2.

# PUMP SCHEDULE

| UNIT NO. | LOCATION | SYSTEM SERVED | L/S | TDH MM | DESIGN PRESSURE KG/MM² | TEMP °C | | W | TYPE | REMARKS |
|---|---|---|---|---|---|---|---|---|---|---|
| | | | | | | MIN | MAX | | | |
| HWP-1 | MECH RM 111 | HEATING | 5.7 | 12192 | .12 | 4.4 | 104.4 | 2237 | CENTRIFUGAL | NOTES 1, 4 |
| HWP-2 | MECH RM 111 | HEATING | 5.7 | 12192 | .12 | 4.4 | 104.4 | 2237 | CENTRIFUGAL | NOTES 1, 4 |
| CHWP-1 | MECH RM 111 | COOLING | 5.99 | 15240 | .12 | 4.4 | 104.4 | 2238 | CENTRIFUGAL | NOTES 2, 3, 4 |
| CHWP-2 | MECH RM 111 | COOLING | 5.99 | 15240 | .12 | 4.4 | 104.4 | 2238 | CENTRIFUGAL | NOTES 2, 3, 4 |
| DHWCP-1 | MECH RM 111 | DOMESTIC HOT WATER | .32 | 5180 | .12 | 4.4 | 104.4 | 124 | CENTRIFUGAL | NOTES 1,4 |
| SEP-1 | PUMP RM B14 | SANITARY SEWER | 2.90 | 9145 | — | — | — | 1492 | GRINDER PUMP | |
| | | | | | | | | | | |

NOTE:
1. IN-LINE CENTRIFUGAL
2. CENTRIFUGAL, END SUCTION, BASE MOUNTED
3. PUMPS PIPED IN PARALLEL.
4. PROVIDE A LOCAL DISCONNECT SAFETY SWITCH AND A SET OF ISOLATION VALVES FOR EACH PUMP FOR MAINTENANCE.

US Army Corps of Engineers
New York District

| Symbol | Description | Date | AOR |
|---|---|---|---|

Designed by: | Date: | Size | Rev.
Dwn by: | Ckd by: | Drawing file no.:
Reviewed by: | Drawing code:
Submitted by: | Plot date: 05-JAN-2005 16:31 | Plot scale: 1 | Sheet size: ASB22011000000
File name: S:\Mission\Military\Fort Hamilton\Bldg\Mechanical\Bldg 14-002.dgn

U.S. ARMY ENGINEER DISTRICT
CONTRACT DOCUMENTS
NEW YORK, NEW YORK

PN: 8022A
MILITARY POLICE STATION
FORT HAMILTON, NY

MECHANICAL SCHEDULES – 2

Sheet reference number:
M–601

Submitted by: eSendFab
Software:Bentley:Microstation:V8 Plot Date: 05-JAN-2005 16:31
Sat Nov-06-2004 11:07:07 Hamilton:eMPS:Contracts:Contract:M601.dgn

## FIN TUBE RADIATOR SCHEDULE

| UNIT NO. | EWT (o C) | LWT (o C) | PIPE TYPE | PIPE SIZE (mm) | FINS TYPE | FINS SIZE (mm) | FINS PER LIN. M. | WATTS/ PER MM | LENGTH (mm) | ROW | TOTAL WATTS | LITERS PER SECOND | ENCLOSURE TYPE | REMARKS |
|---|---|---|---|---|---|---|---|---|---|---|---|---|---|---|
| FT-1 | 93.3 | 82.2 | STEEL | 25 | STEEL | 70 x 95 | 131 | .603 | 610 | 1 | 367 | .063 | SLOPING TOP | W/MANUAL DAMPER |
| FT-2 | | | | 25 | | 70 x 95 | | .603 | 915 | | 551 | | SLOPING TOP | W/MANUAL DAMPER |
| FT-3 | | | | 32 | | 57 x 125 | | .662 | 610 | | 403 | | SLOPING TOP | W/MANUAL DAMPER |
| FT-4 | | | | 32 | | 57 x 125 | | .662 | 305 | | 201 | | SLOPING TOP | W/MANUAL DAMPER |
| | | | | | | | | | | | | | | |

NOTES:
1- ALL FIN-TUBE RADIATORS SHALL BE PROVIDED WITH NON-ELECTRIC THERMOSTATICALLY CONTROLLED SUPPLY VALVES TO MAINTAIN ROOM TEMPERATURE AT 20 DEGREES CELSIUS.
2- BOTTOM OF FIN TUBE ENCLOSURE SHALL BE MOUNTED 150 MM ABOVE FINISHED FLOOR.

## CABINET UNIT HEATER SCHEDULE

| UNIT NO. | LOCATION | KW | AIR DATA CMS | AIR DATA EAT °C | HOT WATER DATA EWT °C | HOT WATER DATA LWT °C | HOT WATER DATA L/S | REMARKS |
|---|---|---|---|---|---|---|---|---|
| CUH-1 | STAIRCASE, VESTIBULE | 3.75 | .109 | 15 | 93 | 82 | .032 | SEE NOTE 1 |
| | | | | | | | | |

NOTE:
1- UNIT SHALL BE FULLY RECESSED TYPE.

## DEHUMIDIFIER SCHEDULE

| UNIT NO. | LOCATION | REMOVAL CAPACITY LITERS/DAY | MOTOR W | VOLTAGE | AMPS | WATTS AT MAX. OUTPUT | REMARKS |
|---|---|---|---|---|---|---|---|
| DHU-1 | ARMS VAULT RM 113 | 7.09 | 248.3 | 115 | 4 | 520 | SEE NOTE 1,2 |
| | | | | | | | |

NOTE:
1- UNIT SHALL HAVE AN NEMA 7 ENCLOSURE COMPLETE WITH CIRCUIT BREAKER, MOTOR CONTRACTORS, CONTROL TRANSFORMER, INTRINSICALLY SAFE SWITCHING UNIT, SELECTOR SWITCH AND LIGHT.
2- PROVIDE EXTENSION DRAIN LINE TO FLOOR DRAIN.

## DIRECT EXPANSION UNIT SCHEDULE

| UNIT NO. | NOMINAL SIZE (KW) | NO. OF FANS | W /FAN | MOTOR SPEED RPS | REMARKS |
|---|---|---|---|---|---|
| DX-1 | 14.06 | 1 | 186.5 | 18.76 | SEE NOTE 1,2 |
| DX-2 | 17.59 | 1 | 186.5 | 13.76 | SEE NOTE 3 |

NOTE:

1. DX-1 SHALL BE COMPATIBLE WITH DXC-2.
2. UNIT SHALL BE PROVIDED WITH A LOW-AMBIENT PRESSURE SWITCH, CRANKCASE HEATER, EVAPORATOR FREEZE THERMOSTAT, COMPRESSOR START ASSIST-CAPACITOR AND RELAY AND A LIQUID LINE SOLENOID VALVE.
3. DX-2 SHALL BE COMPATIBLE WITH FCU-8 AND FCU-9.

## AIR SEPARATOR SCHEDULE

| UNIT NO. | SYSTEM SERVED | MIN. CAP L/S | DIMENSION MM (DIA. x H) | OUTLET/INLET SIZE/CLASS MM | INLET/OUTLET FACE-FACE DIM. MM | APPR. WT KG | REMARKS |
|---|---|---|---|---|---|---|---|
| AS-1 | HEATING | 5.67 | 212x441 | 65/65 | 65 | 40.8 | SEE NOTE 1 |
| AS-2 | COOLING | 5.99 | 273x652 | 80/80 | 80 | 43 | SEE NOTE 1 |
| | | | | | | | |

NOTES
1- ASME WITH STRAINER

## EXPANSION TANK SCHEDULE

| UNIT NO. | SYSTEM SERVED | CAPACITY L | DIMENSION MM (DIA.x H) | PRESSURE KG/MM2 MAXIMUM WORKING | PRESSURE KG/MM2 FACTORY AIR CHARGE | CODE STAMP | REMARKS |
|---|---|---|---|---|---|---|---|
| ET-1 | HOT WATER HEATING SYSTEM | 121.1 | 390x1184 | .087 | .008 | ASME | — |
| ET-2 | COOLING SYSTEM | 121.1 | 390x1184 | .087 | .008 | ASME | — |

## PLUMBING FIXTURE SCHEDULE

| FIXTURE NO. | DESCRIPTION | CONNECTIONS MM WASTE | VENT | DCW | DHW | REMARKS |
|---|---|---|---|---|---|---|
| P-1 | WATER CLOSET | 100 | 50 | 25 | — | |
| P-2 | WATER CLOSET, HAND. | 100 | 50 | 25 | — | |
| P-3 | URINAL | 50 | 50 | 20 | — | |
| P-5 | LAVATORY | 40 | 40 | 15 | 15 | |
| P-6 | WHEEL CHAIR LAV, HAND. | 40 | 40 | 15 | 15 | |
| P-7 | KITCHEN SINK UNIT | 50 | 40 | 15 | 15 | PRE-FAB UNIT SEE NOTE 1 |
| P-8 | SERVICE SINK | 50 | 40 | 20 | 20 | |
| P-9 | LAVATORY/TOILET COMB. | 40/100 | 50 | 15/25 | 15/- | SEE NOTE 3 |
| P-13 | SHOWER | 50 | 40 | 15 | 15 | PRE-FAB UNIT SEE NOTE 2 |
| P-15 | ELECTRIC WATER COOLER | 40 | 40 | 15 | — | |
| P-15A | ELECTRIC WATER COOLER | 40 | 40 | 15 | — | HANDICAPPED |
| | | | | | | |

NOTES:
1. SEE ARCH. SPECS. AND DRAWINGS.
2. SEE ARCH. SPECS. FOR SHOWER DESCRIPTION.
3. SEE SPECS. AND DRAWING P-101.

US Army Corps of Engineers
New York District

Symbol | Description | Date | KOD

Designed by | Date | Size | Rev.
Dwn by | Ckd by | Drawing file no.:
Reviewed by | Drawing code:
Submitted by | Plot date: 05-JAN-2005 16:31 | Plot by: eadwb | Scale: 0.0282317.00000

U.S. ARMY ENGINEER DISTRICT
NEW YORK, NEW YORK

File name: S:\Renovation\Military\Fort Hamilton\MPRA\Mechanical\MPRA M-602.dgn

PN: 82228
MILITARY POLICE STATION
FORT HAMILTON, NY

MECHANICAL SCHEDULES – 3

Sheet reference number:
M–602

Submitted by: eadwb
S:\Fortmcnamara\Fort Hamilton\MPS\Mechanical\MPRA M-602.dgn
Plot Date: 05-JAN-2005 16:31

W-X-Y-Z
••

DEVICE SYMBOL, GENERIC
USED TO REPRESENT SENSORS, INSTRUMENTS
SAFETIES, AND OTHER CONTROL DEVICES
W-X-Y-Z : (SEE ABBREVIATIONS AND ACRONYMS)
GENERIC USAGE TO SHOW LOCATION OF DEVICE; PROCESS OR DEVICE BEING MEASURED OR CONTROLLED; SIGNAL TYPE; MODIFIERS AND OTHER APPLICATION INFORMATION

W-X-Y-Z
••

DEVICE SYMBOL, GENERIC
MULTIPLE OUTPUT DEVICE WHERE AT LEAST 1 OUTPUT IS ALWAYS SAFETY INTERLOCK

W-X-Y-Z
DDC
••
DIR
REV

DEVICE SYMBOL, CONTROLLER
DDC : DIRECT DIGITAL CONTROL
•• : DEVICE NUMBER
DIR : DIRECT CONTROL ACTION, OR
REV : REVERSE CONTROL ACTION
W-X-Y-Z : (SEE ABBREVIATIONS AND ACRONYMS)
GENERIC USAGE TO SHOW LOCATION OF DEVICE; PROCESS OR DEVICE BEING MEASURED OR CONTROLLED; SIGNAL TYPE; MODIFIERS AND OTHER APPLICATION INFORMATION

ACTUATOR, ELECTRIC

P
ACTUATOR, PNEUMATIC
WITH LOCALLY MOUNTED
PRESSURE GAGE

P
PP
M
ACTUATOR, PNEUMATIC
WITH POSITIVE POSITIONER
AND LOCALLY MOUNTED
PRESSURE GAGE

AFMA
AIR FLOW MEASUREMENT ARRAY,
WITH FLOW TRANSMITTER
SEE 'DEVICE SYMBOL, GENERIC'

BOILER

CHILLER

C
COIL, COOLING

DX
COIL, COOLING, DIRECT-EXPANSION

HC
COIL, HEAT/COOL (DUAL TEMPERATURE)

H
COIL, HEATING

PC
COIL, PRECOOL

PH
COIL, PREHEAT

CONTACT, PRESSURE, HIGH LIMIT (HL)
SHOWN IN ACTIVATED POSITION
OPEN WHEN PRESSURE IS ABOVE SETPOINT
CLOSED WHEN PRESSURE IS BELOW SETPOINT

CONTACT, PRESSURE, HIGH LIMIT (HL)
SHOWN IN UNACTIVATED POSITION
OPEN WHEN PRESSURE IS ABOVE SETPOINT
CLOSED WHEN PRESSURE IS BELOW SETPOINT

CONTACT, PRESSURE, LOW LIMIT (LL)
SHOWN IN ACTIVATED POSITION
OPEN WHEN PRESSURE IS BELOW SETPOINT
CLOSED WHEN PRESSURE IS ABOVE SETPOINT

CONTACT, PRESSURE, LOW LIMIT (LL)
SHOWN IN UNACTIVATED POSITION
OPEN WHEN PRESSURE IS BELOW SETPOINT
CLOSED WHEN PRESSURE IS ABOVE SETPOINT

CONTACT, TEMPERATURE, HIGH LIMIT (HL)
SHOWN IN ACTIVATED POSITION
OPEN WHEN TEMPERATURE IS ABOVE SETPOINT
CLOSED WHEN TEMPERATURE IS BELOW SETPOINT

CONTACT, TEMPERATURE, HIGH LIMIT (HL)
SHOWN IN UNACTIVATED POSITION
OPEN WHEN TEMPERATURE IS ABOVE SETPOINT

CONTACT, TEMPERATURE, LOW LIMIT (LL)
SHOWN IN ACTIVATED POSITION
OPEN WHEN TEMPERATURE IS BELOW SETPOINT
CLOSED WHEN TEMPERATURE IS ABOVE SETPOINT

CONTACT, TEMPERATURE, LOW LIMIT (LL)
SHOWN IN UNACTIVATED POSITION
OPEN WHEN TEMPERATURE IS BELOW SETPOINT
CLOSED WHEN TEMPERATURE IS ABOVE SETPOINT

CONTROL SIGNAL LINE, LOW VOLTAGE

CURRENT TRANSFORMER/SWITCH

DAMPER, BALANCING

D-••
DAMPER, PARALLEL BLADE
NORMALLY OPEN OR CLOSED AS SHOWN
•• - DAMPER NUMBER AS SHOWN
IN DAMPER SCHEDULE

D-••
DAMPER, OPPOSED BLADE
NORMALLY OPEN OR CLOSED AS SHOWN
•• - DAMPER NUMBER AS SHOWN
IN DAMPER SCHEDULE

HEAT EXCHANGER

MAIN AIR
MAIN AIR

M•
MOTOR

MS-•
MOTOR STARTER

RXX
RELAY COIL
XX - SEQUENTIAL RELAY (SOLENOID) NUMBER

RXX-YY
RELAY COIL CONTACT
NORMALLY OPEN
XX - RELAY COIL NUMBER
YY - CONTACT NUMBER

RXX-YY
RELAY COIL CONTACT
NORMALLY CLOSED
XX - RELAY COIL NUMBER
YY - CONTACT NUMBER

EPS
••
ELECTRIC-TO-PNEUMATIC SWITCH
(SOLENOID ACTUATED PNEUMATIC VALVE)
•• - SEQUENTIAL NUMBER
(WHEN MORE THAN 1 EPS)

EP
••
ELECTRIC-TO-PNEUMATIC TRANSDUCER
VDC OR MA INPUT / 3-15 PSI OUTPUT
•• - SEQUENTIAL NUMBER
(WHEN MORE THAN 1 EP)

FAN

FILTER

LDP
••
LOCAL DISPLAY PANEL
•• - SEQUENTIAL NUMBER
(WHEN MORE THAN 1 LDP)

PP
POSITIVE POSITIONER
SEE 'ACTUATOR, PNEUMATIC'

P
PRESSURE GAGE

P
H
L
PRESSURE SWITCH, DIFFERENTIAL, WITH GAGE
H - HIGH PRESSURE TAP
L - LOW PRESSURE TAP
SEE 'DEVICE SYMBOL, GENERIC'

PUMP

RADIATOR

RST-BUT
RESET BUTTON FOR SAFETY RESET

SMOKE DETECTOR, DUCT-MOUNTED
SEE 'DEVICE SYMBOL, GENERIC'

SWITCH, MANUAL

T
TEMPERATURE GAGE

TEMPERATURE SENSOR, AVERAGING
OR TEMPERATURE LOW LIMIT / FREEZESTAT
SEE 'DEVICE SYMBOL, GENERIC'

TEMPERATURE SENSOR, POINT
SEE 'DEVICE SYMBOL, GENERIC'

STAT
THERMOSTAT WITH SPECIFIED I/O FUNCTIONS

THERMOWELL IN PIPE

VALVE, BALANCING

V-••
NC
VALVE, NORMALLY CLOSED
WITH SPRING RETURN FAILSAFE
•• - VALVE NUMBER AS SHOWN
IN VALVE SCHEDULE

V-••
NO
VALVE, NORMALLY OPEN
WITH SPRING RETURN FAILSAFE
•• - VALVE NUMBER AS SHOWN
IN VALVE SCHEDULE

V-••
COM
NO
NC
VALVE, 3-WAY DIVERTING
WITH SPRING RETURN FAILSAFE
NO - NORMALLY OPEN
NC - NORMALLY CLOSED
COM - COMMON PORT
•• - VALVE NUMBER AS SHOWN
IN VALVE SCHEDULE

V-••
NO
COM
NC
VALVE, 3-WAY MIXING
WITH SPRING RETURN FAILSAFE
NO - NORMALLY OPEN
NC - NORMALLY CLOSED
COM - COMMON PORT
•• - VALVE NUMBER AS SHOWN
IN VALVE SCHEDULE

VFD
XX-C
XX-SS
XX-S
VARIABLE FREQUENCY DRIVE
XX - PROCESS/DEVICE BEING CONTROLLED

SS - START/STOP COMMAND
S - STATUS FEEDBACK (ON/OFF)
C - 4-20 MA, VDC, OR SNVT CONTROL SIGNAL

## CONTROL SCHEMATIC SYMBOLS

B
BINARY HARDWARE INPUT

A
ANALOG HARDWARE INPUT

B
BINARY HARDWARE OUTPUT

A
ANALOG HARDWARE OUTPUT

ANALOG OR BINARY SIGNAL INPUT

ANALOG OR BINARY SIGNAL OUTPUT

CONSTANT VALUE

IF___
CONDITIONAL STATEMENT

IN
IN
MATH
OUT
GENERIC MATH FUNCTION AS DEFINED

IN
IN
MIN
OUT
MINIMUM SIGNAL SELECTOR

IN
IN
MAX
OUT
MAXIMUM SIGNAL SELECTOR

IN
IN
PLUS
OUT
ADDITION FUNCTION

IN
IN
MINUS
OUT
SUBTRACTION FUNCTION

IN
RESET
OUT
RESET SCHEDULE
(OUTPUT INCREASES
AS INPUT INCREASES)

IN
RESET
OUT
RESET SCHEDULE (OUTPUT
DECREASES AS INPUT
INCREASES)

IN
OUT
LOGICAL NOT FUNCTION

IN
IN
OUT
LOGICAL OR FUNCTION

IN
IN
OUT
LOGICAL AND FUNCTION

IN1
IN2
COMP
DB
OUT
DB-___
COMPARATOR WITH
DEADBAND (DB).
WHEN IN1>IN2
OUTPUT IS TRUE

IN
IN
S
LAT
R
B OUT
BINARY LATCH
S-SET
R-RESET

IN
HAND
OFF
OUT
H-O-A SWITCH

IN
OCC
UNOCC
OUT
H-O-A SWITCH

CONTROL
IN
NO
IN
NC
OUT
COM
SWITCH

IN
T-___ SEC
OUT
ON DELAY TIMER
OUT-IN AFTER
TIME DELAY

ENABLE
IN
VALUE
IN
SETPOINT
PID
OUT
DEFAULT OUTPUT
PID LOOP WITH
ENABLE AND
DEFAULT
OUTPUT
WHEN NOT
ENABLED

## CONTROL LOGIC DIAGRAM SYMBOLS

| | | | |
|---|---|---|---|
| 2P | TWO-POSITION (CONTROL SIGNAL) | I/O | INPUT/OUTPUT |
| ADJ | ADJUSTABLE | LDP | LOCAL DISPLAY PANEL |
| AFMA | AIRFLOW MEASUREMENT ARRAY | LL | LOW LIMIT |
| ALM | ALARM | MA | MIXED AIR |
| BA | BYPASS AIR | MCP | MAIN CONTROL PANEL |
| BLDG | BUILDING | MINOA | MINIMUM OUTSIDE AIR |
| BUT | BUTTON | MS | MOTOR STARTER |
| C | COMMAND (MODULATING CONTROL SIGNAL) | N/A | NOT APPLICABLE |
| CD | COLD DECK | NC | NORMALLY CLOSED |
| CHLR | CHILLER | NO | NORMALLY OPEN |
| CLG | COOLING | OA | OUTSIDE AIR |
| CO2 | CARBON DIOXIDE | OCC | OCCUPIED |
| COM | COMMON | ODT | ON DELAY TIMER |
| COMP | COMPARATOR | OWS | OPERATOR WORKSTATION |
| CR | CONDENSER WATER RETURN | P | PRESSURE |
| CS | CONDENSER WATER SUPPLY | PC | PRE-COOLING |
| CT | CURRENT TRANSFORMER/SWITCH | PCW | PRIMARY CHILLER WATER |
| CWR | CHILLED WATER RETURN | PCWR | PRIMARY CHILLER WATER RETURN |
| CWS | CHILLED WATER SUPPLY | PCWS | PRIMARY CHILLER WATER SUPPLY |
| CW | CHILLED WATER | PH | PREHEAT |
| D | DAMPER | PMP | PUMP |
| DA | DISCHARGE AIR | PP | POSITIVE POSITIONER |
| DB | DEADBAND | R | RELAY |
| DDC | DIRECT DIGITAL CONTROL(LER) | RA | RETURN AIR |
| DIFF | DIFFERENCE | REV | REVERSE (CONTROL ACTION) |
| DIR | DIRECT (CONTROL ACTION) | RF | RETURN FAN |
| DIS | DISABLE | RH | RELATIVE HUMIDITY |
| DT | DUAL TEMP | RLA | RELIEF AIR |
| DTWR | DUAL TEMP WATER RETURN | RM | ROOM |
| DTWS | DUAL TEMP WATER SUPPLY | RST | RESET |
| DX | DIRECT EXPANSION (UNIT) | S | STATUS |
| EA | EXHAUST AIR | SA | SUPPLY AIR |
| ECO | ECONOMIZER | SEC | SECONDARY |
| EF | EXHAUST FAN | SF | SUPPLY FAN |
| ENA | ENABLE | SMK | SMOKE |
| EP | ELECTRIC TO PNEUMATIC TRANSDUCER | SP | SETPOINT |
| EPS | ELECTRIC TO PNEUMATIC SWITCH | SS | START/STOP COMMAND |
| F | FLOW | STAT | THERMOSTAT |
| FAP | FIRE ALARM PANEL | SYS | SYSTEM |
| FLT | FILTER | SCHD | SCHEDULER |
| HD | HOT DECK | T | TEMPERATURE |
| HL | HIGH LIMIT | TAP | TAP, PRESSURE |
| HTG | HEATING | UNOCC | UNOCCUPIED |
| HTHW | HIGH TEMPERATURE HOT WATER | V | VALVE |
| HUM | HUMIDIFIER | VAV | VARIABLE AIR VOLUME |
| HW | HOT WATER | VFD | VARIABLE FREQUENCY DRIVE |
| HWR | HOT WATER RETURN | WB | WET BULB (TEMPERATURE) |
| HWS | HOT WATER SUPPLY | ZN | ZONE |
| HX | HEAT EXCHANGER | | |

## ABBREVIATIONS AND ACRONYMS

NOTE: ALL DIMENSIONS SHOWN ARE IN MILLIMETERS.

US Army Corps of Engineers
New York District

| Rev | Date | Description | APPD |
|---|---|---|---|

Designed by: | Date: | Size | Rev.
Dwn by: | Ckd by: | Drawing file no.:
Reviewed by: | Drawing code:
Submitted by: | Plot date: 05-JAN-2005 16:31 | Plot by: eSenefsk | Scale: 0.0000231490000
File name: S:\Resources\Military\Fort Hamilton\MPlan\Mechanical\Hvac_la-700.dgn

U.S. ARMY ENGINEER DISTRICT
CORPS OF ENGINEERS
NEW YORK, NEW YORK

MILITARY PUBLIC SERVICE STATION
FORT HAMILTON, NY
Pn. 82224

# HVAC CONTROLS LEGEND

Sheet reference number:
M–700

Submitted by: eSenefsk
Architect-Engineer firm: HamiltonMPS\Standard\Contract\MPlan\la-700.dgn
Plot Date: 05-JAN-2005 16:31

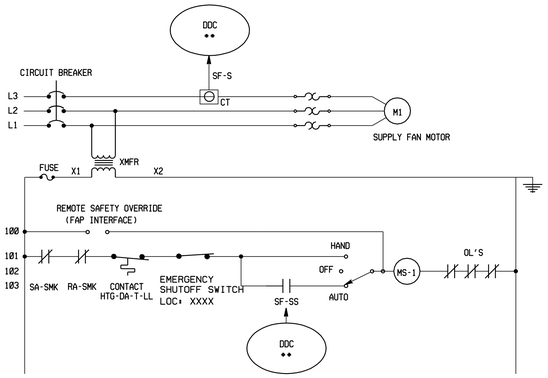


LADDER DIAGRAM

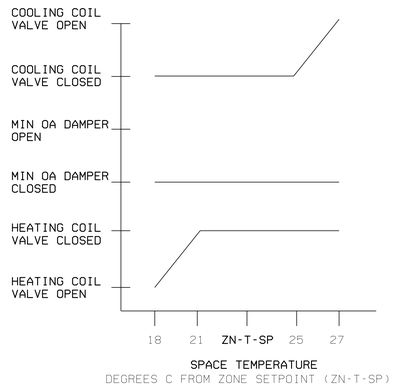


WARMUP/COOLDOWN

## THERMOSTAT AND OCCUPANCY SENSOR SCHEDULE

| SYSTEM SERVICE (AHU) | TERMINAL UNIT IDENTIFIER | SPACES SERVED | STAT LOCATION | ZN-T-SP ADJUST | UNOCC OVERRIDE PUSHBUTTON | UNOCC OVERRIDE TIME | OCC SENSOR | OTHER |
|---|---|---|---|---|---|---|---|---|
| AHU-1 | N/A | SEE DRAWINGS | RM 124 | 20 °C (HEATING)<br>25.6 °C (COOLING) | ——— | ——— | ——— | |

## CONTROL VALVE SCHEDULE

| SYSTEM | IDENTIFIER | LOCATION | FUNCTION | TYPE | RANGE | KV ((M^3)/HR) | CLOSE-OFF RATING (OR TORQUE) | REMARKS |
|---|---|---|---|---|---|---|---|---|
| AHU-1 | V-1 | ATTIC | HEATING COIL VALVE | 3-WAY, MODULATING WITH SPRING RETURN | | [___] | [___] N M | |
| AHU-1 | V-2 | ATTIC | COOLING COIL VALVE | 3-WAY, MODULATING WITH SPRING RETURN | | [___] | [___] N M | |
| | | | | | | | | |

NOTE: KV = 0.857 * CV

## CONTROL DAMPER SCHEDULE

| SYSTEM | IDENTIFIER | LOCATION | FUNCTION | TYPE | SIZE | RANGE | REMARKS |
|---|---|---|---|---|---|---|---|
| AHU-1 | D-1 | ATTIC | MINIMUM OUTSIDE AIR | TWO-POSITION WITH SPRING RETURN | W X H (MM) | | PARALLEL BLADE |

## OCCUPANCY SCHEDULE

| SYSTEM SCHEDULE | | | | |
|---|---|---|---|---|
| SYSTEM | OCCUPIED | UNOCCUPIED | WARM-UP | |
| AHU-1 | M-F 0900-1700 | NIGHTSETBACK | M-F 0800-0900 | |

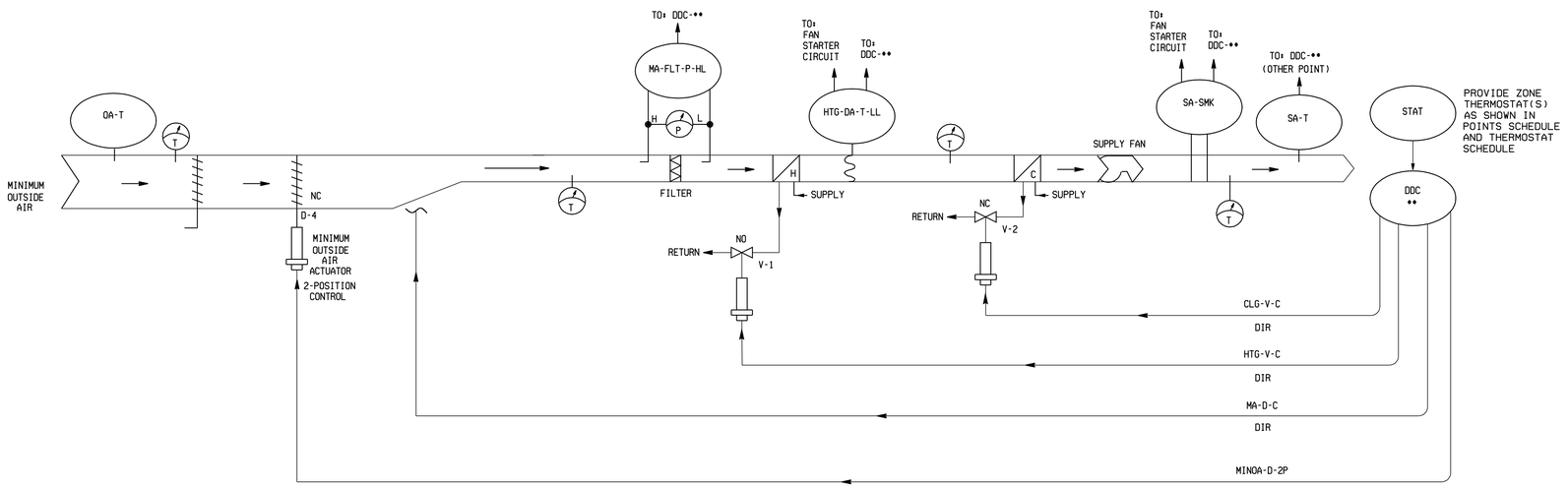


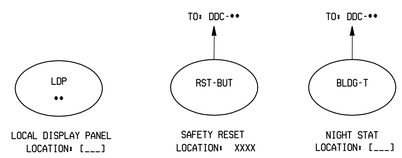


NOTE 1: CONTRACTOR SHALL AFFIX PERMANENT TAGS/LABELS TO ALL DEVICES AS SPECIFIED
NOTE 2: CONTRACTOR SHALL LABEL ALL DDC I/O SIGNAL LINES: 4-20 MA, VDC, OR SNVT
NOTE 3: CONTRACTOR SHALL SHOW A UNIQUE IDENTIFIER FOR EACH DEVICE. WERE MULTIPLE IDENTICAL DEVICES ARE SHOWN (FOR EXAMPLE: DDC CONTROLLER, OA SENSOR, OR EP TRANSDUCER) EACH SHALL BE SEQUENTIALLY NUMBERED. WHERE SEPERATE DDC CONTROLLER BUBBLES ARE USED TO REPRESENT/SHOW A COMMON (OR SINGLE) CONTROLLER EACH BUBBLE SHALL USE THE SAME IDENTIFIER AND NUMBER. DEVICE AND SIGNAL IDENTIFIERS SHALL BE CONSISTENT BETWEEN DRAWINGS.
NOTE 4: CONTRACTOR SHALL UNIQUELY NUMBER ALL ANSI 709.1 DEVICES. THIS NUMBERING SHALL BE CONSISTENT BETWEEN ALL DRAWINGS

CONTROL SYSTEM SCHEMATIC

NOTE: ALL DIMENSIONS SHOWN ARE IN MILLIMETERS.

US Army Corps of Engineers
New York District

| Symbol | Description | Date | Appr |
|---|---|---|---|

U.S. ARMY ENGINEER DISTRICT
CORPS OF ENGINEERS
NEW YORK, NEW YORK

Designed by: | Date: | Size: | Rev:
Dwn by: | Ckd by: | Drawing file no.:
Reviewed by: | Drawing code:
Submitted by: | Plot date: 05-JAN-2005 16:31 | Plot by: eJendheb | Scale: 0.0283021100000

File name: S:\Division\Military\Fort Hamilton\MPS\Mechanical\MPS\ M-701.dgn

Pn: E2024
MILITARY POLICE STATION
FORT HAMILTON, NY

HVAC CONTROLS
AHU-1 SCHEMATIC &
LADDER DIAGRAM

Sheet reference number:
M–701

Plot Date: 05-JAN-2005 16:31
S:\Office\eamilitary\pfd1 \Hamilton\MPS\Labels\controlsAHU1a.k Plotted by:

Submitted by: eJendheb
S:\Office\eamilitary\pfd1 \Hamilton\MPS\Labels\controlsAHU1a.k

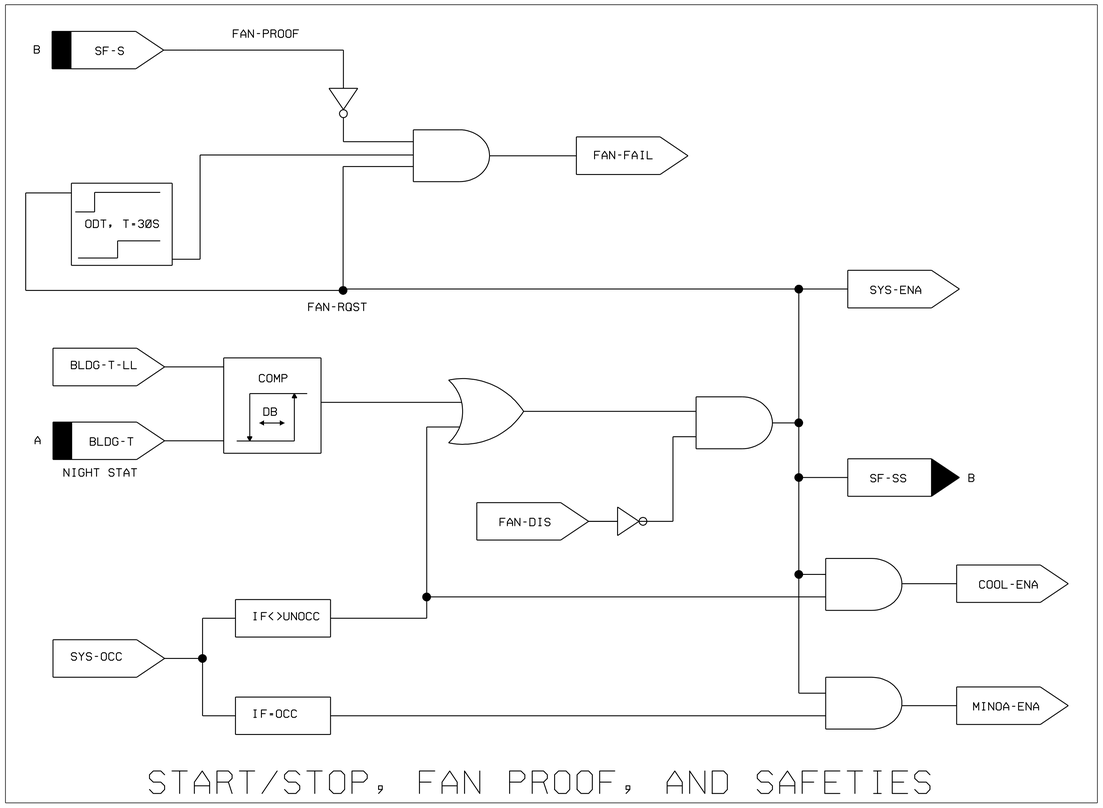


START/STOP, FAN PROOF, AND SAFETIES

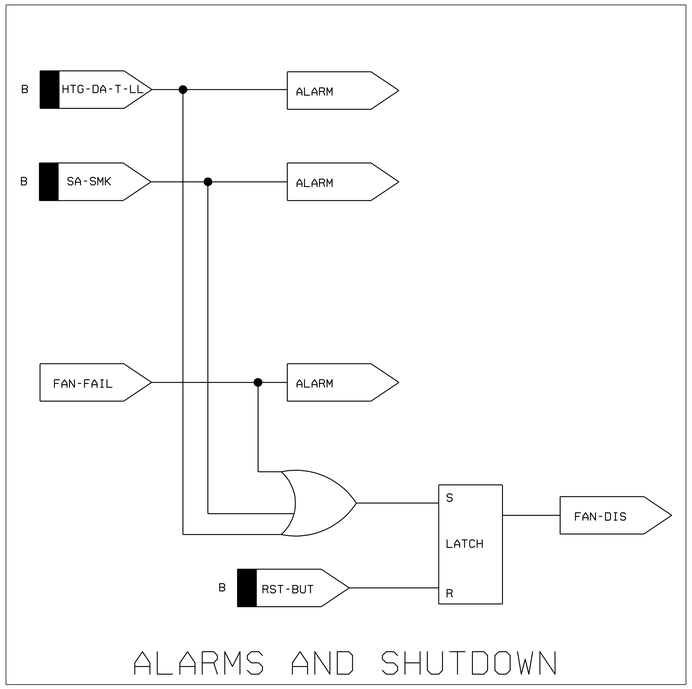


ALARMS AND SHUTDOWN

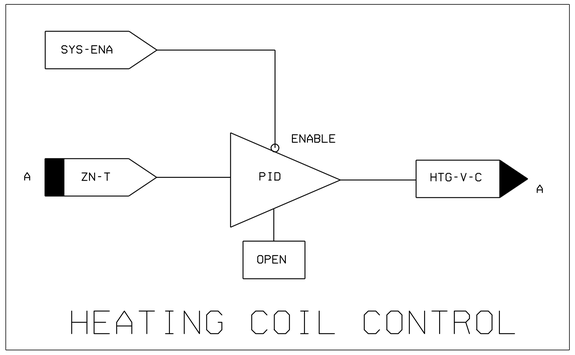


HEATING COIL CONTROL

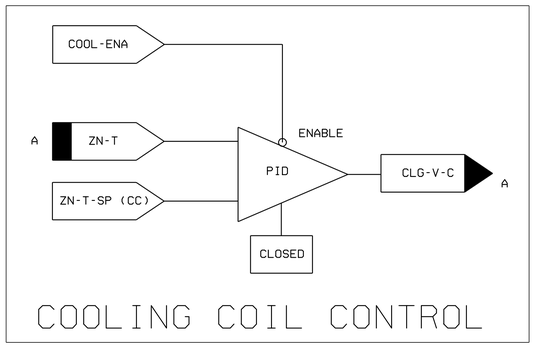


COOLING COIL CONTROL

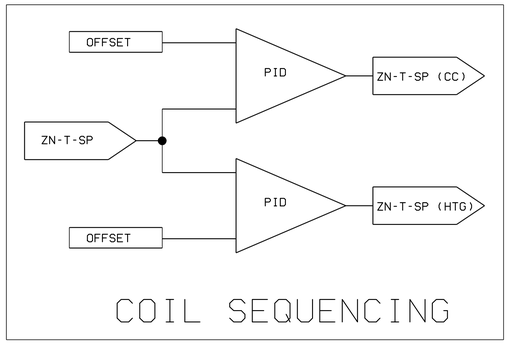


COIL SEQUENCING

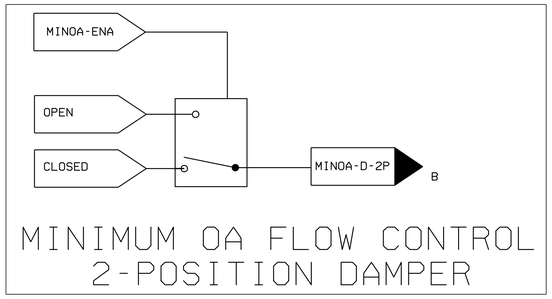


MINIMUM OA FLOW CONTROL
2-POSITION DAMPER

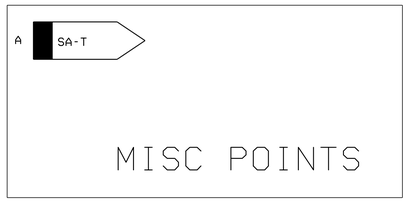


MISC POINTS

CONTROL LOGIC DIAGRAMS

NOTE: ALL DIMENSIONS SHOWN ARE IN MILLIMETERS.

US Army Corps of Engineers
New York District

| Symbol | Description | Date | Appr |
|---|---|---|---|

U.S. ARMY ENGINEER DISTRICT
CORPS OF ENGINEERS
NEW YORK, NEW YORK

Designed by: | Date: | Size | Rev.
Dwn by: | Ckd by: | Drawing file no.:
Reviewed by: | Drawing code:
Submitted by: | Plot date: 05-JAN-2005 16:31 | Plot by: eblandwb | Scale: 0.0000011000000

File name: S:\Division\military\fort hamilton\dPrfbg\Mechanical\AHUs, lab-702.dgn

P.N. 82224
MILITARY POLICE STATION
FORT HAMILTON, NY

HVAC CONTROLS
AHU-1 CONTROL LOGIC DIAGRAMS

Sheet reference number:
M–702

Submitted by: eblandwb
Plot Date: 05-JAN-2005 16:31
Plot Scale: 0.0000011000000
Plot Driver: pdf
Workstation: WS0110ne
MPD:\Projects\Hamilton\AHUs\M-702.dgn

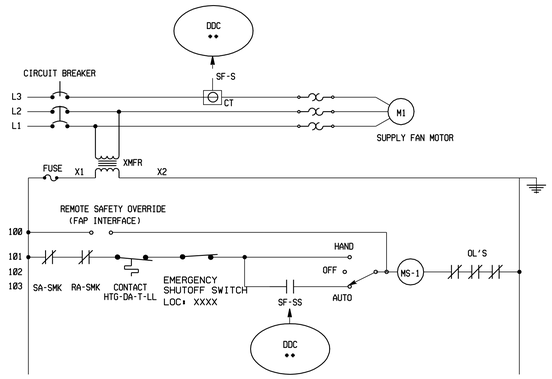


# LADDER DIAGRAM

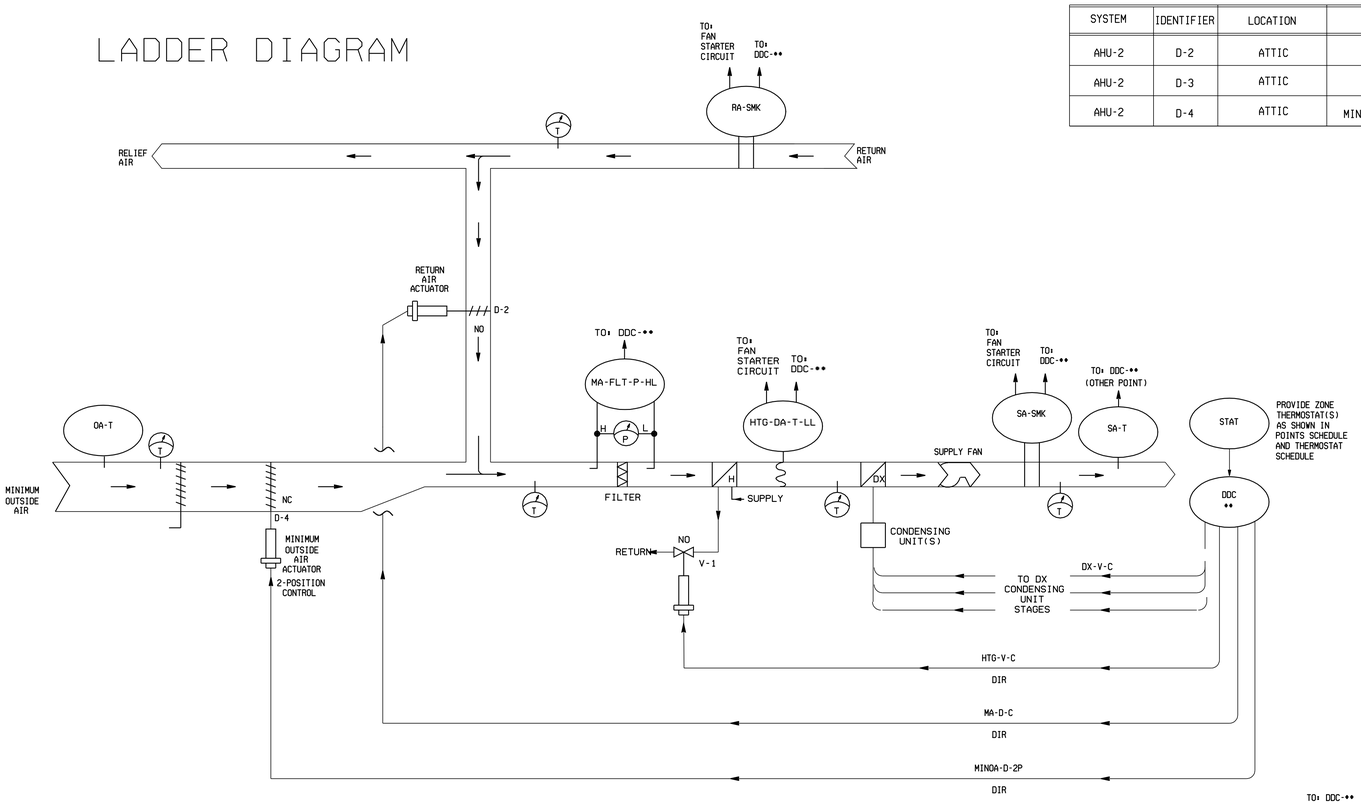


NOTE 1: CONTRACTOR SHALL AFFIX PERMANENT TAGS/LABELS TO ALL DEVICES AS SPECIFIED
NOTE 2: CONTRACTOR SHALL LABEL ALL DDC I/O SIGNAL LINES: 4-20 MA, VDC, OR
NOTE 3: CONTRACTOR SHALL SHOW A UNIQUE IDENTIFIER FOR EACH DEVICE. WERE MULTIPLE IDENTICAL DEVICES ARE SHOWN (FOR EXAMPLE: DDC CONTROLLER, OA SENSOR, OR EP TRANSDUCER) EACH SHALL BE SEQUENTIALLY NUMBERED. WHERE SEPERATE DDC CONTROLLER BUBBLES ARE USED TO REPRESENT/SHOW A COMMON (OR SINGLE) CONTROLLER EACH BUBBLE SHALL USE THE SAME IDENTIFIER AND NUMBER. DEVICE AND SIGNAL IDENTIFIERS SHALL BE CONSISTENT BETWEEN DRAWINGS.
NOTE 4: CONTRACTOR SHALL UNIQUELY NUMBER ALL ANSI 709.1 DEVICES. THIS NUMBERING SHALL BE CONSISTENT BETWEEN ALL DRAWINGS

# CONTROL SYSTEM SCHEMATIC

## THERMOSTAT AND OCCUPANCY SENSOR SCHEDULE

| SYSTEM SERVICE (AHU) | TERMINAL UNIT IDENTIFIER | SPACES SERVED | STAT LOCATION | ZN-T-SP ADJUST | UNOCC OVERRIDE PUSHBUTTON | UNOCC OVERRIDE TIME | OCC SENSOR | OTHER |
|---|---|---|---|---|---|---|---|---|
| AHU-2 | N/A | RM 120 | RM 120 | 20 °C (HEATING)<br>25.6 °C (COOLING) | ——— | ——— | [_] | |

## CONTROL VALVE SCHEDULE

| SYSTEM | IDENTIFIER | LOCATION | FUNCTION | TYPE | RANGE | KV ((M^3)/HR) | CLOSE-OFF RATING (OR TORQUE) | REMARKS |
|---|---|---|---|---|---|---|---|---|
| AHU-2 | V-1 | ATTIC | HEATING COIL VALVE | 2-WAY, MODULATING WITH SPRING RETURN | | [___] | [___] N M | |
| | | | | | | | | |

NOTE: KV = 0.857 * CV

## CONTROL DAMPER SCHEDULE

| SYSTEM | IDENTIFIER | LOCATION | FUNCTION | TYPE | SIZE | RANGE | REMARKS |
|---|---|---|---|---|---|---|---|
| AHU-2 | D-2 | ATTIC | RETURN AIR | MODULATING WITH SPRING RETURN | W X H (MM) | | PARALLEL BLADE |
| AHU-2 | D-3 | ATTIC | OUTSIDE AIR | MODULATING WITH SPRING RETURN | W X H (MM) | | PARALLEL BLADE |
| AHU-2 | D-4 | ATTIC | MINIMUM OUTSIDE AIR | TWO-POSITION WITH SPRING RETURN | W X H (MM) | | PARALLEL BLADE |

## OCCUPANCY SCHEDULE

| SYSTEM SCHEDULE | | | | |
|---|---|---|---|---|
| SYSTEM | OCCUPIED | UNOCCUPIED | WARM-UP | |
| AHU-2 | 365 DAYS A YEAR<br>24 HOURS A DAY | ——— | ——— | |

# SCHEDULES

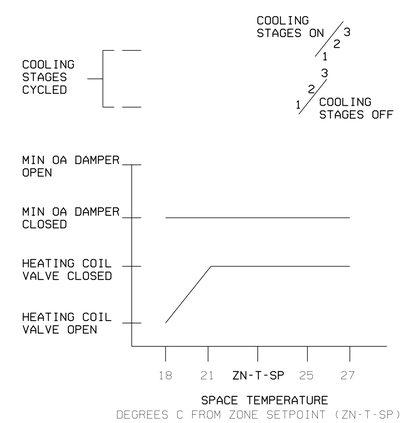


WARMUP/COOLDOWN

NOTE: ALL DIMENSIONS SHOWN ARE IN MILLIMETERS.

US Army Corps of Engineers
New York District

| Symbol | Description | Date | Appr |
|---|---|---|---|

Designed by: | Date: | Size | File:
Dwn by: | Ckd by: | Drawing file no.:
Reviewed by: | Drawing code:
Submitted by: | Plot date: 05-JUN-2009 16:31 | Plot by: | Scale: 0.0000271000000
File name: S:\Division\Military\Fort Hamilton\UFRs\Mechanical\UFRs M-703.dgn

U.S. ARMY ENGINEER DISTRICT
CORPS OF ENGINEERS
NEW YORK, NEW YORK

PN 92224
MILITARY PUBLIC STATION
FORT HAMILTON, NY

HVAC CONTROLS
AHU-2 SCHEMATIC &
LADDER DIAGRAM

Sheet reference number:
M–703

Submitted by: eBandFwb
Sitter=ecomilitary=plot : Hamilton=MPS=DataDrc=CADWorks =A1DDC.cgt
Plot Date: 05-JUN-2009 16:31

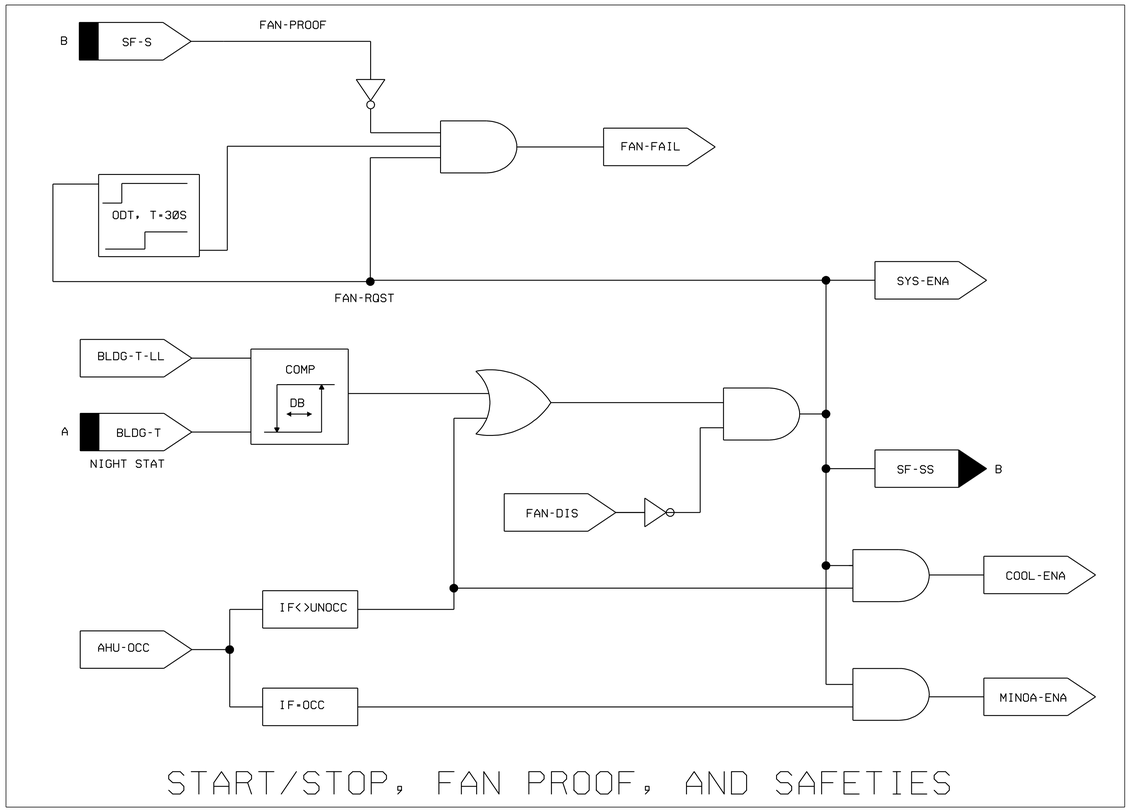


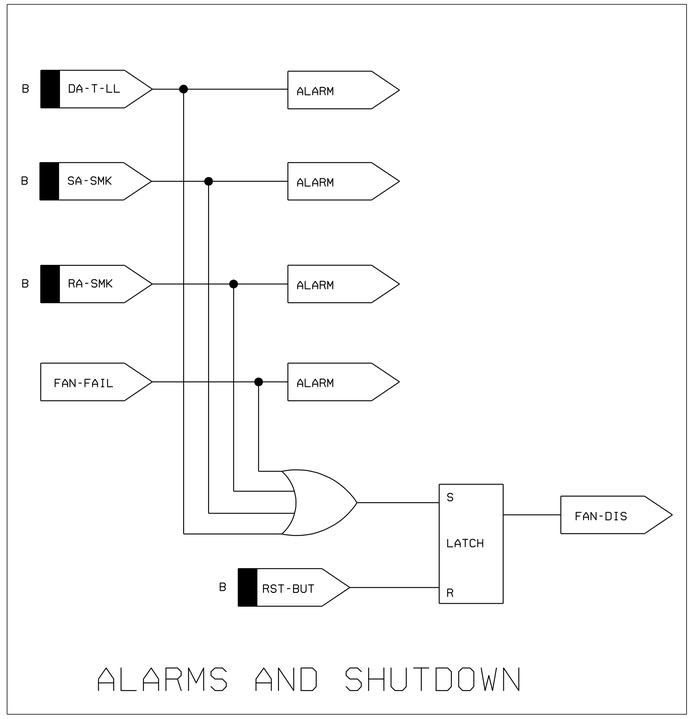


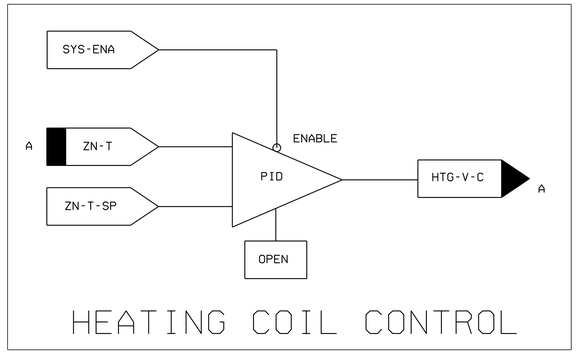


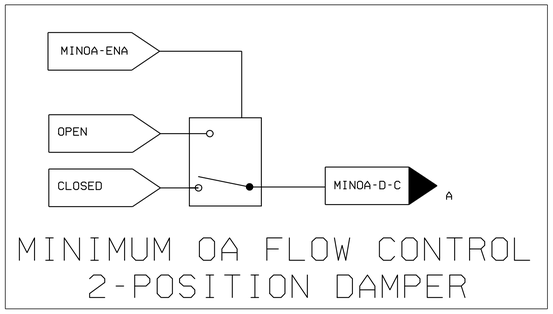


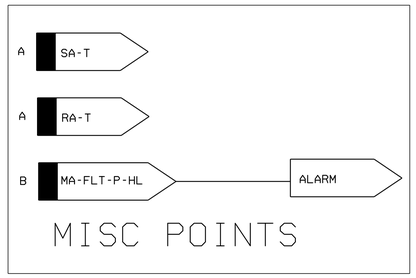


# CONTROL LOGIC DIAGRAM

NOTE: ALL DIMENSIONS SHOWN ARE IN MILLIMETERS.

US Army Corps of Engineers
New York District

| Rev | Date | Description |
|---|---|---|

U.S. ARMY ENGINEER DISTRICT
CORPS OF ENGINEERS
NEW YORK, NEW YORK

Designed by:
Dwn by:
Ckd by:
Reviewed by:
Submitted by:
Date:
Drawing file no.:
Drawing code:
Plot date: 05-JAN-2005 16:31
Plot by: eschmidfeb
Scale: 0.000625:1/000/000
Size
Rev
File name: S:\Secure\military\Fort Hamilton\MPW\Mechanical\LPHTB_M-704.dgn

PN: 52224
MILITARY POLICE STATION
FORT HAMILTON, NY

HVAC CONTROLS
AHU-2 CONTROL LOGIC DIAGRAMS

Sheet reference number:
M-704

©2002

Submitted by: eschmidfeb
Plot Date: 05-JAN-2005 16:31
Plot by: eschmidfeb

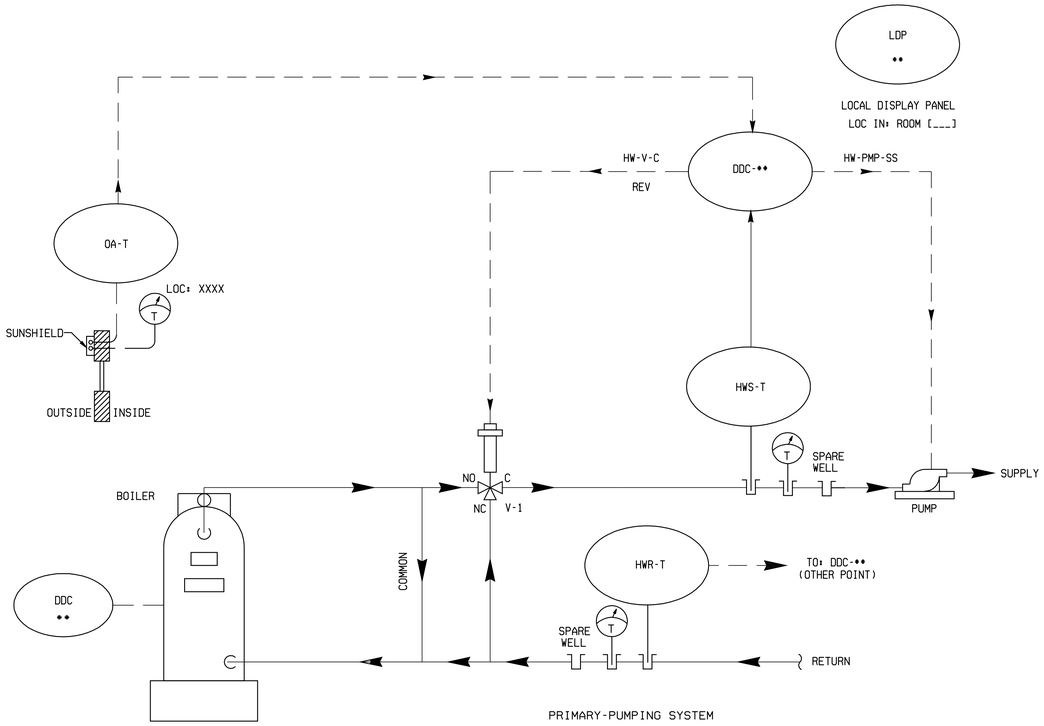


PRIMARY-PUMPING SYSTEM

NOTE 1: CONTRACTOR SHALL AFFIX PERMANENT TAGS/LABELS TO ALL DEVICES AS SPECIFIED
NOTE 2: CONTRACTOR SHALL LABEL ALL DDC I/O SIGNAL LINES: 4-20 MA, VDC, OR SNVT
NOTE 3: CONTRACTOR SHALL SHOW A UNIQUE IDENTIFIER FOR EACH DEVICE. WERE MULTIPLE IDENTICAL DEVICES ARE SHOWN (FOR EXAMPLE; DDC CONTROLLER, OA SENSOR, OR EP TRANSDUCER) EACH SHALL BE SEQUENTIALLY NUMBERED. WHERE SEPERATE DDC CONTROLLER BUBBLES ARE USED TO REPRESENT/SHOW A COMMON (OR SINGLE) CONTROLLER EACH BUBBLE SHALL USE THE SAME IDENTIFIER AND NUMBER. DEVICE AND SIGNAL IDENTIFIERS SHALL BE CONSISTENT BETWEEN DRAWINGS.
NOTE 4: CONTRACTOR SHALL UNIQUELY NUMBER ALL ANSI 709.1 DEVICES. THIS NUMBERING SHALL BE CONSISTENT BETWEEN ALL DRAWINGS

# CONTROL SCHEMATIC

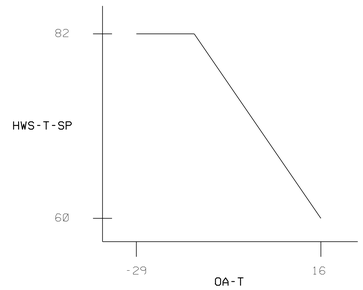


HOT WATER SUPPLY TEMPERATURE RESET SCHEDULE

DEGREES C

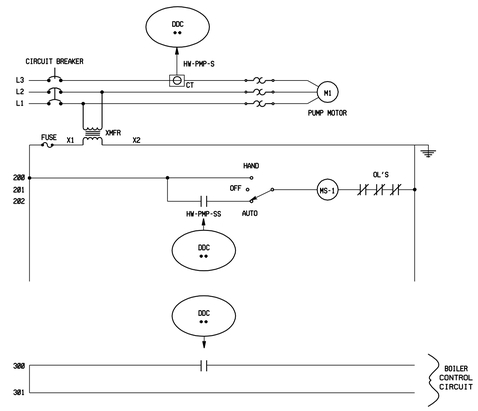


# LADDER DIAGRAM

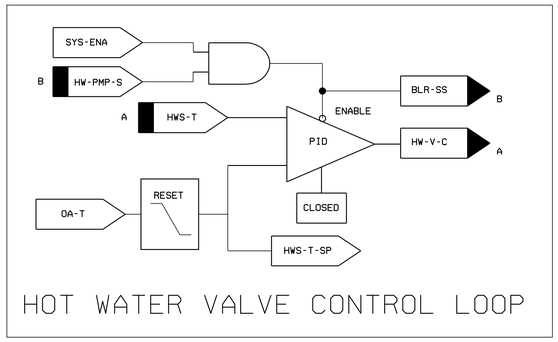


# HOT WATER VALVE CONTROL LOOP

NOTE: ALL DIMENSIONS SHOWN ARE IN MILLIMETERS.

CONTROL VALVE SCHEDULE

| SYSTEM | IDENTIFIER | LOCATION | FUNCTION | TYPE | RANGE | KV ((M^3)/HR) | CLOSE-OFF RATING (OR TORQUE) | REMARKS |
|---|---|---|---|---|---|---|---|---|
| B-1 | V-1 | MECH RM 112 | HOT WATER VALVE | 3-WAY, MODULATING WITH SPRING RETURN | | [___] | [___] N M | |
| | | | | | | | | |

NOTE: KV = 0.857 * CV

# SCHEDULES

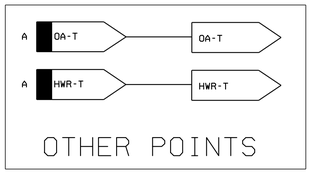


# OTHER POINTS

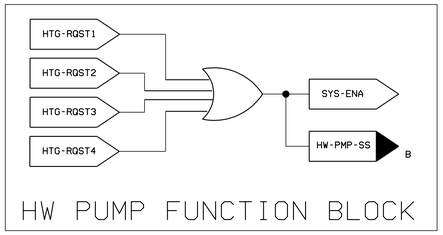


# HW PUMP FUNCTION BLOCK

# CONTROL LOGIC DIAGRAM

US Army Corps of Engineers
New York District

| Symbol | Description | Date | AOD |
|---|---|---|---|

U.S. ARMY ENGINEER DISTRICT
CORPS OF ENGINEERS
NEW YORK, NEW YORK

Designed by:
Date:
Size:
Rev:
Dwn by:
Ckd by:
Drawing file no.:
Reviewed by:
Drawing code:
Submitted by:
Plot date: 05-JAN-2005 16:31
Plot by: e3endfeb
Scale: 0.0000217100000
File name: S:\Vincent\military\Fort Hamilton\MPS\Mechanical\MPS1a_M-705.dgn

Fm. 6225a
MILITARY PACKAGE STATION
FORT HAMILTON, NY

HVAC CONTROLS
B-1 SCHEMATIC &
LADDER DIAGRAM

Sheet reference number:
M–705

Submitted by: e3endfeb
S:\Office\Guardiller\project Hamilton\MPS\Vincent\Guardrails W Mockup\
Plot Date: 05-JAN-2005 16:31

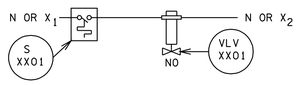


LADDER DIAGRAM FOR 2-POSITION CONTROL

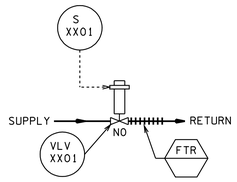


SCHEMATIC FOR MODULATING CONTROL
OR 2-POSITION CONTROL

| SPACE | FTR | THERMOSTAT | VALVE | REMARKS |
|---|---|---|---|---|
| XXXX | XX | TSL-XX01<br>SET:12.8 °F | VLV-XX01 | CV=___<br>CLOSE AGAINST ___ PSIG<br>SEE GENERAL NOTE. |
| . | . | . | . | . |
| XXXX | XX | TSL-XX01<br>SET:12.8 °F | VLV-XXXX | CV=___<br>CLOSE AGAINST ___ PSIG<br>SEE GENERAL NOTE. |

EQUIPMENT SCHEDULE

## FIN TUBE RADIATOR CONTROL SYSTEM

NOTE:
1. PROVIDE NON-ELECTRIC TYPE CONTROL VALVE.

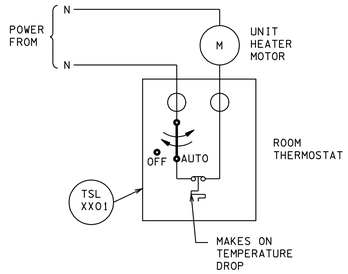


LADDER DIAGRAM

| SPACE | UH | THERMOSTAT |
|---|---|---|
| XXXX | XX | TSL-XX01<br>SET:12.8 °F |
| . | . | . |
| XXXX | XX | TSL-XX01<br>SET:12.8 °F |

EQUIPMENT SCHEDULE

## UNIT-HEATER TEMPERATURE CONTROL SYSTEM

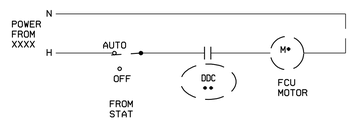


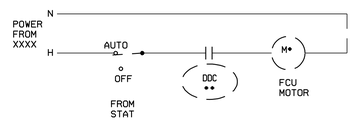


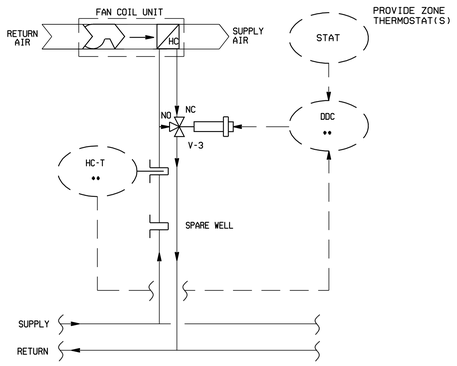


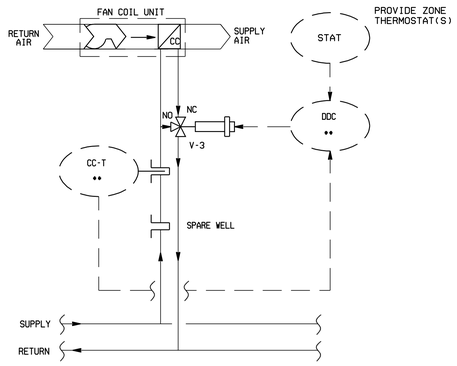


NOTE 1: CONTRACTOR SHALL AFFIX PERMANENT TAGS/LABELS TO ALL DEVICES AS SPECIFIED
NOTE 2: CONTRACTOR SHALL LABEL ALL DDC I/O SIGNAL LINES: 4-20 MA, VDC, OR SNVT
NOTE 3: CONTRACTOR SHALL SHOW A UNIQUE IDENTIFIER FOR EACH DEVICE. WERE MULTIPLE IDENTICAL DEVICES ARE SHOWN (FOR EXAMPLE; DDC CONTROLLER, OA SENSOR, OR EP TRANSDUCER) EACH SHALL BE SEQUENTIALLY NUMBERED. WHERE SEPERATE DDC CONTROLLER BUBBLES ARE USED TO REPRESENT/SHOW A COMMON (OR SINGLE) CONTROLLER EACH BUBBLE SHALL USE THE SAME IDENTIFIER AND NUMBER. DEVICE AND SIGNAL IDENTIFIERS SHALL BE CONSISTENT BETWEEN DRAWINGS.
NOTE 4: CONTRACTOR SHALL UNIQUELY NUMBER ALL ANSI 709.1 DEVICES. THIS NUMBERING SHALL BE CONSISTENT BETWEEN ALL DRAWINGS
NOTE 5: HC-T MAY BE STRAP-ON TYPE AND SHALL GENERATE OUTPUT SNVT FOR HEAT/COOL SIGNAL TO ALL FCU CONTROLLERS

## FAN COIL UNIT

THERMOSTAT AND OCCUPANCY SENSOR SCHEDULE

| SYSTEM SERVICE | TERMINAL UNIT IDENTIFIER | SPACES SERVED | STAT LOCATION | ZN-T-SP ADJUST | UNOCC OVERRIDE PUSHBUTTON | UNOCC OVERRIDE TIME | OCC SENSOR | OTHER |
|---|---|---|---|---|---|---|---|---|
| FCU'S | | SEE DRAWINGS | SEE DRAWINGS | 20 °C (HEATING)<br>25.6 °C (COOLING) | ——— | ——— | ——— | |

CONTROL VALVE SCHEDULE

| SYSTEM | IDENTIFIER | LOCATION | FUNCTION | TYPE | RANGE | KV ((M³)/HR) | CLOSE-OFF RATING (OR TORQUE) | REMARKS |
|---|---|---|---|---|---|---|---|---|
| FCU'S | V-** | SEE DRAWINGS | TERMINAL UNIT VALVE (HEATING) | 3-WAY, MODULATING | | [___] | [___] N M | |
| FCU'S | V-** | SEE DRAWINGS | TERMINAL UNIT VALVE (COOLING) | 3-WAY, MODULATING | | [___] | [___] N M | |

NOTE: KV = 0.857 * CV

OCCUPANCY SCHEDULE

| SYSTEM SCHEDULE | | | | |
|---|---|---|---|---|
| SYSTEM | OCCUPIED | UNOCCUPIED | WARM-UP | |
| FCU'S | M-F 0900-1700 | NIGHTSETBACK | M-F 0800-0900 | |

# SCHEDULES

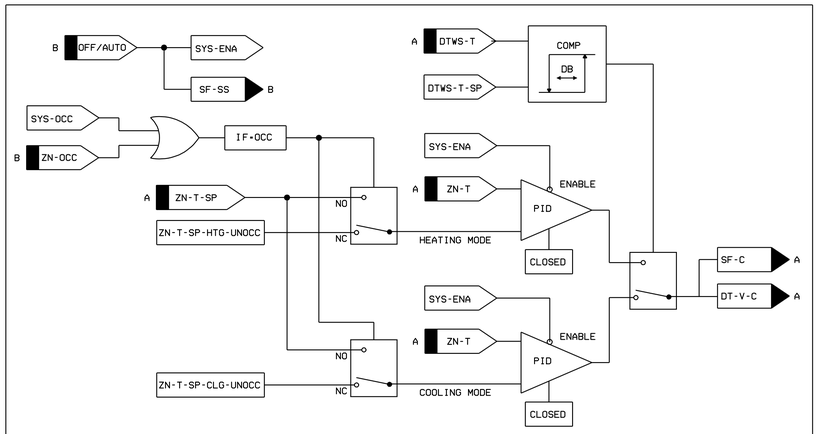


FAN COIL UNIT LADDER DIAGRAM

NOTE: ALL DIMENSIONS SHOWN ARE IN MILLIMETERS.

US Army Corps of Engineers
New York District

| Symbol | Description | Date | Appr |
|---|---|---|---|

Designed by: | Date: | Size | Rev.
Dwn by: | Ckd by: | Drawing file no.:
Reviewed by: | Drawing code:
Submitted by: | Plot date: 05-JAN-2006 16:32 | Plot by: eBendheb | Scale: 0.0393701000000

U.S. ARMY ENGINEER DISTRICT
CORPS OF ENGINEERS
NEW YORK, NEW YORK

File name: S:\Division\military\fort hamilton\dwfg\Mechanical\dwfms_M-706.dgn

P/N 82024
MILITARY PUBLIC FIELD STATION
FORT HAMILTON, NY

HVAC CONTROLS
MISCELLANEOUS DETAILS

Sheet reference number:
M–706

Plot Date: 05-JAN-2006 16:32
Plot By: eBendheb
Submitted by: eBendheb
Sitfile: S:\Division\military\dwf\ Hamilton\dwfM\Scheduled\dwfms.M-706.dgn

NODE: DDC**
NODE LOCATION: <___>
NODE ADDRESS: DOMAIN = <___>, SUBNET = <___>, NODE = <___>
NODE ID: <___>

| FUNCTION | NAME | DESCRIPTION | SETTING (WITH UNITS) | RANGE (WITH UNITS) | NCI/CP NAME | I/O TYPE | LDP AND MCP DISPLAY: LDP VIEW REQ'D | MCP DISP REQ'D | SNVT NAME | SNVT TYPE | OVERRIDES: LDP OVRD REQ'D | MCP OVRD REQ'D | SNVT NAME | SNVT TYPE | ALARMS: ALARM CONDITION (SEE NOTES) | ALARM PRIORITY | SNVT NAME | SNVT TYPE |
|---|---|---|---|---|---|---|---|---|---|---|---|---|---|---|---|---|---|---|
| PROOFS & SAFETIES | SF-S | SUPPLY FAN STATUS | = | ON/OFF | | BI | X | X | <___> | <___> | = | = | = | = | SUPPLY FAN PROOF FAILED | | <___> | <___> |
| | HTG-DA-T-LL | HEATING COIL DISCHARGE AIR TEMP LOW LIMIT | 4 DEG C | ALM/NORMAL | | BI | = | = | = | = | = | = | = | = | ALM | | <___> | <___> |
| | SA-SMK | SUPPLY AIR SMOKE | = | ALM/NORMAL | | BI | = | = | = | = | = | = | = | = | ALM | | <___> | <___> |
| | RST-BUT | SYSTEM RESET BUTTON | = | = | | <___> | = | = | = | = | = | [___] | <___> | <___> | = | | = | = |
| START/STOP | BLDG-T | BUILDING TEMPERATURE (NIGHT STAT) | = | <___> | | AI | = | X | <___> | TEMP_P | = | = | = | = | BLDG-T LESS THAN BLDG-T-LL | | <___> | <___> |
| | BLDG-T-LL-SP | BUILDING TEMP LOW LIMIT SETPOINT | 13 DEG C | = | | = | = | X | <___> | <___> | = | X | <___> | <___> | = | | = | = |
| | SYS-OCC | OCCUPANCY INPUT (FROM SYSTEM SCHEDULER) | = | <___> | | NVI | X | X | <___> | <___> | | SEE NOTES | | | = | | = | = |
| | SF-SS | SUPPLY FAN START/STOP | = | ON/OFF | | BO | X | X | <___> | <___> | = | X | <___> | <___> | = | | = | = |
| MINIMUM OUTSIDE AIRFLOW | MINOA-D-2P | MINIMUM OUTSIDE AIR DAMPER COMMAND (2-POS) | = | OPEN/CLOSED | | BO | = | X | <___> | <___> | = | X | <___> | <___> | = | | = | = |
| | | MINIMUM OUTSIDE AIR FLOW SETTING | [___ LPS] | = | | | = | = | = | = | = | = | = | = | = | | = | = |
| ZONE TEMPERATURE CONTROL: | OA-T | OUTSIDE AIR TEMPERATURE | = | <___> | | AI | X | X | <___> | TEMP_P | = | = | = | = | = | | <___> | <___> |
| MA DAMPERS | ZN-T | ZONE TEMPERATURE | = | <___> | | AI | X | X | <___> | TEMP_P | = | = | = | = | * ZN-T IS MORE THAN 3 DEG C ABOVE OR BELOW ZN-T-SP | | <___> | <___> |
| HEATING COIL | ZN-T-SP | ZONE TEMPERATURE SETPOINT | [OCC ADJ] | 20-25 DEG C | | AI | X | X | <___> | <___> | = | X | <___> | <___> | = | | = | = |
| COOLING COIL | HTG-V-C | HEATING COIL VALVE COMMAND | = | 0-100% OPEN | | AO | X | X | <___> | <___> | = | X | <___> | <___> | = | | = | = |
| | CLG-V-C | COOLING COIL VALVE COMMAND | = | <___> | | <___> | X | X | <___> | <___> | = | X | <___> | <___> | = | | = | = |
| | | HEATING COIL VALVE PID LOOP SETTINGS | <___> | = | | = | = | = | = | = | = | = | = | = | = | | = | = |
| | | COOLING COIL VALVE PID LOOP SETTINGS | <___> | = | | = | = | = | = | = | = | = | = | = | = | | = | = |
| OTHER POINTS | SA-T | SUPPLY AIR TEMPERATURE | = | <___> | | AI | = | X | <___> | TEMP_P | = | = | = | = | = | | <___> | <___> |

# AIR HANDLING UNIT (AHU-1) SCHEDULE

NODE: DDC**
NODE LOCATION: <___>
NODE ADDRESS: DOMAIN = <___>, SUBNET = <___>, NODE = <___>
NODE ID: <___>

| FUNCTION | NAME | DESCRIPTION | SETTING (WITH UNITS) | RANGE (WITH UNITS) | NCI/CP NAME | I/O TYPE | LDP AND MCP DISPLAY: LDP VIEW REQ'D | MCP DISP REQ'D | SNVT NAME | SNVT TYPE | OVERRIDES: LDP OVRD REQ'D | MCP OVRD REQ'D | SNVT NAME | SNVT TYPE | ALARMS: ALARM CONDITION (SEE NOTES) | ALARM PRIORITY | SNVT NAME | SNVT TYPE |
|---|---|---|---|---|---|---|---|---|---|---|---|---|---|---|---|---|---|---|
| PROOFS & SAFETIES | SF-S | SUPPLY FAN STATUS | = | ON/OFF | | BI | X | X | <___> | <___> | = | = | = | = | SUPPLY FAN PROOF FAILED | | <___> | <___> |
| | HTG-DA-T-LL | HEATING COIL DISCHARGE AIR TEMP LOW LIMIT | 4 DEG C | ALM/NORMAL | | BI | = | = | = | = | = | = | = | = | ALM | | <___> | <___> |
| | SA-SMK | SUPPLY AIR SMOKE | = | ALM/NORMAL | | BI | = | = | = | = | = | = | = | = | ALM | | <___> | <___> |
| | RA-SMK | RETURN AIR SMOKE | = | ALM/NORMAL | | BI | = | = | = | = | = | = | = | = | ALM | | <___> | <___> |
| | RST-BUT | SYSTEM RESET BUTTON | = | = | | <___> | = | = | = | = | = | [___] | <___> | <___> | = | | = | = |
| START/STOP | BLDG-T | BUILDING TEMPERATURE (NIGHT STAT) | = | <___> | | AI | = | X | <___> | TEMP_P | = | = | = | = | BLDG-T LESS THAN BLDG-T-LL | | <___> | <___> |
| | BLDG-T-LL | BUILDING TEMP LOW LIMIT SETPOINT | 13 DEG C | = | | = | = | X | <___> | <___> | = | X | <___> | <___> | = | | = | = |
| | SYS-OCC | OCCUPANCY INPUT (FROM SYSTEM SCHEDULER) | = | <___> | | NVI | X | X | <___> | <___> | | SEE NOTES | | | = | | = | = |
| | SF-SS | SUPPLY FAN START/STOP | = | ON/OFF | | BO | X | X | <___> | <___> | = | X | <___> | <___> | = | | = | = |
| MINIMUM OUTSIDE AIRFLOW | MINOA-D-2P | MINIMUM OUTSIDE AIR DAMPER COMMAND (2-POS) | = | OPEN/CLOSED | | BO | = | X | <___> | <___> | = | X | <___> | <___> | = | | = | = |
| | | MINIMUM OUTSIDE AIR FLOW SETTING | [___ LPS] | = | | | = | = | = | = | = | = | = | = | = | | = | = |
| ZONE TEMPERATURE CONTROL: | OA-T | OUTSIDE AIR TEMPERATURE | = | <___> | | AI | X | X | <___> | TEMP_P | = | = | = | = | = | | <___> | <___> |
| | MA-D-C | MIXED AIR DAMPER COMMAND | = | 0-100% OPEN | | AO | X | X | <___> | <___> | = | X | <___> | <___> | = | | = | = |
| | | MIXED AIR PID LOOP SETTINGS | <___> | = | | = | = | = | = | = | = | = | = | = | = | | = | = |
| MA DAMPERS | ZN-T | ZONE TEMPERATURE | = | <___> | | AI | X | X | <___> | TEMP_P | = | = | = | = | * ZN-T IS MORE THAN 3 DEG C ABOVE OR BELOW ZN-T-SP | | <___> | <___> |
| HEATING COIL | ZN-T-SP | ZONE TEMPERATURE SETPOINT | [OCC ADJ] | 20-25 DEG C | | AI | X | X | <___> | <___> | = | X | <___> | <___> | = | | = | = |
| DX COIL | HTG-V-C | HEATING COIL VALVE COMMAND | = | 0-100% OPEN | | AO | X | X | <___> | <___> | = | X | <___> | <___> | = | | = | = |
| | DX-V-C | DX UNIT COMMAND | = | <___> | | <___> | X | X | <___> | <___> | = | X | <___> | <___> | = | | = | = |
| | | HEATING COIL VALVE PID LOOP SETTINGS | <___> | = | | = | = | = | = | = | = | = | = | = | = | | = | = |
| | | DX UNIT PID LOOP SETTINGS | <___> | = | | = | = | = | = | = | = | = | = | = | = | | = | = |
| OTHER POINTS | SA-T | SUPPLY AIR TEMPERATURE | = | <___> | | AI | = | X | <___> | TEMP_P | = | = | = | = | = | | <___> | <___> |
| | MA-FLT-P-HL | MIXED AIR FILTER PRESSURE HIGH LIMIT SWITCH | <___> | ALM/NORMAL | | BI | = | = | <___> | <___> | = | = | = | = | ALM | | <___> | <___> |

# AIR HANDLING UNIT (AHU-2) SCHEDULE

NOTES

- THE CONTRACTOR SHALL COMPLETE THE POINTS SCHEDULE. BUILDING SHALL BE A STAND-ALONE SYSTEM.
- UNIT MANUFACTURERS PROOFS AND SAFETIES: THE CONTRACTOR SHALL SHOW EACH PROOF AND SAFETY AS A SEPARATE ROW
- SYS-OCC: N/A OR NULL VALVE, OVERRIDE OF SYS-OCC IS ACCOMPLISHED THROUGH THE SYSTEM SCHEDULER
- ALARM CONDITIONS MARKED WITH A SINGLE ASTERISK SHALL BE ACTIVE ONLY WHEN THE SYSTEM IS IN OCCUPIED MODE AND HAS BEEN IN OCCUPIED MODE FOR MORE THAN : **5 MINUTES, ***30 MINUTES
- UNIT STATUS: SERVES AS A MONITORED POINT AT THE MAIN CONTROL PANEL AND AS A HEATING/COOLING REQUEST TO THE BOILER, CHILLER AND DIRECT EXPANSION SERVING THIS SYSTEM .

NOTE: ALL DIMENSIONS SHOWN ARE IN MILLIMETERS.

US Army Corps of Engineers
New York District

| Symbol | Description | Date | Appr. |
|---|---|---|---|

US ARMY ENGINEER DISTRICT
CORPS OF ENGINEERS
NEW YORK, NEW YORK

Designed by: | Date: | Size | Rev.
Dwn by: | Ckd by: | Drawing file no.:
Reviewed by: | Drawing code:
Submitted by: | Plot date: 05-JAN-2005 16:32 | Plot scale: 1 | Size: 0.0000211000000
File name: S:\Division\military\fort hamilton\dPWg\Mechanical\dPWg_M-707.dgn

P.N. 82024
MILITARY PUBLIC HEALTH STATION
FORT HAMILTON, NY

HVAC CONTROLS
POINT SCHEDULES – 1

Sheet reference number:
M–707

Submitted by: eBendheb
Plot Date: 05-JAN-2005 16:32
Plot Scale: 1
Plot Name: S:\Division\military\fort hamilton\dPWg\Mechanical\dPWg_M-707.dgn

NODE: DDC**
NODE LOCATION: <___>
NODE ADDRESS: DOMAIN - <___>, SUBNET - <___>, NODE - <___>
NODE ID: <___>

| FUNCTION | NAME | DESCRIPTION | SETTING (WITH UNITS) | RANGE (WITH UNITS) | NCI/CP NAME | I/O TYPE | LDP AND MCP DISPLAY | | | | OVERRIDES | | | | ALARMS | | | |
|---|---|---|---|---|---|---|---|---|---|---|---|---|---|---|---|---|---|---|
| | | | | | | | LDP VIEW REQ'D | MCP DISP REQ'D | SNVT NAME | SNVT TYPE | LDP OVRD REQ'D | MCP OVRD REQ'D | SNVT NAME | SNVT TYPE | ALARM CONDITION (SEE NOTES) | ALARM PRIORITY | SNVT NAME | SNVT TYPE |
| PROOFS & SAFETIES | HW-PMP-S | HOT WATER PUMP STATUS | * | ON/OFF | | | X | X | <___> | <___> | * | * | * | * | * | | <___> | <___> |
| START/STOP | SYS-ENA | SYSTEM ENABLE | * | ENABLE/DISABLE | | <NVI> | X | X | <___> | <___> | * | X | <___> | <___> | * | | * | * |
| | HW-PMP-SS | HOT WATER PUMP START/STOP | * | START/STOP | | BO | * | * | <___> | <___> | * | X | <___> | <___> | * | | * | * |
| HOT WATER TEMPERATURE CONTROL | BLR-S | BOILER STATUS (STATE) | * | START/STOP | | <BI> | X | X | <___> | <___> | * | * | * | * | * | | * | * |
| | OA-T | OUTSIDE AIR TEMPERATURE | * | <___> | | AI | X | X | <___> | <___> | * | * | * | * | * | | * | * |
| | HWS-T | HOT WATER SUPPLY TEMPERATURE | * | <___> | | AI | X | X | <___> | <___> | * | * | * | * | * HWS-T MORE THAN 5 DEG C ABOVE OR BELOW HWS-T-SP | | <___> | <___> |
| | HWS-T-SP | HOT WATER SUPPLY TEMPERATURE SETPOINT | RESET | * | | * | X | X | <___> | <___> | * | X | <___> | <___> | * | | * | * |
| | HW-V-C | HOT WATER VALVE COMMAND | [_*_] | 0-100% OPEN | | AO | X | X | <___> | <___> | * | X | <___> | <___> | * | | <___> | <___> |
| | | HOT WATER VALVE PID LOOP SETTINGS | <___> | * | | * | * | * | * | * | * | * | * | * | * | | * | * |
| SYSTEMS SERVED | HTG-RQST1 | [___] | * | START/STOP | | NVI | * | X | <___> | <___> | * | * | * | * | * | | * | * |
| | HTG-RQST2 | [___] | * | START/STOP | | NVI | * | X | <___> | <___> | * | * | * | * | * | | * | * |
| OTHER POINTS | HWR-T | HOT WATER RETURN TEMPERATURE | * | <___> | | AI | X | X | <___> | <___> | * | * | * | * | * | | * | * |
| | BLR-S | BOILER STATUS (STATE) | * | ON/OFF | | <BI> | X | X | <___> | <___> | * | * | * | * | * | | * | * |

# BOILER (B-1) SCHEDULE

NODE: DDC**
NODE LOCATION: <___>
NODE ADDRESS: DOMAIN - <___>, SUBNET - <___>, NODE - <___>
NODE ID: <___>

| FUNCTION | NAME | DESCRIPTION | SETTING (WITH UNITS) | RANGE (WITH UNITS) | NCI/CP NAME | I/O TYPE | LDP AND MCP DISPLAY | | | | OVERRIDES | | | | ALARMS | | | |
|---|---|---|---|---|---|---|---|---|---|---|---|---|---|---|---|---|---|---|
| | | | | | | | LDP VIEW REQ'D | MCP DISP REQ'D | SNVT NAME | SNVT TYPE | LDP OVRD REQ'D | MCP OVRD REQ'D | SNVT NAME | SNVT TYPE | ALARM CONDITION (SEE NOTES) | ALARM PRIORITY | SNVT NAME | SNVT TYPE |
| PROOFS & SAFETIES | CW-PMP-S | CHILLED WATER PUMP (CWP-1,2) STATUS | * | ON/OFF | | | X | X | <___> | <___> | * | * | * | * | * | | <___> | <___> |
| START/STOP | SYS-ENA | SYSTEM ENABLE | * | ENABLE/DISABLE | | <NVI> | X | X | <___> | <___> | * | X | <___> | <___> | * | | * | * |
| | CW-PMP-SS | CHILLED WATER PUMP (CWP-1,2)START/STOP | * | START/STOP | | BO | * | * | <___> | <___> | * | X | <___> | <___> | * | | * | * |
| CHILLED WATER TEMPERATURE CONTROL | CH-S | CHILLER STATUS (STATE) | * | START/STOP | | <BI> | X | X | <___> | <___> | * | * | * | * | * | | * | * |
| | OA-T | OUTSIDE AIR TEMPERATURE | * | <___> | | AI | X | X | <___> | <___> | * | * | * | * | * | | * | * |
| | CHWS-T | CHILLED WATER SUPPLY TEMPERATURE | * | <___> | | AI | X | X | <___> | <___> | * | * | * | * | * CHWS-T MORE THAN -6.7 DEG C ABOVE OR BELOW CHWS-T-SP | | <___> | <___> |
| | CHWS-T-SP | CHILLED WATER SUPPLY TEMPERATURE SETPOINT | RESET | * | | * | X | X | <___> | <___> | * | X | <___> | <___> | * | | * | * |
| | CHW-V-C | CHILLED WATER VALVE COMMAND | [_*_] | 0-100% OPEN | | AO | X | X | <___> | <___> | * | X | <___> | <___> | * | | <___> | <___> |
| | | CHILLED WATER VALVE PID LOOP SETTINGS | <___> | * | | * | * | * | * | * | * | * | * | * | * | | * | * |
| DX WATER TEMPERATURE CONTROL | DX-S | DX STATUS (STATE) | * | START/STOP | | <BI> | X | X | <___> | <___> | * | * | * | * | * | | * | * |
| | OA-T | OUTSIDE AIR TEMPERATURE | * | <___> | | AI | X | X | <___> | <___> | * | * | * | * | * | | * | * |
| | DXWS-T | DX WATER SUPPLY TEMPERATURE | * | <___> | | AI | X | X | <___> | <___> | * | * | * | * | * DXWS-T MORE THAN -6.7 DEG C ABOVE OR BELOW DXWS-T-SP | | <___> | <___> |
| | DXWS-T-SP | DX WATER SUPPLY TEMPERATURE SETPOINT | RESET | * | | * | X | X | <___> | <___> | * | X | <___> | <___> | * | | * | * |
| | DXW-V-C | DX WATER VALVE COMMAND | [_*_] | 0-100% OPEN | | AO | X | X | <___> | <___> | * | X | <___> | <___> | * | | <___> | <___> |
| | | DX WATER VALVE PID LOOP SETTINGS | <___> | * | | * | * | * | * | * | * | * | * | * | * | | * | * |
| SYSTEMS SERVED | CH-RQST1 | [___] | * | START/STOP | | NVI | * | X | <___> | <___> | * | * | * | * | * | | * | * |
| | CH-RQST2 | [___] | * | START/STOP | | NVI | * | X | <___> | <___> | * | * | * | * | * | | * | * |
| | DX-RQST1 | [___] | * | START/STOP | | NVI | * | X | <___> | <___> | * | * | * | * | * | | * | * |
| | DX-RQST2 | [___] | * | START/STOP | | NVI | * | X | <___> | <___> | * | * | * | * | * | | * | * |
| OTHER POINTS | CHWR-T | CHILLED WATER RETURN TEMPERATURE | * | <___> | | AI | X | X | <___> | <___> | * | * | * | * | * | | * | * |
| | CH-S | CHILLED STATUS (STATE) | * | ON/OFF | | <BI> | X | X | <___> | <___> | * | * | * | * | * | | * | * |
| | DXWR-T | DX WATER RETURN TEMPERATURE | * | <___> | | AI | X | X | <___> | <___> | * | * | * | * | * | | * | * |
| | DX-S | DX STATUS (STATE) | * | ON/OFF | | <BI> | X | X | <___> | <___> | * | * | * | * | * | | * | * |

# CHILLER (CH-1) AND DIRECT EXPANSION (DX-1)SCHEDULE

DDC HARDWARE: <DDC**>
DDC HARDWARE LOCATION: <___>
NODE ADDRESS: DOMAIN = <___>, SUBNET = <___>, NODE = <___>
NODE ID: <___>

| FUNCTION | NAME | DESCRIPTION | SETTING (WITH UNITS) | RANGE (WITH UNITS) | NCI/CP NAME | I/O TYPE | LDP AND MCP DISPLAY | | | | OVERRIDES | | | | ALARMS | | | |
|---|---|---|---|---|---|---|---|---|---|---|---|---|---|---|---|---|---|---|
| | | | | | | | LDP VIEW REQ'D | MCP DISP REQ'D | SNVT NAME | SNVT TYPE | LDP OVRD REQ'D | MCP OVRD REQ'D | SNVT NAME | SNVT TYPE | ALARM CONDITION (SEE NOTES) | ALARM PRIORITY | SNVT NAME | SNVT TYPE |
| PROOFS & SAFETIES | <___> | UNIT MANUFACTURER'S PROOF (SEE NOTES) | <___> | ALM/NORMAL | | <BI> | * | * | * | * | * | * | * | * | * | | <___> | <___> |
| | <___> | UNIT MANUFACTURER'S SAFETIES (SEE NOTES) | <___> | ALM/NORMAL | | <BI> | * | * | * | * | * | * | * | * | ALM | | <___> | <___> |
| START/STOP | SYS-OCC | OCCUPANCY INPUT (FROM SYSTEM SCHEDULER) | * | * | | NVI | * | X | <___> | <___> | SEE NOTES | | | | * | | * | * |
| | ZN-OCC | ZONE OCCUPANCY INPUT | * | * | | BI | * | * | <___> | <___> | * | * | * | * | * | | * | * |
| | EFF-OCC | EFFECTIVE OCCUPANCY | * | OCC/UNOCC | | NVO | * | X | <___> | OCCUPANCY | * | * | * | * | * | | * | * |
| | UNIT STATUS | UNIT STATUS (HTG AND/OR CLG REQUEST) (SEE NOTE) | * | HVAC_COOL/ HVAC_HEAT/HVAC_OFF | | NVO | * | X | <___> | HVAC_STATUS | * | * | * | * | * | | * | * |
| ZONE TEMPERATURE CONTROL | HWS-T | HEATING WATER SUPPLY TEMPERATURE | * | <___> | | <AI> | * | X | <___> | <___> | * | * | * | * | * | | * | * |
| | HWS-T-SP | HEATING WATER SUPPLY TEMPERATURE SETPOINT | * | <___> | | <AI> | * | X | <___> | <___> | * | * | * | * | * | | * | * |
| | CHWS-T | CHILLED WATER SUPPLY TEMPERATURE | * | <___> | | <AI> | * | X | <___> | <___> | * | * | * | * | * | | * | * |
| | CWS-T-SP | CHILLED WATER SUPPLY TEMPERATURE SETPOINT | * | <___> | | <AI> | * | X | <___> | <___> | * | * | * | * | * | | * | * |
| | ZN-T | ZONE TEMPERATURE | * | <___> | | AI | * | X | <___> | TEMP_P | * | * | * | * | * ZN-T MORE THAN 25 DEG C OR BELOW 20 DEG C | | <___> | <___> |
| | ZN-T-SP | ZONE TEMPERATURE SETPOINT | [OCC ADJ] | 20-25 DEG C | | AI | * | X | <___> | <___> | * | X | <___> | <___> | * | | * | * |
| | ZN-T-SP-HTG-UNOCC | ZONE TEMPERATURE SETPOINT FOR UNOCCUPIED HEATING MODE | 12.8 DEG C | * | | * | * | * | <___> | <___> | * | * | <___> | <___> | * | | * | * |
| | HW-V-C | HOT WATER VALVE COMMAND | * | 0-100% OPEN | | AO | * | X | <___> | <___> | * | * | * | * | * | | * | * |
| | CHW-V-C | CHILLED WATER VALVE COMMAND | * | 0-100% OPEN | | AO | * | X | <___> | <___> | * | * | * | * | * | | * | * |
| | OFF/AUTO | UNIT OFF/AUTO SWITCH | * | OFF/AUTO | | BI | * | * | <___> | <___> | * | * | * | * | * | | * | * |
| | SF-SS | SUPPLY FAN START/STOP | * | OFF/LO/MED/HI | | BO | * | X | <___> | <___> | * | * | * | * | * | | * | * |
| | | HOT WATER VALVE PID LOOP SETTINGS | * | * | | * | * | * | * | * | * | * | * | * | * | | * | * |
| | | CHILLED WATER VALVE PID LOOP SETTINGS | * | * | | * | * | * | * | * | * | * | * | * | * | | * | * |

# FAN COIL UNITS (FCU) SCHEDULE

NOTES

- THE CONTRACTOR SHALL COMPLETE THE POINTS SCHEDULE. BUILDING SHALL BE A STAND-ALONE SYSTEM.
- UNIT MANUFACTURERS PROOFS AND SAFETIES: THE CONTRACTOR SHALL SHOW EACH PROOF AND SAFETY AS A SEPARATE ROW
- SYS-OCC: N/A OR NULL VALVE, OVERRIDE OF SYS-OCC IS ACCOMPLISHED THROUGH THE SYSTEM SCHEDULER
- ALARM CONDITIONS MARKED WITH A SINGLE ASTERISK SHALL BE ACTIVE ONLY WHEN THE SYSTEM IS IN OCCUPIED MODE AND HAS BEEN IN OCCUPIED MODE FOR MORE THAN : *-5 MINUTES, **-30 MINUTES
- UNIT STATUS: SERVES AS A MONITORED POINT AT THE MAIN CONTROL PANEL AND AS A HEATING/COOLING REQUEST TO THE BOILER, CHILLER AND DIRECT EXPANSION SERVING THIS SYSTEM .

NOTE: ALL DIMENSIONS SHOWN ARE IN MILLIMETERS.

US Army Corps of Engineers
New York District

Symbol | Description | Date | Appr.

Designed by: | Dwn by: | Ckd by: | Reviewed by: | Submitted by:
Date: | Size: | Rev.: | Drawing file no.: | Drawing code:
Plot date: 05-JAN-2005 16:32 | Plot by: e3endfwb | Scale: 0.031922:1.000000

U.S. ARMY ENGINEER DISTRICT
CORPS OF ENGINEERS
NEW YORK, NEW YORK

File name: S:\fileroom\military\Fort Hamilton\MPSta\Mechanical\MPSta M-708.dgn

PN 52224
MILITARY POLICE STATION
FORT HAMILTON, NY

HVAC CONTROLS
POINT SCHEDULES - 2

Sheet reference number:
M-708

Plot Date: 05-JAN-2005 16:32
Submitted by: e3endfwb
S:\fileroom\military\Fort Hamilton\MPSta\Mechanical\MPSta M-708.dgn

# MECHANICAL DRAWING ABBREVIATIONS AND SYMBOLS (PLUMBING)

## ABBREVIATIONS

### A

| | |
|---|---|
| AFF | ABOVE FINISHED FLOOR |
| AFG | ABOVE FINISHED GRADE |
| AG | AIR GAP |
| AGA | AMERICAN GAS ASSOCIATION |
| AN | ACID NEUTRALIZER |
| ANSI | AMERICAN NATIONAL STANDARD INSTITUTE |
| AP | ALARM PANEL |
| ASME | AMERICAN SOCIETY OF MECHANICAL ENGINEERS |
| ASSE | AMERICAN SOCIETY OF SANITARY ENGINEERS |
| ASTM | AMERICAN SOCIETY FOR TESTING & MATERIALS |
| AUTO | AUTOMATIC |
| AV | ACID VENT |
| AW | ACID WASTE |
| AWWA | AMERICAN WATER WORKS ASSOCIATION |

### B

| | |
|---|---|
| BFF | BELOW FINISHED FLOOR |
| BFG | BELOW FINISHED GRADE |
| BM | BEAM |
| BR | BRANCH |
| BSMT | BASEMENT |
| BTU | BRITISH THERMAL UNIT |
| BTUH | BRITISH THERMAL UNIT PER HOUR |
| B.O.P. | BOTTOM OF PIPE |

### C

| | |
|---|---|
| CA | COMPRESSED AIR |
| CMS | CUBIC METERS PER SECOND |
| CI | CAST IRON |
| CIRC | CIRCULATOR |
| CLG | CEILING |
| CO | CLEANOUT |
| COD | CLEANOUT WITH DECK PLATE |
| COL | COLUMN |
| CONN | CONNECT, CONNECTION |
| CP | CHROME PLATE |
| CU FT | CUBIC FEET |
| CU IN | CUBIC INCH |
| CW | DOMESTIC COLD WATER |

### D

| | |
|---|---|
| DCW | DOMESTIC COLD WATER |
| DHW | DOMESTIC HOT WATER |
| DF | DRINKING FOUNTAIN |
| DHWCP | DOMESTIC HOT WATER CIRCULATING PUMP |
| DHW | DOMESTIC HOT WATER SUPPLY |
| DHWR | DOMESTIC HOT WATER RETURN |
| DN | DOWN |
| DPX | DUPLEX |
| DR | DRAIN |
| DWG | DRAWING |

### E

| | |
|---|---|
| EJ | EJECTOR |
| EL | ELEVATION |
| ELEC | ELECTRICAL |
| EQUIP | EQUIPMENT |
| ES | EMERGENCY SHOWER |
| EW | EYE WASH |
| EWC | ELECTRIC WATER COOLER |
| EX | EXIST./EXISTING |

### F

| | |
|---|---|
| FCOD | FLOOR CLEANOUT WITH DECK PLATE |
| FD | FLOOR DRAIN |
| FDHC | FIRE DEPARTMENT HOSE CONNECTION |
| FEC | FIRE EXTINGUISHER CABINET |
| FH | FIRE HOSE |
| FIX | FIXTURE |
| FFEL | FINISHED FLOOR ELEVATION |
| FU | FIXTURE UNIT |
| FUD | FUNNEL DRAIN |
| FW | FIRE WATER |

### G

| | |
|---|---|
| GAL | GALLON |
| GALV | GALVANIZED |
| GPH | GALLONS PER HOUR |
| GPM | GALLONS PER MINUTE |
| GI | GREASE INTERCEPTOR |

### H

| | |
|---|---|
| HB | HOSE BIBB |
| HCLG | HUNG CEILING |
| HC | HANDICAPPED |
| HDS | HEADS |
| HCEWC | HANDICAP ELECTRIC WATER COOLER |
| HLAV | HANDICAP LAVATORY |
| HLA | HIGH LEVEL ALARM |
| HOA | HAND OFF AUTOMATIC |
| HOR | HORIZONTAL |
| HP | HORSEPOWER |
| HTR | HEATER |
| HVAC | HEATING/VENTILATING AND AIR CONDITIONING |
| HWC | HANDICAP WATER CLOSET |
| HWG | HOT WATER GENERATOR |
| HZ | HERTZ |

### I

| | |
|---|---|
| INV EL | INVERT ELEVATION |
| IN | INCH |

### J

| | |
|---|---|
| JAN. | JANITOR |
| JC | JANITORS CLOSET |

### K

| | |
|---|---|
| KEQ | KITCHEN EQUIPMENT |
| KW | KILOWATT |

### L

| | |
|---|---|
| L | LEADER |
| L/S | LITERS PER SECOND |
| LAP | LOCAL ALARM PANEL |
| LAV | LAVATORY |
| LBS | POUNDS |
| LPH | LITERS PER HOUR |
| LPM | LITERS PER MINUTE |

### M

| | |
|---|---|
| MAX | MAXIMUM |
| MECH | MECHANICAL |
| MER | MECHANICAL EQUIPMENT ROOM |
| MH | MANHOLE |
| MIN | MINIMUM |
| MJ | MECHANICAL JOINT |
| MM | MILLIMETERS |
| MS | MOP SINK |
| MTD | MOUNTED |

### N

| | |
|---|---|
| NC | NORMALLY CLOSED |
| NEMA | NATIONAL ELECTRIC MANUFACTURERS ASSOC. |
| NFPA | NATIONAL FIRE PROTECTION ASSOC. |
| NIC | NOT IN CONTRACT |
| NO | NORMALLY OPEN |
| NTS | NOT TO SCALE |

### O

| | |
|---|---|
| OC | ON CENTER |
| OSHA | OCCUPATION SAFETY & HEALTH ACT |

### P

| | |
|---|---|
| PH | PHASE |
| PLBG | PLUMBING |
| PNEU | PNEUMATIC |
| PRES | PRESSURE |
| PRV | PRESSURE REGULATING VALVE |
| PS | PRESSURE SWITCH |
| PSI | POUNDS PER SQUARE INCH |

### R

| | |
|---|---|
| RCV | RISER CONTROL VALVE |
| REC | RECESSED |
| REV | REVISE, REVISED |
| RM | ROOM |
| RPM | REVOLUTIONS PER MINUTE |

### S

| | |
|---|---|
| S | SOIL |
| SC | SILLCOCK |
| SD | STORM DRAIN |
| SEP | SEWER EJECTOR PUMP |
| SH | SHOWER |
| SHD | SHOWER DRAIN |
| SK | SINK |
| SL | SLEEVE |
| SPEC | SPECIFICATIONS |
| SQ IN | SQUARE INCH |
| SS | SERVICE SINK |
| STD | STANDARD |
| STER | STERILIZER |
| STD | STANDARD |

### T

| | |
|---|---|
| TEMP | TEMPERATURE |
| TF | TOP OF FRAME |
| TOS | TOP OF SLAB |
| TRD | TRENCH DRAIN |
| TS | TAMPER SWITCH |
| TYP | TYPICAL |
| TDH | TOTAL DYNAMIC HEAD |
| UC | UNDER COUNTER |
| UL | UNDERWRITER LABORATORY |
| UR | URINAL |
| USSG | UNITED STATES STANDARD GAUGE |

### V

| | |
|---|---|
| V | VENT |
| VB | VACUUM BREAKER |
| VEL | VELOCITY |
| VERT | VERTICAL |
| VOL | VOLUME |
| VTR | VENT THROUGH ROOF |

### W

| | |
|---|---|
| W | WASTE |
| WC | WATER CLOSET |
| WCOP | WALL CLEANOUT WITH WALL PLATE |
| WFS | WATER FLOW SWITCH |
| WH | WALL HYDRANT |
| WHA | WATER HAMMER ARRESTOR |
| WM | WATER METER |
| WOG | WATER, OIL OR GAS |
| WP | WORKING PRESSURE |
| WS | WASH SINK |
| WSP | WORKING STEAM PRESSURE |
| WT | WEIGHT |
| W/ | WITH |

### Z

| | |
|---|---|
| ZCV | ZONE CONTROL VALVE |

## SYMBOLS

| SYMBOL | DESCRIPTION |
|---|---|
| — S D — | STORM DRAIN |
| — — S S — — | SANITARY SEWER LINE |
| — DHW — | DOMESTIC HOT WATER SUPPLY |
| — DHWR — | DOMESTIC HOT WATER RETURN |
| - - - - - - - | VENT LINE |
| — I W — | INDIRECT WASTE (IW) |
| — A W — | ACID WASTE (AW) |
| — A V — | ACID VENT (AV) |
| — - - — | COLD WATER (CW) |
| — - - — | DOMESTIC HOT WATER SUPPLY (DHW) |
| — - - - - — | DOMESTIC HOT WATER RETURN (DHWR) |
| — G — | GAS |
| — LPG — | LIQUID PROPANE GAS |
| — P D — | PUMP DISCHARGE (PD) |
| — V — | MANUAL VALVE |
| | TRIPLE DUTY VALVE |
| | GLOBE VALVE |
| B | BALANCING VALVE |
| | COMBINATION BALANCING COCK AND SHUT-OFF VALVE |
| | HEAT TRACING (HT TR) & INSULATION |
| ℄ | CENTER LINE |
| | GATE VALVE |
| | CHECK VALVE |
| | ANGLE VALVE |
| | BACKFLOW PREVENTER |
| PRV | PRESSURE REDUCING VALVE (PRV) |
| | HUB DRAIN (HD) |
| | PLUG VALVE (PV) |
| S | SOLENOID VALVE (SV) |
| M | MOTORIZED VALVE (MV) |
| | FLOAT VALVE (FV) |
| | TEMPERATURE & PRESSURE RELIEF VALVE (T&P) |
| | AUTOMATIC CONTROL VALVE (ACV) |
| | THERMOSTATIC MIXING VALVE (TMV)<br>THERMOSTIC TEMPERING VALVE (TTY) |
| | MANUAL AIR VENT (MAV) |
| | AUTOMATIC AIR VENT (AAV) |
| | PIPE UP UNLESS OTHERWISE NOTED |
| | PIPE DOWN UNLESS OTHERWISE NOTED |
| | THREE-WAY MIXING VALVE |

| SYMBOL | DESCRIPTION |
|---|---|
| LOW HIGH | DROP OR RISE |
| | TOP CONNECTION |
| | BOTTOM CONNECTION |
| | WATER HAMMER ARRESTER (SIZE A) |
| | VALVE IN VERTICAL (VIV) |
| | SQUARE FEET (SQ FT) |
| CO | CLEANOUT |
| WCO | WALL CLEANOUT WITH WALL PLATE |
| FCO | FLOOR CLEANOUT |
| FCOD | FLOOR CLEANOUT WITH DECK PLATE |
| CA | COMPRESSED AIR PIPING |
| | HOSE BIBB |
| AC | ACCESS DOOR |
| | INCREASER/REDUCER (ECCENTRIC) |
| | INCREASER/REDUCER (CONCENTRIC) |
| | CAPPED PIPE |
| | FLOOR DRAIN, ROOF DRAIN (FD,RD) |
| | WALL HYDRANT (WH) |
| | PIPE ANCHOR |
| | PIPE GUIDE |
| | SHOCK ABSORBER (SA) |
| | VACUUM BREAKER (VB) |
| | VALVED AND CAPPED OUTLET |
| | SHOWER HEAD ASSEMBLY |
| | FRESH AIR INLET (FAI) |
| FCOD | FLOOR CLEANOUT WITH DECK PLATE |
| | RUNNING TRAP WITH CLEANOUT (RTCO) |
| | RUNNING TRAP (RT) |
| | CIRCULATOR (CIRC) |
| | FIXED AIR GAP |
| A | AQUASTAT (A) |
| T | THERMOMETER (T) |
| SYSTEM NO. | RISER DESIGNATION |
| | VENT THROUGH ROOF (VTR) |
| | PRESSURE GAUGE (PG) |

| SYMBOL | DESCRIPTION |
|---|---|
| | STRAINER |
| | UNION |
| | RATE OF FLOW INDICATOR |
| | FLEXIBLE CONNECTION |
| | ACID FLOOR DRAIN (AFD) |
| | QUICK DISCONNECTION FITTING |
| | QUICK DISCONNECTION FITTING (DOUBLE CONNECTION TYPE) |
| | GLOBE VALVE |
| | POINT OF CONNECTION |

NOTE:
THIS IS A GENERAL LIST OF ABBREVIATIONS AND SYMBOLS. NOT ALL ENTRIES MAY APPLY TO THIS PROJECT.

US Army Corps of Engineers
New York District

| Symbol | Description | Date | Appr |
|---|---|---|---|

U.S. ARMY ENGINEER DISTRICT
CORPS OF ENGINEERS
NEW YORK, NEW YORK

Designed by: | Date: | Size | Rev.
Dwn by: | Ckd by: | Drawing file no.:
Reviewed by: | Drawing code:
Submitted by: | Plot date: 05-JAN-2006 16:32 | Plot by: eahdwb | Scale: 0.00250:1.000000

File name: S:\Monroe\military\fort hamilton\dPlbg\Mechanical\dPlbg_P-001.dgn

P/N 82024
MILITARY PUBLIC SALE STATION
FORT HAMILTON, NY

SYMBOLS & ABBREVIATIONS
PLUMBING

Sheet reference number:
P–001

Plot Date: 05-JAN-2006 16:32
Plot By: eahdwb
Submitted by: eahdwb
S:\Monroe\MilitaryPort Hamilton\dPlbg\Mechanical\dPlbg_P-001.dgn

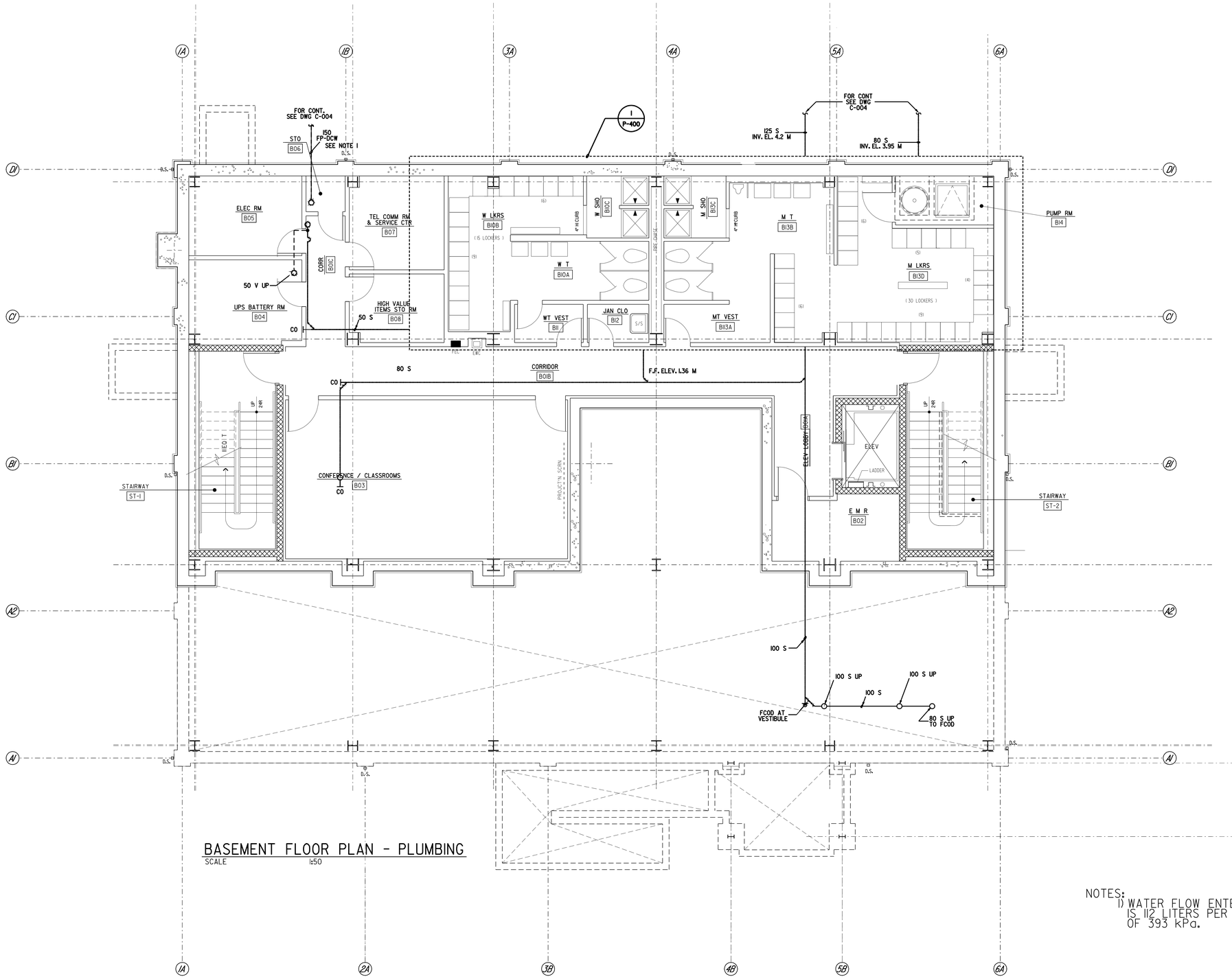


## BASEMENT FLOOR PLAN - PLUMBING

SCALE 1:50

NOTES:
1) WATER FLOW ENTERING THE BUILDING IS 112 LITERS PER SECOND AT A PRESSURE OF 393 kPa.

GRAPHIC SCALE

1000mm 0 1M 2M 3M 4M 5M

SCALE 1:50

TRUE NORTH

PROJECT NORTH

NOTE: ALL DIMENSIONS SHOWN ARE IN MILLIMETERS UNLESS OTHERWISE NOTED.

US Army Corps of Engineers
New York District

| Symbol | Description | Date | Appr |
|---|---|---|---|

U.S. ARMY ENGINEER DISTRICT
NEW YORK, NEW YORK

Designed by:
Dwn by:
Ckd by:
Reviewed by:
Submitted by:
Date:
Size:
Rev:
Drawing file no.:
Drawing code:
Plot date: 05-JAN-2006 16:32
Plot by: ssmith
Scale: 50.0TM3761100000
File name: S:\Benson\military\fort hamilton\MPlan\Mechanical\MPlan_P-100.dgn

PH. 52224
MILITARY POLICE STATION
FORT HAMILTON, NY

# BASEMENT FLOOR PLAN PLUMBING

Sheet reference number:
P-100

Submitted by: ©Smedfeb
S:\Office\Smedfeb\Projects\hamilton\MPlan\Mechanical\MPlan_P-100.dgn
Plot Date: 05-JAN-2006 16:32

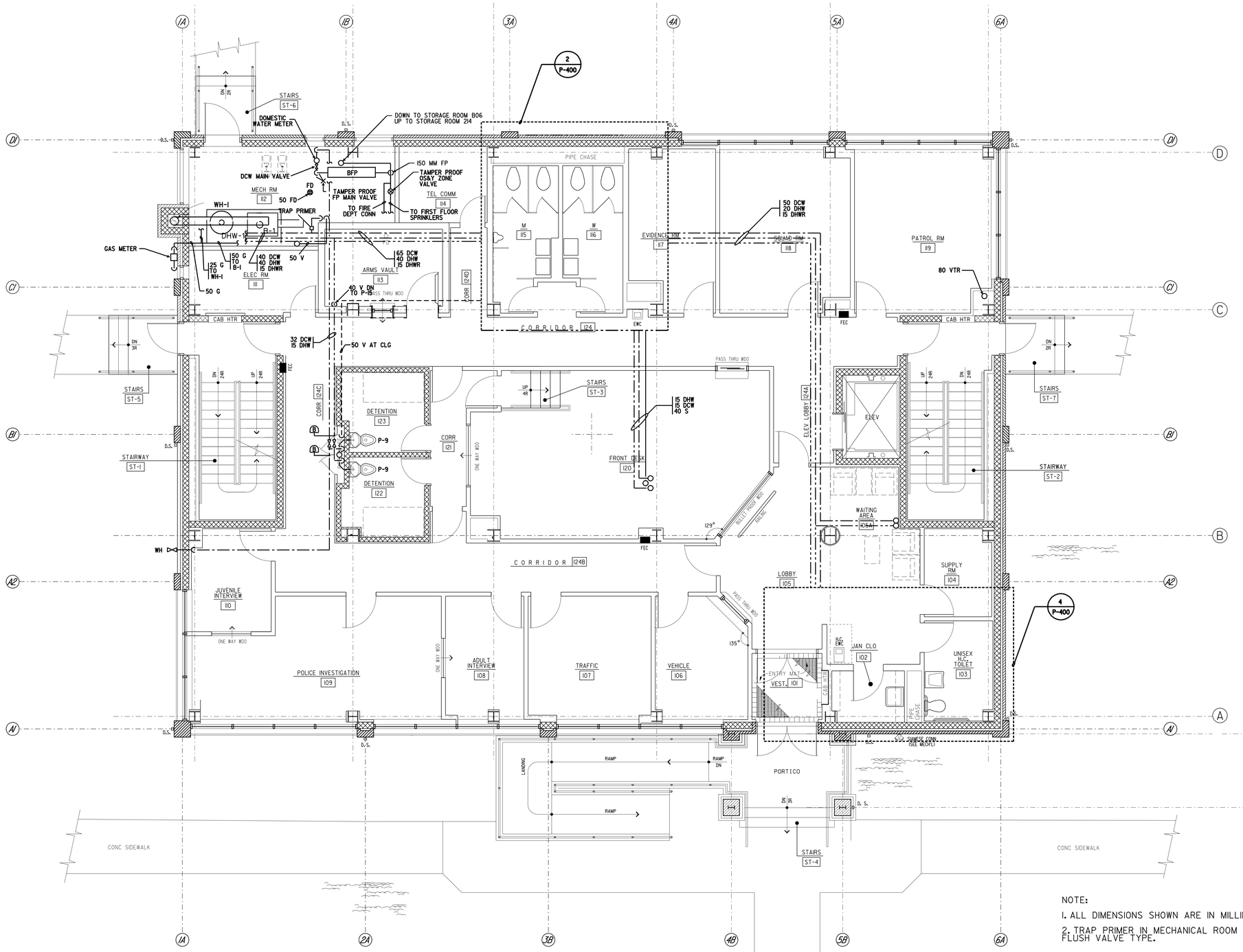


## FIRST FLOOR PLAN - PLUMBING

SCALE 1:50

NOTE:

1. ALL DIMENSIONS SHOWN ARE IN MILLIMETERS UNLESS OTHERWISE NOTED.
2. TRAP PRIMER IN MECHANICAL ROOM 112 SHALL BE A SOLONOID OPERATED FLUSH VALVE TYPE.

GRAPHIC SCALE

1000mm 0 1M 2M 3M 4M 5M

SCALE 1:50

TRUE NORTH

PROJECT NORTH

US Army Corps of Engineers
New York District

| Symbol | Description | Date | Appr. |
|---|---|---|---|

U.S. ARMY ENGINEER DISTRICT
CONTRACTS DIVISION
NEW YORK, NEW YORK

Designed by:
Dwn by:
Ckd by:
Reviewed by:
Submitted by:
Date:
Size: Rev:
Drawing file no:
Drawing code:
Plot date: 05-JAN-2006 16:32
Plot by: mcintosrw
Scale: 00-PORTR1-000000
File name: S:\Transport\military\Fort Hamilton\Official\Mechanical\Portra 8-101.dgn

PN: 82234
MILITARY POLICE STATION
FORT HAMILTON, NY

# FIRST FLOOR PLAN PLUMBING

Sheet reference number:
P-101

Submitted by: e3endfeb
S:\Project-Delivery\Project Hamilton\APS\Collection\Portra 8-101.dgn
Plot Date: 05-JAN-2006 16:32

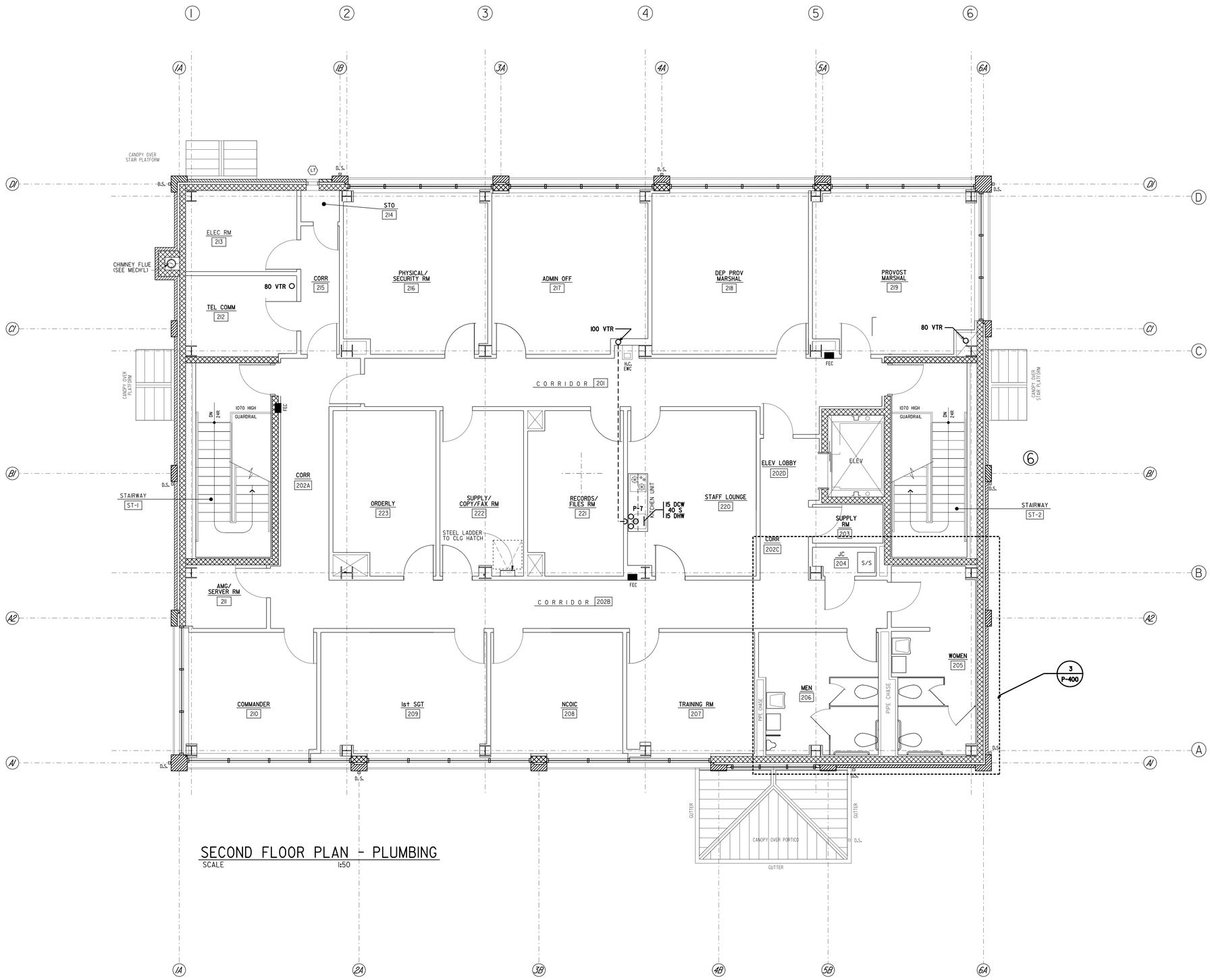


## SECOND FLOOR PLAN - PLUMBING

SCALE 1:50

GRAPHIC SCALE

1000mm 0 1M 2M 3M 4M 5M

SCALE 1:50

TRUE NORTH

PROJECT NORTH

NOTE: ALL DIMENSIONS SHOWN ARE IN MILLIMETERS UNLESS OTHERWISE NOTED.

US Army Corps of Engineers
New York District

| Symbol | Description | Date | Appr |
|---|---|---|---|

Designed by: | Date: | Size: | No.:
Dwn by: | Ckd by: | Drawing file no.:
Reviewed by: | Drawing code:
Submitted by: | Plot date: 05-JAN-2005 16:32 | Plot by: eLendHab | Scale: as shown/1:50000
File name: S:\Mission\military\Fort Hamilton\dwgs\Mechanical\p102.dgn

U.S. ARMY ENGINEER DISTRICT
CONTRACT DRAWINGS
NEW YORK, NEW YORK

PN. 8022a
MILITARY PUBLIC STATION
FORT HAMILTON, NY

SECOND FLOOR PLAN
PLUMBING

Sheet reference number:
P-102

Submitted by: eLendHab
Software:Bentley:Microstation V8 Plot Date: 05-JAN-2005 16:32
S:\Mission\military\Fort Hamilton\dwgs\Mechanical\p102.dgn

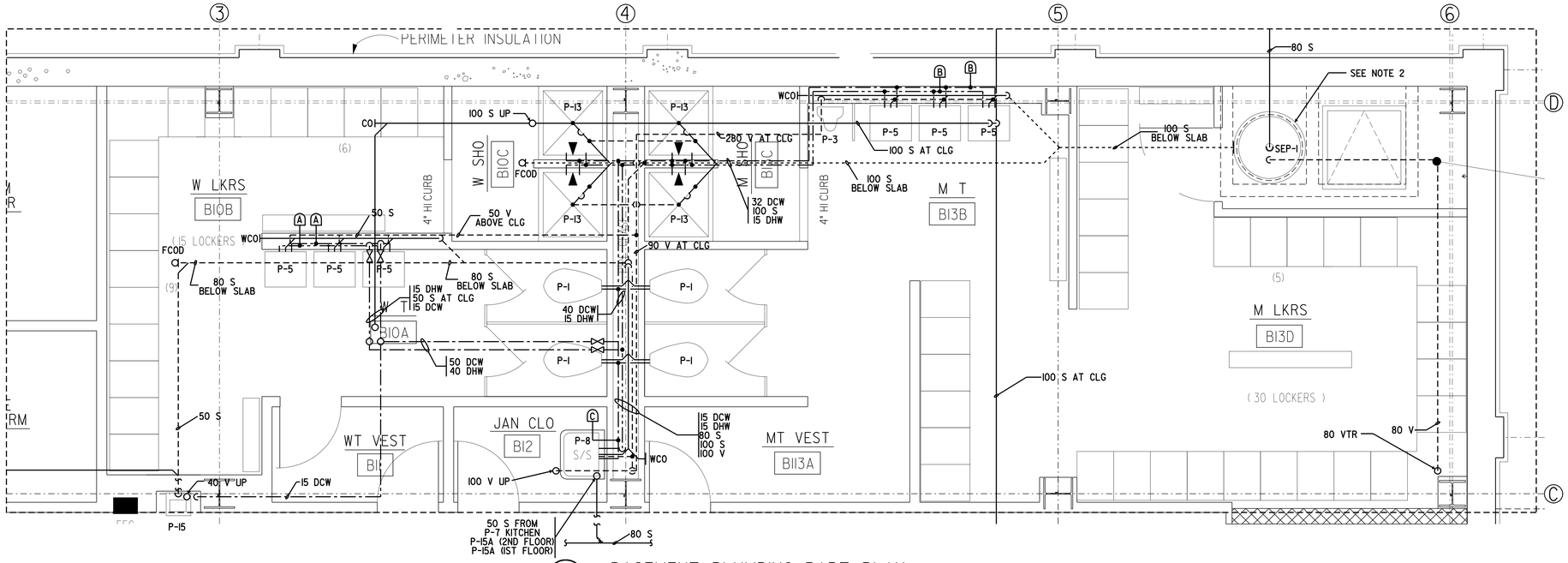


1 P-400 BASEMENT PLUMBING PART PLAN
SCALE 1:25

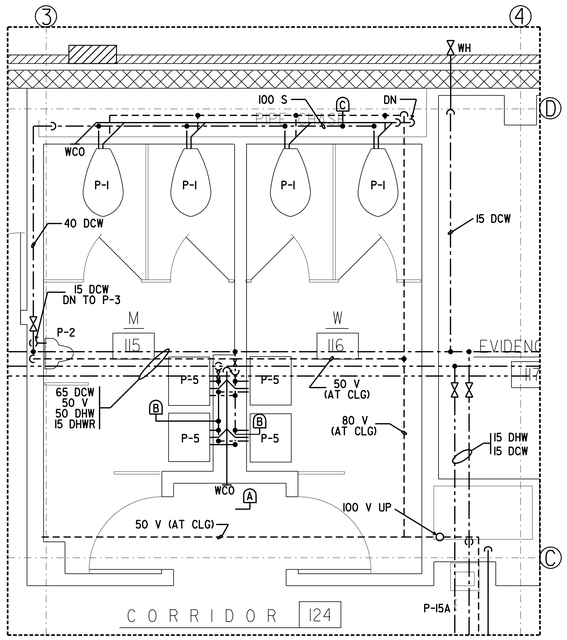


2 P-400 FIRST FLOOR PLUMBING PART PLAN
SCALE 1:25

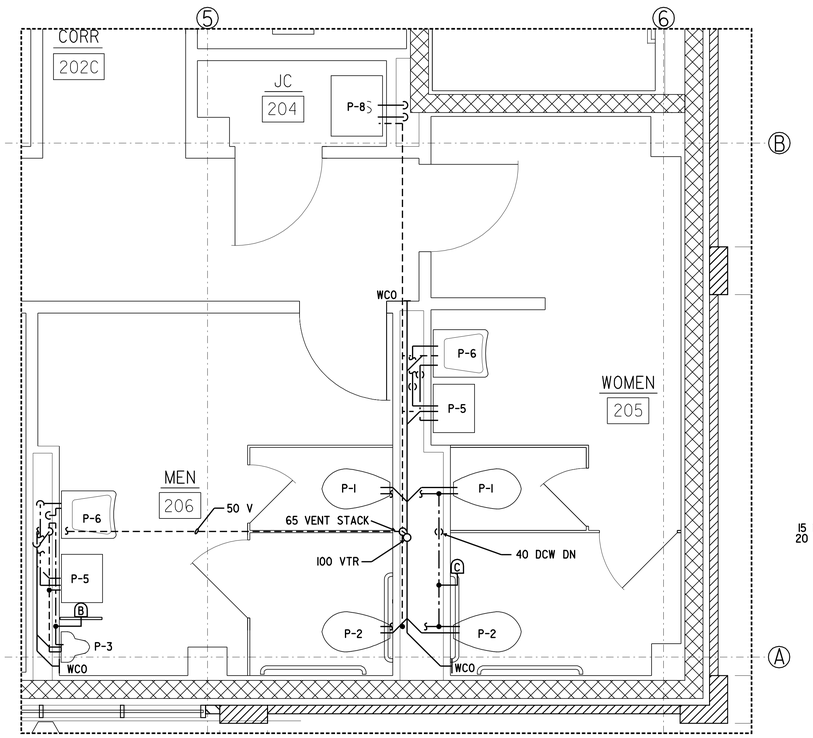


3 P-400 SECOND FLOOR PLUMBING PART PLAN
SCALE 1:25

NOTES
1) ALL DIMENSIONS ARE IN MILLIMETERS UNLESS OTHERWISE NOTED.
2) SIZE AND CONFIGURATION OF PIT SHALL MATCH BASIN PROVIDED. INSTALLATION OF SEWAGE EJECTOR SHALL BE PER MANUFACTURERS RECOMMENDATIONS.

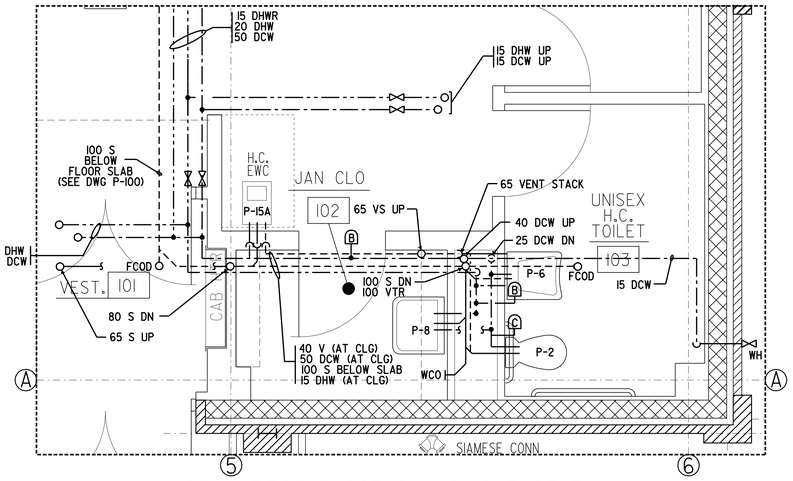


4 P-400 FIRST FLOOR PLUMBING PART PLAN
SCALE 1:25

NOTE: ALL DIMENSIONS SHOWN ARE IN MILLIMETERS UNLESS OTHERWISE NOTED.

US Army Corps of Engineers
New York District

| Rev. | Date | Description |
|---|---|---|

U.S. ARMY ENGINEER DISTRICT
CORPS OF ENGINEERS
NEW YORK, NEW YORK

Designed by:
Dwn by:
Ckd by:
Reviewed by:
Submitted by:
Date:
Drawing file no:
Drawing code:
Plot date: 05-JAN-2005 16:32
Plot by: e3endfeb
Scale: 6x1.414(841)1:100000
File name: S:\Secured\Military\Fort Hamilton\MPlan\Mechanical\Utilities_P-400.dgn

PLUMBING PART PLANS

Sheet reference number:
P-400

Submitted by: e3endfeb
Plot Date: 05-JAN-2005 16:32
S:\Secured\Military\Fort Hamilton\MPlan\Mechanical\Utilities_P-400.dgn

# GENERAL NOTES:

## DESIGN LOADS

FIRST FLOOR LIVE LOAD - MINIMUM 4.8 KN/M$^2$
SECOND FLOOR LIVE LOAD - MINIMUM 3.8 KN/M$^2$
FIRST AND SECOND FLOOR DEAD LOAD - MINIMUM 2.2 KN/M$^2$
ROOF LIVE LOAD - MINIMUM 1 KN/M$^2$
ROOF DEAD LOAD - MINIMUM 1.2 KN/M$^2$

| | | |
|---|---|---|
| SNOW LOAD | | |
| GROUND SNOW LOAD | 1.0 KN/M$^2$ | |
| FLAT ROOF SNOW LOAD | 1.2 KN/M$^2$ | |
| SLOPED ROOF SNOW LOAD | 1.2 KN/M$^2$ | |
| MAX. DRIFT SNOW LOAD | 1.9 KN/M$^2$ | AT MAIN ENTRANCE CANOPY |
| MAX. VALLEY SNOW LOAD | 2.2 KN/M$^2$ | AT DORMERS |
| UNBALANCED SNOW LOAD | | |
| LEEWARD SIDE | 2.3 KN/M$^2$ | |
| WINDWARD SIDE | .4 KN/M$^2$ | |
| SLIDING SNOW | | |
| REAR CANOPY | 3.1 KN/M$^2$ | |
| SIDE CANOPIES | 1.8 KN/M$^2$ | |
| FROST DEPTH | 965 MM | |
| WIND FACTORS WITH LOADS | | |
| IMPORTANCE FACTOR | 1.15 | |
| EXPOSURE CATEGORY | B | |
| BASIC WIND SPEED | 52 M/S | |
| GUST FACTOR | .85 | |
| INTERNAL PRESSURE COEFFICIENTS | | |
| FOR PARTIALLY ENCLOSED BUILDING | +.55 -.55 | |
| BUILDING CATEGORY | IV | |
| WALL PRESSURE- WORSE CASE WINDWARD | - 1.7 KN/M$^2$ | |
| WALL PRESSURE- WORSE CASE LEEWARD | - 1.3 KN/M$^2$ | |
| ROOF PRESSURE- ROOF UPLIFT | - 1.8 KN/M$^2$ | |
| ROOF PRESSURE- ROOF DOWNWARD | - .7 KN/M$^2$ | |
| SEISMIC FACTORS | | |
| SEISMIC USE GROUP | III | |
| OCCUPANCY IMPORTANCE FACTOR | 1.5 | |
| SITE CLASSIFICATION "D" STIFF SOIL | | |
| Ss = .42g | | |
| S1 = .09g | | |
| SOIL BEARING CAPACITY | 168 KN/M$^2$ | |

## REINFORCED CONCRETE:

| | |
|---|---|
| CONCRETE | 30 MPa - FOUNDATION WALL AND FOOTINGS |
| CONCRETE | 25 MPa @ 28 DAYS, NORMAL WEIGHT: SLAB ON GRADE |
| REINFORCING | ASTM A615 GRADE 60 |
| WELDED WIRE FABRIC | ASTM A185 |

1. CONCRETE WORK SHALL CONFORM TO ACI 318-02, "BUILDING CODE REQUIREMENTS FOR REINFORCED CONCRETE".
2. MINIMUM OF 72 HOURS SHALL ELAPSE BETWEEN ADJACENT CONCRETE PLACEMENTS SEPARATED BY CONSTRUCTION JOINTS.
3. REINFORCING LAP SPLICES SHALL BE PLACED ONLY WHERE INDICATED OR CALLED FOR UNLESS OTHERWISE APPROVED BY THE CONTRACTING OFFICER.
4. MINIMUM COVER FOR CONCRETE REINFORCEMENT:EXPOSED TO EARTH OR WEATHER - 38 MM
   CAST AGAINST AND PERMANENTLY EXPOSED TO EARTH - 75MM
5. 125 mm THICK CONCRETE SLAB FOR BASEMENT AND FIRST FLOOR SLABS.

## STRUCTURAL STEEL:

1. STRUCTURAL STEEL WORK SHALL CONFORM TO THE AISC "SPECIFICATION FOR STRUCTURAL STEEL BUILDINGS - ALLOWABLE STRESS DESIGN (ASD)
2. CONTRACTOR SHALL DESIGN MOMENT CONNECTIONS TO DEVELOP THE FULL ELASTIC MOMENT CAPACITY OF THE GIRDER.
3. ALL GROOVE WELDS SHALL BE FULL PENETRATION.
4. WHERE FILLET WELD SIZE IS NOT SHOWN, MINIMUM SIZE SHALL BE 5MM.
5. ALL WELDS SHALL BE SHOP WELDS (TYPICAL UNLESS OTHERWISE SHOWN OR APPROVED).
6. STRUCTURAL FRAMES SHALL BE SPECIAL MOMENT RESISTING FRAMES.
7. SPECIFICATION A992 SHALL BE USED. GRADE 50 STEEL.
8. PREQUALIFIED CONNECTIONS ARE TO BE USED IN ACCORDANCE WITH FEMA 302, 350 AND 353.
9. ◀ SIGNIFIES MOMENT CONNECTION ON STEEL FRAMING PLANS.
10. COLUMN ANCHOR BOLTS - ASTM A449

## OPEN WEB STEEL JOISTS:

TYPE K AND LH SERIES

1. OPEN WEB JOISTS SHALL CONFORM TO THE STEEL JOIST INSTITUTE STANDARD SPECIFICATIONS FOR OPEN WEB STEEL JOISTS
2. MANUFACTURER SHALL VERIFY JOIST SIZES SHOWN ARE ADEQUATE AT THE SLOPE AND SPANS INDICATED ON THE PLAN. JOIST CHORDS AND WEB MEMBERS SHALL BE INCREASED IN SIZE AS REQUIRED.
3. MANUFACTURER SHALL VERIFY JOIST SIZES SHOWN ARE ADEQUATE TO SUPPORT MECHANICAL EQUIPMENT AS INDICATED ON MECHANICAL DRAWINGS. VERIFY LOADING OF EQUIPMENT TO BE INSTALLED AT THEIR APPROPRIATE LOCATION.

## METAL DECKS:

DEPTH: 38mm
FLOOR DECK: B LOCK, 22 GAGE, 100 mm CONCRETE SLAB THICKNESS (115 PCF). WIRE MESH 152X152 MW9XMW9
ARMS ROOM DECK: INVERTED B LOCK, 22 GAGE, 240 mm CONCRETE SLAB THICKNESS (145 PCF).
ROOF DECK: B LOCK, 16 GAGE, TRIPLE SPAN

1. ROOF DECK SHALL CONFORM TO THE "SPECIFICATIONS FOR THE DESIGN OF COLD FORMED STEEL STRUCTURAL MEMBERS" 1997 (AISI) AND TO THE "DESIGN MANUAL FOR COMPOSITE DECKS, ROOF DECKS, AND CELLULAR METAL FLOOR DECK WITH ELECTRICAL DISTRIBUTION," PUBLICATION NO. 29, 1995 (SDI).
2. ROOF DECK SHALL BE ATTACHED TO STEEL SUPPORTS WITH 19mm DIA. PUDDLE WELDS @ 305mm o.c. SIDE SEAMS TO BE BUTTON PUNCHED @ 305mm o.c.
3. METAL DECKS TO BE DESIGNED AS DIAPHRAGMS.
4. VERIFY DECKS SELECTED ARE ADEQUATE FOR LOADS AND BEAM/TRUSS SPANS SHOWN ON DRAWINGS.

## REINFORCED MASONRY:

| | |
|---|---|
| CONCRETE MASONRY UNITS | ASTM C90 GRADE N-1 NORMALWEIGHT UNITS |
| MORTAR | ASTM C270 TYPE S |
| JOINT REINFORCEMENT | LADDER TYPE FOR CAVITY WALLS, TRUSS TYPE FOR SINGLE WYTHE WALLS |

1. HORIZONTAL JOINT REINFORCEMENT SHALL BE EXTRA HEAVY 5MM SIDE RODS, NO. 9 GAGE CROSS RODS.
2. LAP SPLICES SHALL BE THE GREATER OF 40 BAR DIAMETERS OR 610 MM O.C. LAP SPLICES SHALL BE STAGGERED.
3. ALL CELLS RECEIVING ANCHOR BOLTS SHALL BE GROUTED SOLID 2 COURSES VERTICALLY MIN.
4. CMU WALLS SHALL HAVE A BOND BEAM WITH 2-#16 AT THE TOP COURSE OR NEXT TO THE TOP COURSE.
5. LINTELS SHALL HAVE A MINIMUN 200 MM BEARING EACH SIDE. STEEL LINTELS EXPOSED TO WEATHER SHALL BE GALVANIZED.
6. OPENINGS IN CMU WALLS SHALL BE REINFORCED WITH 2-#16 VERTICAL ON EACH SIDE OF OPENING FOR FULL HEIGHT OF WALL, AND 2-#16 HORIZONTAL AT TOP AND BOTTOM EXTENDING 610 MM PAST OPENING. LINTEL BARS ABOVE THE OPENING MAY SERVE AS THE HORIZONTAL BARS. CELLS WITH REBARS MUST BE FILLED WITH GROUT.
7. AT EACH SIDE OF A CONTROL JOINT PROVIDE 2-#16 VERTICAL FOR FULL HEIGHT OF WALL. FOR LOCATIONS AND DETAIL OF CONTROL JOINTS SEE ARCHITECTURAL DRAWINGS.
8. ALL MASONRY REINFORCEMENT SHALL BE PLACED USING WIRE CENTERING AND CAGING CLIPS TO ENSURE PROPER SPACING.
9. VERTICAL REINFORCEMENT:
   #16 @ 610 mm ON CENTER
   AT STAIR TOWER AND ELEVATOR SHAFT - #16 @ 203 mm ON CENTER (IN EVERY CELL).
10. PROVIDE BRACING ANGLES WITH SLIP CONECTION AT EACH FLOOR LEVEL BETWEEN MASONRY BOND BEAM AND BUILDING STRUCTURAL STEEL INCLUDING ELEVATOR SHAFT AND STAIR TOWER.

NOTE: ALL DIMENSIONS SHOWN ARE IN MILLIMETERS.

US Army Corps of Engineers
New York District

| Symbol | Description | Date | Appr. |
|---|---|---|---|

U.S. ARMY ENGINEER DISTRICT
CORPS OF ENGINEERS
NEW YORK, NEW YORK

Designed by: JLW
Date:
Size:
Rev.:
Dwn by: JLW
Ckd by:
Reviewed by:
Drawing file no.:
Drawing code:
Submitted by:
Plot date: 05-JAN-2005 16:32
Plot by: edavidwa
Style: ACADDWG.CTB
File name: J:\Mission\Military\Fort Hamilton\Military Barracks\Military S-001.dgn

PN. 52224
MILITARY POLICE STATION
FORT HAMILTON, NY

GENERAL NOTES

Sheet reference number:
S-001

Submitted by: edavidwa
Plot Date: 05-JAN-2005 16:32
Plot by: edavidwa
Style: ACADDWG.CTB
File name: J:\Mission\Military\Fort Hamilton\Military Barracks\Military S-001.dgn

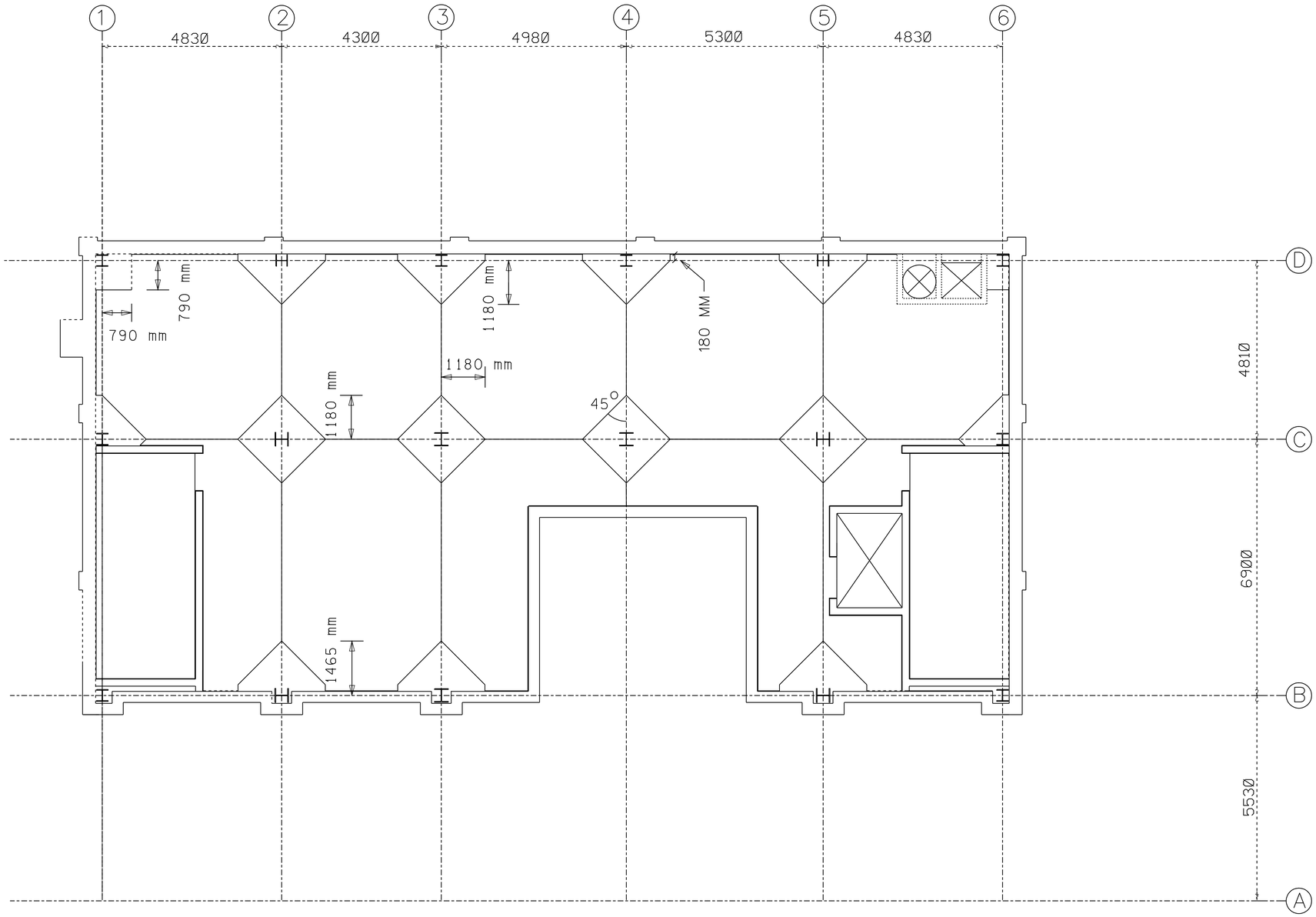


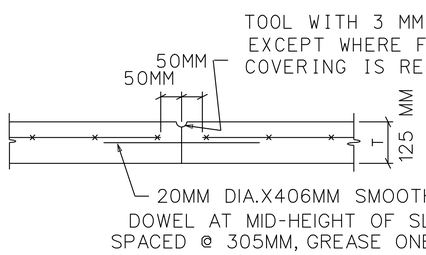


TYPICAL SLAB CONSTRUCTION JOINT

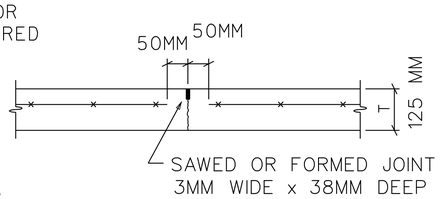


TYPICAL SLAB CONTRACTION JOINT

N.T.S.

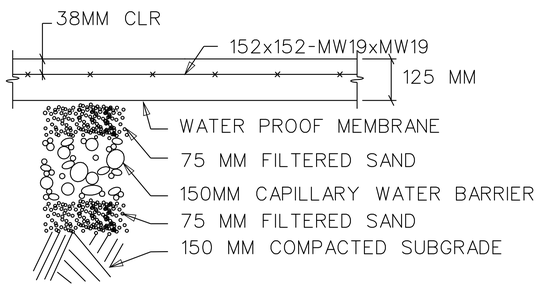


TYPICAL SLAB ON GRADE AT BASEMENT

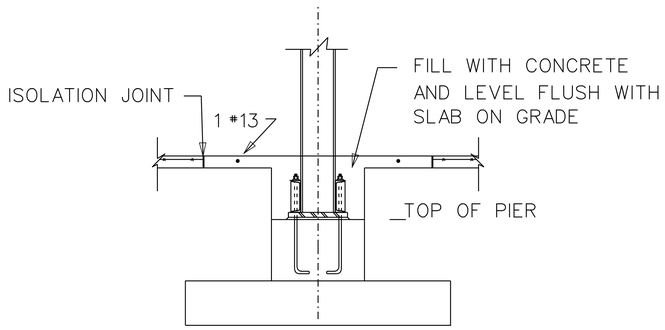


TYPICAL SLAB AT COLUMN LOCATIONS

NOTE: ALL DIMENSIONS SHOWN ARE IN MILLIMETERS.

US Army Corps of Engineers
New York District

| Symbol | Description | Date | App. |
|---|---|---|---|

U.S. ARMY ENGINEER DISTRICT
CORPS OF ENGINEERS
NEW YORK, NEW YORK

Designed by: JLW
Dwn by: JLW
Ckd by:
Reviewed by:
Submitted by:
Date:
Size:
Rev.:
Drawing file no.:
Drawing code:
Plot date: 05-JAN-2005 16:32
Plot by: edwardsw
Scale: 1:0000000000
File name: S:\Branch\Military\Ft Hamilton\Military Structure\Plans & S-100.dgn

PN 52224
MILITARY POLICE STATION
FORT HAMILTON, NY

# BASEMENT SLAB PLAN

Sheet reference number:
S-100

Plot Date: 05-JAN-2005 16:32
S:\Branch\Military\Ft Hamilton\Military Structure\Plans & S-100.dgn

Submitted by: edwardsw
petticordsamillo:pw01 hamiltonwp01\sa01\structure\plans

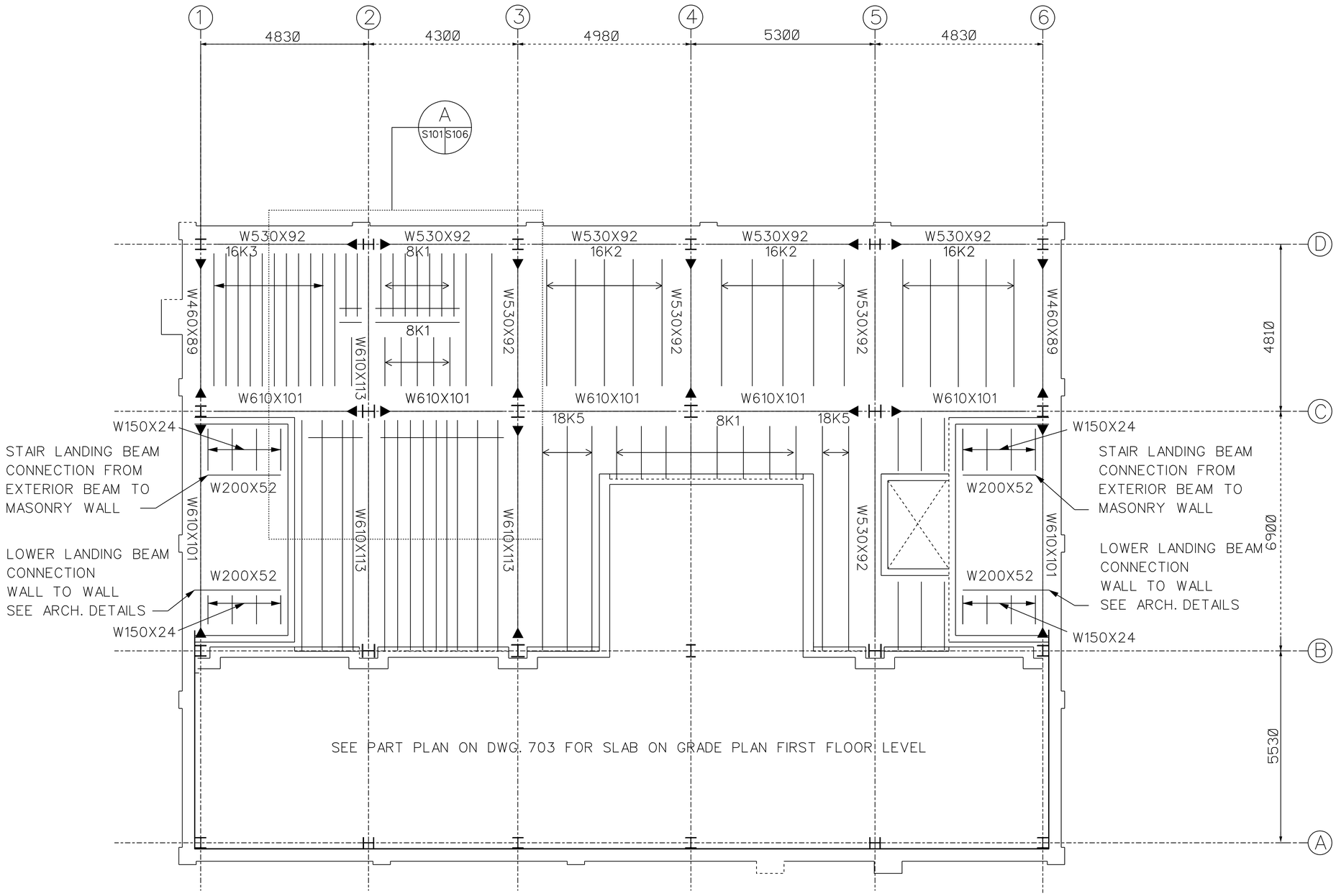


NOTE: ALL DIMENSIONS SHOWN ARE IN MILLIMETERS.

US Army Corps of Engineers
New York District

U.S. ARMY ENGINEER DISTRICT
CORPS OF ENGINEERS
NEW YORK, NEW YORK

Designed by: JLW
Dwn by: JLW
Ckd by:
Reviewed by:
Submitted by:
Date:
Size:
Rev:
Drawing file no.:
Drawing code:
Plot date: 05-JAN-2006 16:32
Plot by: ADAMSHO
Date: 20-JUN-2006

File name: S:\Mission\military\fortharrison\MPBs\Structural\MPBs_S-101.dgn

PN 52224
MILITARY POLICE STATION
FORT HARRISON, IN

# FIRST FLOOR FRAMING PLAN

Sheet reference number:
S-101

Submitted by: eXtendTech
Software: Microstation V8 XM Build 08.11.09.618
Plot Date: 05-JAN-2006 16:32

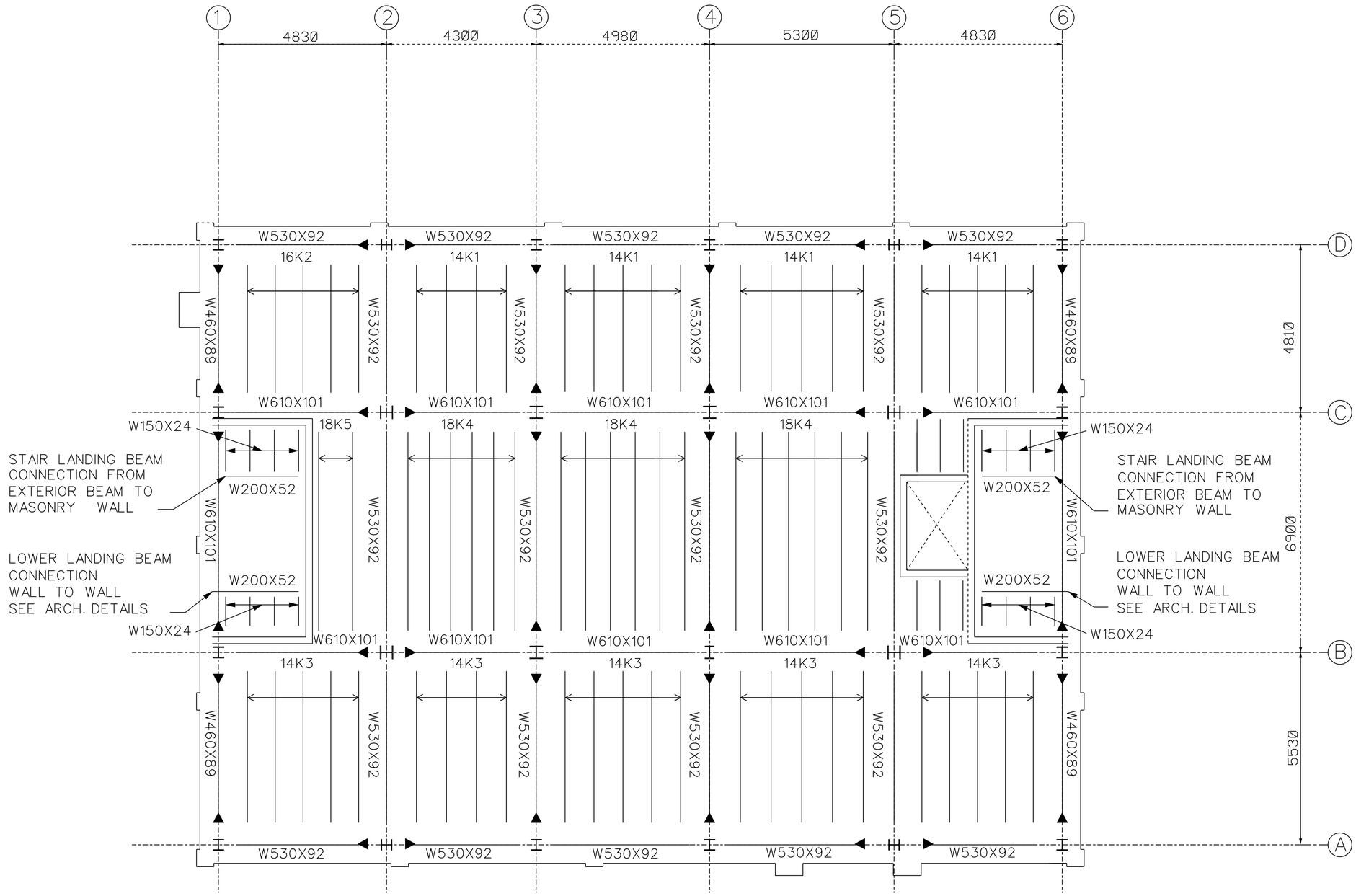


NOTE: ALL DIMENSIONS SHOWN ARE IN MILLIMETERS.

US Army Corps of Engineers
New York District

| Symbol | Description | Date | Appr. |
|---|---|---|---|

| Rev. | Date | Description | By |
|---|---|---|---|

U.S. ARMY ENGINEER DISTRICT
CORPS OF ENGINEERS
NEW YORK, NEW YORK

Designed by: JLW
Dwn by: JLW
Ckd by:
Reviewed by:
Submitted by:
Date:
Size:
Rev:
Drawing file no.:
Drawing code:
Plot date: 05-JAN-2005 16:32
Plot by: adandreo
Size: 8000x5000
File name: S:\Denver\military\Fort Hamilton\Utility Services\Utility S-102.dgn

PN 52224
MILITARY POLICE STATION
FORT HAMILTON, NY

# SECOND FLOOR FRAMING PLAN

Sheet reference number:
S-102

Plot Date: 05-JAN-2005 16:32
Submitted by: adandreo

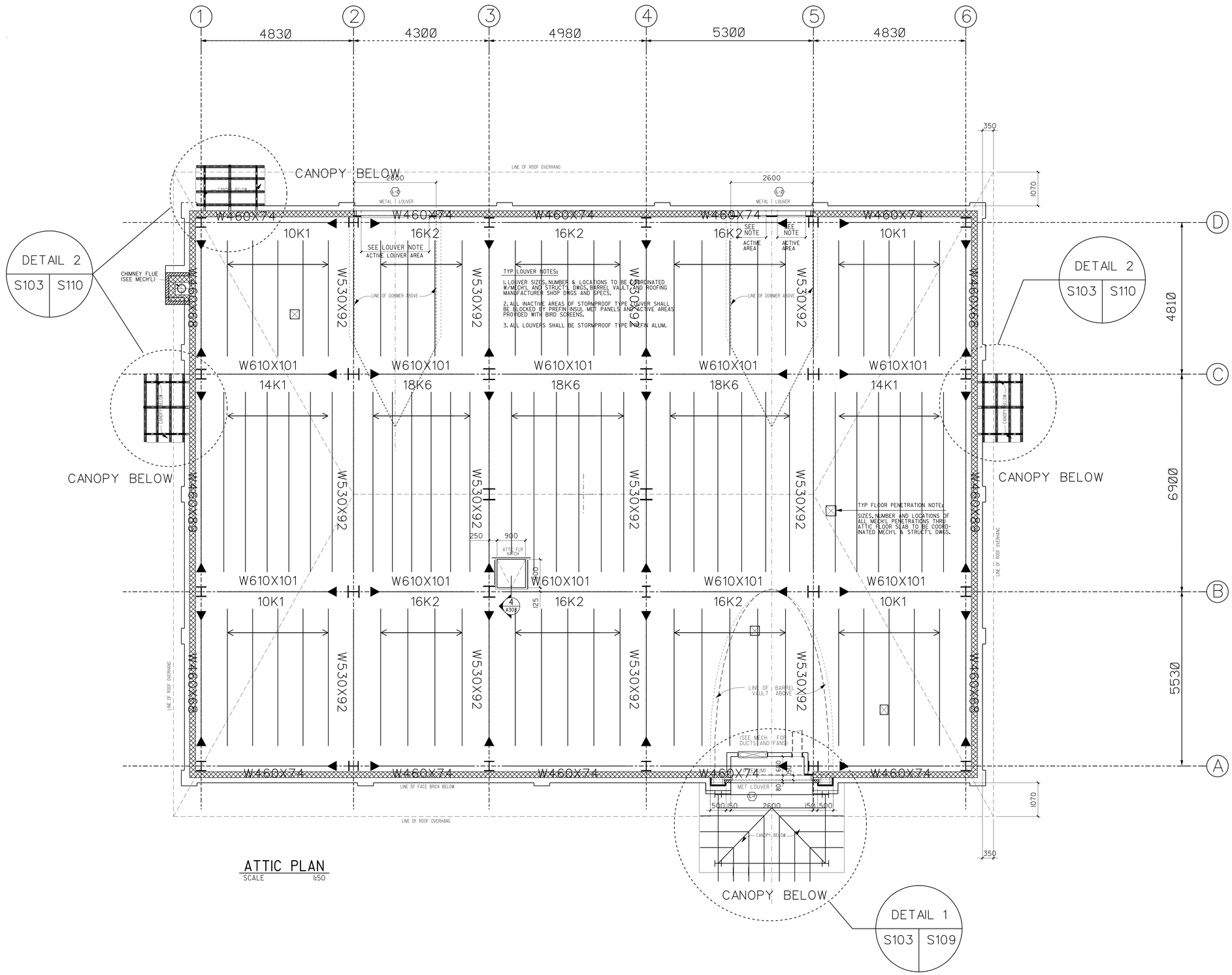


## ATTIC PLAN

SCALE 1:50

NOTE: ALL DIMENSIONS SHOWN ARE IN MILLIMETERS.

US Army Corps of Engineers
New York District

| Symbol | Description | Date | App. |
|---|---|---|---|

| Rev. | Size | Date: | Designed by: JLW | Dwn by: JLW | Ckd by: | Reviewed by: | Submitted by: |
|---|---|---|---|---|---|---|---|

Drawing file no:
Drawing code:
Plot date: 05-JAN-2005 16:32
Plot by: eDenaHwa
Scale: 1:50(A0)/1:100(A1)
File name: S:\Memorial\Military\Fact\Hamilton\MPBs\Structural\MPB4_S-103.dgn

U.S. ARMY ENGINEER DISTRICT
CORPS OF ENGINEERS
NEW YORK, NEW YORK

PN 52224
MILITARY POLICE STATION
FORT HAMILTON, NY

# ATTIC FLOOR FRAMING PLAN

Sheet reference number:
S-103

Submitted by: eDenaHwa
Path: S:\Memorial\Military\Fact\Hamilton\MPBs\Structural\MPB4_S-103.dgn
Plot Date: 05-JAN-2005 16:32

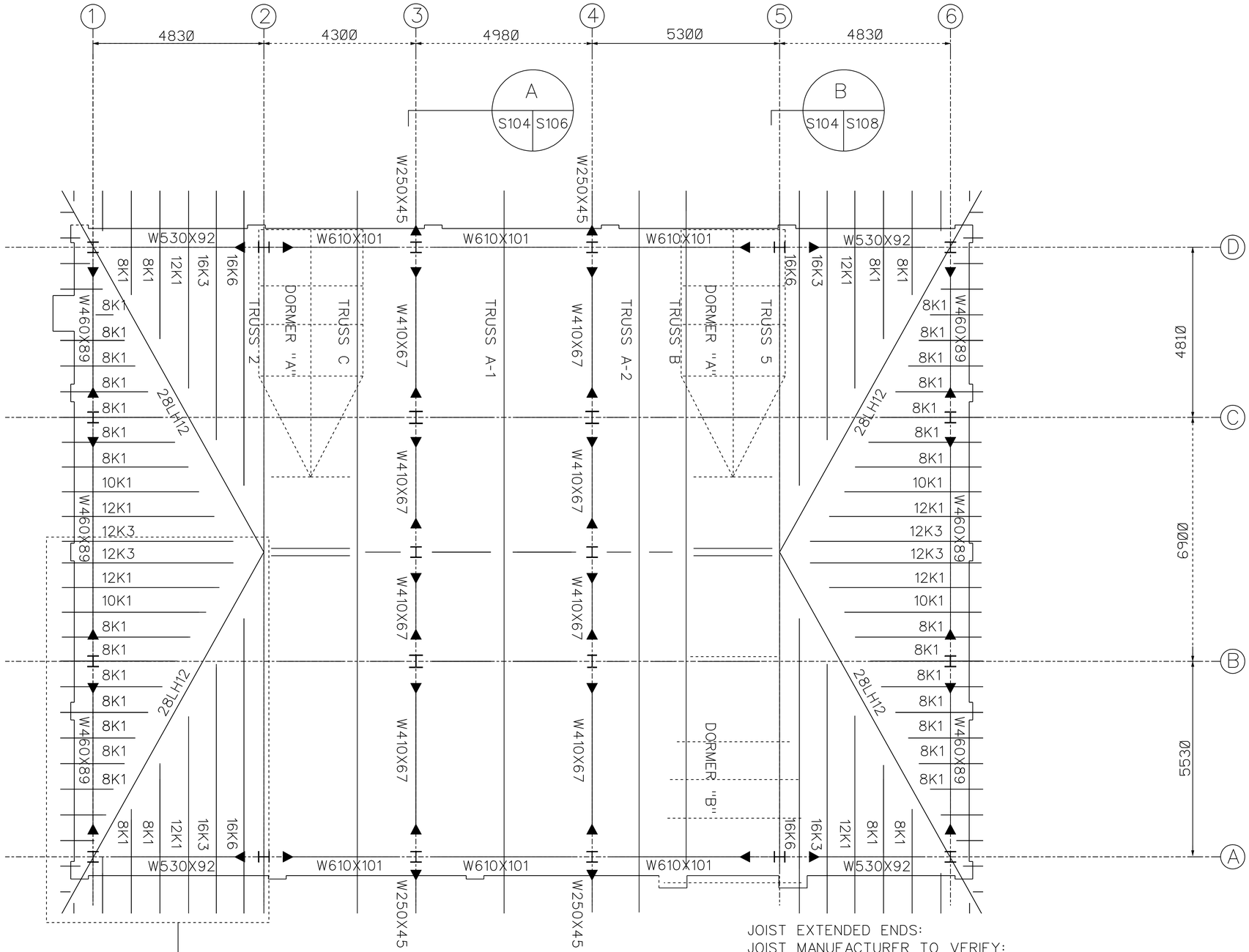


JOIST EXTENDED ENDS:
JOIST MANUFACTURER TO VERIFY:
1710 mm = R12
1160 mm = R10
915 mm OR LESS = R2

SEE DWG. S107 FOR DORMER DETAILS.

NOTE: ALL DIMENSIONS SHOWN ARE IN MILLIMETERS.

US Army Corps of Engineers
New York District

| Symbol | Description | Date | Appr. |
|---|---|---|---|

U.S. ARMY ENGINEER DISTRICT
CORPS OF ENGINEERS
NEW YORK, NEW YORK

Designed by: JLW
Dwn by: JLW
Ckd by:
Reviewed by:
Submitted by:
Date:
Size:
Rev.:
Drawing file no.:
Drawing code:
Plot date: 05-JUN-2005 16:33
Plot for: 40mm4vb
Scale: 60.000000000000

File name: S:\Benson\military\fortHamilton\MPDs\Structural\MPDs S-104.dgn

PN 52224
MILITARY POLICE STATION
FORT HAMILTON, NY

# ROOF FRAMING PLAN

Sheet reference number:
S-104

Submitted by: e3endfab
Plot Date: 05-JUN-2005 16:33
Settings: admin:User:fort Hamilton:pdf:Microstation:pdf:Sheet S-104A.cfg

| COLUMN MARK | 1A | 2A | 3A | 4A | 5A | 6A | 1B | 2B | 3B | 4B | 5B | 6B |
|---|---|---|---|---|---|---|---|---|---|---|---|---|
| TOP OF COLUMN | COORDINATE WITH DESIGN OF CONNECTION AND JOIST PLACEMENT | 8977 mm | 9301 mm | 9301 mm | 8977 mm | COORDINATE WITH DESIGN OF CONNECTION AND JOIST PLACEMENT | COORDINATE WITH DESIGN OF CONNECTION AND JOIST PLACEMENT | 8200 mm | 11145 mm | 11145 mm | 8200 mm | COORDINATE WITH DESIGN OF CONNECTION AND JOIST PLACEMENT |
| DESIGNATION<br>REF. FIN. FLOOR EL. = 0.0 | W12X72 (W310X107) | W12X72 (W310X107) | W12X72 (W310X107) | W12X72 (W310X107) | W12X72 (W310X107) | W12X72 (W310X107) | W12X96 (W310X143) | W14X120 (W360X179) | W14X120 (W360X179) | W14X82 (W360X122) | W14X120 (W360X179) | W12X96 (W310X143) |
| TOP PL.THICKNESS | | 13 mm | 13 mm | 13 mm | 13 mm | | 13 mm | | 13 mm | 13 mm | | 13 mm |
| BASE PL. SIZE L X W | 610 X 610 | 610 X 610 | 610 X 610 | 610 X 610 | 610 X 610 | 610 X 610 | 610 X 610 | 610 X 610 | 610 X 610 | 610 X 610 | 610 X 610 | 610 X 610 |
| BASE PL. SIZE THICK | 40 | 50 | 40 | 40 | 50 | 40 | 40 | 50 | 50 | 50 | 50 | 40 |
| BASE PLATE TYPE | A | B | A | A | B | A | A | B | B | B | B | A |
| PIER TYPE | 14 | 11 | 12 | 12 | 13 | 1 | 9 | 10 | 10 | 8 | 10 | 9 |
| FOOTING TYPE | A | C | A | A | C | A | B | D | C | C | E | B |
| TOP OF PIER ELEV. | –730 MM | –730 MM | –730 MM | –730 MM | –730 MM | –730 MM | –4860 MM | –4860 MM | –4860 MM | –730 MM | –4860 MM | –4860 MM |
| TOP OF FTG. ELEV. | –1365 MM | –1365 MM | –1365 MM | –1365 MM | –1365 MM | –1365 MM | –5495 MM | –5495 MM | –5495 MM | –1365 MM | –5495 MM | –5495 MM |

| COLUMN MARK | 1C | 2C | 3C | 4C | 5C | 6C | 1D | 2D | 3D | 4D | 5D | 6D |
|---|---|---|---|---|---|---|---|---|---|---|---|---|
| TOP OF COLUMN | COORDINATE WITH DESIGN OF CONNECTION AND JOIST PLACEMENT | 8200 mm | 10905 mm | 10905 mm | 8200 mm | COORDINATE WITH DESIGN OF CONNECTION AND JOIST PLACEMENT | COORDINATE WITH DESIGN OF CONNECTION AND JOIST PLACEMENT | 8977 mm | 9301 mm | 9301 mm | 8977 mm | COORDINATE WITH DESIGN OF CONNECTION AND JOIST PLACEMENT |
| DESIGNATION<br>REF. FIN. FLOOR EL. = 0.0 | W12X96 (W310X143) | W14X90 (W360X134) | W14X90 (W360X134) | W14X90 (W360X134) | W14X90 (W360X134) | W12X96 (W310X143) | W12X72 (W310X107) | W12X72 (W310X107) | W12X72 (W310X107) | W12X72 (W310X107) | W12X72 (W310X107) | W12X72 (W310X107) |
| TOP PL.THICKNESS | 13 mm | | 13 mm | 13 mm | | 13 mm | | 13 mm | 13 mm | 13 mm | 13 mm | |
| BASE PL. SIZE L X W | 610 X 610 | 610 X 610 | 610 X 610 | 610 X 610 | 610 X 610 | 610 X 610 | 610 X 610 | 610 X 610 | 610 X 610 | 610 X 610 | 610 X 610 | 610 X 610 |
| BASE PL. SIZE THICK | 40 | 50 | 50 | 50 | 50 | 40 | 40 | 50 | 40 | 40 | 50 | 40 |
| BASE PLATE TYPE | A | B | B | B | B | A | A | B | A | A | B | A |
| PIER TYPE | 7 | 8 | 8 | 8 | 8 | 7 | 1 | 2 | 3 | 4 | 5 | 6 |
| FOOTING TYPE | F | D | C | C | D | F | A | C | G | G | C | H |
| TOP OF PIER ELEV. | –4860 MM | –4860 MM | –4860 MM | –4860 MM | –4860 MM | –4860 MM | –4860 MM | –4860 MM | –4860 MM | –4860 MM | –4860 MM | –4860 MM |
| TOP OF FTG. ELEV. | –5495 MM | –5495 MM | –5495 MM | –5495 MM | –5495 MM | –5495 MM | –5495 MM | –5495 MM | –5495 MM | –5495 MM | –5495 MM | –6230 MM |

| FOOTING TYPE | SIZE (MM) | REINFORCEMENT |
|---|---|---|
| A | 2135X2135 | #25@305MM O.C.E.W. |
| B | 2745X2135 | #25@305MM O.C.E.W. |
| C | 2745X2745 | #25@305MM O.C.E.W. |
| D | 3660X2745 | #25@305MM O.C.E.W. |
| E | 4205X2745 | #25@305MM O.C.E.W. |
| F | 3050X2135 | #25@305MM O.C.E.W. |
| G | 2440X2440 | #25@305MM O.C.E.W. |
| H | 4265X2440 | #25@305MM O.C.E.W. |
| THICKNESS A,B,C,F,G FOOTINGS – 460 MM | | |
| THICKNESS D,E,H FOOTINGS – 610 MM | | |
| PILASTER FOOTING | 1220X1220 460MM–TH. | #22@305MM O.C.E.W. |

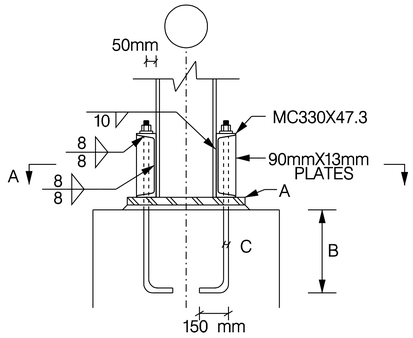


TYPE A
A–610mmX610mmX40mm
B–430mm
C–4 (25mm)

TYPE B
A–610mmX610mmX50mm
B–560mm
C–6 (32mm)

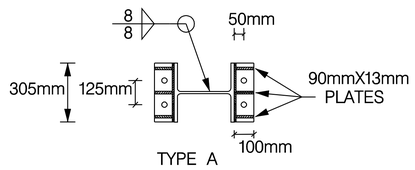


TYPE A

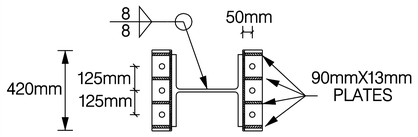


TYPE B
SECTION A

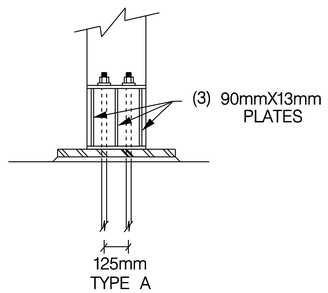


TYPE B SIMILAR WITH THREE BOLTS

NOTE: ALL DIMENSIONS SHOWN ARE IN MILLIMETERS.

US Army Corps of Engineers
New York District

Symbol | Description | Date | Appr.

U.S. ARMY ENGINEER DISTRICT
CORPS OF ENGINEERS
NEW YORK, NEW YORK

Designed by: | Date: | Size: | Rev.
Dwn by: | Ckd by: | Drawing code: | Drawing file no.:
Reviewed by: | Pnd date: 05-JAN-2005 16:33 | Pnd file: sdwnd4w | Plot by: | Scale: SCRIPTDEFAULT
Submitted by:
File name: S:\Benson\military\Dorchester\MPPs\Structural\MPPs_S-100-Sign

PN 52224
MILITARY POLICE STATION
FORT HAMILTON, NY

# COLUMN SCHEDULE

Sheet reference number:
S–105

Submitted by: e3endfwb
Plot Date: 05-JAN-2005 16:33
S:\Other\Dorchester\Fort Hamilton\MPS\Structural\MPPs S-105A.dgn

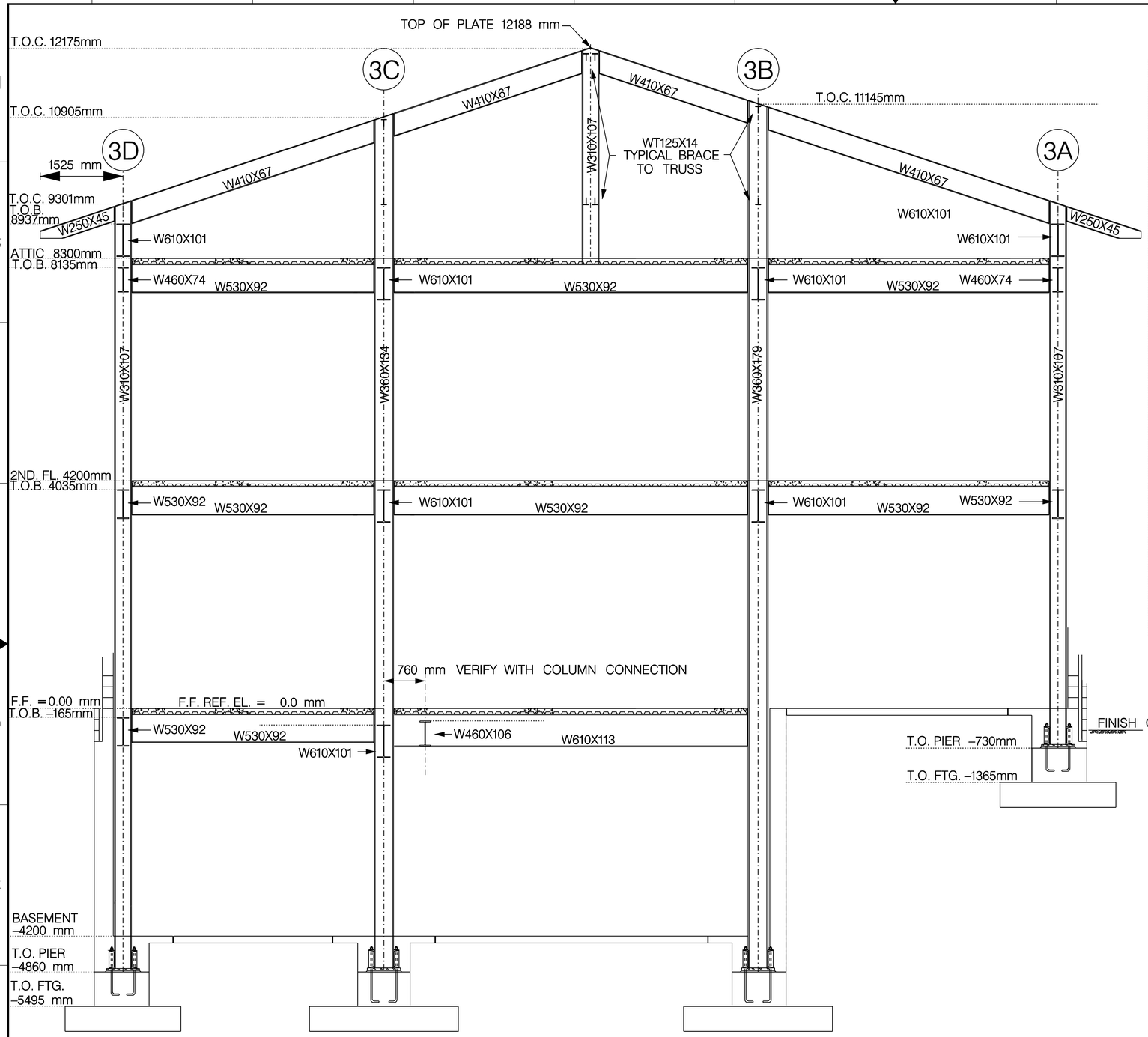


A
S104 S106
SECTION AT MOMENT FRAME

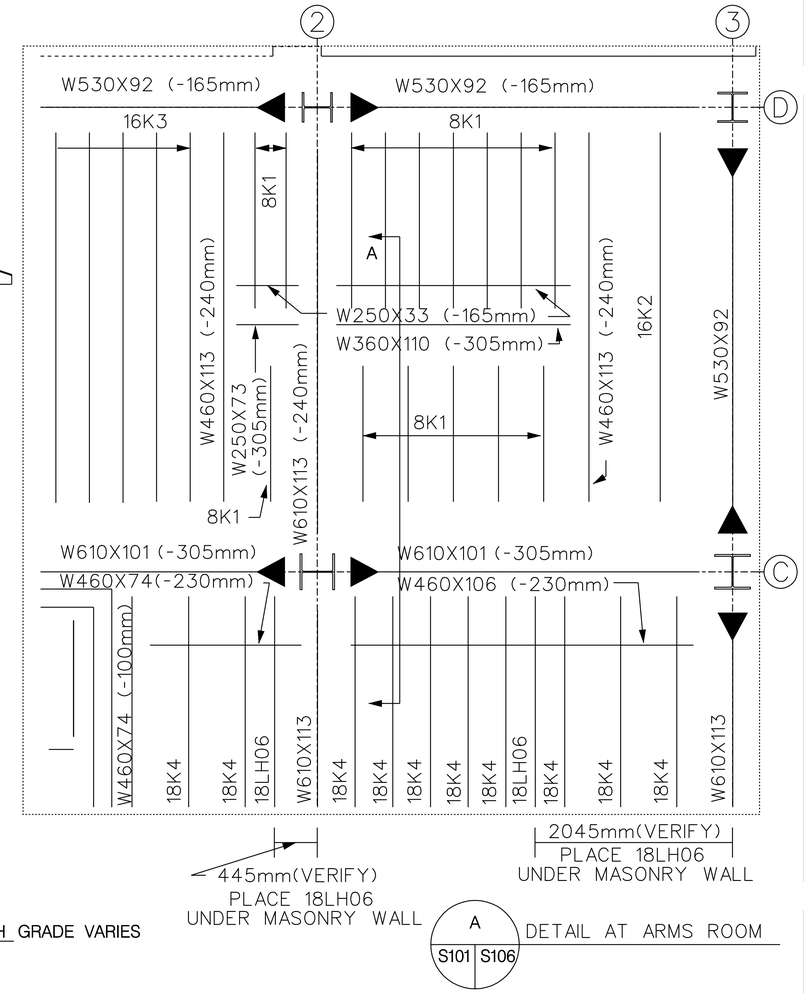


A
S101 S106
DETAIL AT ARMS ROOM

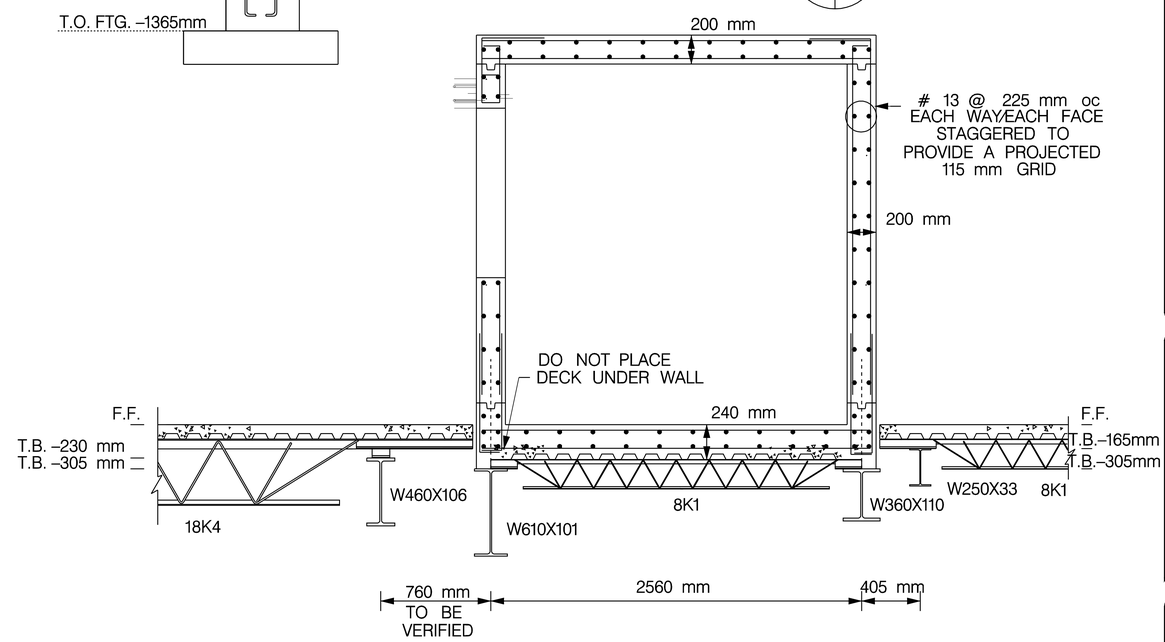


SECTION "A" THROUGH ARMS ROOM

NOTE: ALL DIMENSIONS SHOWN ARE IN MILLIMETERS.

US Army Corps of Engineers
New York District

U.S. ARMY ENGINEER DISTRICT
CORPS OF ENGINEERS
NEW YORK, NEW YORK

Designed by: JLW
Dwn by: JLW
Ckd by: JLW
Reviewed by:
Submitted by:
Date:
Drawing file no.:
Drawing code:
Plot date: 05-JUN-2005 16:33
Plot by: admin4w
Size: 60.000000x36.000000
Size
Rev.
Date
Appr.
Symbol
Description

PN 52224
MILITARY POLICE STATION
FORT HAMILTON NY

MISC. STEEL
SECTION DETAILS

Sheet reference number:
S–106

Submitted by: e3engfwb
Plot Date: 05-JUN-2005 16:33

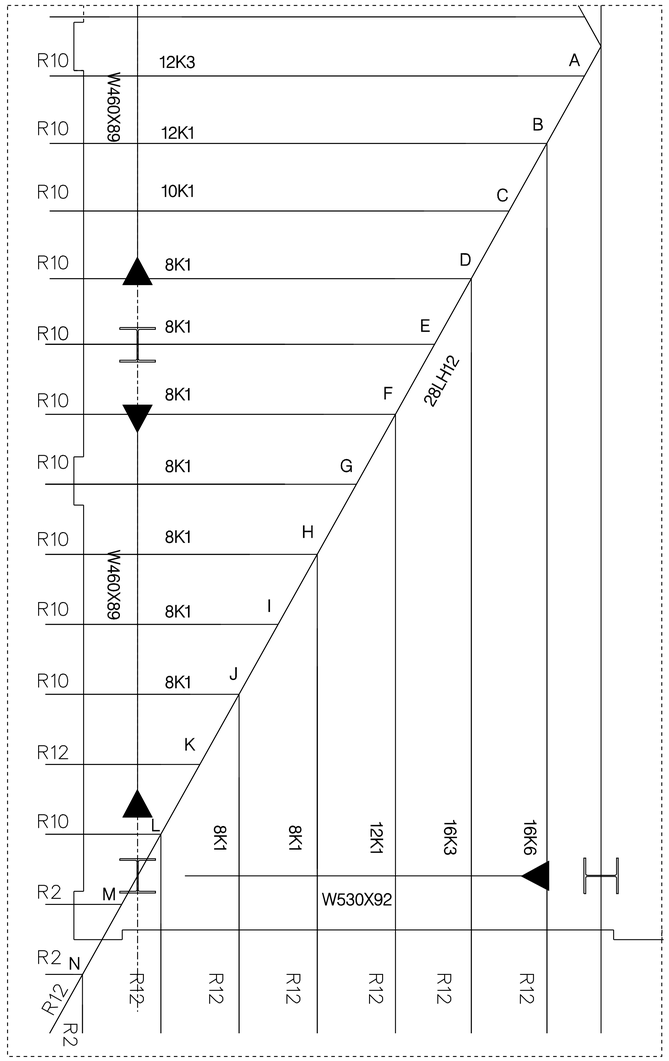


DETAIL 1 — TYPICAL JOIST LOADING AT HIP GIRDER

S104 | S107

NTS

| LOCATION | DEAD LOAD | LIVE LOAD | SNOW LOAD |
|---|---|---|---|
| A | 1.7 KN | 1.9 KN | 6.9 KN |
| B | 4.4 KN | 4.9 KN | 17.8 KN |
| C | 1.4 KN | 1.6 KN | 5.8 KN |
| D | 3.6 KN | 4.0 KN | 14.5 KN |
| E | 1.2 KN | 1.3 KN | 4.7 KN |
| F | 2.8 KN | 3.1 KN | 11.2 KN |
| G | .9 KN | 1.0 KN | 3.5 KN |
| H | 1.9 KN | 2.2 KN | 7.8 KN |
| I | .6 KN | .7 KN | 2.3 KN |
| J | 1.1 KN | 1.3 KN | 4.5 KN |
| K | .3 KN | .3 KN | 1.2 KN |
| L | .3 KN | .3 KN | 1.2 KN |
| M | .7 KN | .6 KN | 2.3 KN |
| N | .9 KN | .9 KN | 3.1 KN |
| | | | |

JOIST MANUFACTURER TO VERIFY ADEQUACY OF 28LH12 SUPPORTING LOADS TABULATED ABOVE.

JOIST MANUFACTURER TO VERIFY ADEQUACY OF JOIST EXTENDED ENDS:
1710 mm = R12
1160 mm = R10
915 mm OR LESS = R2

## DORMER NOTES

DORMER "A":

1. COORDINATE PLACEMENT AND DIMENSIONING OF DORMER WITH ARCHITECTURAL AND MECHANICAL REQUIREMENTS.
2. TRUSS FORCES AND MOMENTS PROVIDED ON DWG. S108 INCLUDE DORMER LOADING AT LOCATIONS SHOWN ON S107 DETAILS.

DORMER "B":

1. SEE ARCH. DWGS. FOR DESIGNER.
2. DUE TO ARCHITECTURAL CONSTRAINTS ARCHED MEMBERS MAY REQUIRE SPECIAL DESIGN TO EXTEND MEMBER BEYOND THE TRUSS LOAD LINE.
3. COORDINATE PLACEMENT AND DIMENSIONING OF DORMER WITH ARCHITECTURAL AND MECHANICAL REQUIREMENTS.
4. TRUSS FORCES AND MOMENTS PROVIDED ON DWG. S108 INCLUDE DORMER LOADING AT LOCATIONS SHOWN ON S107 DETAILS.
5. TRUSSES WERE DESIGNED FOR THE FOLLOWING DORMER POINT LOADS ON THE TRUSS TOP CHORD:

| LOCATION | POINT LOAD (KN) DEAD LOAD | LIVE LOAD | SNOW LOAD |
|---|---|---|---|
| A | 5.3 | 1.3 | 2.2 |
| B | 7.1 | 3.6 | 6.7 |
| C | 8.9 | 4.9 | 8.5 |
| D | 7.1 | 3.6 | 7.6 |
| E | 9.8 | 4.9 | 12.9 |
| F | 5.3 | 1.8 | 10.7 |

ESTIMATED DORMER LOADS:
DEAD LOAD 1.2 $KN/M^2$
LIVE LOAD 1.0 $KN/M^2$
SNOW LOAD 3.4 $KN/M^2$

VERIFY DORMER LOADS WITH FINAL LOADING, ARCHED DORMER SIZING AND THE FOLLOWING WIND LOADS: ROOF UPLIFT (1.7 $KN/M^2$)
DOWNWARD (.7 $KN/M^2$)

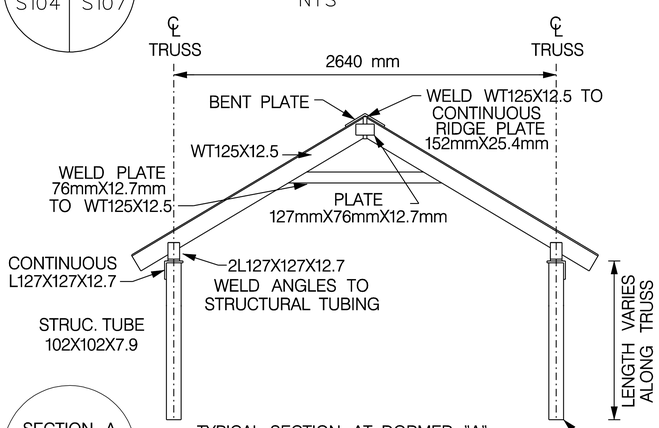


SECTION A — TYPICAL SECTION AT DORMER "A"

S107 | S107

NTS

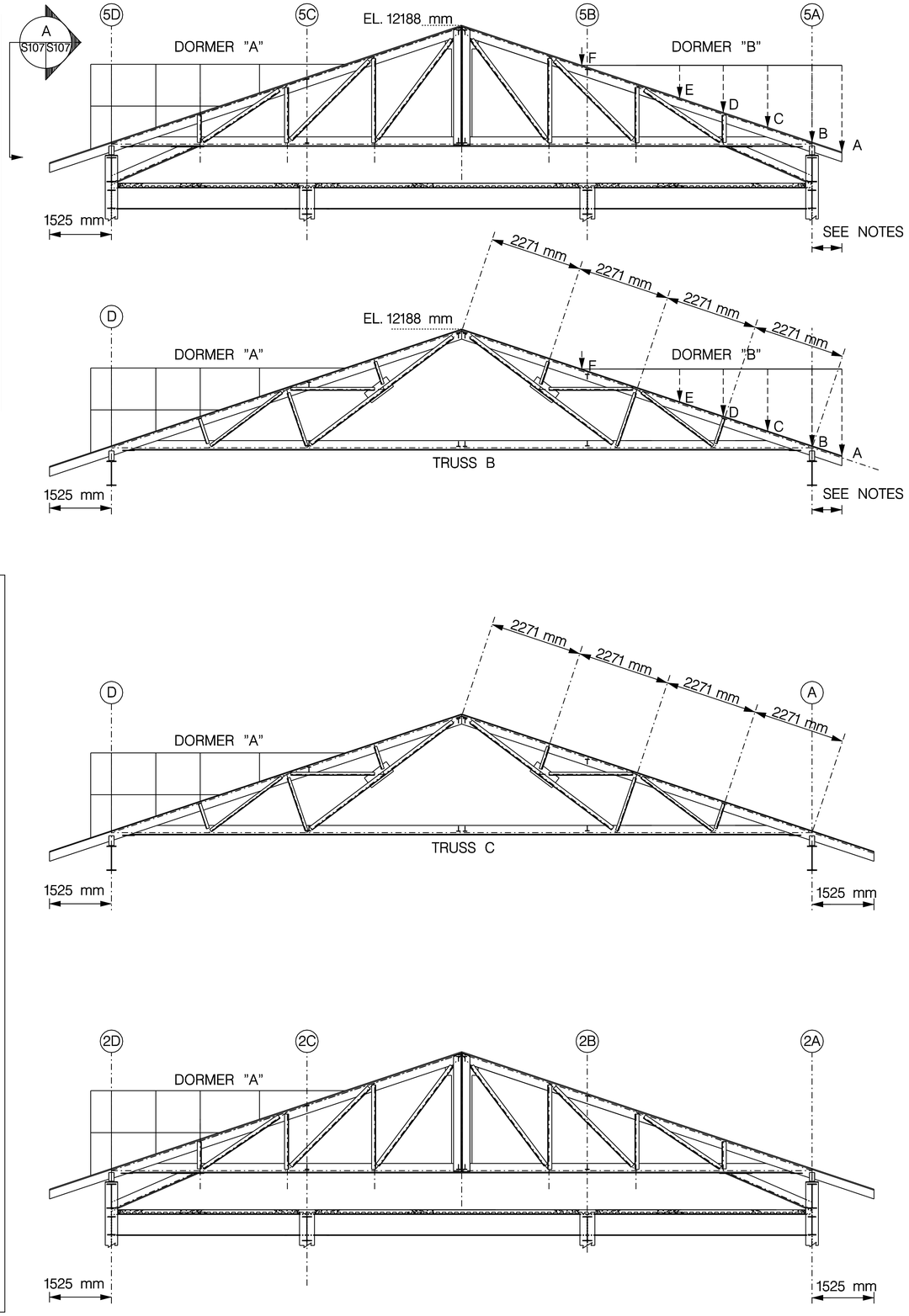


NOTE: ALL DIMENSIONS SHOWN ARE IN MILLIMETERS.

US Army Corps of Engineers
New York District

| Symbol | Description | Date | Appr. |
|---|---|---|---|

Designed by: JLW
Dwn by: JLW
Ckd by:
Reviewed by:
Submitted by:
Date:
Size:
Rev.
Drawing file no.:
Drawing code:
Plot date: 05-JAN-2005 16:33
Plot by: ebenofre
Scale: SC1000000000

U.S. ARMY ENGINEER DISTRICT
CORPS OF ENGINEERS
NEW YORK, NEW YORK

File name: S:\Memorandums\Contractor\APWs\Structural\APWs_S-010.dgn

PN 52224
MILITARY POLICE STATION
FORT HAMILTON, NY

# ROOF SECTION AND DETAILS–A

Sheet reference number:
S–107

Submitted by: ebenofre
Path/Filename: /usr/home/ebenofre/projects/hamilton/MPS/structural/S-010.dgn
Plot Date: 05-JAN-2005 16:33

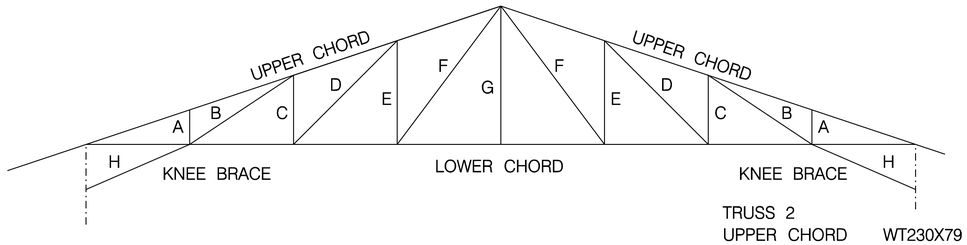


TRUSS 2
UPPER CHORD WT230X79
LOWER CHORD WT230X53
WEB MEMBERS 2L 102X102X12.7
KNEE BRACE WT205X66

| | KN | KN – M |
|---|---|---|
| UPPER CHORD | 722 (C) | 43 |
| LOWER CHORD | 677 (T) | 19 |
| A | 44 (C) | |
| B | 330(C) 21(T) | |
| C | 56(C) 67(T) | |
| D | 95(T) 99(C) | |
| E | 86 (C) | |
| F | 110 (T) | |
| G | 10(T) | |
| H | 375 (C) | 11 |

TRUSS 5
UPPER CHORD WT230X79
LOWER CHORD WT230X53
WEB MEMBERS 2L 102X102X12.7
KNEE BRACE WT205X66

| | KN | KN – M |
|---|---|---|
| UPPER CHORD | 758 (C) | 43 |
| LOWER CHORD | 717 (T) | 20 |
| A | 46 (C) | |
| B | 345(C) 25(T) | |
| C | 65(C) 71(T) | |
| D | 110(T) 106(C) | |
| E | 93 (C) | |
| F | 118 (T) | |
| G | 10 (T) | |
| H | 392 (C) | 12 |

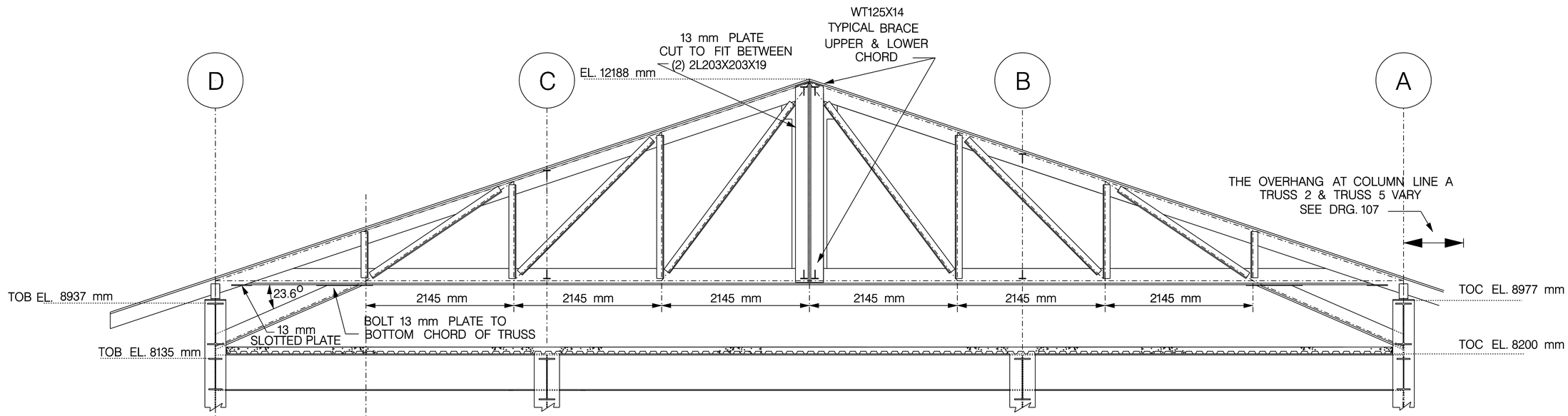


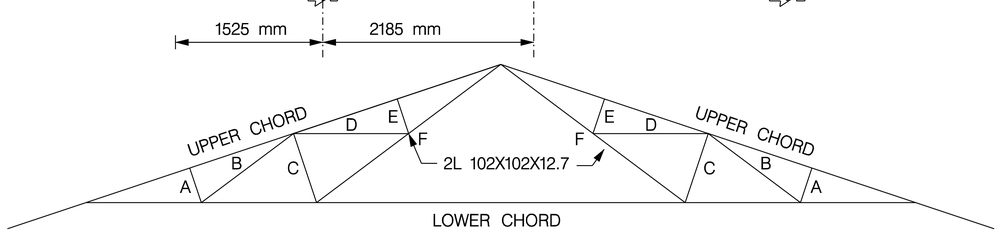


TRUSS B
UPPER CHORD WT230X64
LOWER CHORD WT230X53
WEB MEMBERS 2L 76X76X12.7

| | KN | KN – M |
|---|---|---|
| UPPER CHORD | 500 (C) | 28 |
| LOWER CHORD | 470 (T) | 14 |
| A | 27 (C) | |
| B | 30(T) 9(C) | |
| C | 85 (C) | |
| D | 41 (T) | |
| E | 25 (C) | |
| F | 190 (T) | |

TRUSS A–1
UPPER CHORD WT230X64
LOWER CHORD WT230X53
WEB MEMBERS 2L 76X76X12.7

| | KN | KN – M |
|---|---|---|
| UPPER CHORD | 340 (C) | 23 |
| LOWER CHORD | 315 (T) | 11 |
| A | 20 (C) | |
| B | 14(T) 3(C) | |
| C | 64 (C) | |
| D | 31 (T) | |
| E | 20 (C) | |
| F | 143 (T) | |

TRUSS C
UPPER CHORD WT230X64
LOWER CHORD WT230X53
WEB MEMBERS 2L 76X76X12.7

| | KN | KN – M |
|---|---|---|
| UPPER CHORD | 390 (C) | 30 |
| LOWER CHORD | 357 (T) | 12 |
| A | 18 (C) | |
| B | 10(T) | |
| C | 62(C) | |
| D | 37(T) | |
| E | 23(C) | |
| F | 157(T) | |

TRUSS A–2
UPPER CHORD WT230X64
LOWER CHORD WT230X53
WEB MEMBERS 2L 76X76X12.7

| | KN | KN – M |
|---|---|---|
| UPPER CHORD | 200 (C) | 14 |
| LOWER CHORD | 185 (T) | 7 |
| A | 11 (C) | |
| B | 8 (T) | |
| C | 37 (C) | |
| D | 18 (T) | |
| E | 11 (C) | |
| F | 85 (T) | |

NOTES:

TRUSS FORCES AND MOMENTS INCLUDE DORMER LOADS.
FOR DORMERS SEE DWG. S107.

NOTE: ALL DIMENSIONS SHOWN ARE IN MILLIMETERS.

US Army Corps of Engineers
New York District

Rev. | Date | Appr. | Description | Symbol

Designed by: JLW
Dwn by: JLW
Ckd by:
Reviewed by:
Submitted by:
Date:
Size:
Drawing file no.:
Drawing code:
Plot date: 05-JAN-2006 16:33
Plot by: adwindho
Date: 00/00/00/00000
File name: S:\Wasson\military\Fort Hamilton\Models\structural\Models_S-108.dgn

U.S. ARMY ENGINEER DISTRICT
CORPS OF ENGINEERS
NEW YORK, NEW YORK

PN 92224
MILITARY POLICE STATION
FORT HAMILTON, NY

ROOF SECTION AND DETAILS–B

Sheet reference number:
S–108

Submitted by: wbendtwo
Plot Date: 05-JAN-2006 16:33
S:\Wasson\military\Fort Hamilton\Models\structural\Models_S-108.dgn

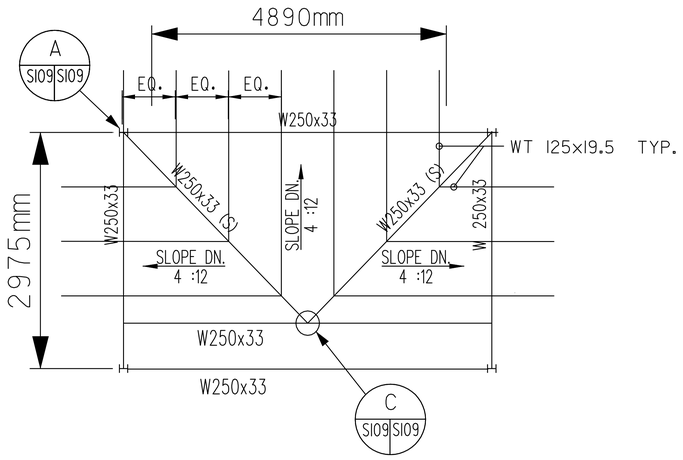


DET. 1
S103 S109

CANOPY FRAMING PLAN

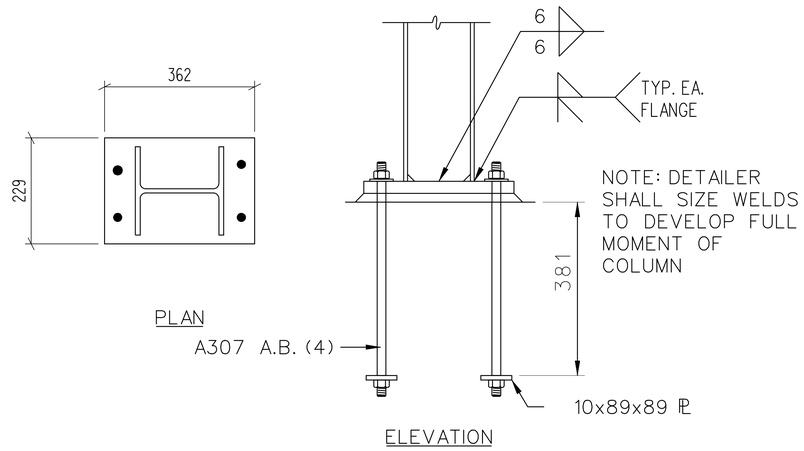


COLUMN BASE PLATE TYPE
SCALE: NTS

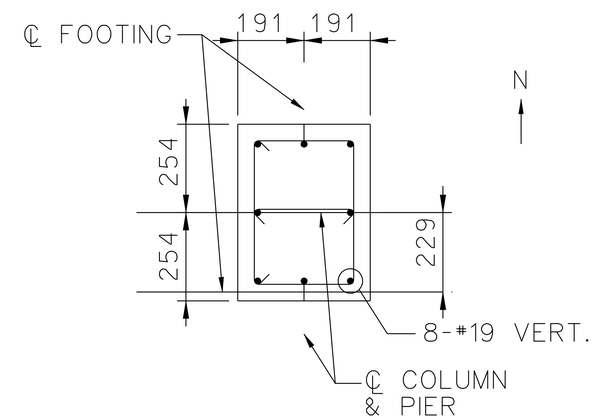


PIER TYPE
SCALE: NTS

FOOTING TYPE

760 mm X 760 mm X 150 mm
#16 @ 305 mm o.c.e.w.

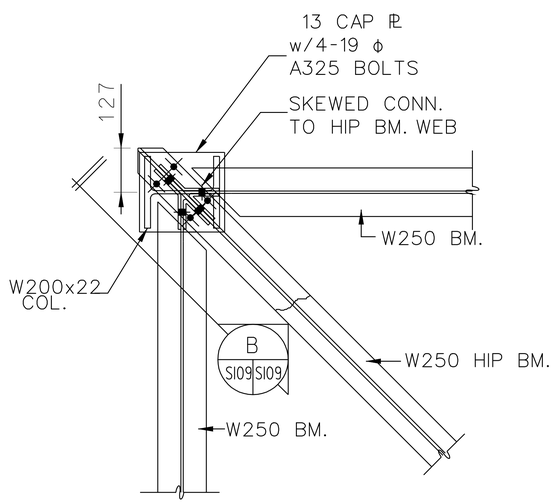


DETAIL
SCALE: NTS
A
S109 S109

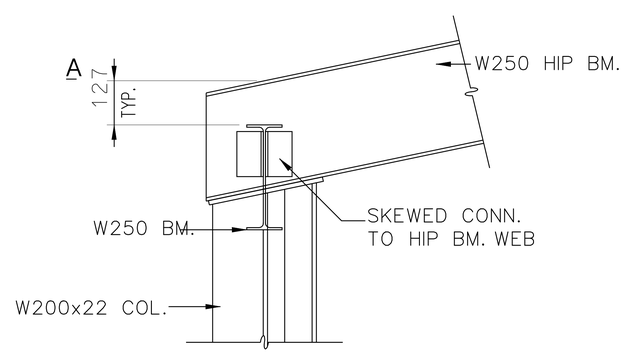


SECTION
SCALE: NTS
B
S109 S109

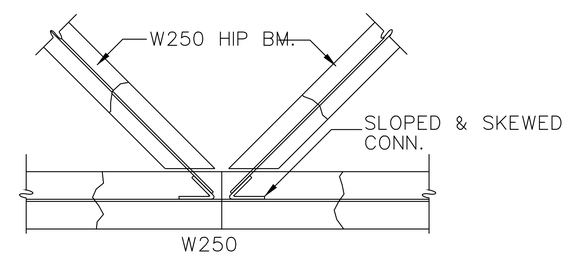


DETAIL
SCALE: NTS
C
S109 S109

NOTE: ALL DIMENSIONS SHOWN ARE IN MILLIMETERS.

US Army Corps of Engineers
New York District

| Symbol | Description | Date | Appr. |
|---|---|---|---|

U.S. ARMY ENGINEER DISTRICT
CORPS OF ENGINEERS
NEW YORK, NEW YORK

Designed by: SOD
Dwn by: SOD
Ckd by:
Reviewed by:
Submitted by:
Date:
Size:
Rev.
Drawing file no.:
Drawing code:
Plot date: 05-JAN-2005 16:33
Plot by: abandwa
Scale: 50.000000000000

File name: S:\Navcon\military\Hamilton\MPDs\Structural\MPDs S-109.dgn

MILITARY POLICE STATION
FORT HAMILTON, NY
PN 52224

CANOPY DETAIL S-1

Sheet reference number:
S–109

Submitted by: e3endfwb
Plot Date: 05-JAN-2005 16:33
Setfiles: nsmilitary.pltcfg | Hamilton.pltcfg | structural.pltcfg | S-109.dgn

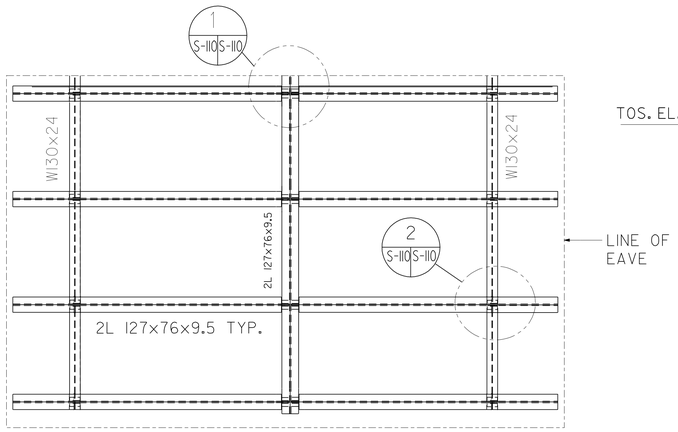


DET. 2 S-103 S-110

CANOPY FRAMING PLAN
SCALE: NTS

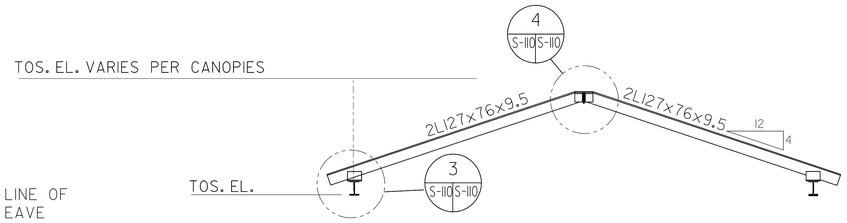


NOTES:
1. FOR ROOFING, SEE ARCH. DWG.
2. FOR COPING DETAIL, SEE ARCH. DWG.

CANOPY ELEVATION
SCALE: NTS

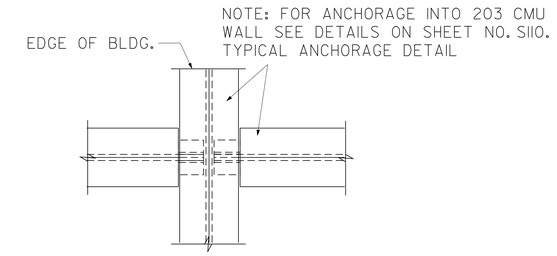


DETAIL 1 S-110 S-110
SCALE: NTS

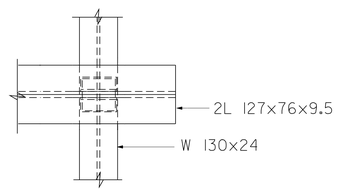


DETAIL 2 S-110 S-110
SCALE: NTS

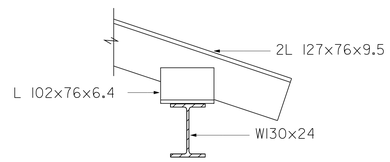


DETAIL 3 S-110 S-110
SCALE: NTS

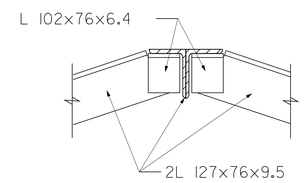


DETAIL 4 S-110 S-110
SCALE: NTS

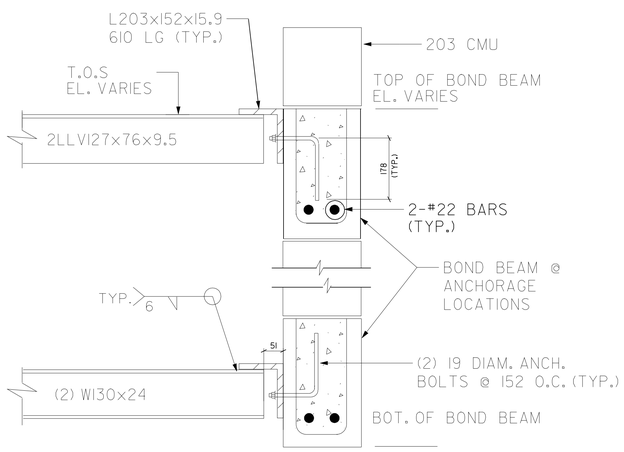


NOTES:
1. COORDINATE ALL ELEVATIONS WITH ARCH. DWGS.
2. FACING BRICK NOT SHOWN FOR CLARITY SEE ARCH. DWGS.
3. FULLY GROUT MASONRY EXTERIOR WALL AT CANOPY ANCHORAGE LOCATIONS, USE #22 BARS VERT. @ 203. EXTEND MIN. 2 CELLS ON EITHER SIDE OF ANCHORAGE BOLTS WHERE REQ'D. LINTELS MAY SERVE AS CANOPY ACHORAGE AS REQUIRED.

TYPICAL CANOPY ANCHORAGE DETAIL
SCALE: NTS

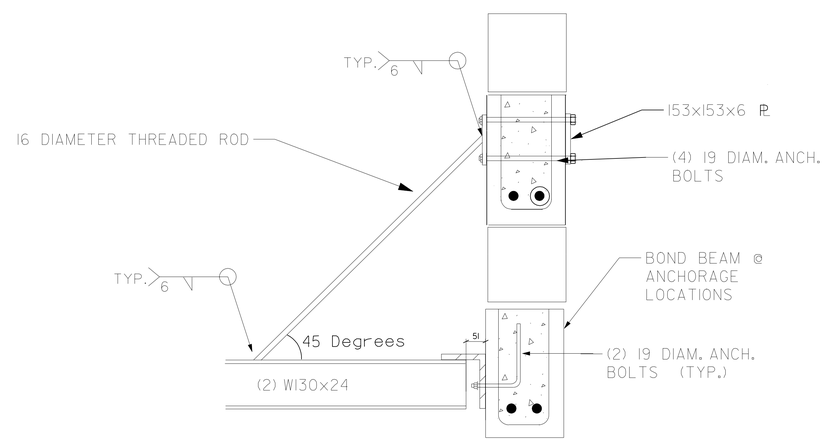


NOTES:
1. COORDINATE ALL ELEVATIONS WITH ARCH. DWGS.
2. FACING BRICK NOT SHOWN FOR CLARITY SEE ARCH. DWGS.
3. FULLY GROUT MASONRY EXTERIOR WALL AT CANOPY ANCHORAGE LOCATIONS, USE #22 BARS VERT. @ 203. EXTEND MIN. 2 CELLS ON EITHER SIDE OF ANCHORAGE BOLTS WHERE REQ'D. LINTELS MAY SERVE AS CANOPY ACHORAGE AS REQUIRED.

TYPICAL CANOPY ROD DETAIL
SCALE: NTS

NOTE: ALL DIMENSIONS SHOWN ARE IN MILLIMETERS.

US Army Corps of Engineers
New York District

| Symbol | Description | Date | App. |
|---|---|---|---|

U.S. ARMY ENGINEER DISTRICT
CORPS OF ENGINEERS
NEW YORK, NEW YORK

Designed by: SOD | Date: | Size: | Rev.
Dwn by: SOD | Ckd by: | Drawing file no:
Reviewed by: | Drawing code:
Submitted by: | Plot date: 05-JAN-2005 16:33 | Plot by: eldenwa | Scale: as depicted / 1:100000
File name: S:\Benson\military\Fort Hamilton\MPRA\Structural\MPRA S-110.dgn

PN. 50224
MILITARY PACKET STATION
FORT HAMILTON, NY

CANOPY DETAIL S-2

Sheet reference number:
S-110

Submitted by: eldenwa
Sarfilor:admin:tbs:pdf1 hamilton:MPS:tpdf1:ccdor.dwg:MPRA S-110.dgn
Plot Date: 05-JAN-2005 16:33

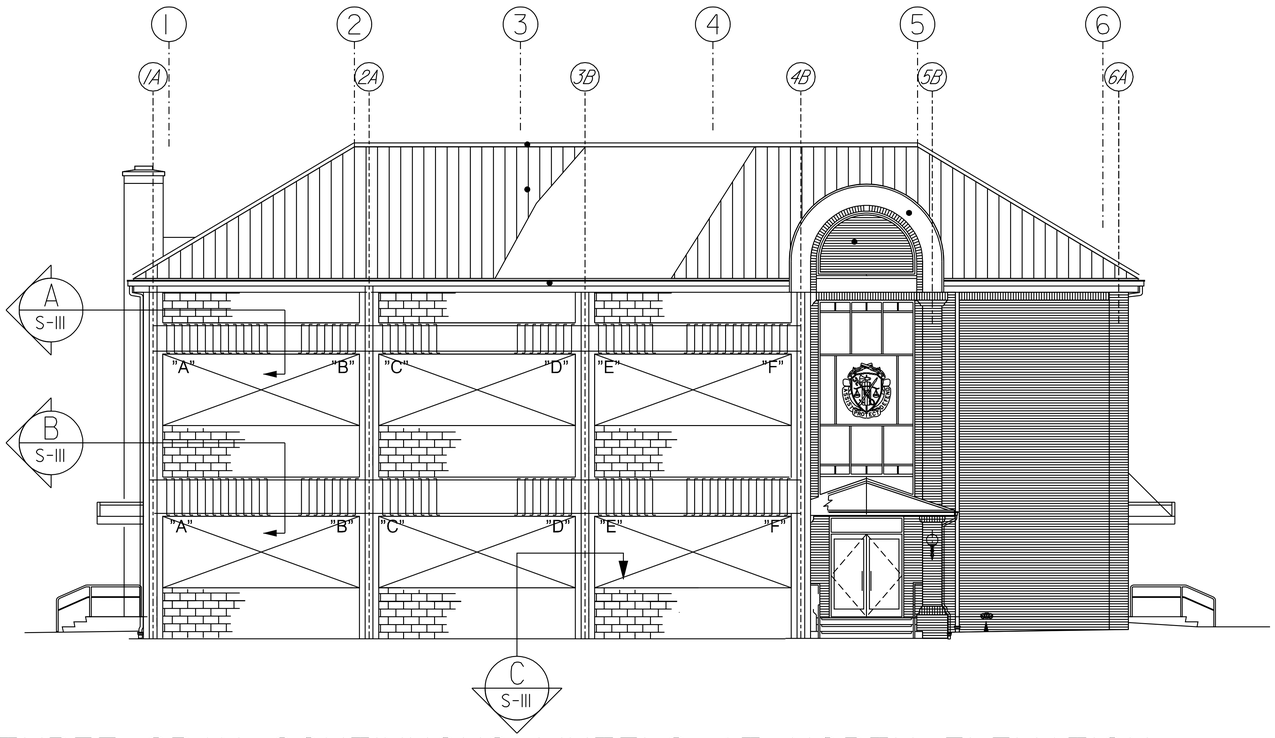


THREE SPAN CONTINUOUS LINTELS AT NORTH ELEVATION

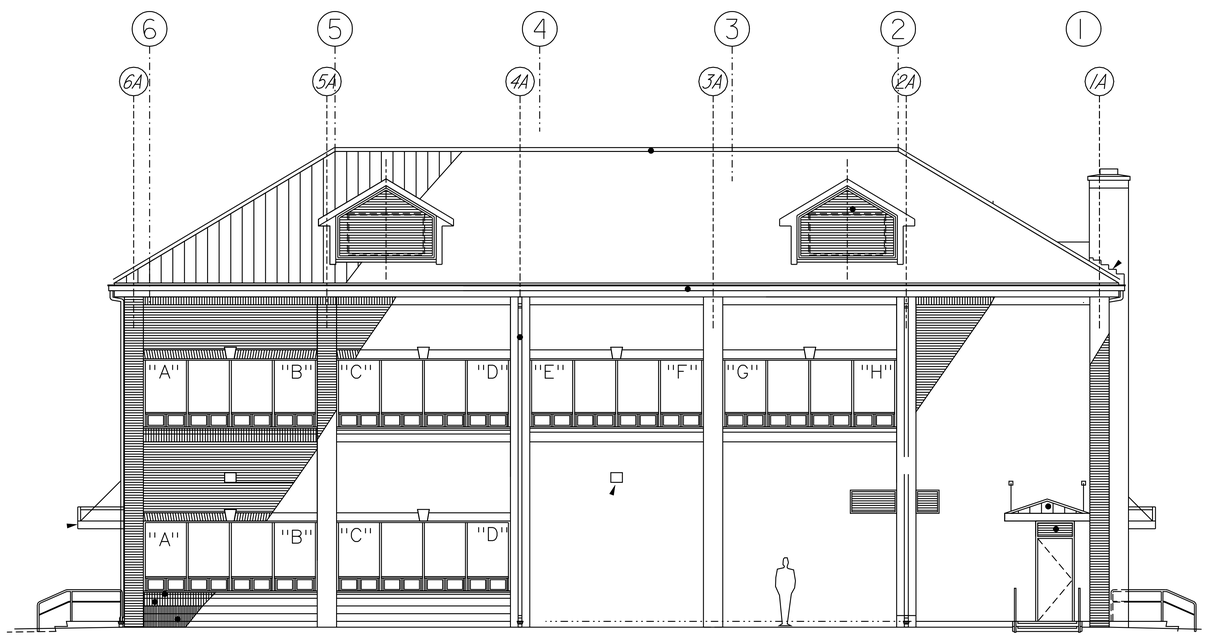


FOUR AND TWO SPAN CONTINUOUS LINTELS AT SOUTH ELEVATION

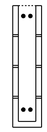

| LINTEL DIMENSION | REINFORCING | SHEAR REINFORCING |
|---|---|---|
| 203 mm X 812 mm | 2 #16 UPPER & LOWER | 1 #10 @ 200 mm STARTING 100 MM FROM FACE OF SUPPORT<br>"A" FOR A LENGTH OF 2590 mm<br>"B" FOR A LENGTH OF 1525 mm<br>"C" FOR A LENGTH OF 2130 mm<br>"D" FOR A LENGTH OF 2130 mm<br>"E" FOR A LENGTH OF 1525 mm<br>"F" FOR A LENGTH OF 2590 mm |

A / S-III SECTION AT CONTINUOUS 3 SPAN LINTEL UPPER LEVEL

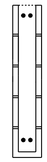

| LINTEL DIMENSION | REINFORCING | SHEAR REINFORCING |
|---|---|---|
| 203 mm X 1016 mm | 2 #19 UPPER & LOWER | 1 #10 @ 200 mm STARTING 100 MM FROM FACE OF SUPPORT<br>"A" FOR A LENGTH OF 2590 mm<br>"B" FOR A LENGTH OF 1525 mm<br>"C" FOR A LENGTH OF 2130 mm<br>"D" FOR A LENGTH OF 2130 mm<br>"E" FOR A LENGTH OF 1525 mm<br>"F" FOR A LENGTH OF 2590 mm |

B / S-III SECTION AT CONTINUOUS 3 SPAN LINTEL LOWER LEVEL

| PILASTER DIMENSION | REINFORCING | TIES |
|---|---|---|
| 500 mm X 450 mm | 4 #22 | #10 EVERY 200 mm |

TYPICAL SOLID MASONRY AND BRICK PILASTERS FOR LINTEL SUPPORT AT LARGE WINDOW LOCATIONS.
TYPICAL SOLID BRICK PILASTERS FOR LINTEL SUPPORT AT LARGE CORNER WINDOW LOCATIONS.
500 mm X 500 mm

C / S-III SECTION AT PILASTER

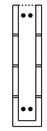

| LINTEL DIMENSION | REINFORCING | SHEAR REINFORCING |
|---|---|---|
| 203 mm X 812 mm | 2 #16 UPPER & LOWER | 1 #10 @ 200 mm STARTING 100 MM FROM FACE OF SUPPORT<br>"A" FOR A LENGTH OF 2280 mm<br>"B" FOR A LENGTH OF 1525 mm<br>"C" FOR A LENGTH OF 1525 mm<br>"D" FOR A LENGTH OF 1525 mm<br>"E" FOR A LENGTH OF 1525 mm<br>"F" FOR A LENGTH OF 1525 mm<br>"G" FOR A LENGTH OF 1525 mm<br>"H" FOR A LENGTH OF 2280 mm |

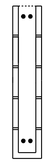

UPPER LEVEL

| LINTEL DIMENSION | REINFORCING | SHEAR REINFORCING |
|---|---|---|
| 203 mm X 1016 mm | 2 #19 UPPER & LOWER | 1 #10 @ 200 mm STARTING 100 MM FROM FACE OF SUPPORT<br>"A" FOR A LENGTH OF 2280 mm<br>"B" FOR A LENGTH OF 1525 mm<br>"C" FOR A LENGTH OF 1525 mm<br>"D" FOR A LENGTH OF 2280 mm |

LOWER LEVEL

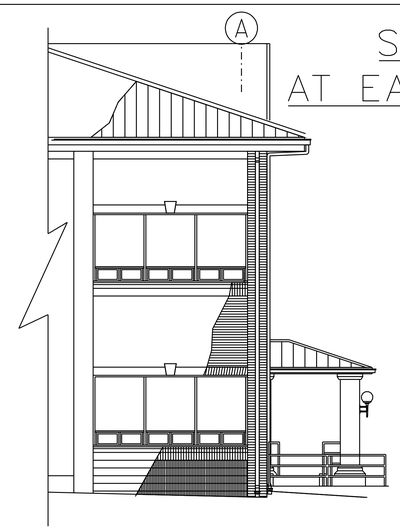


SINGLE SPAN LINTELS
AT EAST & WEST ELEVATIONS

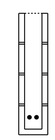

| LINTEL DIMENSION | REINFORCING |
|---|---|
| 203 mm X 812 mm | 2 #16 |

UPPER LEVEL

| LINTEL DIMENSION | REINFORCING |
|---|---|
| 203 mm X 812 mm | 2 #16 |

LOWER LEVEL

NOTE: ALL DIMENSIONS SHOWN ARE IN MILLIMETERS.

US Army Corps of Engineers
New York District

| Symbol | Description | Date | Appr. |
|---|---|---|---|

U.S. ARMY ENGINEER DISTRICT
CORPS OF ENGINEERS
NEW YORK, NEW YORK

Designed by: JLW
Date:
Size:
Rev.:
Dwn by: JLW
Ckd by:
Drawing file no.:
Drawing code:
Reviewed by:
Plot date: 05-JAN-2005 16:33
Plot by: e3endfeb
Submitted by:
File name: S:\Mission\Military\Fort Hamilton\Office\Structural\Office S-111.dgn

PN 52224
MILITARY POLICE STATION
FORT HAMILTON, NY

MASONRY SECTIONS AND DETAILS

Sheet reference number:
S–111

Submitted by: e3endfeb
Plot Date: 05-JAN-2005 16:33

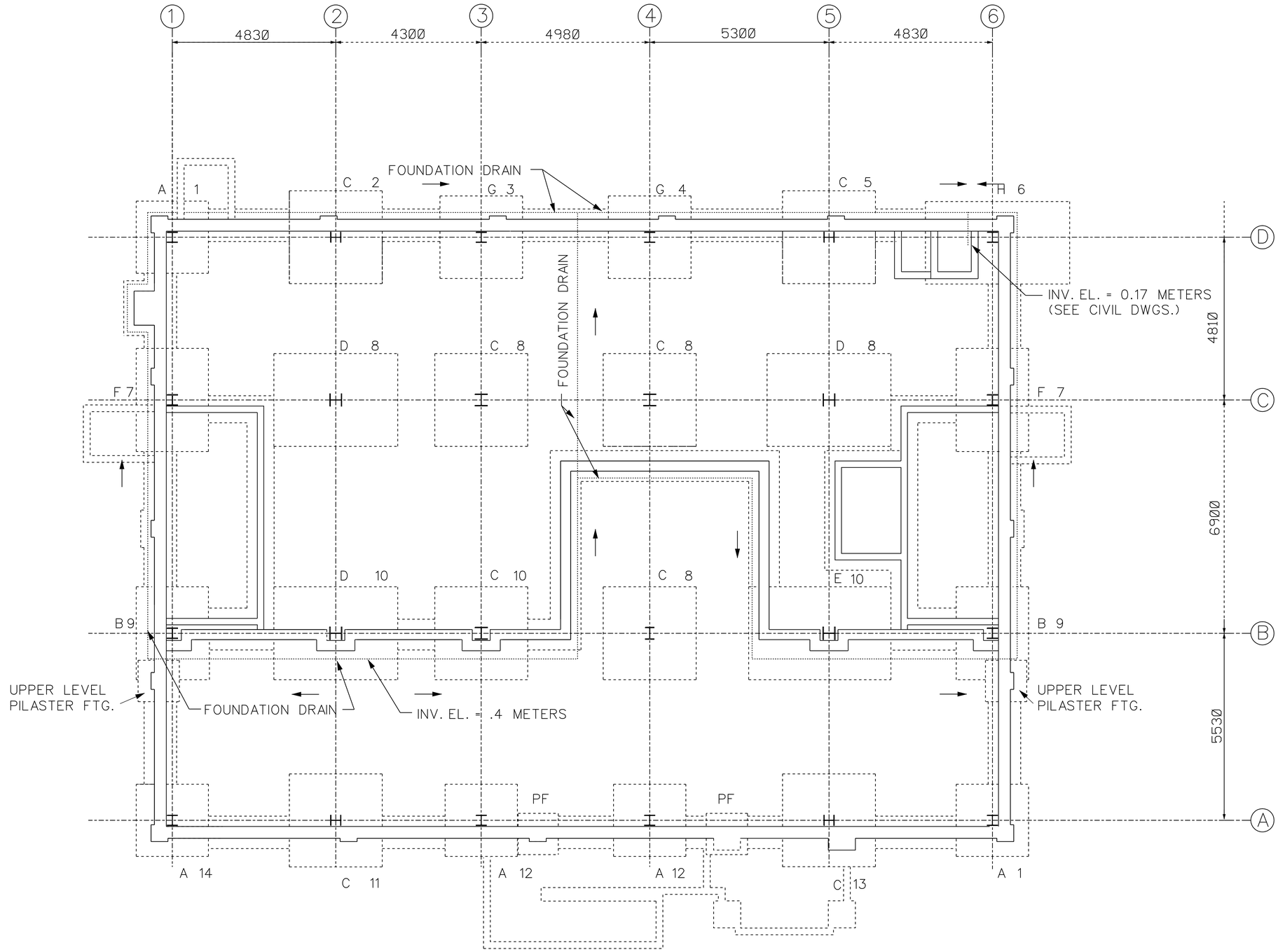


LETTER DENOTES FOOTING TYPE. NUMBER DENOTES PIER TYPE. SEE COLUMN SCHEDULE DWG. S105 FOR FOOTING TABLE WITH REINFORCEMENT. SEE DWG. 704 FOR PIER TYPES.
SEE DWG. S705 FOR EXTERIOR STAIR AND RAMP DETAILS.

NOTE: ALL DIMENSIONS SHOWN ARE IN MILLIMETERS.

US Army Corps of Engineers
New York District

| Symbol | Description | Date | App. |
|---|---|---|---|

U.S. ARMY ENGINEER DISTRICT
CORPS OF ENGINEERS
NEW YORK, NEW YORK

Designed by: GJC/SOD
Dwn by: JLM Ckd by:
Reviewed by:
Submitted by:
Date:
Drawing file no:
Drawing code:
Plot date: 05-JAN-2005 16:33
Plot by: ddenofa
Scale: SO70000000000
Size: Rev.
File name: S:\Benson\military\Fort Hamilton\MPPs\Structural\MPPs_S-701.dgn

PN 52224
MILITARY POLICE STATION
FORT HAMILTON, NY

# FOUNDATION PLAN

Sheet reference number:
S-701

Submitted by: e3endfwb
Sa:\Hor\admin\hor\prfor\ HamiltonMPS\ldf\hor\ldor\ldMPS-S701.dgn
Plot Date: 05-JAN-2005 16:33

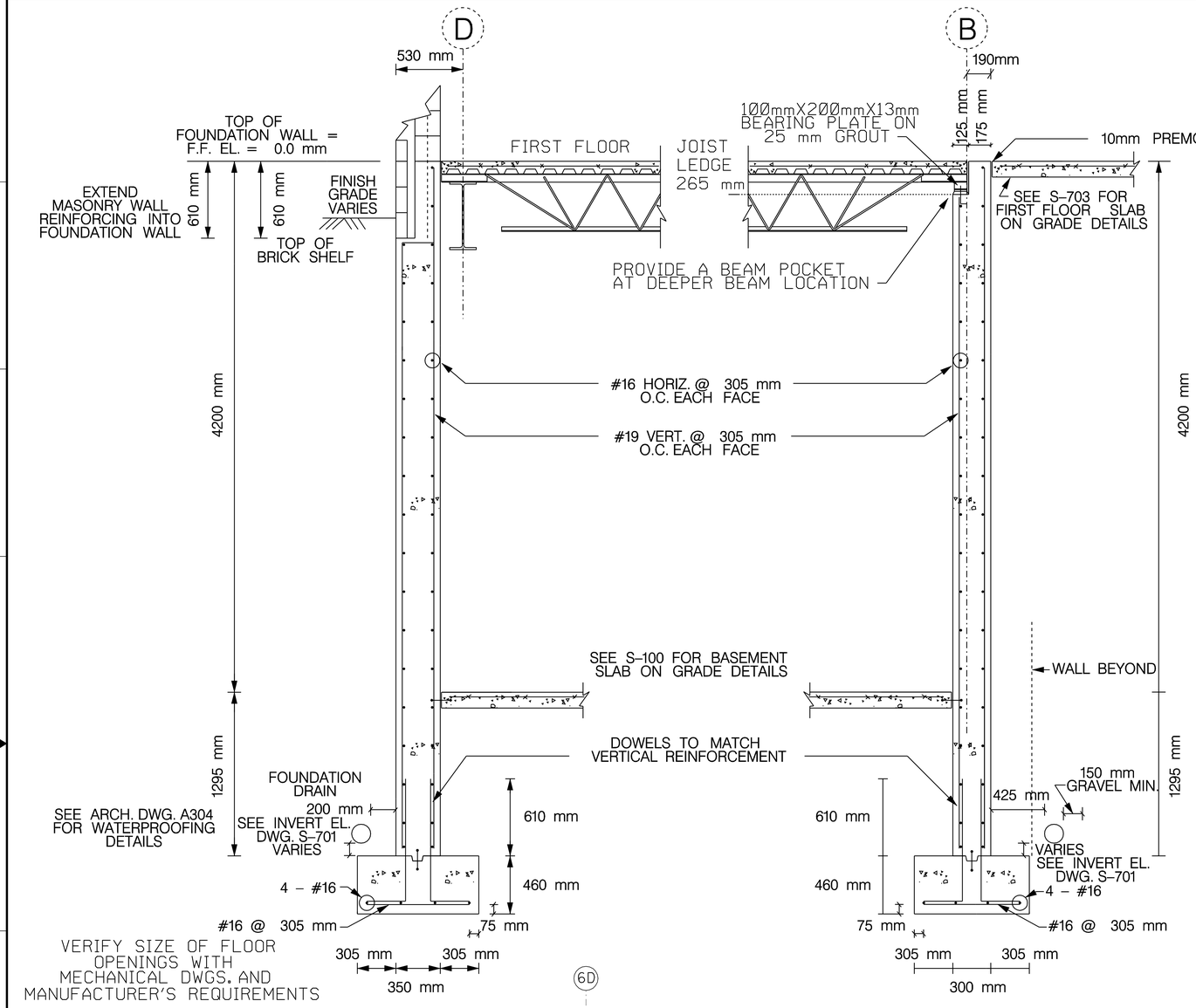


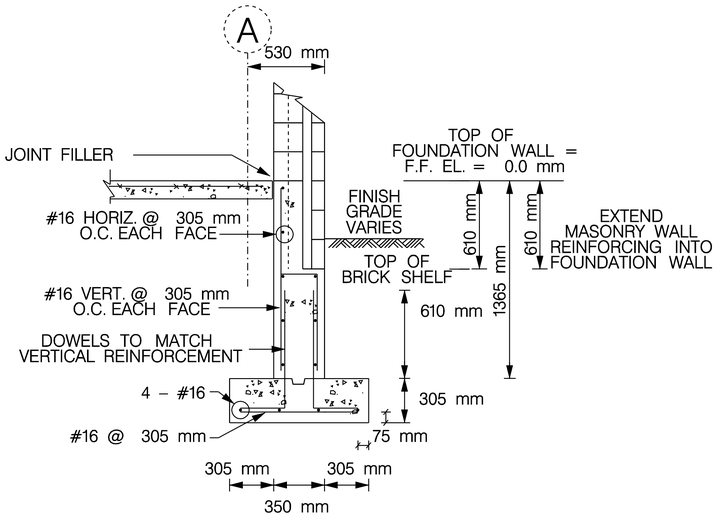


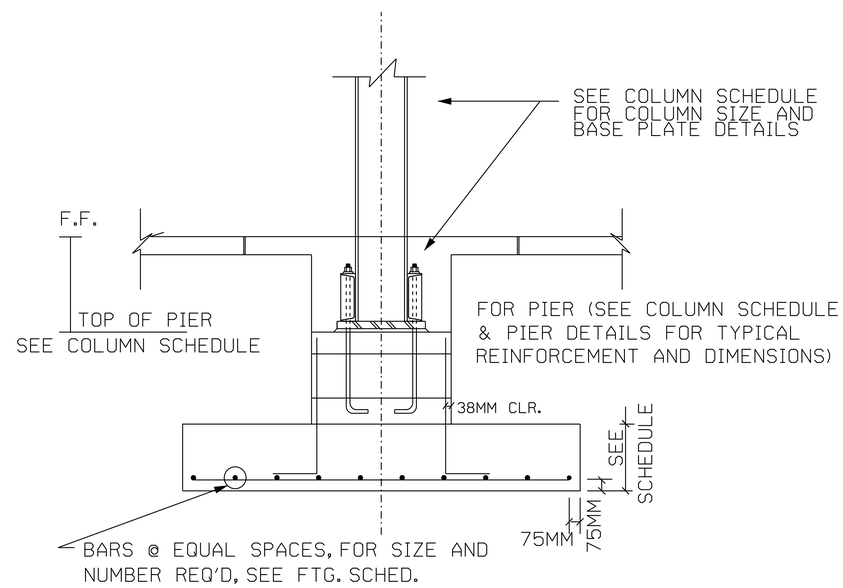


## TYPICAL SPREAD FOOTING (N.T.S.)

NOTES:

1. INTERSECTING FOUNDATION WALLS AND WALL FOOTINGS, WHERE APPLICABLE, ARE NOT SHOWN FOR CLARITY, WHERE THIS CONDITION OCCURS, EXTEND CONTINUOUS WALL FOOTING BARS MIN. 305 MM INTO THE SPREAD FOOTING AND RUN HORIZ. WALL REINFORCEMENT THROUGH THE PIER.
2. FOOTING SIZE CALLED FOR IN THE FOOTING SCHEDULE IS BASED ON THE FOOTING CENTERED WITH THE COLUMN CENTERLINES.
3. SEE CIVIL DRAWINGS FOR FINISH FLOOR ELEVATION.

NOTE: ALL DIMENSIONS SHOWN ARE IN MILLIMETERS.

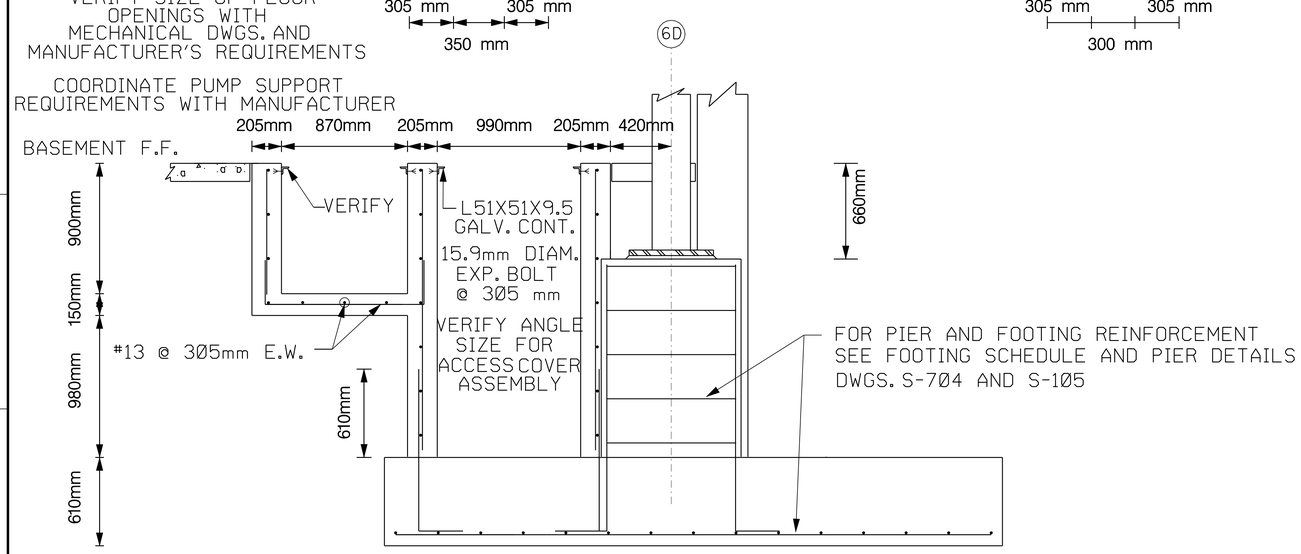


## FOOTING WITH PUMP REQUIREMENTS AT COL. 6D

US Army Corps of Engineers
New York District

| Symbol | Description | Date | Appr. |
|---|---|---|---|

U.S. ARMY ENGINEER DISTRICT
CORPS OF ENGINEERS
NEW YORK, NEW YORK

Designed by: JLW | Date: | Size: | Rev.:
Dwn by: JLW | Ckd by: | Drawing file no.:
Reviewed by: | Drawing code:
Submitted by: | Plot date: 05-JUN-2005 16:33 | Plot for: 40scale | Scale: 50.000000000000
File name: S:\Benson\military\fortbenning\MPBs\Structural\MPBs S-702.dgn

MILITARY POLICE STATION
FORT BENNING, GA

PN 52224

# FOUNDATION SECTIONS & DETAILS

Sheet reference number:
S-702

Submitted by: e3endfab
Plot Date: 05-JUN-2005 16:33
Settler:admin:hunsperf Hamilton:MPBS:opt:fnc:dur:dMPBs S-702.dgn

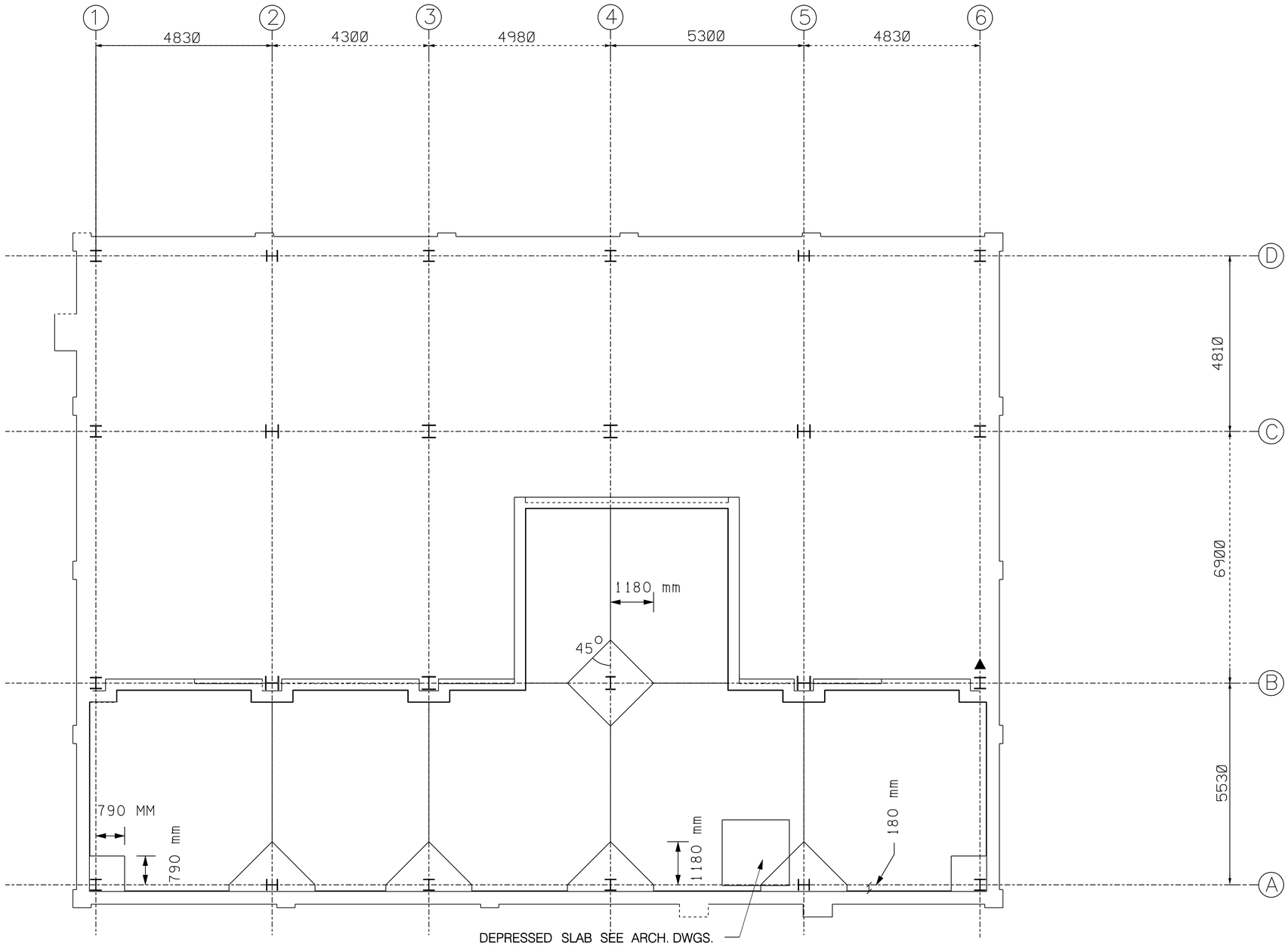


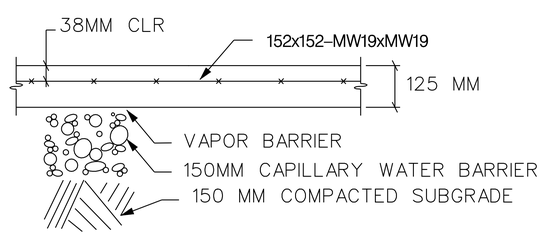


TYPICAL SLAB ON GRADE FIRST FLOOR

SEE DWG. S-100 FOR BASEMENT SLAB AND SLAB DETAILS.

NOTE: ALL DIMENSIONS SHOWN ARE IN MILLIMETERS.

US Army Corps of Engineers
New York District

| Symbol | Description | Date | Appr. |
|---|---|---|---|

U.S. ARMY ENGINEER DISTRICT
CORPS OF ENGINEERS
NEW YORK, NEW YORK

Designed by: JLW
Dwn by: JLW Ckd by:
Reviewed by:
Submitted by:
Date:
Drawing code:
Drawing file no.:
Size: Rev.:
Plot date: 05-JAN-2005 16:34
Plot by: e2medfwb
Style: 1000x1000.tbl
File name: S:\divcon\military\portchambers\drafting\structural\drfts S-703.dgn

PN. 52224
MILITARY POLICE STATION
FORT HAMILTON, NY

SLAB ON GRADE FIRST FLOOR

Sheet reference number:
S-703

Submitted by: e2medfwb
Plot Date: 05-JAN-2005 16:34
pentlandsmallbeg:pw:s:\hamilton\pw@s1\pw@fortpw\pw@s1\structural\drfts S-703.dgn

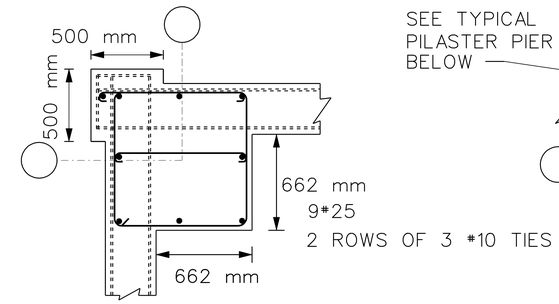


PIER 1

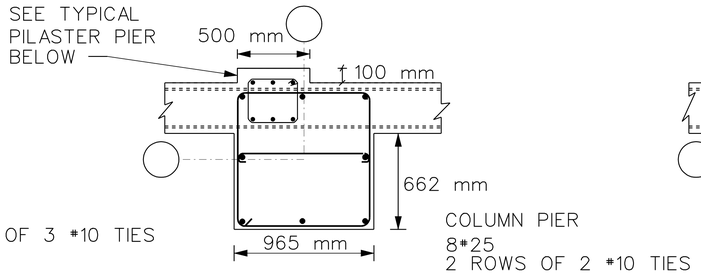


PIER 2

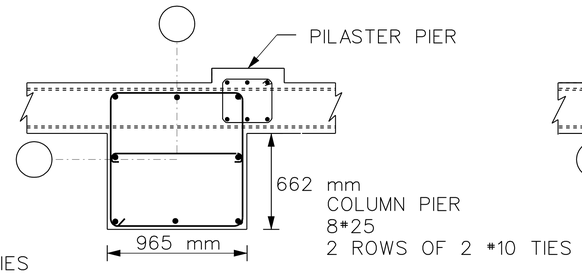


PIER 3

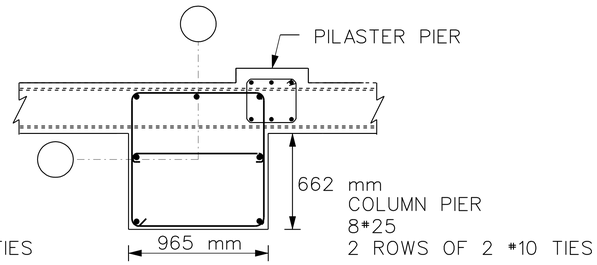


PIER 4

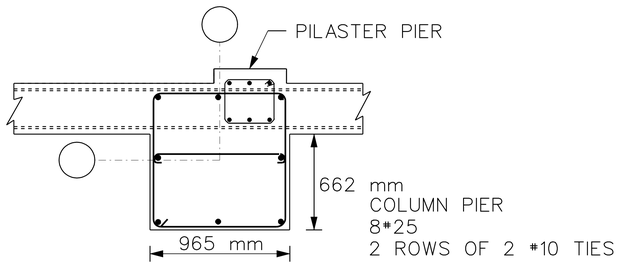


PIER 5

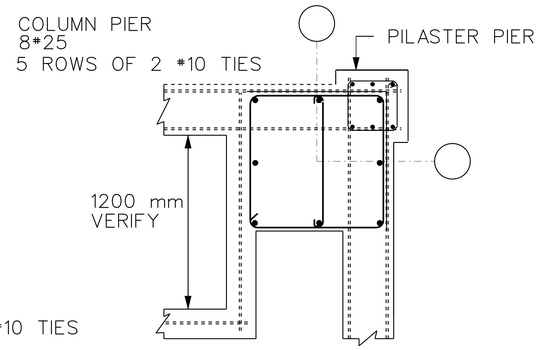


PIER 6

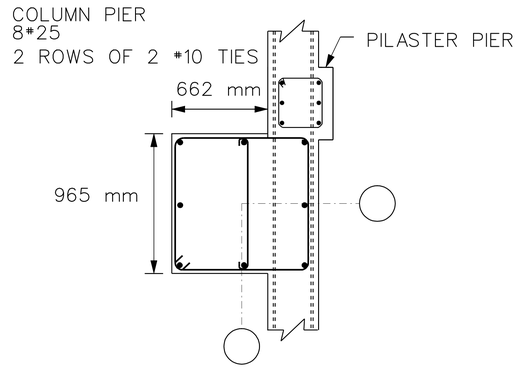


PIER 7

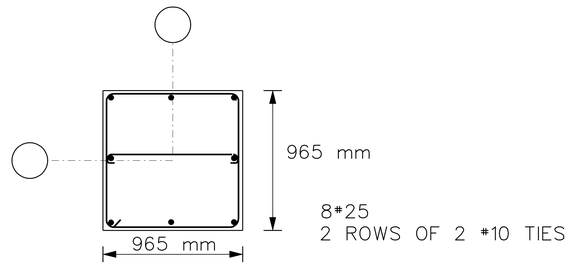


PIER 8

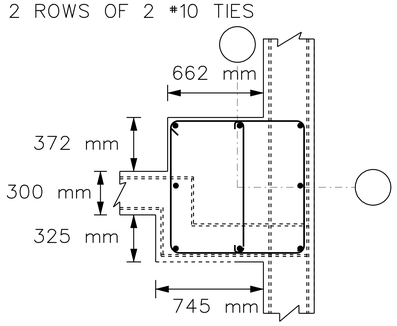


PIER 9

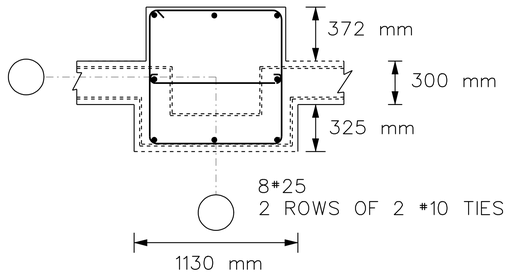


PIER 10

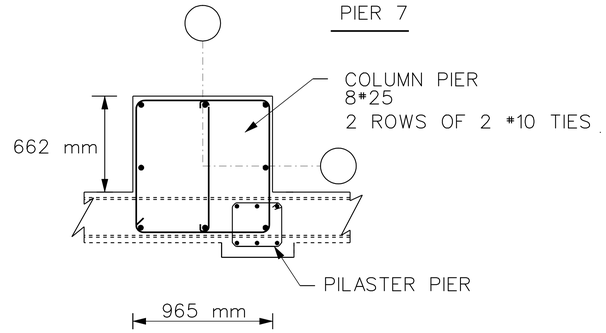


PIER 11

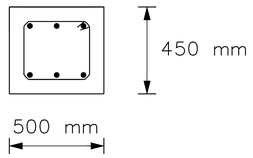


FOR CMU BLOCK & BRICK PILASTER

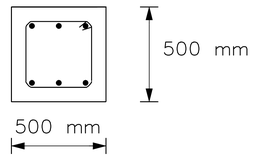


FOR SOLID BRICK PILASTER AT BUILDING CORNERS

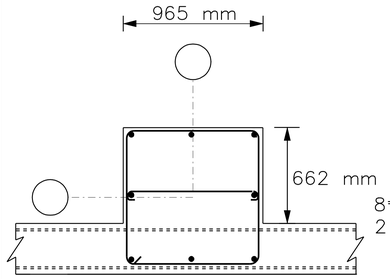


PIER 12

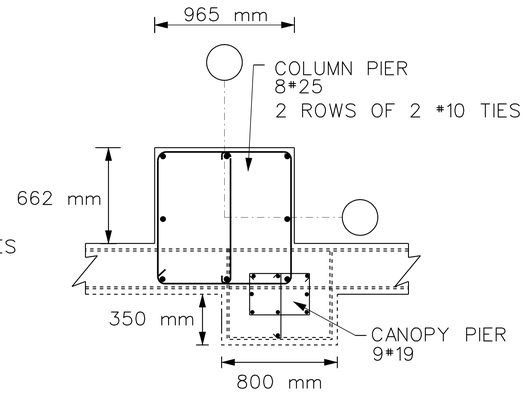


PIER 13

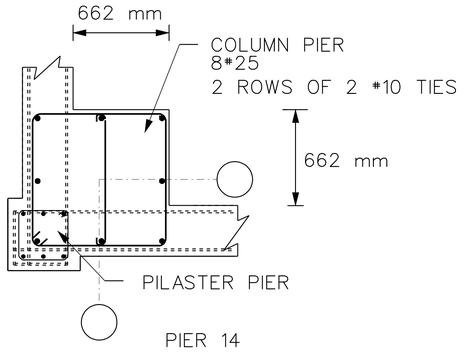


PIER 14

6#32
3 ROWS OF 1 #10 TIES (SHORT PIER)
1 #10 TIE @ 305 MM O.C.(TALL PIER AT BASEMENT AREA)
TYPICAL REINFORCING ALL PILASTER PIERS
PILASTER PIER NOTES:

1. NO BASEMENT AREA:
TOP OF PILASTER PIER UNDER CMU @ FINISH FLOOR
OUTERMOST BRICK - LEVEL WITH BRICK SHELF
2. BASEMENT AREA:
TOP OF PILASTER PIER LEVEL WITH BRICK SHELF
FOR BOTH CMU AND BRICK
3. FOR PILASTER FOOTING (PF) INFO SEE DWG. S105
4. SOLID CMU/BRICK OR SOLID BRICK PILASTERS ARE LOCATED AS SUPPORTS FOR LARGE WINDOWS.
5. PILASTER PIERS AT TIMES SHARE COLUMN FOOTING. SEE DWG. S701 AND S704. COORDINATE PILASTER PIER REINFORCING WITH COLUMN BASE PLATE LOCATION.
6. EXTEND PILASTER REINFORCING 610 MM INTO PIER. DOWEL PILASTER BRICK WITH 2 #22 610MM INTO PIER AND 610 MM INTO PILASTER.

US Army Corps of Engineers
New York District

| Date | Description | Appr. |
|---|---|---|

U.S. ARMY ENGINEER DISTRICT
CORPS OF ENGINEERS
NEW YORK, NEW YORK

Designed by: GJC/SOD
Team by: JLW
Plot by:
Reviewed by:
Submitted by:
Date:
Title:
Drawing file no.:
Drawing code:
Plot date: 05-JAN-2005 16:34
Plot by: sdoerfler
Size: 00000x00000

File name: S:\Nelson\Hilary\Fort Hamilton\Office\Structural\Office S-701.dgn

PN. 52224
MILITARY POLICE STATION
FORT HAMILTON, NY

# FOUNDATION SECTIONS AND DETAILS - 2

Sheet reference number:
S-704

Submitted by: e2endfeb
petition-documents:/pw/pf1 hamilton/pf15:usafr:ft:ft:hamilton/pf15:usafr:ft:ft:hamilton/pf15 S-704.dgn
Plot Date: 05-JAN-2005 16:34

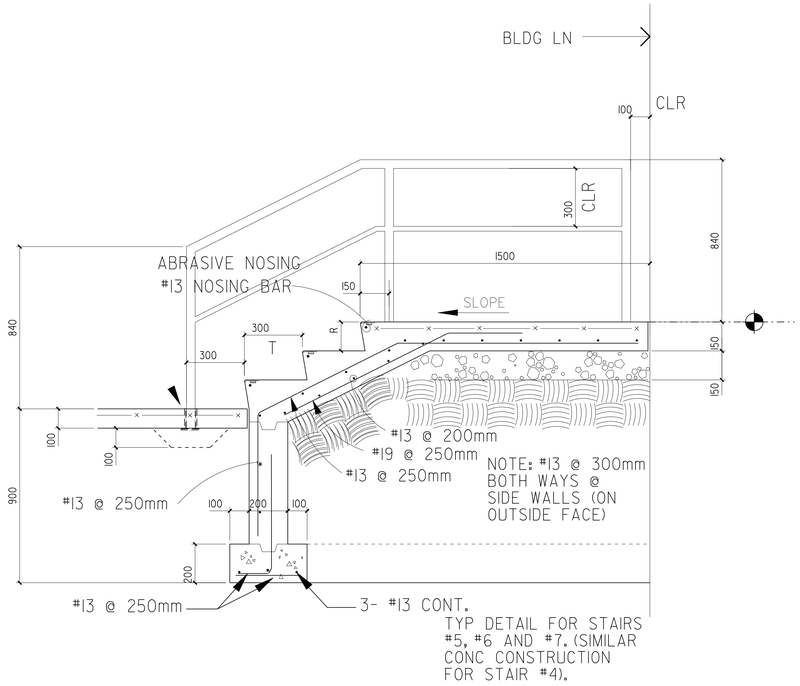


## EXTERIOR STAIR SECTION

SCALE NONE

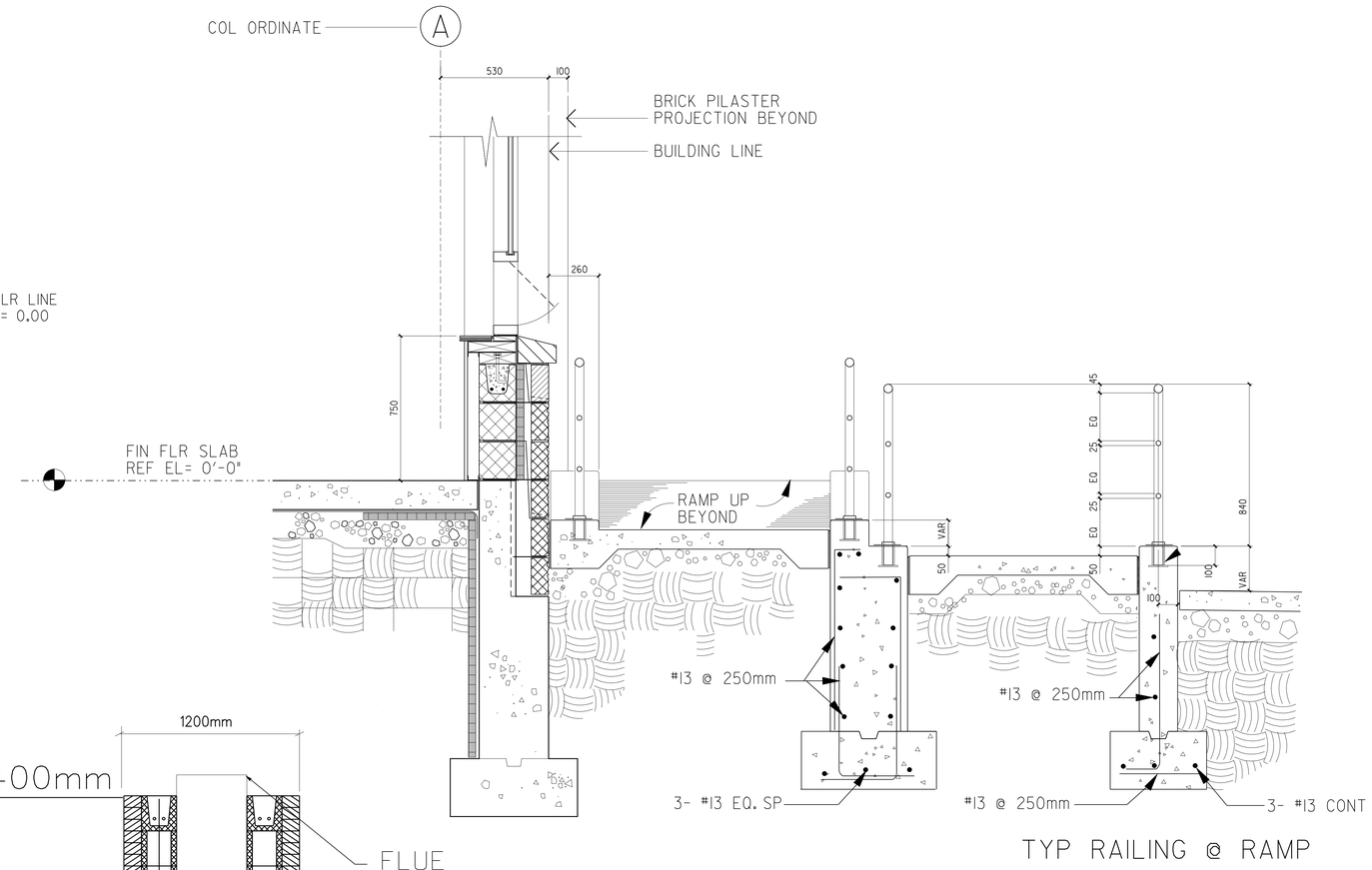


TYP RAILING @ RAMP

## CROSS SECTION @ RAMP

SCALE 1:10

NOTE
1- TOP OF RAMP FOOTING IS
A MINIMUM OF 965MM BELOW GRADE.

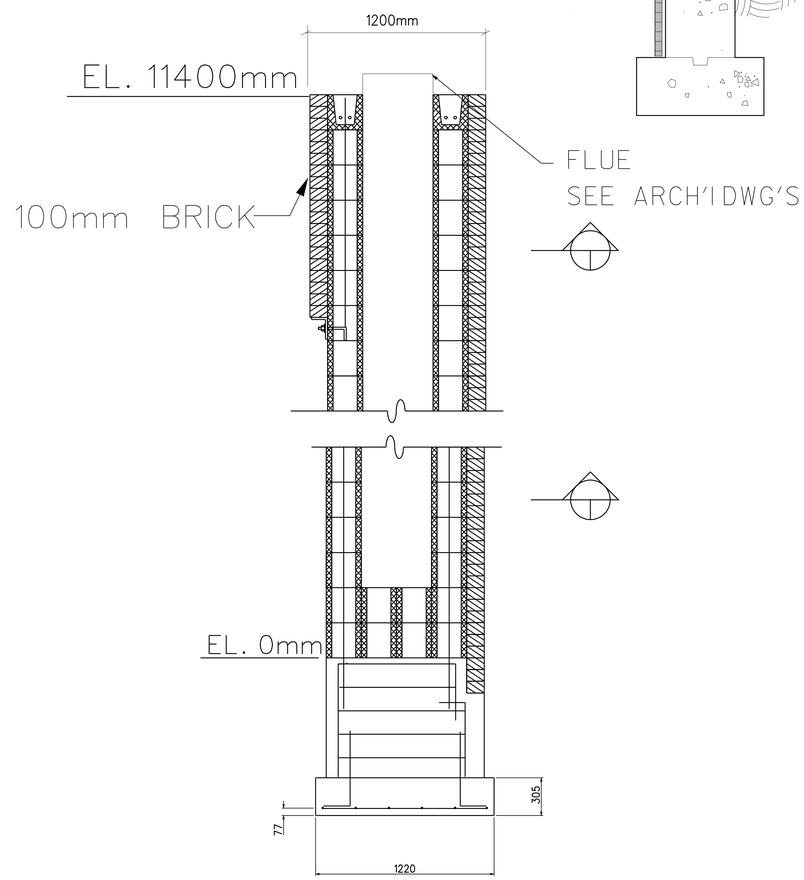


NOTE: ALL DIMENSIONS SHOWN ARE IN MILLIMETERS.

US Army Corps of Engineers
New York District

| Symbol | Description | Date | Appr. |
|---|---|---|---|

U.S. ARMY ENGINEER DISTRICT
CORPS OF ENGINEERS
NEW YORK, NEW YORK

Designed by: SOD
Dwn by: SOD
Ckd by:
Reviewed by:
Submitted by:
Date:
Size:
Rev:
Drawing file no.:
Drawing code:
Plot date: 05-JUN-2005 16:34
Plot by: sdonohue
Scale: 0.0000000000000
File name: S:\Benson\military\fortHamilton\MPSs\Structural\MPSs S-705.dgn

PN 52224
MILITARY POLICE STATION
FORT HAMILTON, NY

# FOUNDATION SECTIONS AND DETAILS - 3

Sheet reference number:
S-705

Submitted by: e3endfab
Plot Date: 05-JUN-2005 16:34
Saffiler:\admin\User\fort Hamilton\MPS\fortHamilton\MPS S-705.dgn

## LEGEND

- CATCH BASIN
- TREE
- LP ON CONCRETE PAD
- SEWER MANHOLE
- WATER MANHOLE
- UNKNOWN MANHOLE
- SIGN w/ ONE POST
- SIGN w/ TWO POSTS
- UTILITY POLE
- WATER VALVE
- AC — AIR CONDITIONER UNIT
- BOLLARD
- SHRUB or BUSH
- FIRE HYDRANT
- I= — INVERT ELEVATION
- R= — RIM ELEVATION
- CHAINLINK FENCE
- ELECTRIC
- WATER
- GAS
- STORM
- SANITARY
- MAJOR CONTOUR
- MINOR CONTOUR
- ABANDONED UTILITY

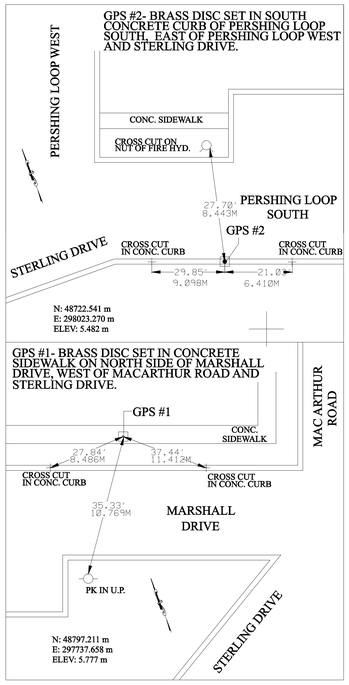


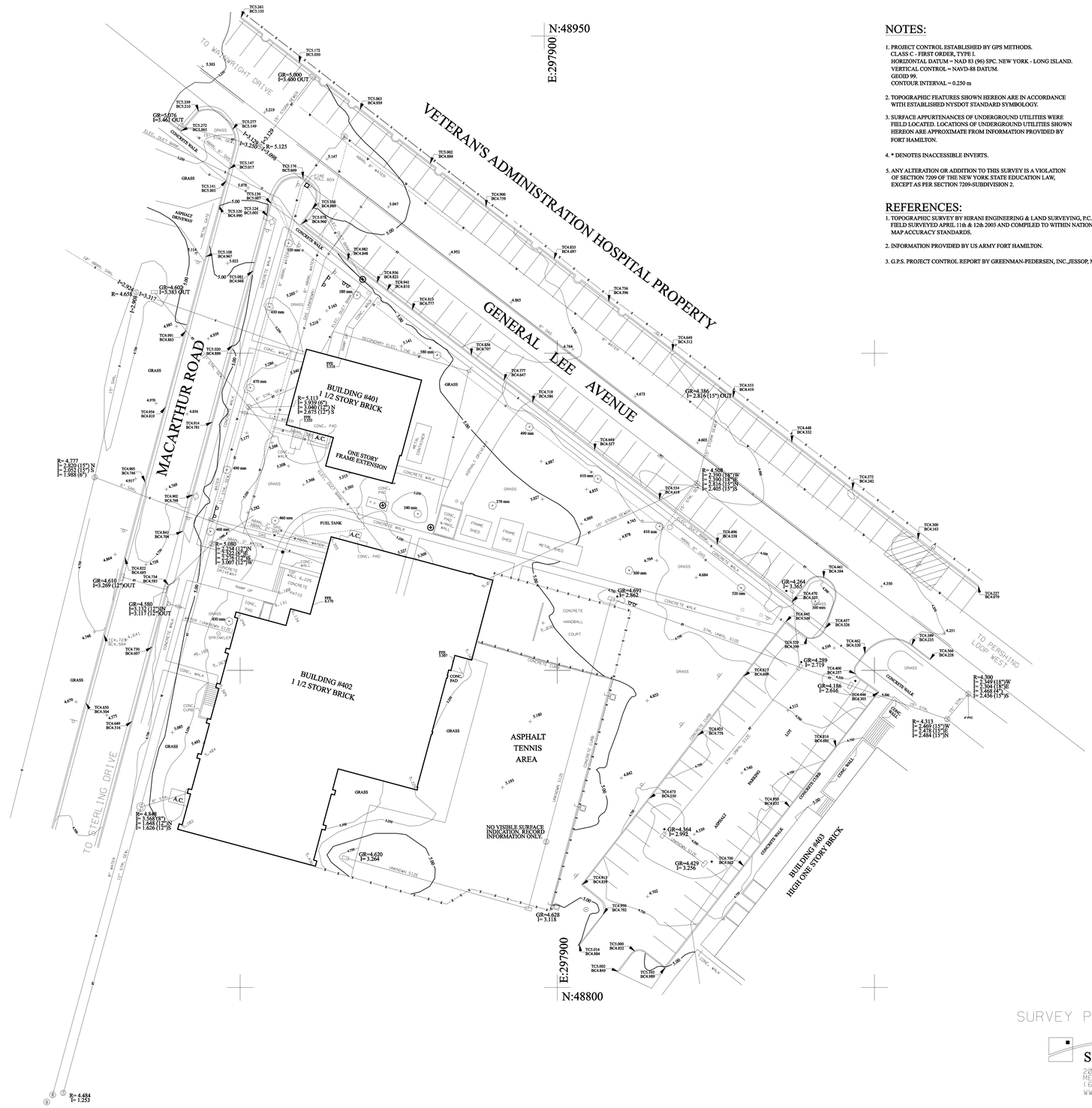


## NOTES:

1. PROJECT CONTROL ESTABLISHED BY GPS METHODS.
   CLASS C - FIRST ORDER, TYPE I.
   HORIZONTAL DATUM = NAD 83 (96) SPC. NEW YORK - LONG ISLAND.
   VERTICAL CONTROL = NAVD-88 DATUM.
   GEOID 99.
   CONTOUR INTERVAL = 0.250 m
2. TOPOGRAPHIC FEATURES SHOWN HEREON ARE IN ACCORDANCE WITH ESTABLISHED NYSDOT STANDARD SYMBOLOGY.
3. SURFACE APPURTENANCES OF UNDERGROUND UTILITIES WERE FIELD LOCATED. LOCATIONS OF UNDERGROUND UTILITIES SHOWN HEREON ARE APPROXIMATE FROM INFORMATION PROVIDED BY FORT HAMILTON.
4. * DENOTES INACCESSIBLE INVERTS.
5. ANY ALTERATION OR ADDITION TO THIS SURVEY IS A VIOLATION OF SECTION 7209 OF THE NEW YORK STATE EDUCATION LAW, EXCEPT AS PER SECTION 7209-SUBDIVISION 2.

## REFERENCES:

1. TOPOGRAPHIC SURVEY BY HIRANI ENGINEERING & LAND SURVEYING, P.C. FIELD SURVEYED APRIL 11th & 12th 2003 AND COMPILED TO WITHIN NATIONAL MAP ACCURACY STANDARDS.
2. INFORMATION PROVIDED BY US ARMY FORT HAMILTON.
3. G.P.S. PROJECT CONTROL REPORT BY GREENMAN-PEDERSEN, INC.,JESSOP, MD.

US Army Corps of Engineers
New York District

| SYMBOL | DESCRIPTION | DATE | APPR. |
|---|---|---|---|
| | A.C.O.E. COMMENTS | 05/20/03 | |

DESIGNED BY: | DATE: 04/17/03 | SIZE(REV.): A
DWN BY: G.R.S. | CKD BY: N.E.B. | DRAWING FILE NO.: | DRAWING CODE:
REVIEWED BY: | SUBMITTED BY: | PLOT DATE: 05/20/2003 | PLOT SYMBOL: | SCALE: 1= 250
FILE NAME:

U.S. ARMY ENGINEER DISTRICT
CORPS OF ENGINEERS
NEW YORK, NEW YORK

TOPOGRAPHIC SURVEY
OF BUILDINGS 401 AND 402 ENVIRONS
FORT HAMILTON MILITARY
POLICE STATION
BOROUGH OF BROOKLYN NEW YORK

SURVEY PREPARED BY:


SEAR•BROWN
201 OLD COUNTRY ROAD, SUITE 301
MELVILLE, NY 11747-3736
(631) 424-8600
WWW.SEARBROWN.COM

HIRANI ENGINEERING & LAND SURVEYING, P.C.
47 MINEOLA BLVD. 2ND FLOOR
MINEOLA, NEW YORK 11501
(516) 248-1010


SHEET
R-1