US ARMY CORPS OF ENGINEERS NEW YORK DISTRICT

FORT DRUM, NEW YORK

FORCE MODERNIZATION EDUCATION / TRANSITIONAL FACILITY

F O R C E M O D

PN 57708

DESIGNED BY:

US Army Engineer District, New York
Engineering Division Design Branch
Jacob K Javits Federal Building
26 Federal Plaza
New York, N.Y. 10278–0900

US Army Corps of Engineers New York District

U.S. ARMY ENGINEER DISTRICT CORPS OF ENGINEERS NEW YORK, NEW YORK

PN 57708 FORCE MODERNIZATION EDUCATION /TRANSITIONAL FACILITY FORT DRUM, NEW YORK

COVER SHEET

Sheet reference number: G–001

Submitted by: e3endnsh Plot Date: 04-AUG-2005 15:03
S:øfileroomømilitaryøFort DrumøForceMODøGeneraløSHEET FILESøForceMOD57708_G1001xxx.dgn

INDEX OF DRAWINGS

SHEET NO.	DRAWING TITLE
G-001	COVER SHEET
G-002	INDEX OF DRAWINGS
G-003	ABBREVIATIONS & SYMBOLOGY
	SURVEY
V-101	SURVEY
V-102	SURVEY
V-103	SURVEY
V-104	SURVEY
V-105	SURVEY
V-106	SURVEY
V-107	SURVEY
V-108	SURVEY
V-109	SURVEY
V-110	SURVEY
V-111	SURVEY
V-112	SURVEY
	GEOTECHNICAL
B-601	SUBSURFACE EXPLORATION - BORING LOGS
	CIVIL
CD-101	DEMOLITION PLAN
CS-101	SITE PLAN
CG-101	GRADING AND DRAINAGE PLAN
CG-102	GRADING AND DRAINAGE PLAN
CU-101	UTILITY PLAN
CE-101	EROSION AND SEDIMENT CONTROL PLAN
CE-102	EROSION AND SEDIMENT CONTROL PLAN
CS-501	FENCE DETAILS
CS-502	FENCE DETAILS
CS-503	FENCE DETAILS
CS-504	SITE DETAILS
CS-505	OUTLET STRUCTURE DETAILS
CP-501	SITE DETAILS PAVEMENT SECTIONS
CU-501	SITE DETAILS
CU-502	SITE DETAILS
CE-501	SOIL EROSION AND SEDIMENT CONTROL DETAILS
	STRUCTURAL
S-001	STRUCTURAL NOTES
S-101	FOUNDATION PLAN
S-102	FIRST FLOOR PLAN
S-103	SECOND FLOOR & ATTIC FLOOR PLANS
S-201	TYPICAL FRAME ELEVATIONS
S-401	ARMS VAULT PLAN & DETAILS
S-501	FOUNDATION SECTIONS & DETAILS
S-502	MISCELLANEOUS DETAILS

SHEET NO.	DRAWING TITLE
	ARCHITECTURAL
A-100	FIRST FLOOR PLAN
A-101	FIRST FLOOR PLAN (CONTINUED)
A-101A	SECOND FLOOR PLAN
A-102	ATTIC PLAN
A-103	ROOF PLAN & DETAIL
A-104	ROOF PLAN (CONTINUED) & DETAILS
A-105	FURNITURE PLAN
A-200	ELEVATIONS
A-201	ELEVATIONS
A-300	SECTIONS
A-301	LONGITUDINAL SECTION
A-400	STAIR ENLARGED PLANS & SECTIONS
A-401	STAIR DETAILS
A-402	ENLARGED INT. & EXT. STAIRS SECTIONS & DETAILS
A-403	ENLARGED TOILET FLOOR PLANS & DETAILS
A-403A	CERAMIC TILE LAYOUT
A-404	MILLWORK ELEVATIONS & DETAILS
A-500	WALL SECTIONS
A-501	MISCELLANEOUS DETAILS - 1
A-502	MISCELLANEOUS DETAILS - 2
A-503	MISCELLANEOUS DETAILS - 3
A-504	MISCELLANEOUS DETAILS - 4
A-505	ENLARGED CANOPY SECTION & DETAILS
A-506	PARTITION TYPES
A-507	PARTITION LATERAL SUPPORT DETAILS
A-508	MISCELLANEOUS DETAILS - 5
A-600	FINISH SCHEDULE
A-601	DOOR & LOUVER SCHEDULE AND DETAILS
A-602	DOOR & WINDOW SCHEDULE AND DETAILS
A-603	DOOR & WINDOW DETAILS
A-700	FIRST FLOOR PLAN REFLECTED CEILING
A-701	FIRST FLOOR PLAN REFLECTED CEILING (CONTINUED)
A-702	SECOND FLOOR PLAN REFLECTED CEILING
A-703	SUSPENDED CEILING DETAILS
A-800	INTERIOR & EXTERIOR SIGNAGE
A-801	INTERIOR & EXTERIOR SIGNAGE SCHEDULE
A-900	LIFE SAFETY PLAN- FIRST FLOOR PLAN
A-901	LIFE SAFETY PLAN - SECOND FLOOR PLAN

SHEET NO.	DRAWING TITLE
	FIRE PROTECTION
FA-100	FIRST FLOOR WEST FIRE ALARM PLAN
FA-101	FIRST FLOOR EAST FIRE ALARM PLAN
FA-102	SECOND FLOOR FIRE ALARM PLAN
FS-100	FIRST FLOOR WEST FIRE SPRINKLER PLAN
FS-101	FIRST FLOOR EAST FIRE SPRINKLER PLAN
FS-102	SECOND FLOOR FIRE SPRINKLER PLAN
	PLUMBING
P-001	LEGEND, SYMBOLS, NOTES & ABBREVIATIONS
P-100	1st FLR PLAN - PLUMBING (SHEET 1)
P-101	VEH PROC/ADMIN/CLASS RM 1st FLR PLAN - PLUMBING
P-102	VEH PROC/ADMIN/CLASS RM 2nd FLR PLAN - PLUMBING
P-103	1st FLR PLAN - STORM DRAIN (SHEET 1)
P-104	1st FLOOR PLAN - STORM DRAIN (SHEET 2)
P-105	2nd FLR PLAN - STORM DRAIN
P-400	PART PLAN - FIRST FLOOR PLUMBING (DCW & DHW)
P-401	PART PLAN - FIRST FLOOR PLUMBING (SEWER)
P-402	PART PLAN - 2nd FLR PLUMBING (DCW, DHW, SEWER)
P-500	DETAILS - PLUMBING
P-600	PLUMBING SCHEDULES AND SCHEMATICS
P-601	PLUMBING RISER DIAG. - (DCW & DHW)
P-602	PLUMBING RISER DIAGRAM (SEWER)
	MECHANICAL
M-001	SYMBOLS & ABBREVIATIONS HVAC
M-002	GENERAL NOTES
M-100	VEHICLE PROC. / ADMIN. / WHSE BUILDING, VEHICLE TAILPIPE EXHAUST SYSTEM
M-101	VEHICLE PROC. / ADMIN. / WHSE BUILDING, HEATING & VENTING PLAN
M-102	VEHICLE PROC. / ADMIN. / WHSE BUILDING, INFRA-RED HEATING PLAN 1
M-103	VEHICLE PROC. / ADMIN. / WHSE BUILDING, INFRA-RED HEATING PLAN 2
M-104	VEHICLE PROC. / ADMIN. / WHSE BUILDING, FIRST FLOOR HYDRONIC HEATING PIPING PLAN
M-105	VEHICLE PROC. / ADMIN. / WHSE BUILDING, SECOND FLOOR HYDRONIC HEATING PIPING PLAN
M-106	VEHICLE PROC. / ADMIN. / WHSE BUILDING, ADMIN AREA FIRST FLOOR HVAC PLAN
M-107	VEHICLE PROC. / ADMIN. / WHSE BUILDING, ADMIN AREA SECOND FLOOR HVAC PLAN
M-300	HVAC SECTIONS
M-400	FIRST FLOOR MECHANICAL ROOM PART PLAN
M-401	ATTIC HVAC PART PLAN
M-402	ATTIC PIPING PART PLAN
M-500	SEISMIC DETAILS - 1
M-501	SEISMIC DETAILS - 2
M-502	SEISMIC DETAILS - 3
M-503	MECHANICAL DETAILS - 1

SHEET NO.	DRAWING TITLE
	MECHANICAL (CONTINUED)
M-504	MECHANICAL DETAILS - 2
M-505	MECHANICAL DETAILS - 3
M-600	MECHANICAL SCHEDULES - 1
M-601	MECHANICAL SCHEDULES - 2
M-602	MECHANICAL SCHEDULES - 3
M-700	CONTROLS, AIR HANDLING UNIT, FLOWW DIAGRAM SHEET 1
M-701	CONTROLS, AIR HANDLING UNIT, FLOWW DIAGRAM SHEET 2
	ELECTRICAL/TELECOMMUNICATIONS
E-001	ELECTRICAL LEGEND, ABBREVIATIONS & GENERAL NOTES
E-101	FIRST FLOOR PLAN - LIGHTING I
E-102	FIRST FLOOR PLAN - LIGHTING II
E-103	SECOND FLOOR PLAN & ATTIC FLOOR PLAN - LIGHTING
E-104	FIRST FLOOR PLAN - POWER & COMMUNICATIONS I
E-105	FIRST FLOOR PLAN - POWER & COMMUNICATIONS II
E-106	SECOND & ATTIC FLOOR PLAN - POWER & COMMUNICATIONS
E-107	ROOF PLAN - LIGHTNING PROTECTION SYSTEM & GROUNDING SYSTEM I
E-108	ROOF PLAN - LIGHTNING PROTECTION SYSTEM & GROUNDING SYSTEM II
E-401	ELECTRICAL SITE PLAN
E-501	ELECTRICAL DETAILS I
E-502	ELECTRICAL DETAILS II
E-503	ELECTRICAL DETAILS III
E-504	ELECTRICAL DETAILS IV
E-601	SINGLE LINE DIAGRAM
E-602	PANEL SCHEDULES I
E-603	PANEL SCHEDULES II
E-604	PANEL SCHEDULES III
E-605	LIGHTING FIXTURE DETAILS
E-606	LIGHTING FIXTURE SCHEDULE & DETAILS

FILE NUMBER	DRAWING TITLE
7549-607	SITE PLAN (BUILDING1555)
7549-619	FLOOR PLAN (BUILDING 1555)
7549-620	ELEVATIONS (BUILDING 1555)
7549-621	ELEVATIONS AND SECTION (BUILDING 1555)

US Army Corps of Engineers
New York District

Symbol	Description	Date	Appr.
1	REVISION #1	11 AUG 2005	

Designed by: NAME
Dwn by: NAME
Ckd by: NAME
Reviewed by: NAME
Submitted by: NAME
Date: 00 XXX 2005
Scale: AS
Solicitation no.: DACA51-A-0000
Contract no.: DACA51-A-00-0000
Project Manager: Jane Doe
Plot Date: 11-AUG-2005 10:00
File name: S:\FILEROOM\MILITARY\FORT DRUM\FORCEMOD\GENERAL\SHEET FILES\90% SUBMISSION\FORCEMOD57708_GI002XX.DGN

U.S. ARMY ENGINEER DISTRICT
NEW YORK DISTRICT
NEW YORK, NEW YORK

FIN 57708
FORCE MODERNIZATION TRANSITIONAL FACILITY
FORT DRUM, NEW YORK

INDEX OF DRAWINGS

Sheet reference number:
G-002

SHEET FILE: S:\CADD\FORCEMOD\working files\FORCEMOD_SHEET_0000-S-0000-H.dgn

SUBMITTED BY: E3ENDFWB
S:\FILEROOM\MILITARY\FORT DRUM\FORCEMOD\GENERAL\SHEET FILES\90% SUBMISSION\FORCEMOD57708_GI002XX.DGN
PLOT DATE: 11-AUG-2005 13:00

ABBREVIATIONS

@	AT	DEG.	DEGREE	I.J.	ISOLATION JOINT	PTDHC	PAPER TOWEL DISPENSER/ RECPTACLE HANDICAPPED	U.O.N.	CERAMIC TILE
&	AND	D.S.	DOWNSPOUT	INSUL/ INSUL'G	INSULATION/ INSULATING	RAD	RADIUS	VBB	CENTERS/COOLING TOWER
A.B.	ANCHOR BOLT	DWG	DRAWING	INV	INVERT	REF	REFERENCE	VCT	CLEAR
ABV	ABOVE	EA	EACH	L	LAVATORY	REINF	REINFORCED	VERT	COPPER
ACST	ACOUSTIC - ACOUSTICAL	EIFS	EXTERIOR INSULATION FINISH SYSTEM	LB	POUND	REQ'D	REQUIRED	VEST	DETAIL
ACT	ACOUSTICAL CEILING TILE	EL/ELEV	ELEVATION	LH	LAVATORY HANDICAPPED	RM	ROOM	W/	WITH
AFF	ABOVE FINISHED FLOOR	ELEC	ELECTRICAL	LLV	LOG VERTICAL	R.O.	ROUGH OPENING	W/O	WITHOUT
AGG	AGGREGATE	EMG	EMERGENCY	LOUV-LVR	LOUVER	SCHED	SCHEDULE	WC	WATER CLOSET
ALUM./AL.	ALUMINUM	EQ	EQUAL	L.F.	LINEAR FOOT	SD	STACKED DRYER	WCH	WATER CLOSET HANDICAPPED
AMCA	AIR MOVING & AIR CONDITIONING INC.	EQUIP/EQPT	EQUIPMENT	LP	LOW POINT	SDH	SOAP DISPENSER HANDICAPPED	WD	WOOD
ARCH.	ARCHITECTURAL	EWC	ELECTRIC WATER COOLER	LT WT	LIGHTWEIGHT	SEC'Y	SECURITY	WDO	WINDOW
ASTM	AMERICAN SOCIETY FOR TESTING & MATERIALS	EXIST	EXISTING	MATR'L	MATERIAL	SECT	SECTION	WGL	WIRE GLASS
AWG	AMERICAN WIRE GAUGE	EXP	EXPANSION	MAX	MAXIMUM	SGR	STATIC GROUND RECEPTICAL	W.R.	WATER RESISTANT
BBH	BASE BOARD HEATER	EJ	EXPANSION JOINT	MECH	MECHANICAL	SH	SHOWER	WRGWB	WARET RESISTANT GYPSUM WALL BOARD
BH	BUMPER HOOK	EXT/EX	EXTERIOR	MET	METAL	SIM	SIMILAR	WWF	WELDED WIRE FABRIC
BLDG	BUILDING	E.W.	EMERGENCY EYE WASH AND DELUGE SHOWER	MG	MIRROR GLASS	SND	SANITARY NAPKIN DISPOSAL	WWM	WELDED WIRE MESH
BLK/BLKG.	BLOCK/BLOCKING	E.W.E.F.	EACH WAY EACH FACE	MIL	MILITARY	SNTD	SANITARY NAPKIN & TAMPON DISPENSER	Y.P.	YIELD POINT
BM	BEAM OR BENCH MARK	ETC	ETCETERA / AND SO FORTH	MIN	MINIMUM	SP.	SPACE		
B.O.	BOTTOM OF	FED SPEC	FEDERAL SPECIFICATION	MISC	MISCELLANEOUS	SPCG	SPACING		
BOT	BOTTOM	FD	FLOOR DRAIN	MO	MASONRY OPENING	SPEC	SPECIFICATION		
C/CL	CENTER LINE	FEC	FIRE EXTINGUISHER CABINET	MSRY	MASONRY	SS	SERVICE SINK		
CAB	CABINET	FF	FINISHED FLOOR	MPH	MILES PER HOUR	SSCG	STAINLESS STEEL CORNER GUARD		
CAP	CAPACITY	FIN	FINISHED, FINISH	NEMA	NATIONAL ELECTRICAL MANUFACTURERS ASSOCIATION	STA	STATION		
CEM	CEMENT	FIXT	FIXTURE	NIC	NOT IN CONTRACT	STAGG	STAGGERED		
CER	CERAMIC	FLR/FL	FLOOR	NFS	NON-FROST SUSCEPTIBLE	STD	STANDARD		
CH	COAT HOOK	FLSG	FLASHING	NTS	NOT TO SCALE	ST. STL	STAINLESS STEEL		
CHAN/	CHANNEL	FOUND/FDN	FOUNDATION	NO / #	NUMBER	STL	STEEL		
CI	CAST IRON	FR	FIRE RATED	NOM	NOMINAL	STRUCT/ STRUCT'L	STRUCTURAL		
CJ	CONTRACTION JOINT	FT	FOOT	OC	ON CENTER	SUSP	SUSPENDED		
CLG	CEILING	GA	GAUGE	OD	OUTSIDE DIAMETER	SYM	SYMMETRICAL		
CLO	CLOSET	GALV	GALVANIZED	P/PT	PAINTED/ PAINT	T&B	TOP & BOTTOM		
CMP	CORRUGATED METAL PIPE	GEN	GENERATOR	PART	PARTITION	TBD	TO BE DETERMINED		
CMU	CONCRETE MASONRY UNIT	GB	GRAB BAR	PERIPH	PERIPHERY	TEL	TELPHONE		
COL	COLUMN	GND	GROUND	PERIM	PERIMETER	T/G	TOP OF GRADE		
CONC	CONCRETE	GL	GLASS	PL	PLATE	TGL	TEMPERED GLASS		
CONN.	CONNECTION	GWB	GYPSUM WALL BOARD	PL GL	PLATE GLASS	THK./T	THICKNESS		
CONT	CONTINUOUS	H.C.	HANDICAPPED	PLYWD	PLYWOOD	T.O.M.	TOP OF MASONRY		
CT	CERAMIC TILE	HCL	HANDICAPPED LAVATORY	PN	PANEL	T.O.S.	TOP OF STEEL		
CTRS	CENTERS/COOLING TOWER	HM	HOLLOW METAL	PREFIN	PREFINISHED	T.O.W.	TOP OF WALL		
CL	CLEAR	HOR	HORIZONTAL	PT	POINT	TP	TOWEL PIN		
CU	COPPER	HP	HIGH POINT	PTD	PAPER TOWEL DISPENSER	TPH	TOILET PAPER HOLDER		
DET	DETAIL	HR	HANDRAIL	POSN	POSITION	TYP	TYPICAL		
DIA. / O	DIAMETER	HR	HOUR	PVC	POLY-VINYL CHLORIDE/ POINT OF VERTICAL CURVATURE	U	COLUMN		
DIM	DIMENSION	HT/HGT	HEIGHT	PVI	POINT OF VERTICAL INTERSECTION	UC	CONCRETE		
DN	DOWN	HW	HARDWARE	PVT	POINT OF VERTICAL TANGENCY	UG	CONNECTION		
DR	DOOR	ID	INDENTIFICATION/ INSIDE DIAMETER	PT	PORCELAIN TILE	UH	CONTINUOUS		

MATERIALS LEGEND

- EARTH
- CONCRETE
- BRICK
- ROUGH LUMBER
- FINISHED LUMBER
- RIGID INSULATION
- BATT INSULATION
- CRUSHED STONE
- CONCRETE MASONRY UNIT
- CERAMIC TILE/ PORCELAIN TILE
- METAL (LARGE SCALE)
- METAL (SMALL SCALE)
- WIRE MESH PARTITION
- SECURITY FENCE
- NEW GYPSUM WALL BOARD PARTITION ON METAL STUDS

GRAPHIC SYMBOLS

- 5 / 3 3 — SECTION, ELEVATION OR DETAIL NUMBER; SHEET ON WHICH DETAIL IS DRAWN; SHEET ON WHICH CONDITION IS LOCATED
- A / 1 — COLUMN NUMBER
- 101 — ROOM NUMBER
- 2 — OCCUPANCY LOAD, NUMBER OF PERSONS
- 200 — DOOR NUMBER
- W1 — WINDOW / LOUVER TYPE
- ELEVATION MARK
- 1 — REVISION NUMBER
- 1 — WALL TYPE
- E1 — EQUIPMENT TYPE

NOTE:
SEE ADDITIONAL ABBREVIATION AND LEGENDS PROVIDED IN EACH DISCIPLINE.

US Army Corps of Engineers
New York District

Mark	Description	Date	Appr.

Designed by: | Date: | Size: 22x36 | Date by: | Cad by: | Solicitation no.: | Reviewed by: | Contract no.: | Submitted by: | Plot date: 04-AUG-2005 15:04 | Plot by: e3endnsh | Scale: 1:20000/1:20000

File name: S:\filer-oom\military\fort drum\ForceMOD\general\SHEET FILES\ForceMOD57708_G1003xx.dgn

U.S. ARMY ENGINEER DISTRICT
CORPS OF ENGINEERS
NEW YORK, NEW YORK

PN 57708
FORCE MODERNIZATION EDUCATION (TRANSITIONAL FACILITY)
FORT DRUM, NEW YORK

ABBREVIATIONS, LEGEND & SYMBOLS

Sheet reference number:
G-003

Plot Date: 04-AUG-2005 15:04
Submitted by: e3endnsh
S:\filer-oom\military\fort DrumØForceMODØgeneralØSHEET FILESØForceMOD57708_G1003xx.dgn

Match Line V-102

GRID NORTH

0 10 20 30 40 50 M

SCALE

LAFAVE, WHITE & MCGIVERN
PHOTOGRAMMETRIC MAPPING

DRAWING NAME: EXPANDED FORCE MOD @ 5th & 5th St East.DGN

DATUMS & COORDINATE SYSTEM INFORMATION:
VERTICAL: NAVD 88
HORIZONTAL: NAD 83
COORD SYSTEM: NY STATE PLANE
ZONE: CENTRAL

HORIZONTAL DATUM: NORTH AMERICAN DATUM 1983/1996 (NAD 83/96)
PROJECTED ON THE NEW YORK STATE PLANE COORDINATE SYSTEM - CENTRAL ZONE
VERTICAL DATUM: NORTH AMERICAN DATUM OF 1988 (NAVD 88)
UNITS: METRIC

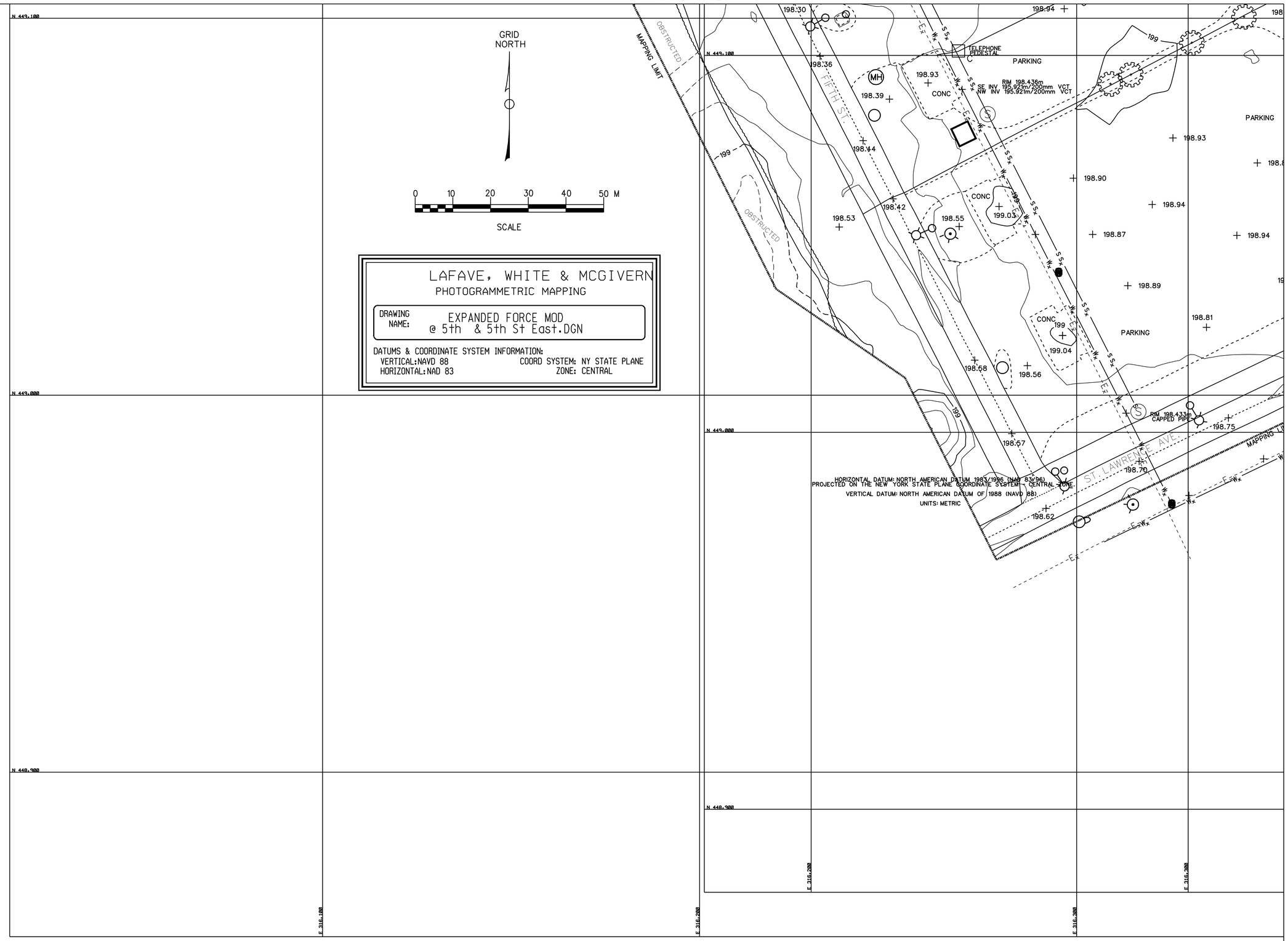

US Army Corps of Engineers
New York District

Mark	Description	Date	Appr.

U.S. ARMY ENGINEER DISTRICT
CORPS OF ENGINEERS
NEW YORK, NEW YORK

Designed by: | Date: | Size: 24x36 in.
Dwn by: | Ckd by: | Solicitation no.:
Reviewed by: | Contract no.:
Submitted by: | File name: E:\Tasks\military\Fort Drum\Forced\SOV\Cert\Cert.dgn | Plot date: 04-AUG-2005 14:13 | Plot by: E3ENDRMF | Scale: 500.000000:1.000000

FORCE MODERNIZATION EDUCATION /TRANSITIONAL FACILITY
FORT DRUM, NEW YORK

PN 5709

SURVEY

Sheet reference number:
V–101

SUBMITTED BY: E3ENDRMF PLOT DATE: 04-AUG-2005 14:13
S:\FILEROOM\MILITARY\FORT DRUM\FORCEMOD\CIVIL\R1.DGN

US Army Corps of Engineers
New York District

U.S. ARMY ENGINEER DISTRICT
CORPS OF ENGINEERS
NEW YORK, NEW YORK

PN 57708
FORCE MODERNIZATION EDUCATION /TRANSITIONAL FACILITY
FORT DRUM, NEW YORK

SURVEY

Sheet reference number:
V–102

SUBMITTED BY: E3ENDRMF PLOT DATE: 04-AUG-2005 14:13
S:\FILEROOM\MILITARY\FORT DRUM\FORCEMOD\CIVIL\R2.DGN

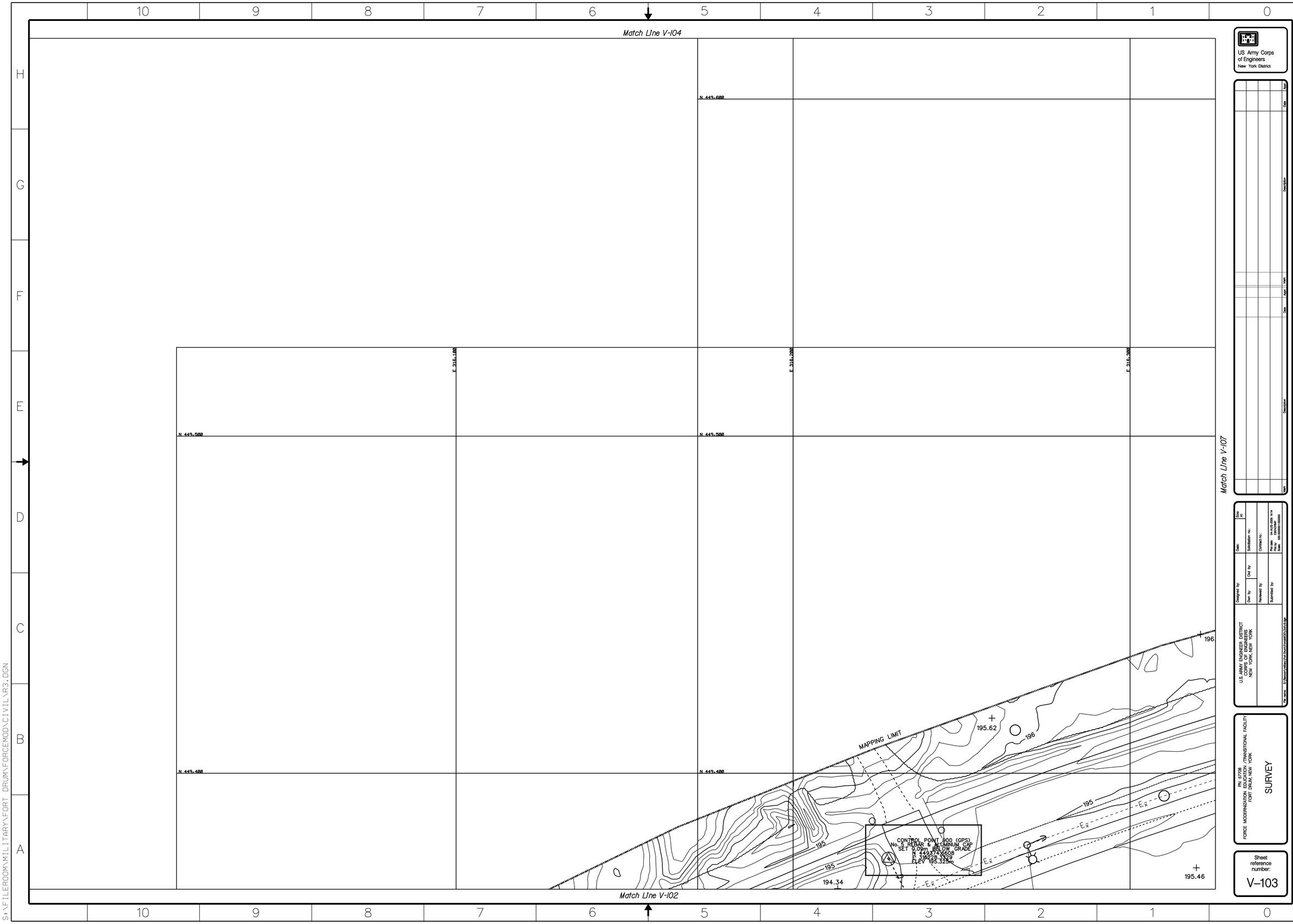

SUBMITTED BY: E3ENDRMF PLOT DATE: 04-AUG-2005 14:14
S:\FILEROOM\MILITARY\FORT DRUM\FORCEMOD\CIVIL\R3.DGN

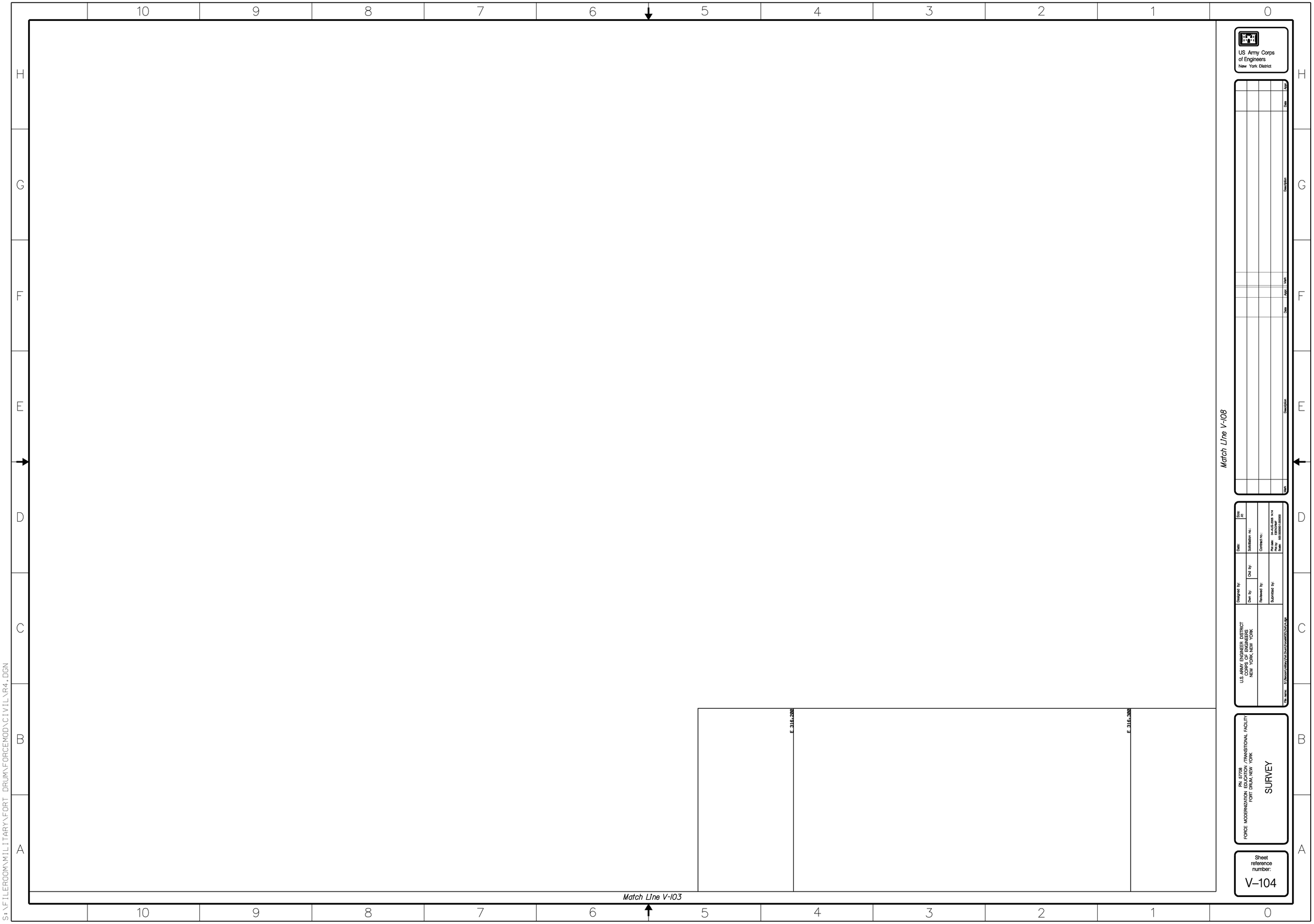

SUBMITTED BY: E3ENDRMF PLOT DATE: 04-AUG-2005 14:14
S:\FILEROOM\MILITARY\FORT DRUM\FORCEMOD\CIVIL\R4.DGN

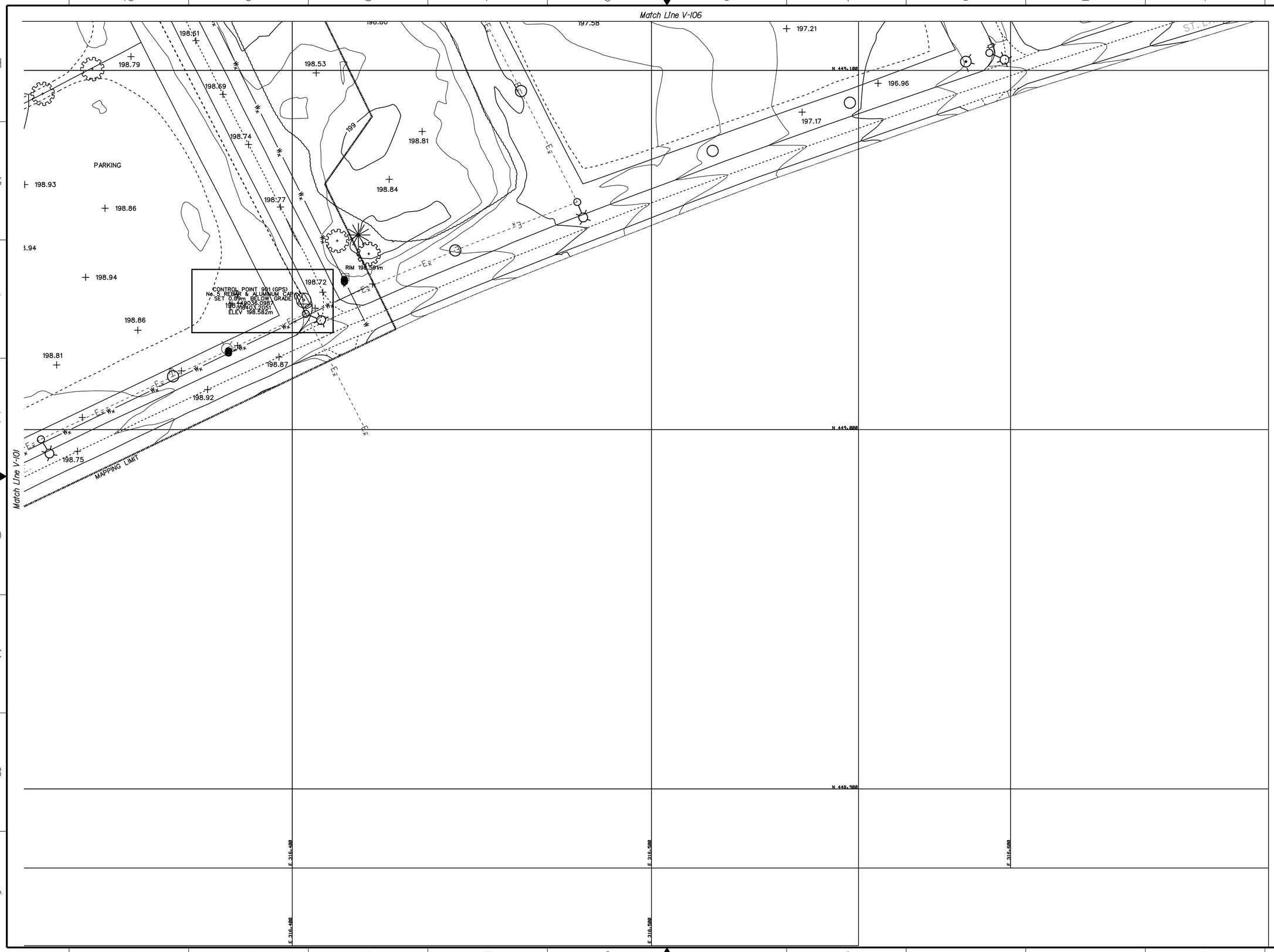

US Army Corps of Engineers
New York District

U.S. ARMY ENGINEER DISTRICT
CORPS OF ENGINEERS
NEW YORK, NEW YORK

Designed by:
Dwn by:
Ckd by:
Reviewed by:
Submitted by:
Date:
Solicitation no.:
Contract no.:
Plot date: 04-AUG-2005 14:14
Plot by: ESRI/DRAFT
Scale: 100.000000:1.000000

File name: S:\Tenpoint\military\Fort Drum\Forcemod\Civil\r5.dgn

PN 57708
FORCE MODERNIZATION EDUCATION /TRANSITIONAL FACILITY
FORT DRUM, NEW YORK

SURVEY

Sheet reference number:
V–105

SUBMITTED BY: E3ENDRMF PLOT DATE: 04-AUG-2005 14:14
S:\FILEROOM\MILITARY\FORT DRUM\FORCEMOD\CIVIL\R5.DGN

US Army Corps of Engineers
New York District

U.S. ARMY ENGINEER DISTRICT
CORPS OF ENGINEERS
NEW YORK, NEW YORK

PN 57708
FORCE MODERNIZATION EDUCATION /TRANSITIONAL FACILITY
FORT DRUM, NEW YORK

SURVEY

Sheet reference number:
V–106

SUBMITTED BY: E3ENDRMF
S:\FILEROOM\MILITARY\FORT DRUM\FORCEMOD\CIVIL\R6.DGN
PLOT DATE: 04-AUG-2005 14:14

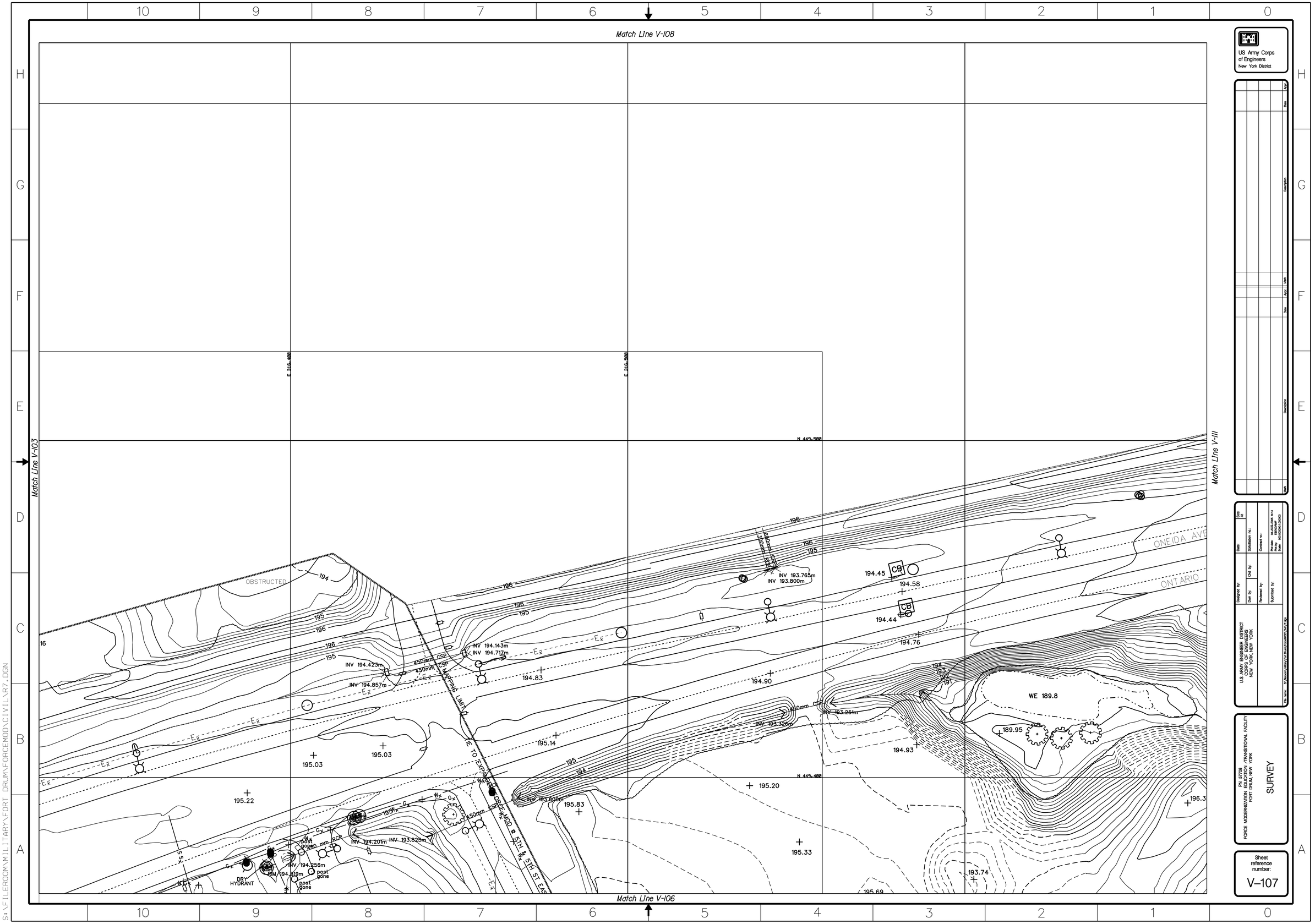

US Army Corps of Engineers
New York District

U.S. ARMY ENGINEER DISTRICT
CORPS OF ENGINEERS
NEW YORK, NEW YORK

PN 57708
FORCE MODERNIZATION EDUCATION /TRANSITIONAL FACILITY
FORT DRUM, NEW YORK

SURVEY

Sheet reference number:
V–107

SUBMITTED BY: E3ENDRMF
S:\FILEROOM\MILITARY\FORT DRUM\FORCEMOD\CIVIL\R7.DGN
PLOT DATE: 04-AUG-2005 14:14

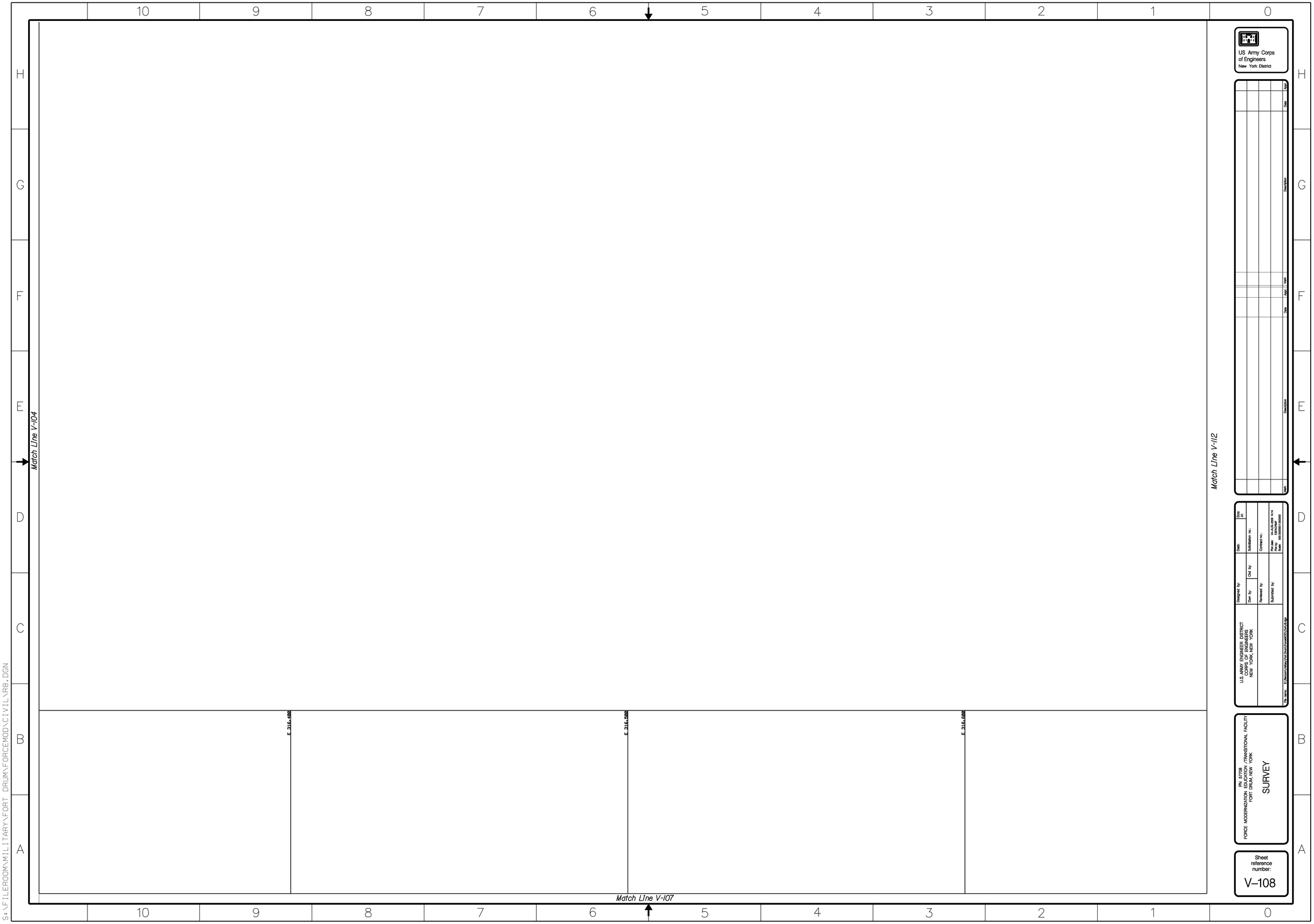

SUBMITTED BY: E3ENDRMF PLOT DATE: 04-AUG-2005 14:14
S:\FILEROOM\MILITARY\FORT DRUM\FORCEMOD\CIVIL\R8.DGN

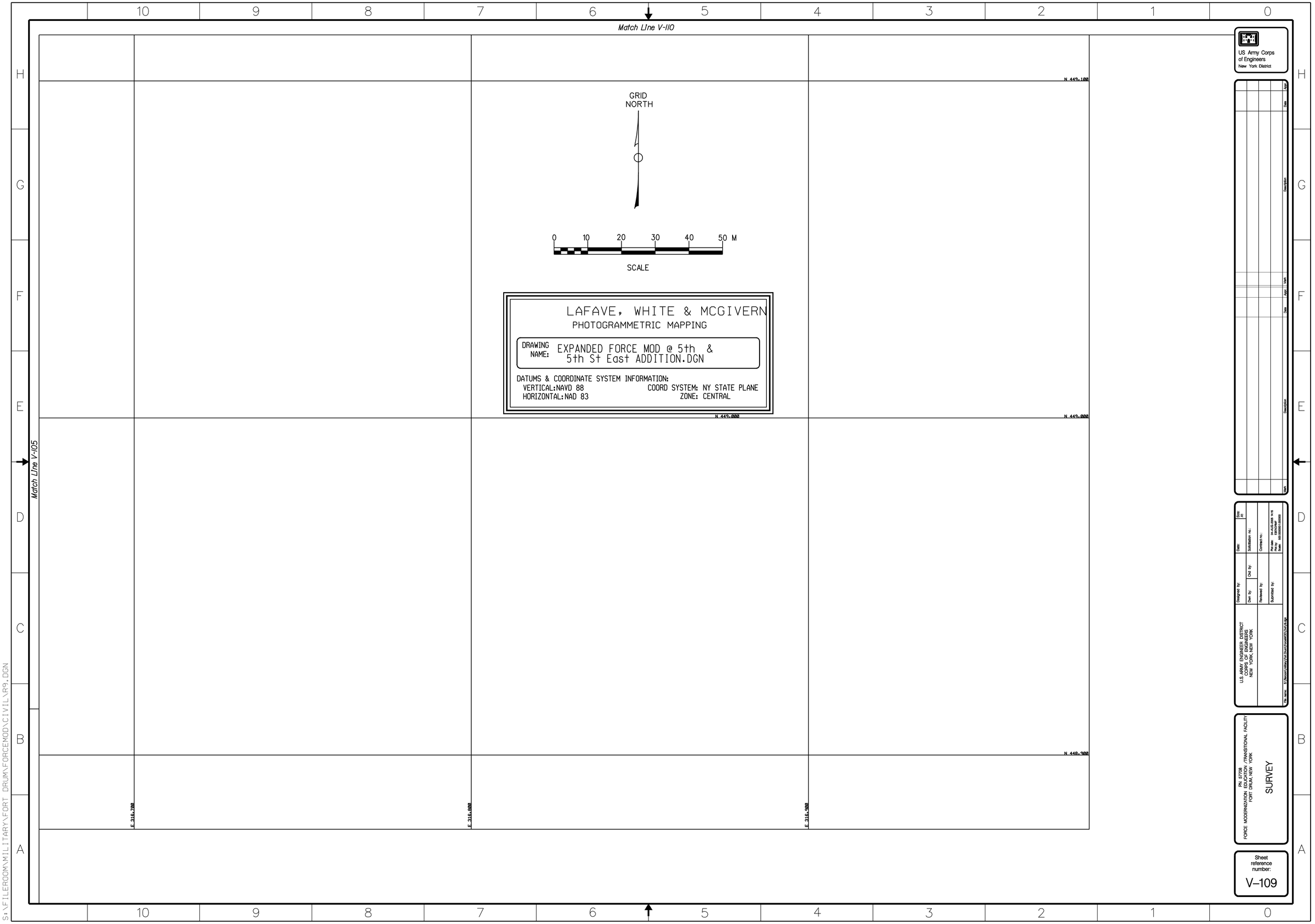

SUBMITTED BY: E3ENDRMF PLOT DATE: 04-AUG-2005 14:15
S:\FILEROOM\MILITARY\FORT DRUM\FORCEMOD\CIVIL\R9.DGN

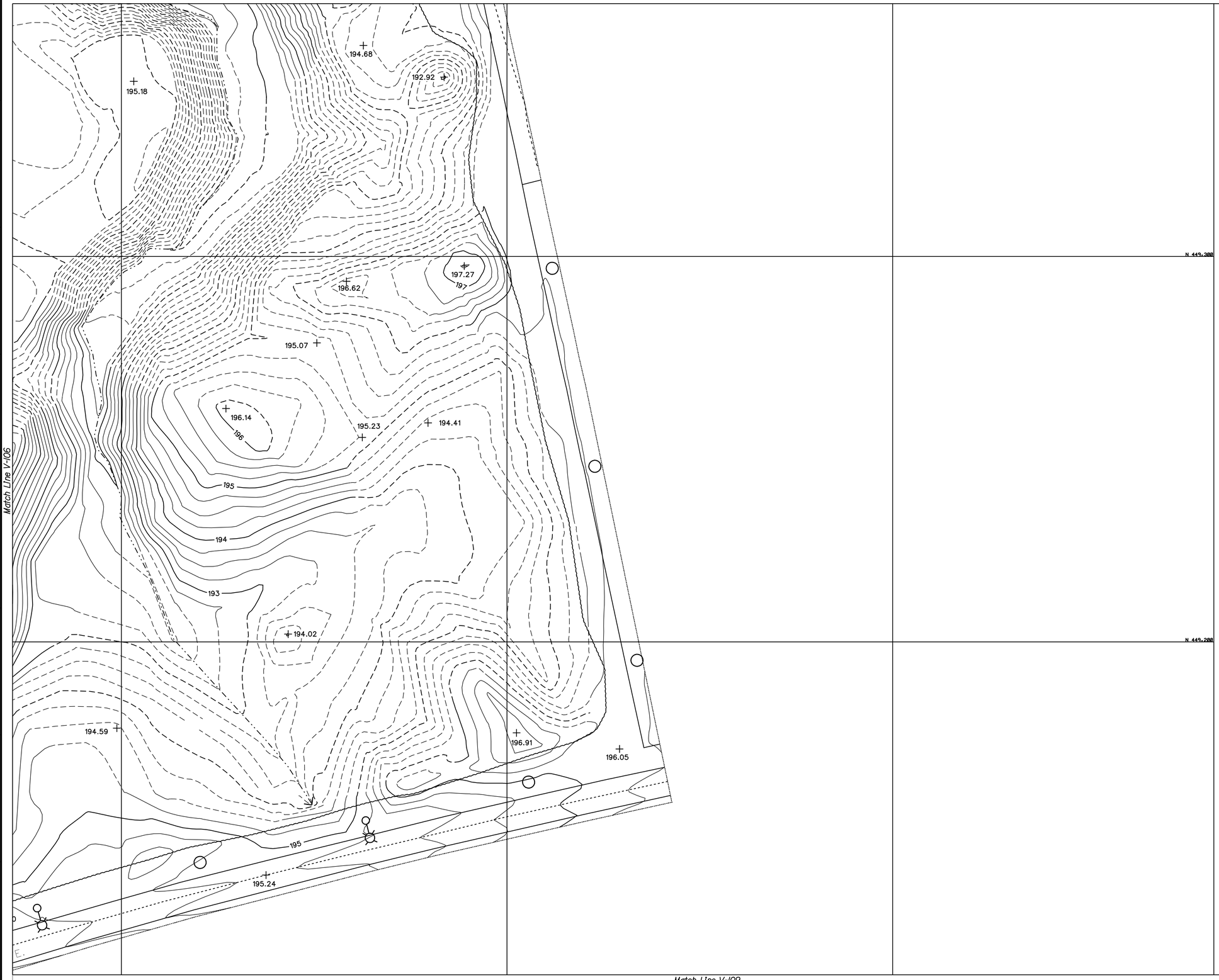

US Army Corps of Engineers
New York District

U.S. ARMY ENGINEER DISTRICT
CORPS OF ENGINEERS
NEW YORK, NEW YORK

Designed by:
Dwn by:
Ckd by:
Reviewed by:
Submitted by:
Date:
Solicitation no.:
Contract no.:
Plot date: 04-AUG-2005 14:15
Plot by: EBROOM
Scale: 100.000000:1.000000
File name: S:\Tasmon\military\Fort Drum\FORCEMOD\CIVIL\R10.dgn

PN 57708
FORCE MODERNIZATION EDUCATION /TRANSITIONAL FACILITY
FORT DRUM, NEW YORK

SURVEY

Sheet reference number:
V–110

SUBMITTED BY: E3ENDRMF PLOT DATE: 04-AUG-2005 14:15
S:\FILEROOM\MILITARY\FORT DRUM\FORCEMOD\CIVIL\R10.DGN

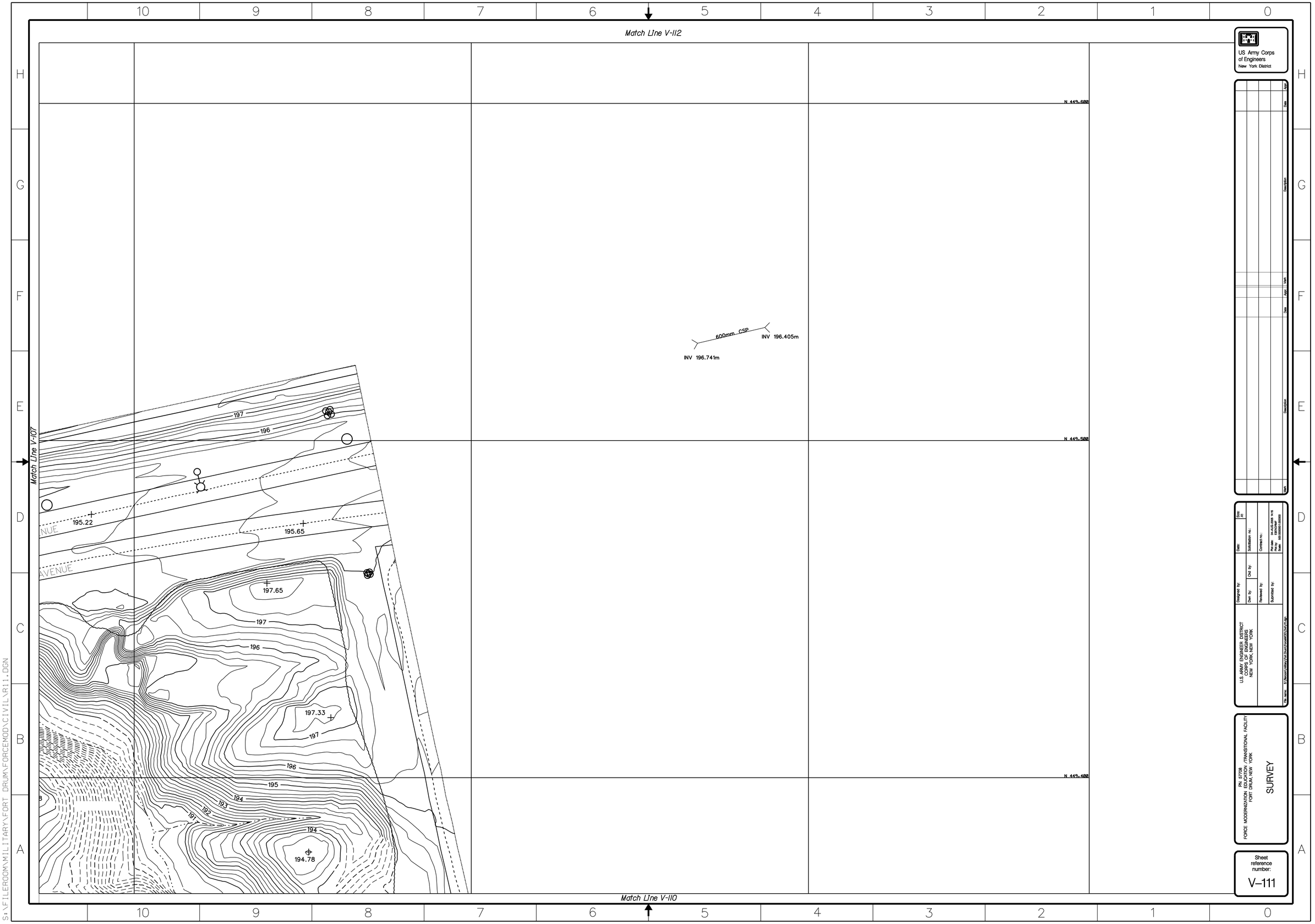

SUBMITTED BY: E3ENDRMF PLOT DATE: 04-AUG-2005 14:15
S:\FILEROOM\MILITARY\FORT DRUM\FORCEMOD\CIVIL\R11.DGN

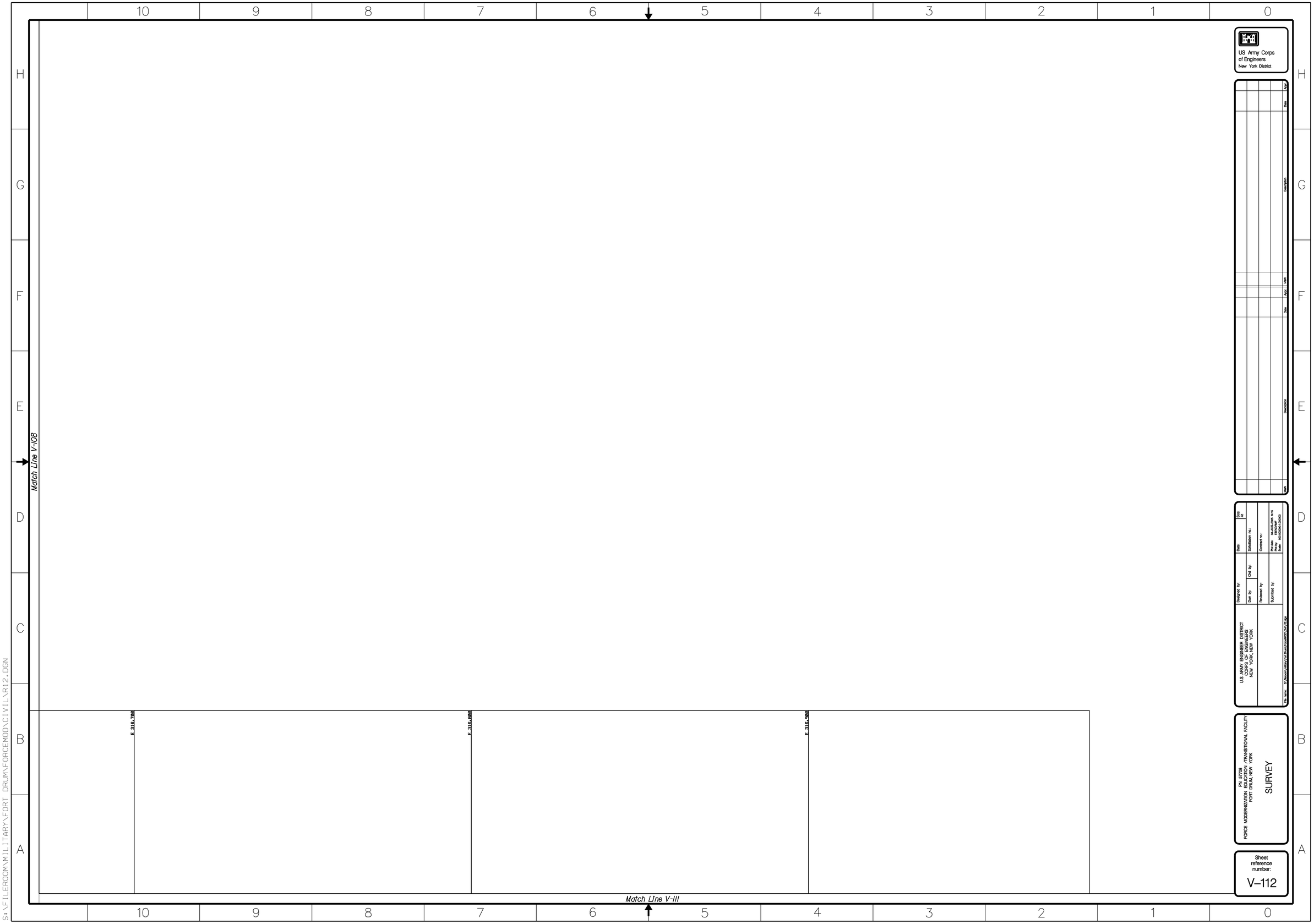

US Army Corps of Engineers
New York District

U.S. ARMY ENGINEER DISTRICT
CORPS OF ENGINEERS
NEW YORK, NEW YORK

Designed by:
Dwn by:
Ckd by:
Reviewed by:
Submitted by:
Date:
Scale: A1
Solicitation no.:
Contract no.:
Plot date: 04-AUG-2005 14:15
Plot by: ESRI/CHAP
Scale: 100.000000:1.000000

File name: S:\Terrain\military\Fort Drum\ForceMOD\Civil\V12.dgn

PN 57708
FORCE MODERNIZATION EDUCATION /TRANSITIONAL FACILITY
FORT DRUM, NEW YORK

SURVEY

Sheet reference number:
V–112

SUBMITTED BY: E3ENDRMF PLOT DATE: 04-AUG-2005 14:15
S:\FILEROOM\MILITARY\FORT DRUM\FORCEMOD\CIVIL\R12.DGN

FD05-1

Fort Drum, NY

ELEVATION	DEPTH	BLOWS 0.5ft	SAMPLE NUMBER	LEGEND	CLASSIFICATION OF MATERIALS (Description)	REMARKS (Drilling time, water loss, depth of weathering, etc., if significant)
					Concrete	-.09144m
		3 11 11	S1		Brown SAND, little Silt (SP)	Dry
	1	6 7 9	S2			Medium Density
		5 6 8	S3			
	2	3 10 10	S4			
		15 25 25	S5			
	3	23				TD = -3.048m
	4					

FD05-2

Fort Drum, NY

ELEVATION	DEPTH	BLOWS 0.5ft	SAMPLE NUMBER	LEGEND	CLASSIFICATION OF MATERIALS (Description)	REMARKS (Drilling time, water loss, depth of weathering, etc., if significant)
					Concrete	-.18288m
		5	S1		Brown SAND, little Silt (SP)	Dry
	1	5 6 5	S2			Medium Density
		4 5 4	S3			
	2	5 9 15	S4			
		22 22 32	S5			
	3	46				TD = -3.048m
	4					

FD05-3

Fort Drum, NY

ELEVATION	DEPTH	BLOWS 0.5ft	SAMPLE NUMBER	LEGEND	CLASSIFICATION OF MATERIALS (Description)	REMARKS (Drilling time, water loss, depth of weathering, etc., if significant)
		25			Crushed Stone	
		31	S1		Brown SAND, little Silt (SP)	-.27432m
	1	11 13	S2			Dry
		12 10	S3			Medium Density
	2	11 17	S4			
		22 28	S5			
	3	26 35 44				TD = -3.048m
	4					

FD05-4

Fort Drum, NY

ELEVATION	DEPTH	BLOWS 0.5ft	SAMPLE NUMBER	LEGEND	CLASSIFICATION OF MATERIALS (Description)	REMARKS (Drilling time, water loss, depth of weathering, etc., if significant)
		16			Crushed Stone	-.12192m
		7	S1		Brown SAND, little Silt (SP)	Dry
	1	6 5	S2			Medium Density
		8 10 12	S3			
	2	7 12 14	S4			
		25 15 10	S5			
	3	15 35 41 54				TD = -3.048m
	4					

FD05-5

Fort Drum, NY

ELEVATION	DEPTH	BLOWS 0.5ft	SAMPLE NUMBER	LEGEND	CLASSIFICATION OF MATERIALS (Description)	REMARKS (Drilling time, water loss, depth of weathering, etc., if significant)
					Concrete	-.18288m
		6	S1		Brown SAND, little Silt (SP)	Dry
	1	8 6 6	S2			Medium Density
		9 9 9	S3			
	2	25 36 31	S4			
		15 16 18	S5			
	3	50				TD = -3.048m
	4					

FD05-6

Fort Drum, NY

ELEVATION	DEPTH	BLOWS 0.5ft	SAMPLE NUMBER	LEGEND	CLASSIFICATION OF MATERIALS (Description)	REMARKS (Drilling time, water loss, depth of weathering, etc., if significant)
		6			Crushed Stone	
		8 10	S1		Brown SAND, little Silt (SP)	Dry
	1	13 10	S2			Medium Density
		5 5	S3			
	2	8 13	S4			
		22 34	S5			
	3	41				TD = -3.048m
	4					

FD05-7

Fort Drum, NY

ELEVATION	DEPTH	BLOWS 0.5ft	SAMPLE NUMBER	LEGEND	CLASSIFICATION OF MATERIALS (Description)	REMARKS (Drilling time, water loss, depth of weathering, etc., if significant)
		7			Crushed Stone	
		10	S1		Brown SAND, little Silt (SP)	-.1524m
	1	5 6	S2			Dry
		7 8	S3			Medium Density
	2	19 19	S4			
		34 4	S5			
	3	22 4 42				
		52 18	S6			
	4	56 2	S7		Light brown SAND, little Silt (SP)	-4.2672m
		12	S8			Moist
	5	19 22	S9			Wet
		56 52	S10			
	6					TD = -5.9436m
	7					

FD05-8

Fort Drum, NY

ELEVATION	DEPTH	BLOWS 0.5ft	SAMPLE NUMBER	LEGEND	CLASSIFICATION OF MATERIALS (Description)	REMARKS (Drilling time, water loss, depth of weathering, etc., if significant)
		6			Crushed Stone	
		5	S1		Brown SAND and SILT (SP)	-.1524m
	1	4 3	S2			Dry
		5 5	S3			Medium Density
	2	2 4 5	S4			
		10 16 31	S5			
	3	32 15 30 36 41	S6			
	4	42 50	S7			Wet
		24 33	S8			
	5	23 54	S9			
		21 33 52	S10			
	6					TD = -5.9436m
	7					

FD05-9

Fort Drum, NY

ELEVATION	DEPTH	BLOWS 0.5ft	SAMPLE NUMBER	LEGEND	CLASSIFICATION OF MATERIALS (Description)	REMARKS (Drilling time, water loss, depth of weathering, etc., if significant)
		4			Crushed Stone	-.06096m
		4 4	S1		Brown SAND, little Silt (SP)	Dry
	1	4 6	S2			Medium Density
		6 11	S3			
	2	11 12	S4			
		12 12	S5			
	3	4 12				
		18	S6			
	4	5	S7			
			S8			Moist
	5		S9			Wet
		14	S10			
	6	26 36 52				TD = -6.096m
	7					

TP05-1

Fort Drum, NY

ELEVATION	DEPTH	BLOWS 0.5ft	SAMPLE NUMBER	LEGEND	CLASSIFICATION OF MATERIALS (Description)	REMARKS (Drilling time, water loss, depth of weathering, etc., if significant)
					Crushed Stone	-.1524m
					Brown SAND, SILT (SP)	Dry
	1					Medium Density
	2					
	3					
	4					

TP05-2

Fort Drum, NY

ELEVATION	DEPTH	BLOWS 0.5ft	SAMPLE NUMBER	LEGEND	CLASSIFICATION OF MATERIALS (Description)	REMARKS (Drilling time, water loss, depth of weathering, etc., if significant)
					Crushed Stone	
					Brown SAND, little Silt (SP)	Dry
	1					Medium Density
	2					
	3					
	4					

TP05-3

Fort Drum, NY

ELEVATION	DEPTH	BLOWS 0.5ft	SAMPLE NUMBER	LEGEND	CLASSIFICATION OF MATERIALS (Description)	REMARKS (Drilling time, water loss, depth of weathering, etc., if significant)
					Crushed Stone	-.18288m
					Base Material	-.24384m
					Brown SAND, little Silt (SP)	
	1					
	2					
	3					
	4					

SUBSURFACE EXPLORATION NOTES

1. NOTES:

FOR BORING LOCATIONS SEE PLAN SHEETS CS-101.

SOILS WERE VISUALLY CLASSIFIED ACCORDING TO THE "UNIFIED SOIL CLASSIFICATION SYSTEM."

SUBSURFACE EXPLORATION WAS CONDUCTED BY NY DISTRICT, U.S. ARMY CORPS OF ENGINEERS

BLOWS/FOOT ON SAMPLE SPOON WITH 2 INCH O.D. AND 1.375 I.D. USING 140 POUND HAMMER DROPPED 30 INCHES, EXCEPT WHERE OTHERWISE NOTED.

2. CLASSIFICATION AND TERMS

BEDROCK: NATURAL SOLID MINERAL MATTER (ROCK) OCCURRING IN GREAT THICKNESS AND EXTENT IN ITS NATURAL LOCATION. NORMALLY UNDERLIES SOIL.

SOILS: SEDIMENT OR OTHER UNCONSOLIDATED PARTICLES PRODUCED BY THE PHYSICAL AND CHEMICAL WEATHERING OF ROCKS, AND WHICH MAY CONTAIN ORGANIC MATTER.

BOULDER ... larger than 8"

COBBLE OR SMALL STONE ... 8"-3"

GRAVEL: coarse...3" to 3/4"
medium...3/4" to 4.76 mm

SAND: coarse...4.76 mm to 2 mm
medium...2 mm to 0.42 mm
fine.....0.42 mm to 0.074 mm

SILT and CLAY...finer than 0.074 mm

Major component is shown with all letters CAPITALIZED.

Minor component % terms of total sample are as follows:

and.....40 to 50%
some....40 to 20%
little..20 to 10%
trace...10 to 1%

3. ABBREVIATIONS

WOR = WEIGHT OF RODS WOH = WEIGHT OF HAMMER
NR = No Recovery NS = Insufficient Sample

TABLE OF SOIL TESTING - ABBREVIATIONS

USCS = Unified Soil Classification Symbol
% G = Percent Gravel-sized particles
% S = Percent sand-sized particles
% F = Percent fines (silt and clay)
LL = Liquid Limit PL = Plastic Limit
PI = Plasticity Index (LL- PL)
% H2O = Water Content (Wt H2O / Wt Dry Soil)
SG = Specific Gravity

4. DATE OF EXPLORATION

June 2005

LEGEND

Concrete or Crushed Stone

Poorly graded SAND, or SAND and GRAVEL with little or no fines

US Army Corps of Engineers
New York District

Mark	Description	Date	Appr.

Designed by: | Date: | Size: A1
Dwn by: | Ckd by: | Solicitation no.:
Reviewed by: | Contract no.:
Submitted by: | File name: B-601.dgn | File format: MicroStation V8 | Date: 09-AUG-2005 14:53 | Plot scale: 1:1000000000

U.S. ARMY ENGINEER DISTRICT
CORPS OF ENGINEERS
NEW YORK, NEW YORK

DES. BR. CIVIL ENG. DES. SEC.
GEOTECHNICAL TEAM
CENAN-EN-DC

FORCE MODERNIZATION / TRANSITIONAL FACILITY
PN: 57708
FY05 / FY07 / FY09
FORT DRUM, NEW YORK

SUBSURFACE EXPLORATION BORING LOGS

Sheet reference number:
B-601

SUBMITTED BY: E3ENDSVC
S:\FILEROOM\MILITARY\FORT DRUM\FORCEMOD\STRUCTURAL\SHEET FILES\FORCEMOD57708_B-601BOR.DGN
PLOT DATE: 09-AUG-2005 14:53

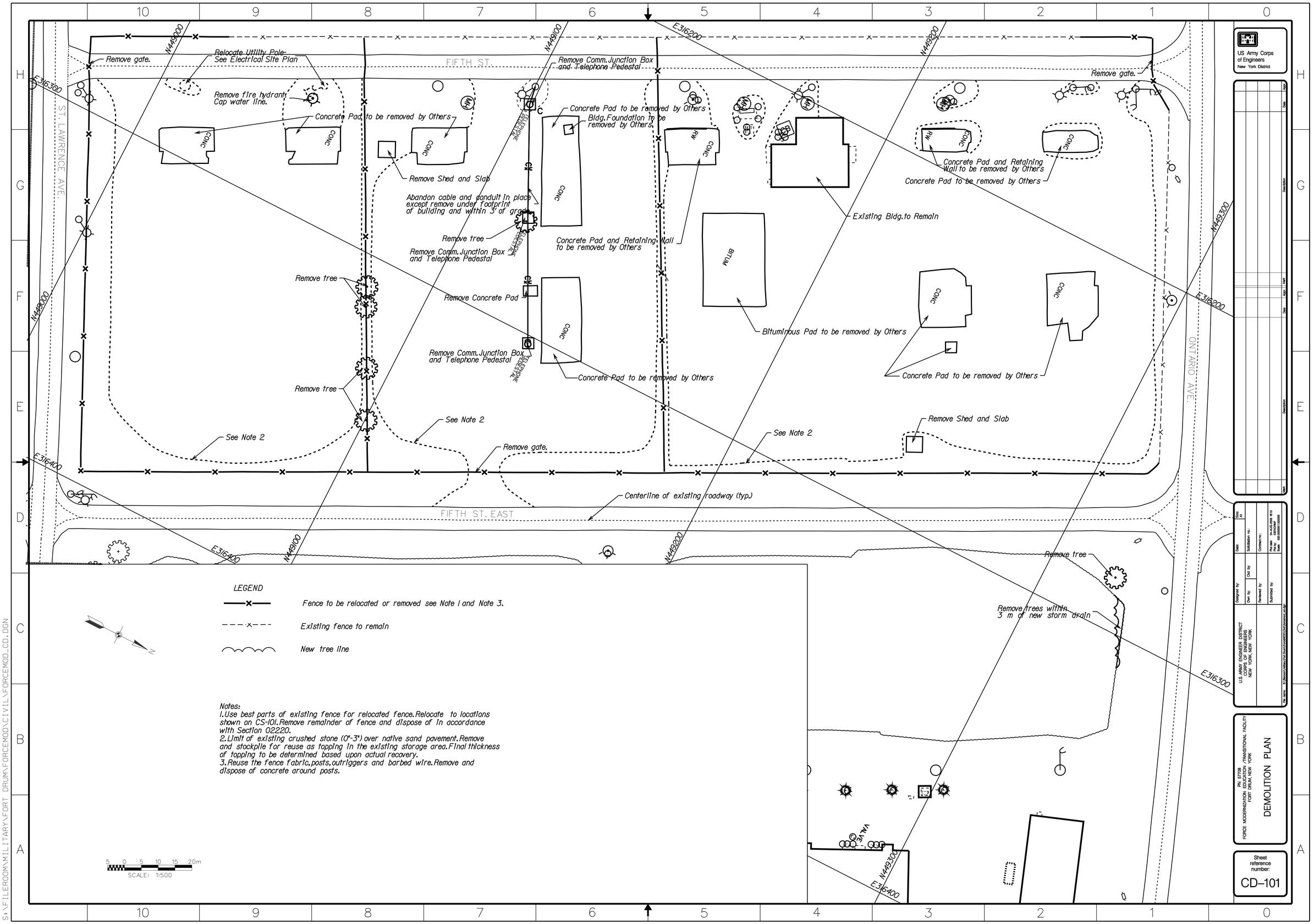

Notes:
1. Use best parts of existing fence for relocated fence. Relocate to locations shown on CS-101. Remove remainder of fence and dispose of in accordance with Section 02220.
2. Limit of existing crushed stone (0"-3") over native sand pavement. Remove and stockpile for reuse as topping in the existing storage area. Final thickness of topping to be determined based upon actual recovery.
3. Reuse the fence fabric, posts, outriggers and barbed wire. Remove and dispose of concrete around posts.

SUBMITTED BY: E3ENDRMF
S:\FILEROOM\MILITARY\FORT DRUM\FORCEMOD\CIVIL\FORCEMOD_CD.DGN
PLOT DATE: 04-AUG-2005 16:13

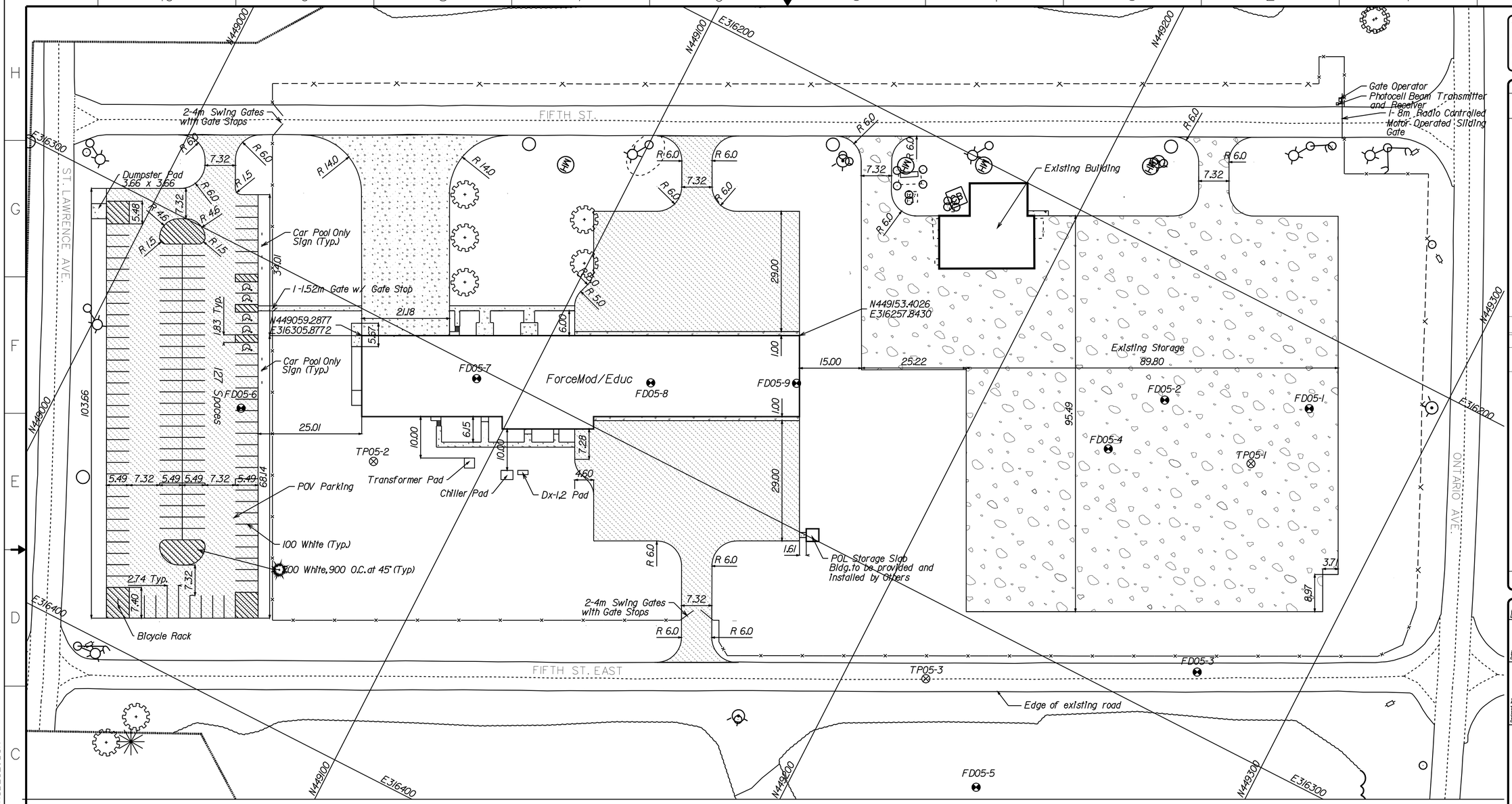

LEGEND

- Bituminous Pavement
- Concrete
- Native sand with crushed stone topping from stockpiled material
- Relocated 6' High Chain Link Fence with 3 Strands Of Barbed Wire
- FD05-7 Boring
- TP05-3 Test Pit
- Japanese Flowering Crabapple/ Malus floribunda

SCALE: 1:500

Notes:
1. Sidewalks around building are 1.22m wide except sidewalks to double doors without a post in the center which are 1.83m and sidewalks to double door with a post in the middle which are 2.63m. Sidewalk at the forklift ramp is 2.46m wide.
2. Gate stops shall hold gates in the open position.
3. Topsoil and seed all areas enclosed by Fifth St, Ontario Ave, Fifth St East and St. Lawrence Avenue which are not paved or do not have a structure.
4. See Sheet V-103 and V-105 for horizontal control points and benchmarks.

US Army Corps of Engineers
New York District

U.S. ARMY ENGINEER DISTRICT
CORPS OF ENGINEERS
NEW YORK, NEW YORK

Designed by: Date:
Dwn by: Ckd by: Solicitation no.:
Reviewed by: Contract no.:
Submitted by: Plot date: 04-AUG-2005 16:13 Plot scale: 1:500 Size: 36X50000 Sheet: 00/00000/00000
File name: S:\Mission Military\Fort Drum\Forcemod\Civil\forcemod_cs.dgn

PN 57135
FORCE MODERNIZATION EDUCATION / TRANSITIONAL FACILITY
FORT DRUM, NEW YORK

SITE PLAN

Sheet reference number:
CS-101

PLOT DATE: 04-AUG-2005 16:13
SUBMITTED BY: E3ENDRMF
S:\FILEROOM\MILITARY\FORT DRUM\FORCEMOD\CIVIL\FORCEMOD_CS.DGN

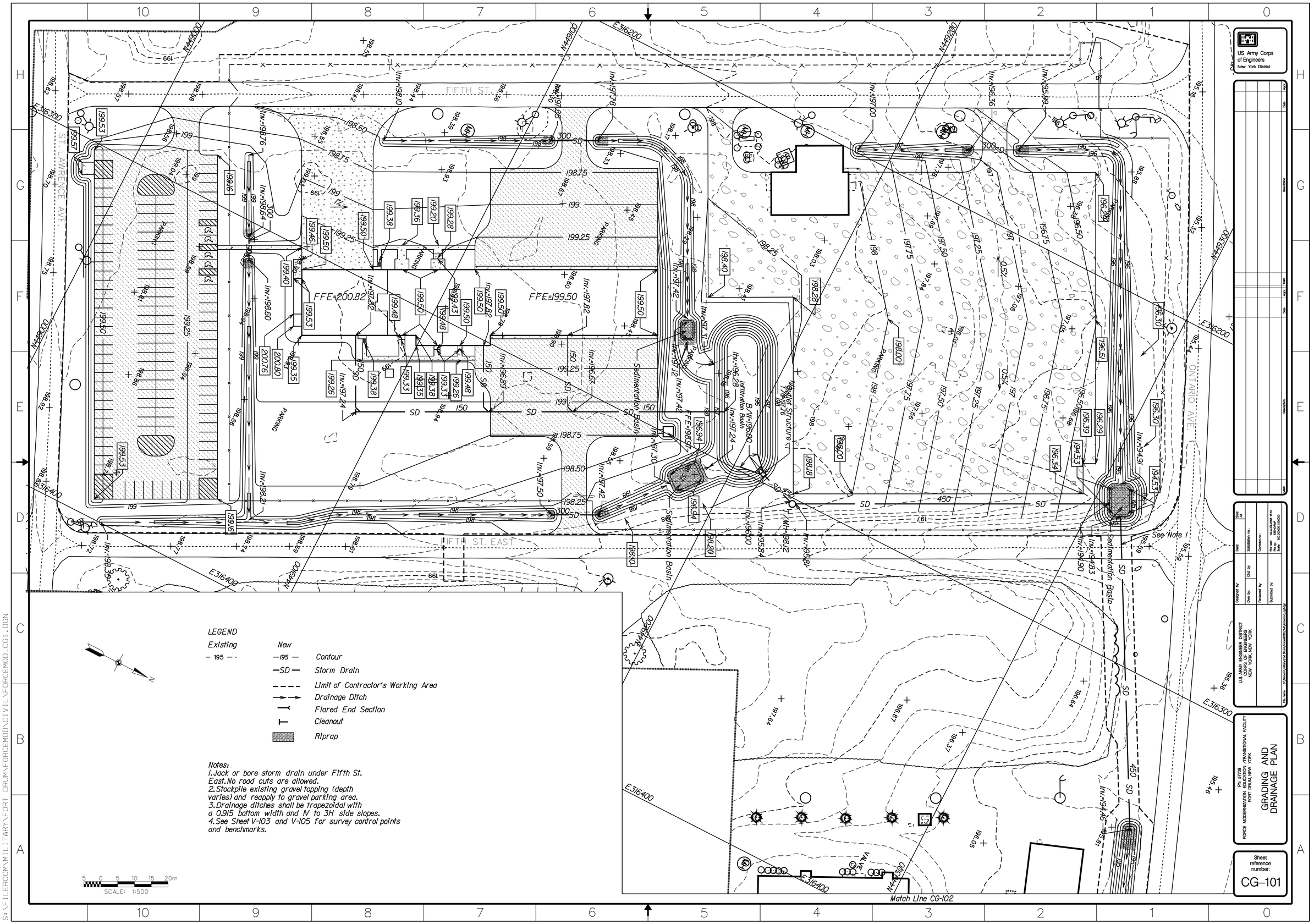

SUBMITTED BY: E3ENDRMF
S:\FILEROOM\MILITARY\FORT DRUM\FORCEMOD\CIVIL\FORCEMOD_CG1.DGN
PLOT DATE: 04-AUG-2005 16:13

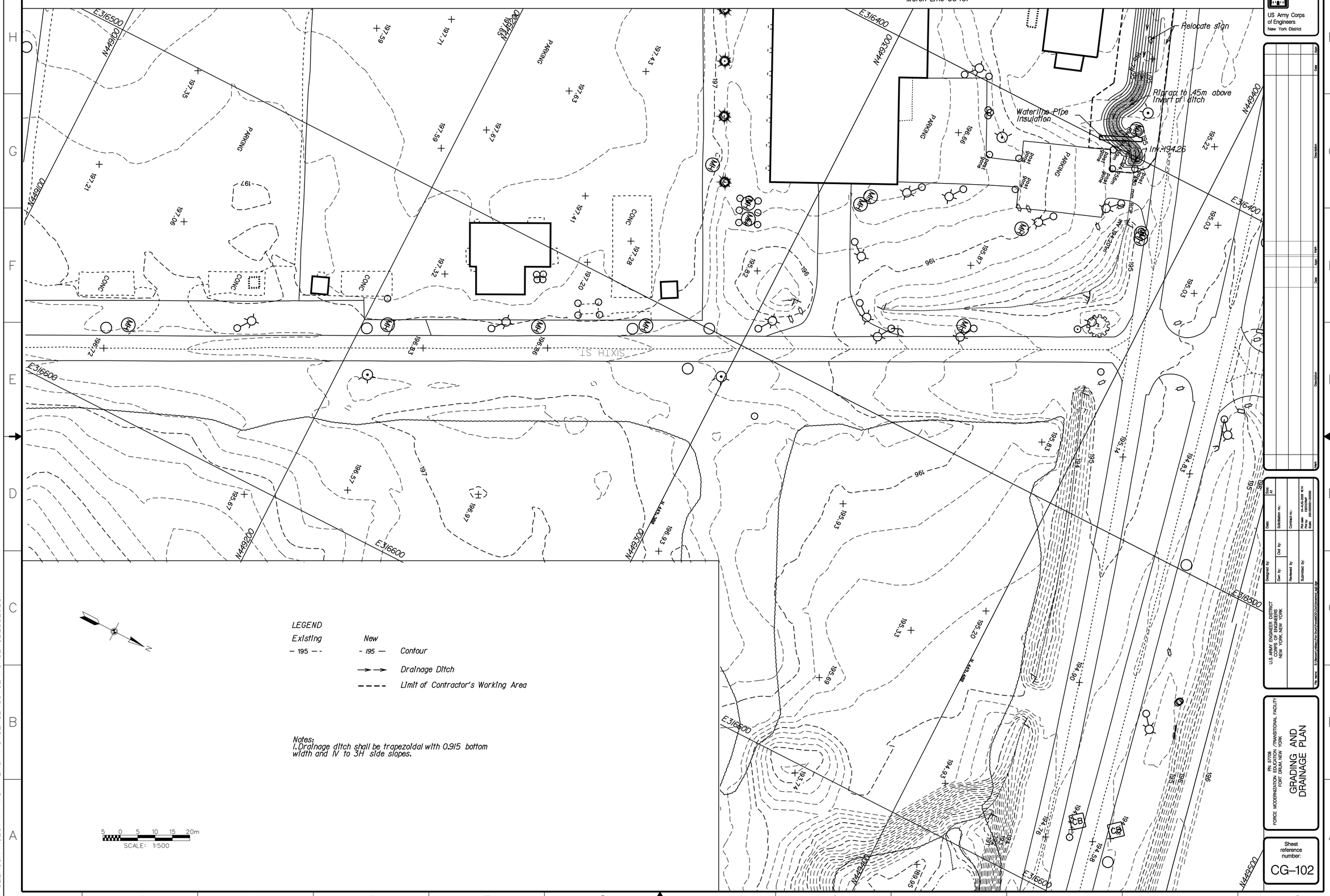
Match Line CG-101
Relocate sign
Riprap to .45m above invert of ditch
Waterline Pipe Insulation
Inv.=194.25
SIXTH ST
PARKING
CONC
LEGEND
Existing
New
195
Contour
Drainage Ditch
Limit of Contractor's Working Area
Notes:
1.Drainage ditch shall be trapezoidal with 0.915 bottom width and 1V to 3H side slopes.
SCALE: 1:500
US Army Corps of Engineers
New York District
U.S. ARMY ENGINEER DISTRICT
CORPS OF ENGINEERS
NEW YORK, NEW YORK
FORCE MODERNIZATION EDUCATION /TRANSITIONAL FACILITY
FORT DRUM, NEW YORK
GRADING AND DRAINAGE PLAN
Sheet reference number:
CG-102
SUBMITTED BY: E3ENDRMF
S:\FILEROOM\MILITARY\FORT DRUM\FORCEMOD\CIVIL\FORCEMOD_CG2.DGN
PLOT DATE: 04-AUG-2005 16:14

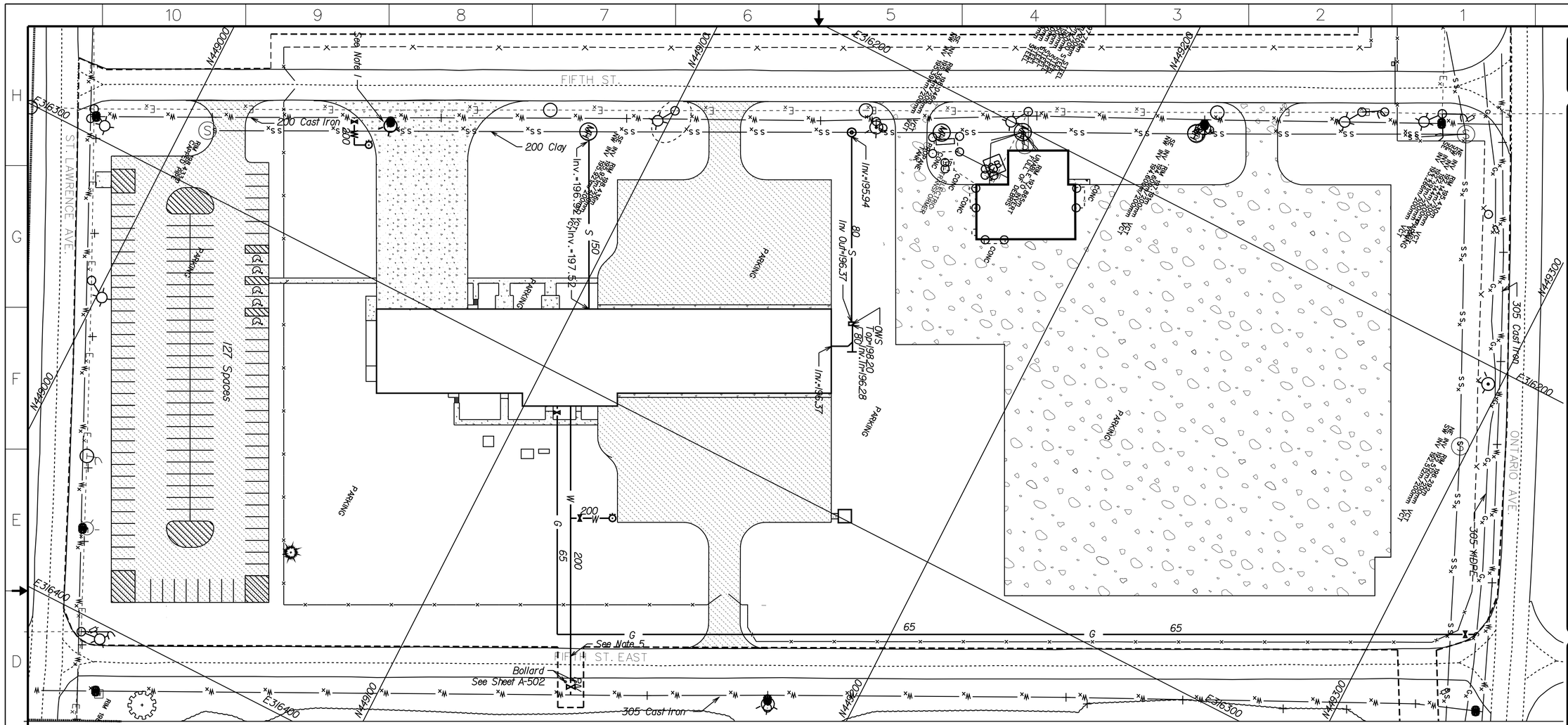

Legend

Existing	New	
SSx	S	Sanitary Line
MH		Sanitary Manhole
Wx	W	Water Line
Gx	G	Gas Line
		Gate Valve
	PIV	Post Indicator Valve (PIV)
		Fire Hydrant
	OWS	Oil-Water Separator
		Cleanout

Notes:
1. Close valve and remove valve box and hydrant. Provide a thrust block on the branch line.
2. New fire hydrants shall have a 127 mm Storz fire pumper connection.
3. Contractor shall verify the hydrant flow tests prior to designing the fire sprinkler system.
4. The PIV shall be monitored through the fire alarm panel.
5. Jack or bore the water line under Fifth Street East. No road cuts allowed.

SCALE: 1:500

U.S. ARMY ENGINEER DISTRICT
CORPS OF ENGINEERS
NEW YORK, NEW YORK

Designed by: | Date:
Dwn by: | Ckd by: | Solicitation no.:
Reviewed by: | Contract no.:
Submitted by: | Plot date: 04-AUG-2005 16:14 | Plot scale: 1:1 | Design file: 000\000001\000000

File name: S:\Transportation\Military\Fort Drum\Forcemod\Civil\Forcemod_Cu.dgn

FORCE MODERNIZATION EDUCATION (TRANSITIONAL FACILITY)
FORT DRUM, NEW YORK

UTILITY PLAN

PN 57708

Sheet reference number:
CU–101

PLOT DATE: 04-AUG-2005 16:14
SUBMITTED BY: E3ENDRMF
S:\FILEROOM\MILITARY\FORT DRUM\FORCEMOD\CIVIL\FORCEMOD_CU.DGN

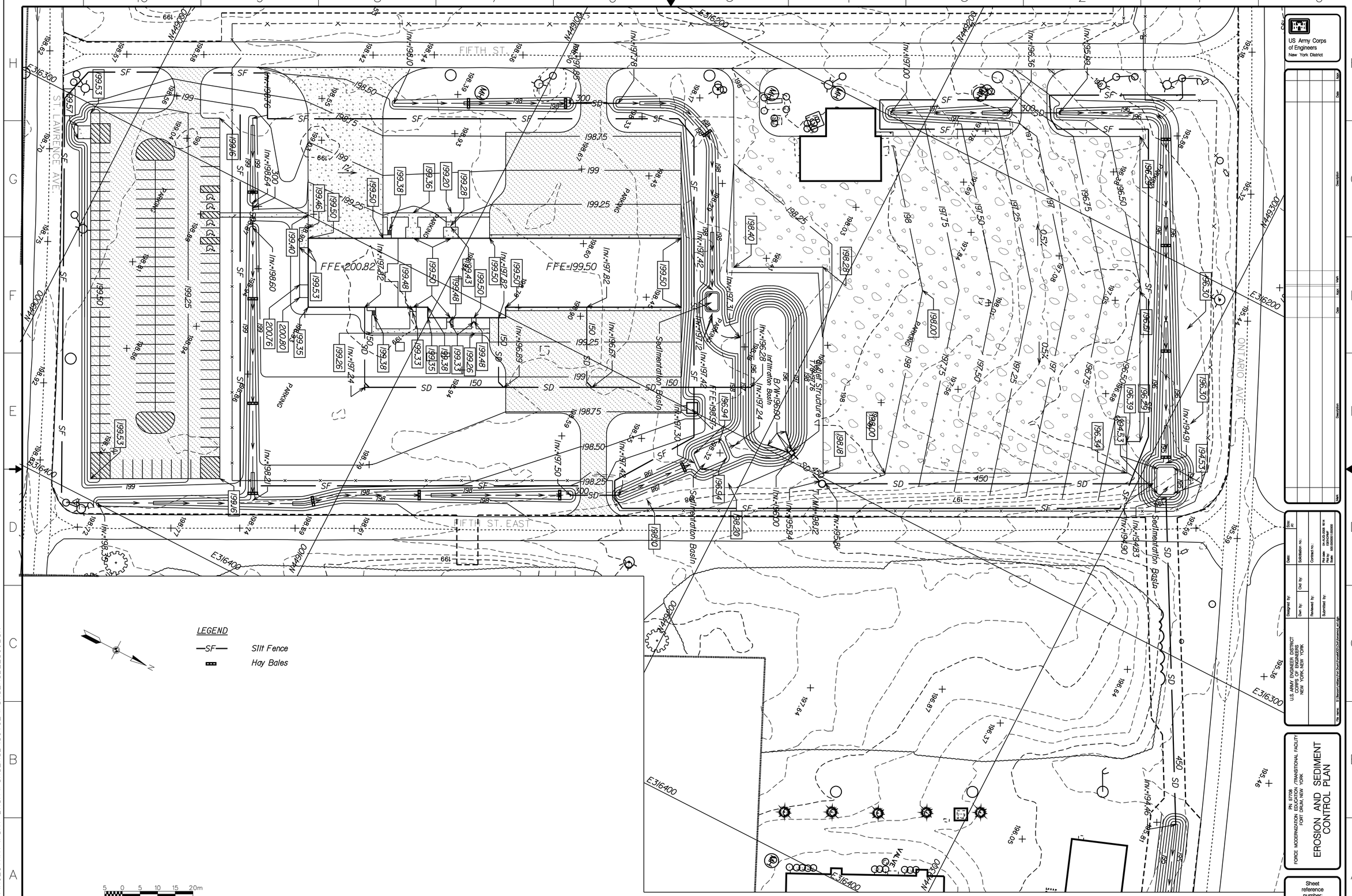

PLOT DATE: 04-AUG-2005 16:14

SUBMITTED BY: E3ENDRMF

S:\FILEROOM\MILITARY\FORT DRUM\FORCEMOD\CIVIL\FORCEMOD_EC1.DGN

SUBMITTED BY: E3ENDRMF PLOT DATE: 04-AUG-2005 16:14
S:\FILEROOM\MILITARY\FORT DRUM\FORCEMOD\CIVIL\FORCEMOD_CE2.DGN

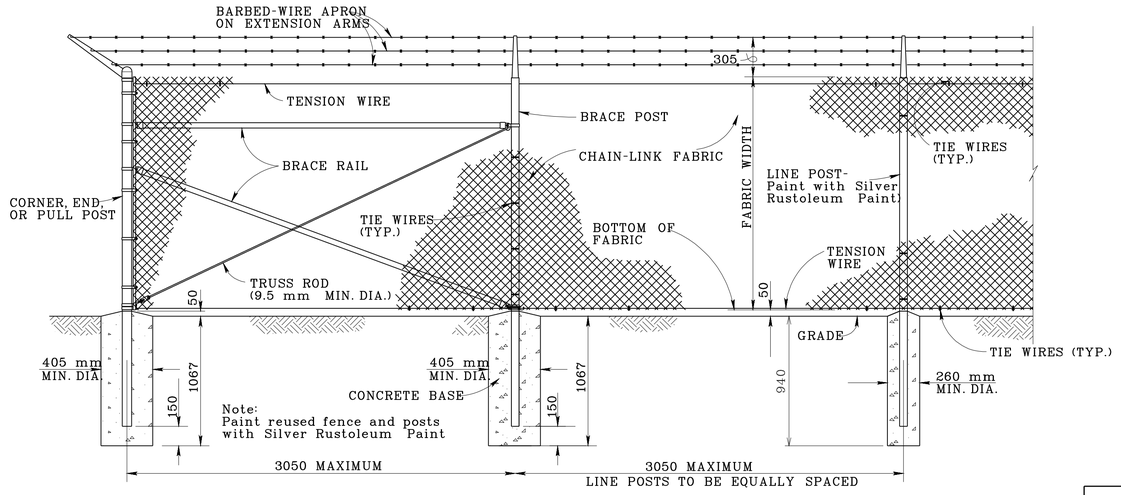

CHAIN-LINK SECURITY FENCE DETAIL

NO SCALE

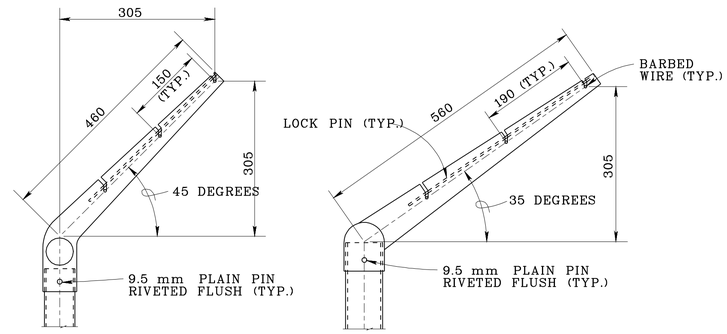

LINE POST

CORNER POST

EXTENSION ARM DETAILS

NO SCALE

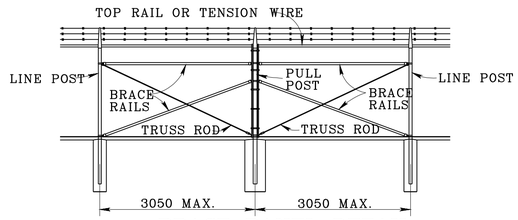

BRACE PANEL DETAIL

NO SCALE

NOTE:
PROVIDE BRACE PANEL WHENEVER STRAIGHT RUNS EXCEED 152.4 m.

STEEL POST SCHEDULE*			
USE AND SECTION	MINIMUM OUTSIDE DIMENSIONS (NOMINAL)		
	FABRIC LESS THAN 1830	FABRIC 1830 TO 2440	FABRIC OVER 2440
CORNER, END & PULL POSTS			
TUBULAR - ROUND	60.3 mm O.D.	73.0 mm O.D.	101.6 mm O.D.
TUBULAR - SQUARE	50.8 mm SQ.	63.5 mm SQ.	76.2 mm SQ.
C-SECTION (ROLL-FORMED)	88.9 mm x 88.9 mm	88.9 mm x 88.9 mm	———
LINE POSTS			
TUBULAR - ROUND	48.2 mm O.D.	60.3 mm O.D.	73.0 mm O.D.
H-SECTION	57.1 mm x 43.1 mm	57.1 mm x 42.1 mm	57.1 mm x 43.1 mm
C-SECTION (ROLL-FORMED)	47.6 mm x 41.2 mm	57.1 mm x 43.1 mm	———
BRACE RAILS			
TUBULAR - ROUND	42.3 mm O.D.		
TUBULAR - SQUARE	38.1 mm O.D.		
H-SECTION	41.2 mm x 38.1 mm		
C-SECTION (ROLL-FORMED)	41.2 mm x 31.7 mm		

*APPLIES WHERE NEW POSTS OR BRACE RAILS ARE REQUIRED.

NOTES:

1. DETAILS SHOWN ARE TO CLARIFY REQUIREMENTS AND ARE NOT INTENDED TO LIMIT OTHER TYPES OF FENCE SECTIONS AND METHODS OF INSTALLATION.
2. WIRE TIES, RAILS, POSTS, AND BRACES SHALL BE CONSTRUCTED ON THE SECURE SIDE OF THE FENCE ALIGNMENT. CHAIN-LINK FABRIC SHALL BE PLACED ON THE OPPOSITE SIDE OF THE SECURE AREA.
3. C-SECTION POSTS SHALL BE INSTALLED SO THAT THE VOID INSIDE THE POST IS COMPLETELY FILLED WITH CONCRETE UP TO THE TOP OF THE FOUNDATION.
4. FOR FENCE GROUNDING DETAIL, SEE SHEET E-401.
5. ALL DIMENSIONS SHOWN IN MILLIMETERS UNLESS OTHERWISE NOTED.

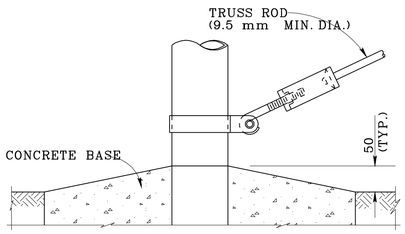

TRUSS ROD AND BAND

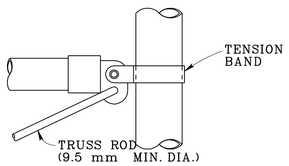

ROUND POST

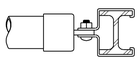

H-BEAM

BRACE RAIL CLAMP DETAILS

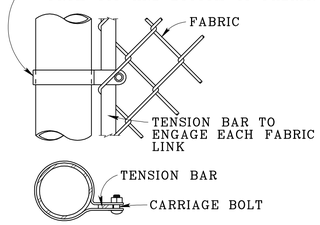

END OR GATE POST DETAIL

TENSION BAND DETAIL

FASTENING DETAILS

NO SCALE

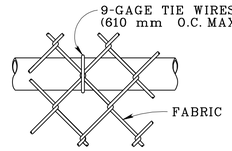

TOP OR BRACE RAIL ATTACHMENT

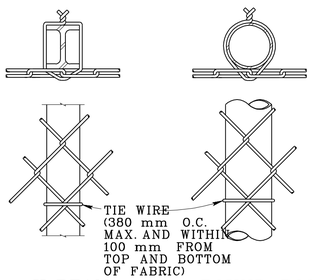

H-BEAM ROUND POST

LINE POST ATTACHMENTS

US Army Corps of Engineers
New York District

Mark	Description	Date	Appr.

Size: A1
Scale: N/A
Date:
Solicitation no.:
Contract no.:
File date: 04-AUG-2005 16:14
Plot date: 04-AUG-2005
Base: S:\DGN\11-00000
Designed by:
Drawn by:
Checked by:
Reviewed by:
Submitted by:
File name: S:\Resources\Military\Ft Drum\Forcemod\Civil\Mitchell.dgn

U.S. ARMY ENGINEER DISTRICT
CORPS OF ENGINEERS
NEW YORK, NEW YORK

FIN 5770B
FORCE MODERNIZATION (TRANSITIONAL FACILITY)
FORT DRUM, NEW YORK

FENCE DETAILS

Sheet reference number:
CS–501

SUBMITTED BY: E3ENDRMF
S:\FILEROOM\MILITARY\FORT DRUM\FORCEMOD\CIVIL\FE6FENCE.DGN
PLOT DATE: 04-AUG-2005 16:14

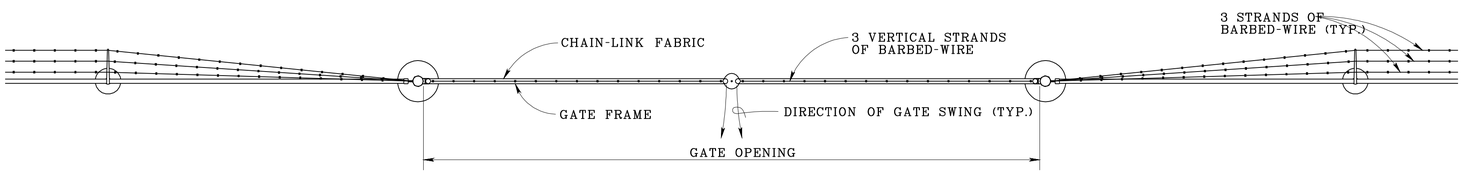

PLAN

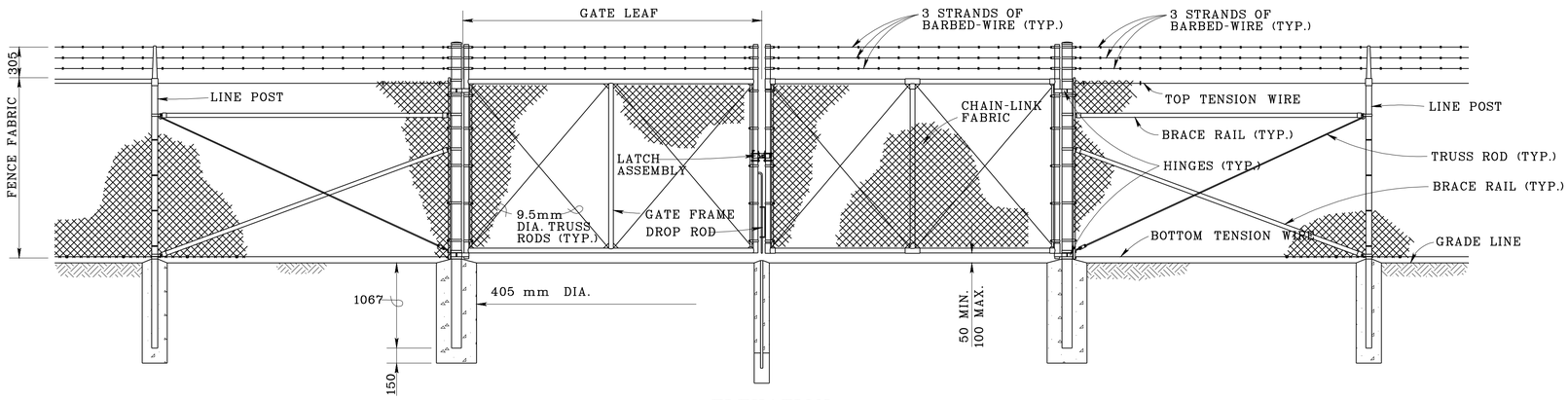

ELEVATION
DOUBLE SWING GATE (TYPE FE-6 FENCE)

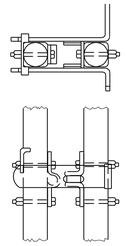

LATCH ASSEMBLY

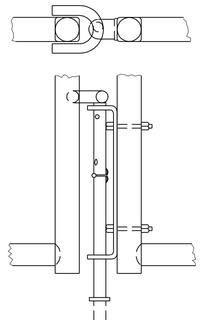

DROP ROD ASSEMBLY

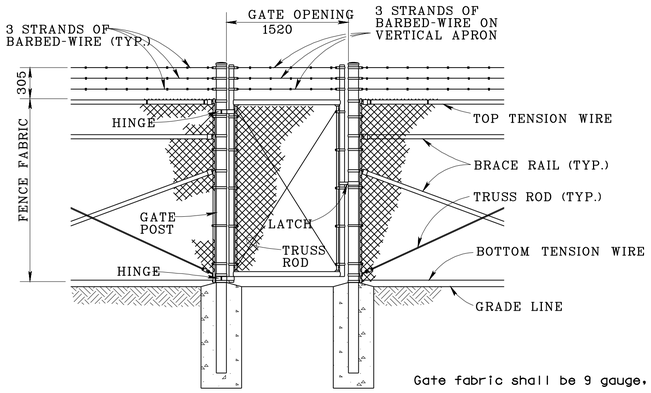

Gate fabric shall be 9 gauge, 50 mm mesh.

PERSONNEL GATE
TYPE FE-6 FENCE

GATE POST SCHEDULE	
GATE LEAF WIDTH (NOMINAL)	OUTSIDE DIMENSION (NOMINAL)
1830 mm OR LESS	100 mm O.D.
MORE THAN 1830 mm TO 3960 mm	101.6 mm O.D.
MORE THAN 3960 mm TO 5480 mm	168.2 mm O.D.
MORE THAN 5480 mm	219.0 mm

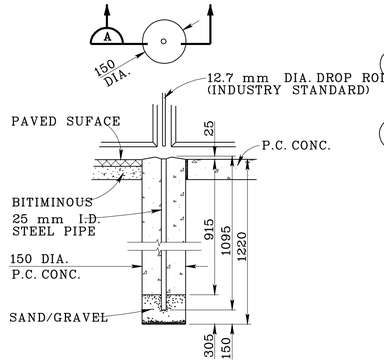

DROP ROD FOUNDATION

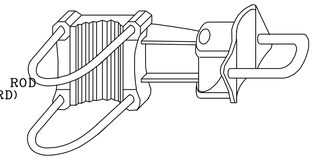

OFFSET HINGE

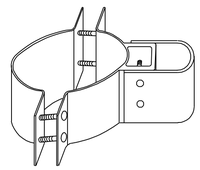

STANDARD HINGE

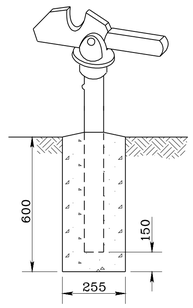

GATE STOP
(TO HOLD GATE OPEN)

NOTES:
1. DETAILS SHOWN ARE TO CLARIFY REQUIREMENTS AND ARE NOT INTENDED TO LIMIT OTHER TYPES OF FENCE SECTIONS AND METHODS OF INSTALLATION.
2. SWING GATES SHALL BE CONSTRUCTED WITH DROP RODS, PADLOCKS, LATCH ASSEMBLY, AND GATE STOPS EXCEPT AS NOTED.
3. ALL GATE FRAMES SHALL BE A MINIMUM 48.2 mm NOMINAL (ROUND) OR 50.8 mm NOMINAL (SQUARE). GATE FRAMES SHALL BE OF WELDED CONSTRUCTION OR SHALL BE ASSEMBLED USING HEAVY FITTINGS. AT THE CONTRACTOR'S OPTION A WELDED HORIZONTAL BRACE MAY BE USED IN LIEU OF TRUSS RODS TO BRACE ALL WELDED GATE FRAMES. THE CONTRACTOR SHALL BE RESPONSIBLE FOR THE PROPER RIGID CONSTRUCTION OFF ALL GATES SUPPLIED.
4. FOR FENCE GROUNDING DETAIL, SEE SHEET E-401.
5. ALL DIMENSIONS SHOWN IN MILLIMETERS UNLESS OTHERWISE NOTED.

US Army Corps of Engineers New York District

Mark	Description	Date	Appr.

U.S. ARMY ENGINEER DISTRICT CORPS OF ENGINEERS NEW YORK, NEW YORK

Designed by: | Date: | Size: A1
Dwn by: | Cntl by: | Submittal no.:
Reviewed by: | Contract no.:
Submitted by: | Plot date: 04-AUG-2005 16:14 | Plot by: E3ENDRMF | Date: 5/26/2005 10:00

File name: S:\Resources\Military\Fort Drum\Force\MOD\Civil\Fegate.dgn

PN 57708
FORCE MODERNIZATION EDUCATION /TRANSITIONAL FACILITY
FORT DRUM, NEW YORK

FENCE DETAILS

Sheet reference number:
CS–502

SUBMITTED BY: E3ENDRMF
S:\FILEROOM\MILITARY\FORT DRUM\FORCEMOD\CIVIL\FEGGATE.DGN
PLOT DATE: 04-AUG-2005 16:14

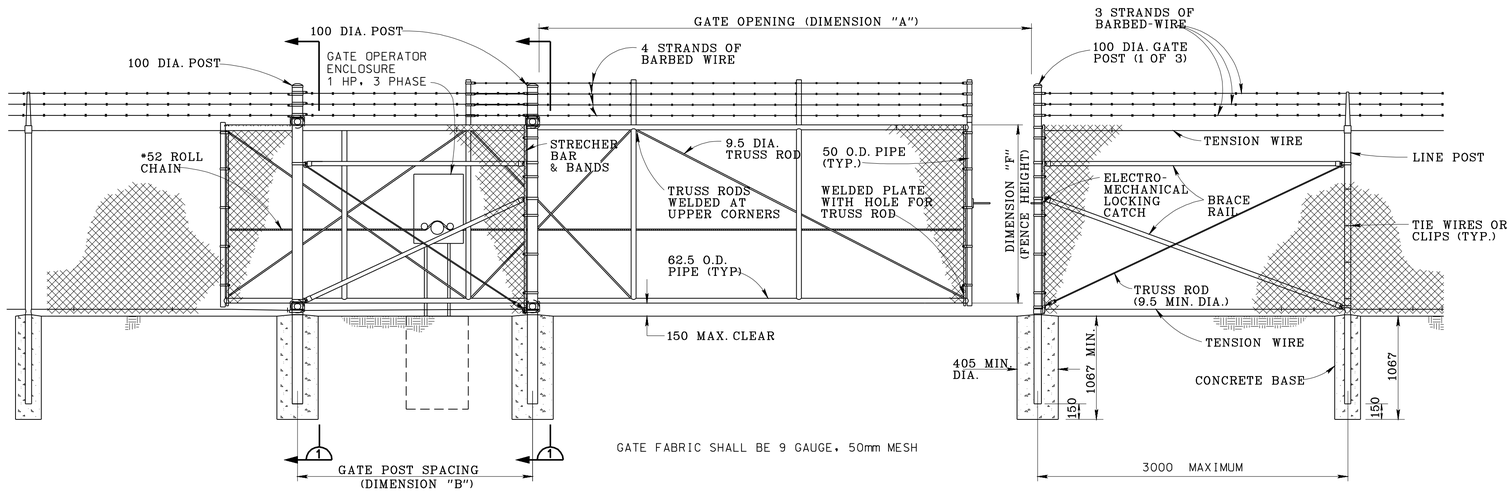

ELEVATION
NO SCALE

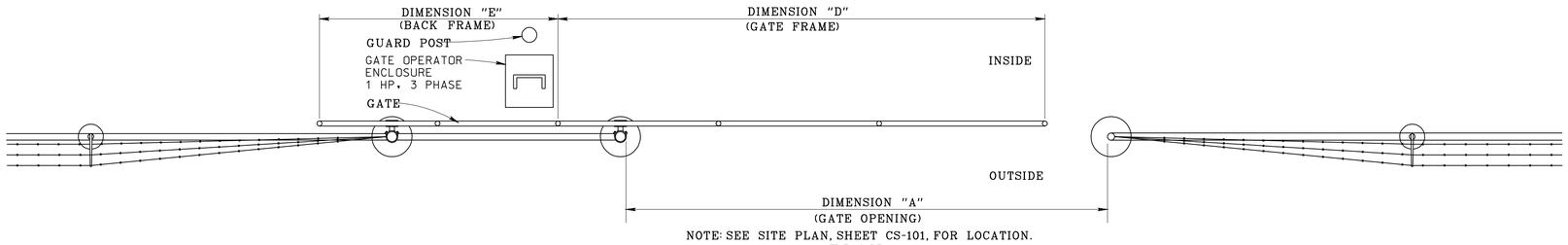

NOTE: SEE SITE PLAN, SHEET CS-101, FOR LOCATION.

PLAN
NO SCALE

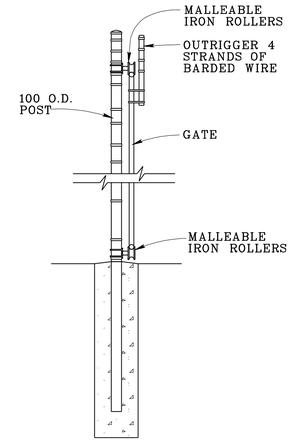

SECTION 1

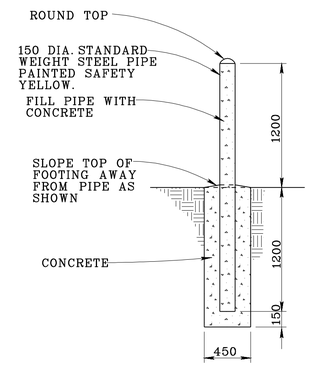

PIPE GUARD DETAIL
NO SCALE

SLIDE GATE SCHEDULE					
DIMENSION "A" (GATE OPENING)	DIMENSION "B" (GATE POST SPACING)	DIMENSION "C" (LINE POST SPACING)	DIMENSION "D" (GATE FRAME)	DIMENSION "E" (BACK FRAME)	DIMENSION "F" (FENCE HEIGHT)
8.0m	3.8m	1.9m	8.1m	4.0m	1.83m

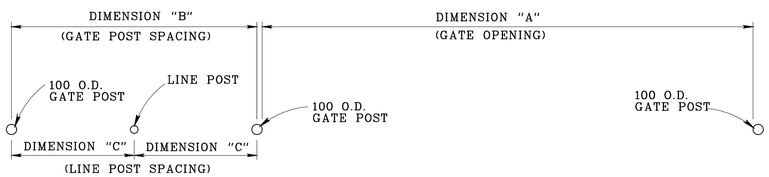

GATE POST SETTINGS
NO SCALE

NOTES:
1. DETAILS SHOWN ARE TO CLARIFY REQUIREMENTS AND ARE NOT INTENDED TO LIMIT OTHER TYPES OF GATE SECTIONS AND METHODS OF INSTALLATION.
2. ALL DIMENSIONS IN MILLIMETERS UNLESS OTHREWISE SHOWN.

US Army Corps of Engineers
New York District

Mark	Description	Date	App'd

Designed by:
Dwn by:
Ckd by:
Reviewed by:
Submitted by:
Date:
Size: A1
Solicitation no.:
Contract no.:
Plot date:
Plot by:
Scale: 1:NoScale/1:NoScale
File name: S:\Resources\Military\Fort Drum\Force Mod\Civil\Gate-Info.dgn

U.S. ARMY ENGINEER DISTRICT
CORPS OF ENGINEERS
NEW YORK, NEW YORK

PN 57708
FORCE MODERNIZATION EDUCATION /TRANSITIONAL FACILITY
FORT DRUM, NEW YORK

FENCE DETAILS

Sheet reference number:
CS-503

SUBMITTED BY: E3ENDRMF
S:\FILEROOM\MILITARY\FORT DRUM\FORCEMOD\CIVIL\SLGATE3METRIC.DGN
PLOT DATE: 04-AUG-2005 16:14

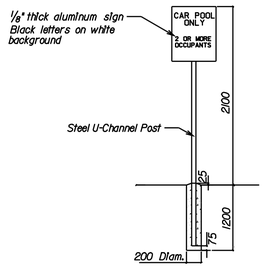

CAR POOL SIGN

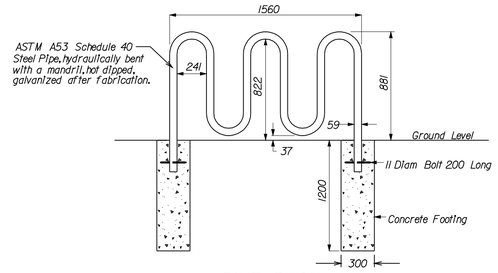

BIKE RACK

NTS

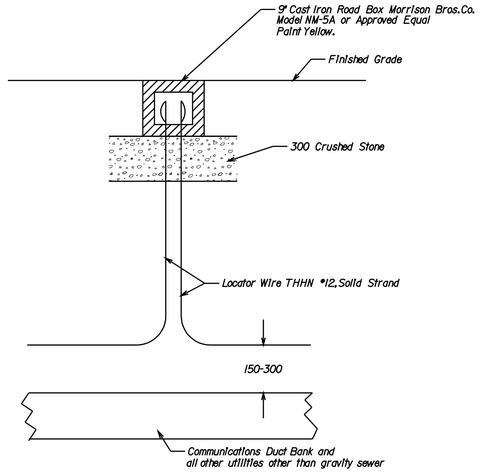

Note:
Locator wire test stations shall be installed at 500' intervals and 1.5' away from each valve box.

TRACER WIRE VAULT DETAIL

NTS

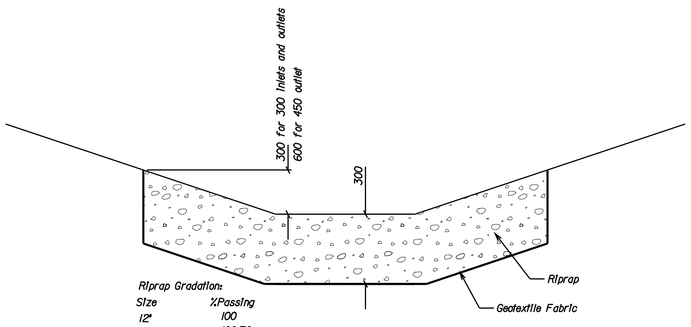

Riprap Gradation:

Size	% Passing
12"	100
9"	100-70
8"	80-50
7"	50-30
5"	15-0

RIPRAP

NTS

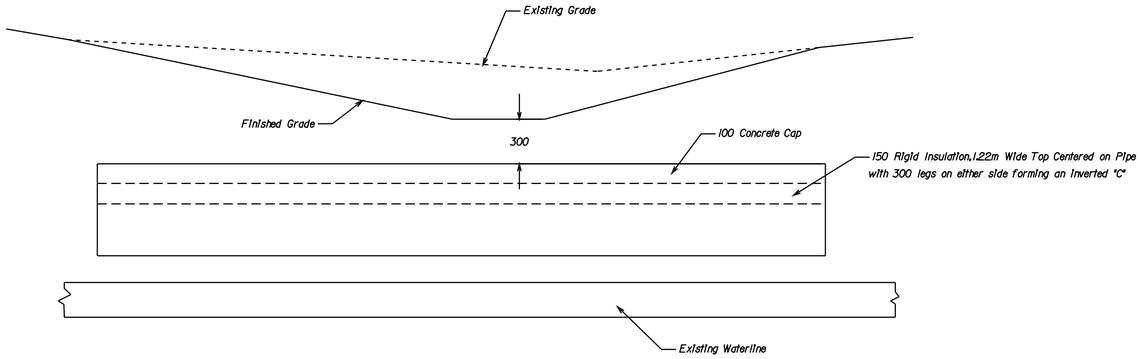

WATERLINE PIPE INSULATION DETAIL

NTS

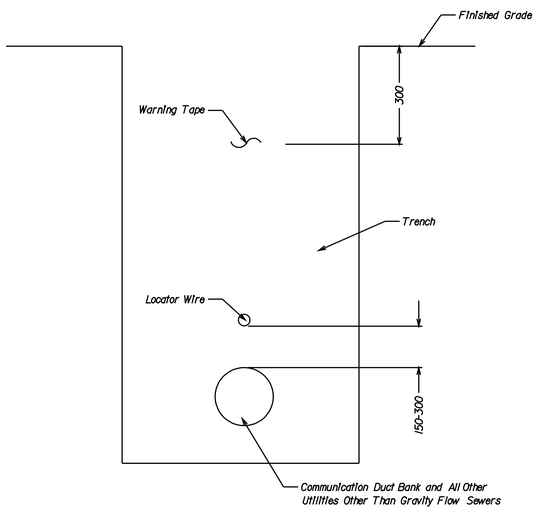

WARNING TAPE AND LOCATOR WIRE LOCATION

NTS

US Army Corps of Engineers
New York District

Mark	Description	Date	Appr.	Mark	Description	Date	Appr.

U.S. ARMY ENGINEER DISTRICT
CORPS OF ENGINEERS
NEW YORK, NEW YORK

Designed by: Date:
Dwn by: Ckd by:
Reviewed by:
Submitted by:
Date Submitted:
Contract no.:
Size: A1
File name: S:\Branch\Military\Fort Drum\Forcemod\Civil\Archived\04-AUG-2005 16:14 S:\FILEROOM\MILITARY\FORT DRUM\FORCEMOD\CIVIL\FORCEMOD_T4.DGN
Plot date: 04-AUG-2005 16:14
Plot by: SYSTEM
Date: (08/08/2001 11:00:00)

PN 57708
FORCE MODERNIZATION EDUCATION /TRANSITIONAL FACILITY
FORT DRUM, NEW YORK

SITE DETAILS

Sheet reference number:
CS-504

SUBMITTED BY: E3ENDRMF
S:\FILEROOM\MILITARY\FORT DRUM\FORCEMOD\CIVIL\FORCEMOD_T4.DGN
PLOT DATE: 04-AUG-2005 16:14

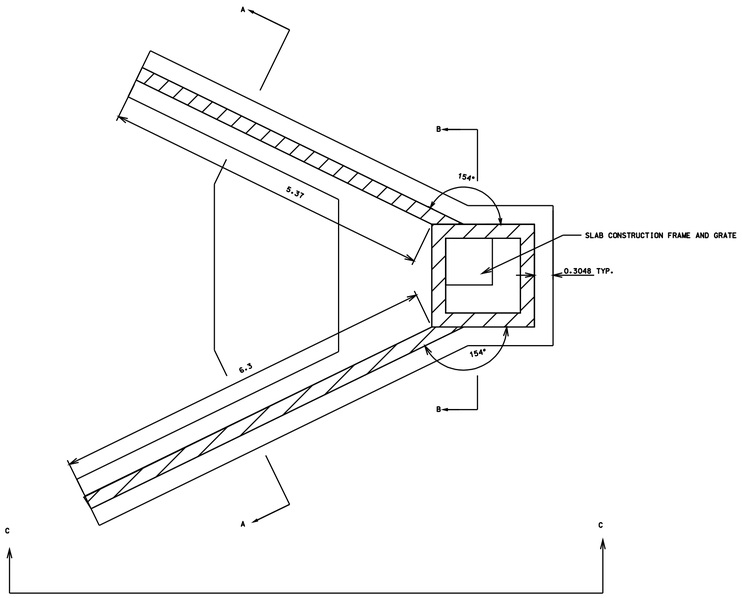

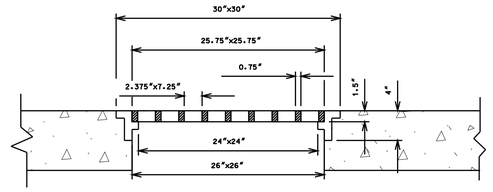

SLAB CONSTRUCTION FRAME AND GRATE

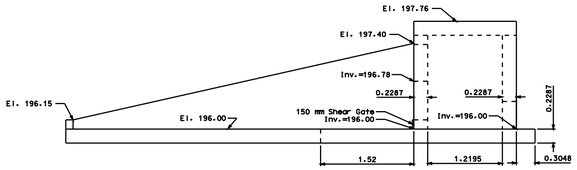

C-C

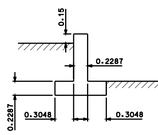

A-A

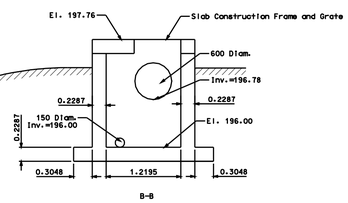

B-B

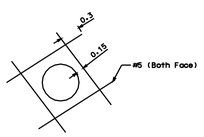

ADDITIONAL REBAR AT OPENING (TYP.)

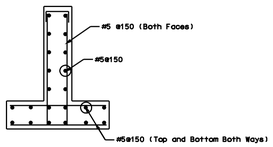

TYPICAL REINFORCEMENT

OUTLET STRUCTURE

NTS

US Army Corps of Engineers
New York District

Mark	Description	Date	Appr.

Mark	Description	Date	Appr.

U.S. ARMY ENGINEER DISTRICT
CORPS OF ENGINEERS
NEW YORK, NEW YORK

Designed by: | Date: | Size: 24x36
Dwn by: | Ckd by: | Solicitation no.:
Reviewed by: | Contract no.:
Submitted by: | Plot date: 04-AUG-2005 16:15 | Plot by: CADD User | Scale: as noted
File name: S:\Marcum\military\Fort Drum\Forcemod\Civil\forcemod_t5.dgn

FORCE MODERNIZATION, EDUCATION /TRANSITIONAL FACILITY
FORT DRUM, NEW YORK

PN 57708

OUTLET STRUCTURE DETAILS

Sheet reference number:

CS–505

PLOT DATE: 04-AUG-2005 16:15
SUBMITTED BY: E3ENDRMF
S:\FILEROOM\MILITARY\FORT DRUM\FORCEMOD\CIVIL\FORCEMOD_T5.DGN

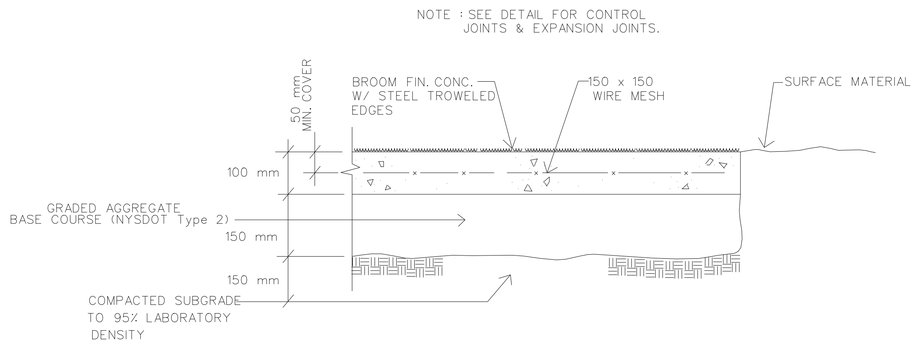

CONC. WALK DETAIL

N.T.S.

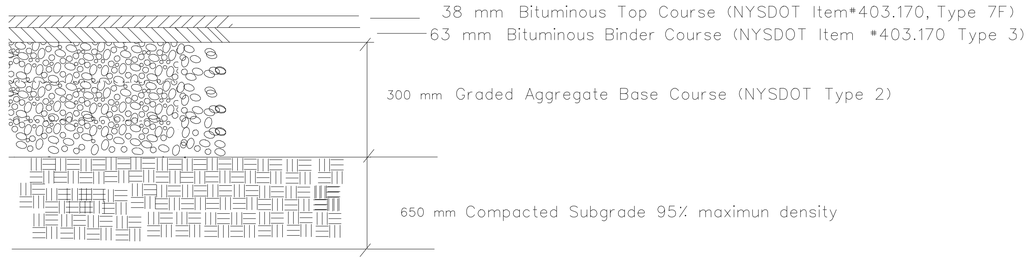

PAVING DETAIL FOR POV PARKING LOT AND ACCESS ROAD

N.T.S.

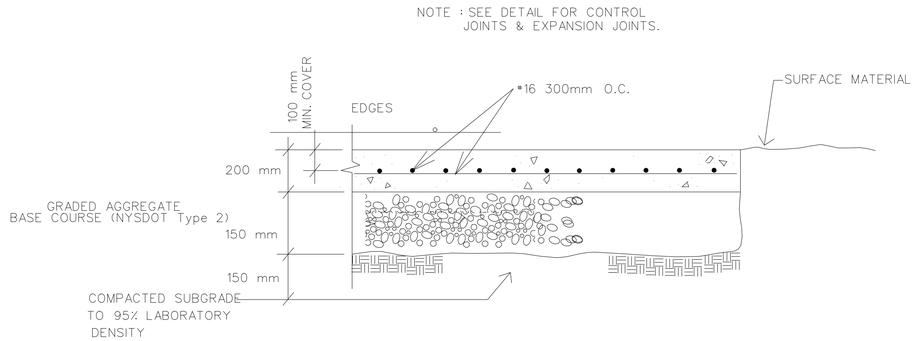

CONC. APRON DETAIL

N.T.S.

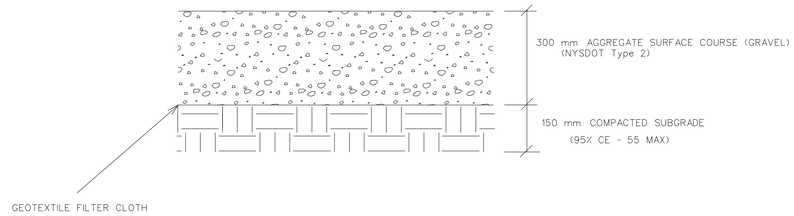

GRAVEL PAVEMENT SECTION

N.T.S.

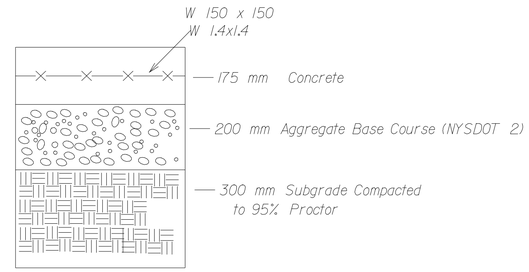

EQUIPMENT AND DUMPSTER PAD

N.T.S.

E.J.-C.J. DETAIL

N.T.S.

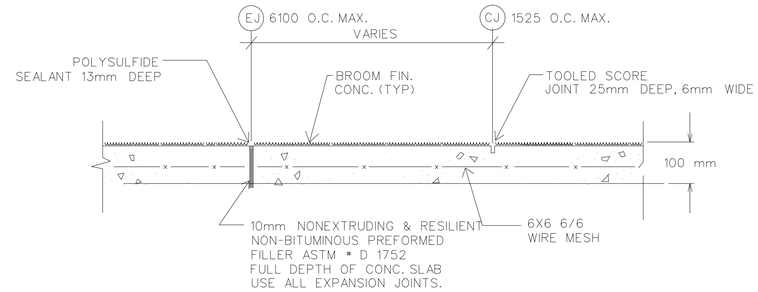

CONC. SIDEWALK

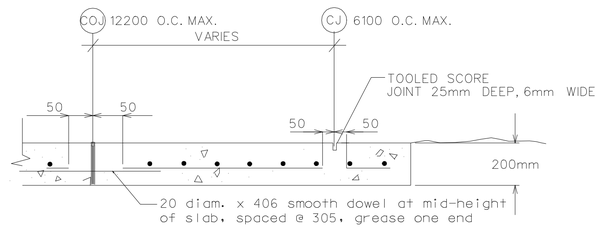

CONC. PAVEMENT

US Army Corps of Engineers
New York District

Mark	Description	Date	Appr.

U.S. ARMY ENGINEER DISTRICT
CORPS OF ENGINEERS
NEW YORK, NEW YORK

Designed by: | Date: | Size: A1
Dwn by: | Ckd by: | Solicitation no.:
Reviewed by: | Contract no.:
Submitted by: | Plot date: 04-AUG-2005 16:15; Plot by: SDRCRAF; File: S:\Sources\military\fort drum\FORCE MOD\CIVIL\FORCEMOD57708_CP_501.dgn

PR. 57708
FORCE MODERNIZATION EDUCATION /TRANSITIONAL FACILITY
FORT DRUM, NEW YORK

SITE DETAILS PAVEMENT SECTIONS

Sheet reference number:
CP-501

PLOT DATE: 04-AUG-2005 16:15
SUBMITTED BY: E3ENDRMF
S:\FILEROOM\MILITARY\FORT DRUM\FORCEMOD\CIVIL\FORCEMOD57708_CP_501.DGN

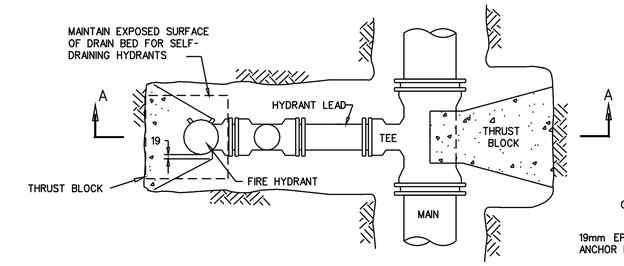

PLAN

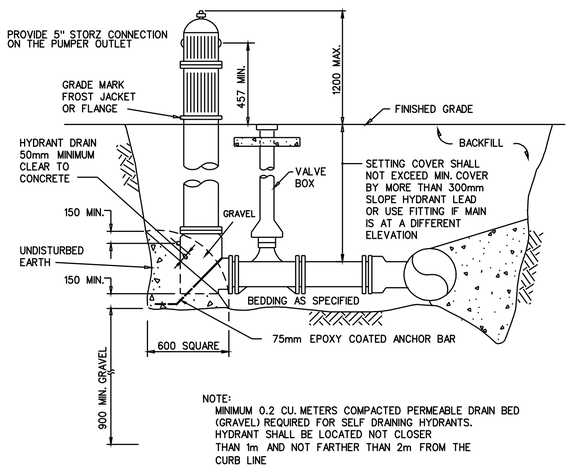

NOTE:
MINIMUM 0.2 CU. METERS COMPACTED PERMEABLE DRAIN BED (GRAVEL) REQUIRED FOR SELF DRAINING HYDRANTS. HYDRANT SHALL BE LOCATED NOT CLOSER THAN 1m AND NOT FARTHER THAN 2m FROM THE CURB LINE

SECTION A-A

FIRE HYDRANT ASSEMBLY
N.T.S.

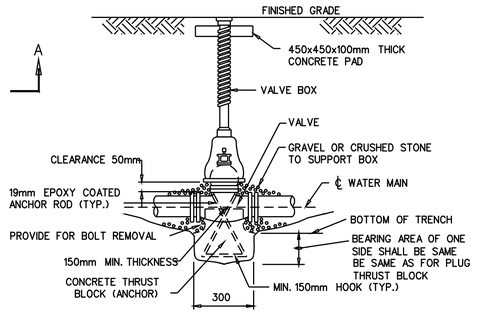

VALVE AND BOX
N.T.S.

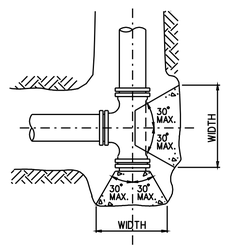

TYPICAL TEE & CAP

NOTE: BEARING AREAS ARE BASED ON 1.38 MPa TEST PRESSURE, A FACTOR OF SAFETY OF 1.5 AND SOIL RESISTANCE OF 96 kPa.. IF WEAK (LESS THAN 96 kPa. RESISTANCE) SOIL POCKETS ARE ENCOUNTERED, THE CONTRACTOR SHALL INCREASE THE BEARING AREAS SHOWN TO PREVENT MOVEMENT UNDER TEST OR OPERATING PRESSURES.

PIPE FITTING	MINIMUM BEARING AREA (SQ. METERS)		
	100mm	150mm	200mm
PLUG	0.175	0.394	0.700
TEE	0.175	0.394	0.700
90° BEND	0.248	0.557	0.990
45° BEND	0.134	0.302	0.569
22½° BEND	0.069	0.153	0.273
11¼° BEND	0.034	0.077	0.137

THRUST BLOCKS SHALL BE CLASS 2500 CONCRETE (MINIMUM)

THRUST BLOCKS
N.T.S.

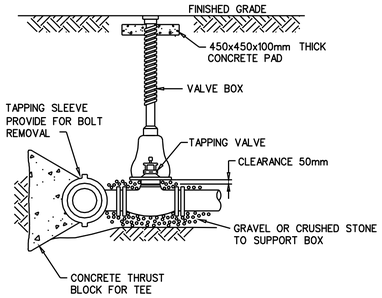

TAPPING VALVE AND BOX
N.T.S.

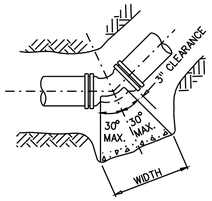

TYPICAL BEND

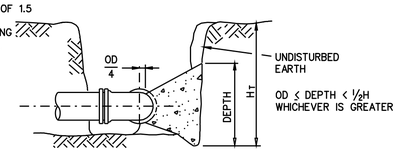

TYPICAL SECTION

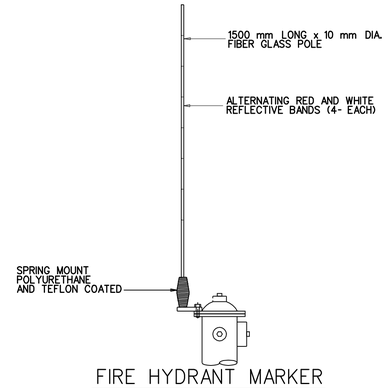

FIRE HYDRANT MARKER
N.T.S.

US Army Corps of Engineers
New York District

Mark	Description	Date	Appr.

U.S. ARMY ENGINEER DISTRICT
CORPS OF ENGINEERS
NEW YORK, NEW YORK

Designed by: Date:
Dwn by: Ckd by: Submittal no.:
Reviewed by: Contract no.:
Submitted by: File name: 04-AUG-2005 16:15 S:\Services\Military\Fort Drum\Forcemod\CIVIL\Forcemod_T1.dgn
File Path: S:\Services\Military\Fort Drum\Forcemod\CIVIL\Forcemod_T1.dgn
Size: A1

PN 57708
FORCE MODERNIZATION EDUCATION /TRANSITIONAL FACILITY
FORT DRUM, NEW YORK

SITE DETAILS

Sheet reference number:
CU-501

SUBMITTED BY: E3ENDRMF
S:\FILEROOM\MILITARY\FORT DRUM\FORCEMOD\CIVIL\FORCEMOD_T1.DGN
PLOT DATE: 04-AUG-2005 16:15

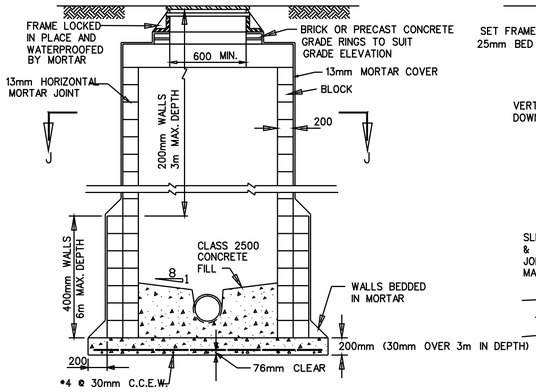

FRONT VIEW

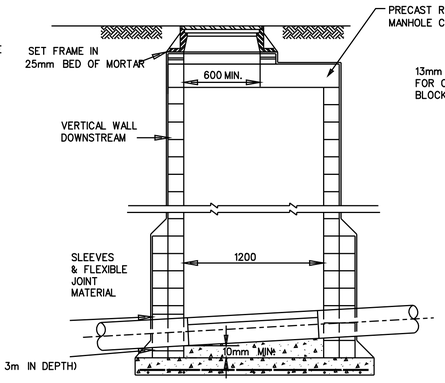

SIDE VIEW

SECTIONAL ELEVATION OF CONCRETE BLOCK MANHOLE

N.T.S.

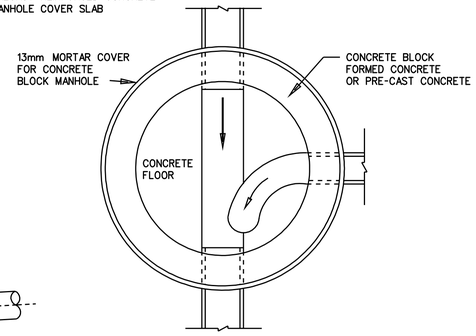

SECTION J-J

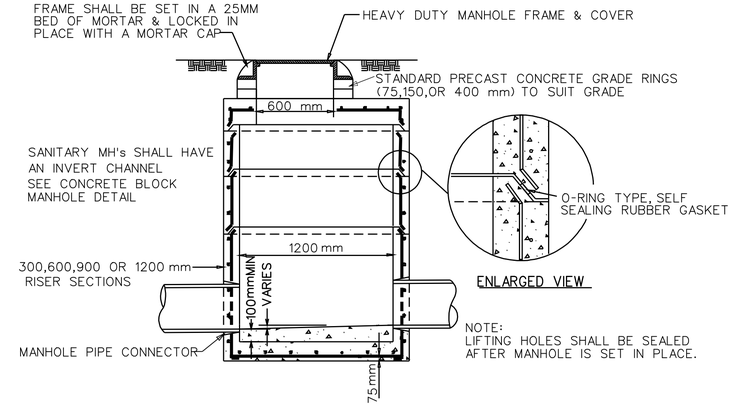

PRE-CAST CONCRETE SANITARY/STORM MANHOLE

NTS

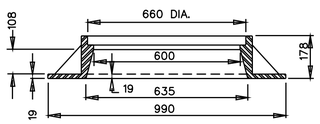

SECTION L-L

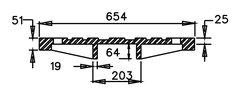

SECTION M-M

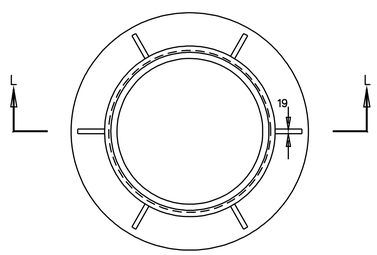

PLAN OF FRAME

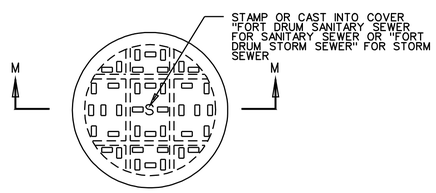

PLAN OF COVER

MANHOLE FRAME AND GRATE

N.T.S.

35 GPM INTERMITENT FLOW
OIL & FLAMABLE FUEL SEPARATOR
WITH INTEGRAL STORAGE
STATIC HOLDING CAPACITY• 64 GALLONS
INTEGRAL STORAGE• 50 GALLONS
TOTAL CAPACITY• 114 GALLONS
INLET• TAPPED 3' N.P.T.
OUTLET• TAPPED 3' N.P.T.
VENTS• TAPPED 3'N.P.T.
MATERIAL• 1/4' A36
SHIP WEIGHT• 825 LBS.
COATING INSIDE•OPEX SHOP COAT COATING
COATING OUTSIDE•BITUMINOUS COATING
HEAVY DUTY COVERS GASKETED AND
BOLTED IN PLACE WITH STAINLESS STEEL BOLTS
BUILT IN FLOW CONTROL
ROCKFORD OST-5628-50E66 OR
APPROVED EQUAL

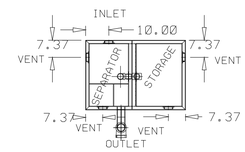

THE OIL WATER SEPARATOR SHALL HAVE THE FOLLOWING FEATURES:
- ☐ INTEGRAL EXTENSION 65.5 INCHES
- ☐ DOUBLE WALL CONSTRUCTION
- ☐ LEAK DETECTION
- ☐ HIGH LEVEL SENSOR & ALARM
- ☐ STORAGE COMPARTMENT LADDER

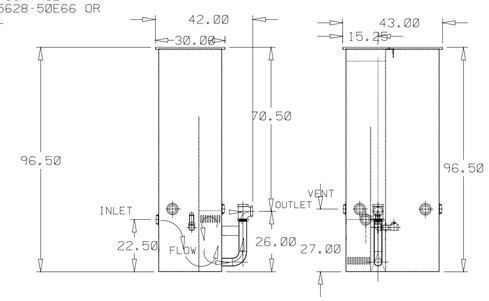

VENT OIL WATER SEPARATOR ALONG WALL OF BUILDING. DO NOT MANIFOLD VENTS TOGETHER UNTIL THEY ARE ABOVE THE ELEVATION OF THE FLOOR DRAIN.

TOTAL/UNCONFINED/UNRESTRICTED/OSHA RECOMMENDED TOP ACCESS TO BE ABLE TO OBSERVE AND CLEAN THE ENTIRE FLUID SURFACE IN ALL CHAMBERS, DOWN TO THE BOTTOM OF THE UNIT.

NOTE: DIMENSIONS ARE IN INCHES

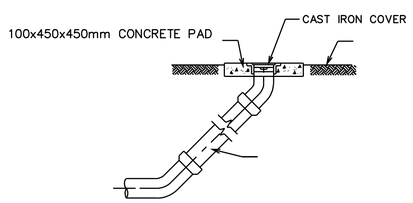

STORM/SANITARY CLEANOUT

N.T.S

OIL WATER SEPARATOR

N.T.S

US Army Corps of Engineers New York District

Mark	Description	Date	App

Mark	Description	Date	App

Designed by: | Date: | Size: A1
Dwn by: | Ckd by: | Solicitation no.:
Reviewed by: | Contract no.:
Submitted by: | File name: 04-AUG-2005 16:16 | File by: EBRONDMF | Date: 1/29/2004

U.S. ARMY ENGINEER DISTRICT
CORPS OF ENGINEERS
NEW YORK, NEW YORK

PN 5708
FORCE MODERNIZATION EDUCATION /TRANSITIONAL FACILITY
FORT DRUM, NEW YORK

SITE DETAILS

Sheet reference number:
CU-502

SUBMITTED BY: E3ENDRMF
S:\FILEROOM\MILITARY\FORT DRUM\FORCEMOD\CIVIL\FORCEMOD_T2.DGN
PLOT DATE: 04-AUG-2005 16:15

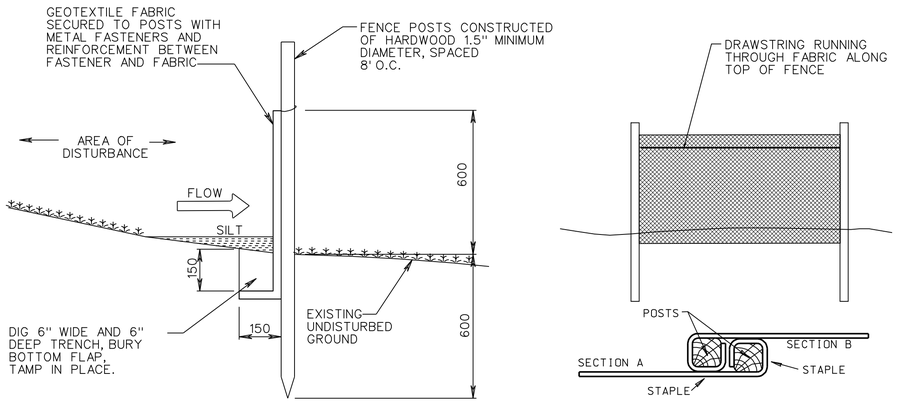

JOINING TWO ADJACENT SILT FENCE SECTIONS

SILT FENCE NOTES:

1. SILT FENCE SHALL BE INSTALLED SO THAT RUNOFF FROM DISTURBED AREAS DO NOT BYPASS THE ENDS OF THE BARRIER.
2. THE GEOTEXTILE FABRIC SHALL BE RECOMMENDED BY THE MANUFACTURER FOR SUCH USE.
3. THE FABRIC SHALL BE SECURELY FASTENED TO THE POSTS USING A SYSTEM OF METAL FASTENERS (NAILS OR STAPLES) AND A HIGH STRENGTH REINFORCEMENT MATERIAL (NYLON WEBBING, GROMMETS, WASHERS ETC.) PLACED BETWEEN THE FASTENER AND THE GEOTEXTILE FABRIC. THE FASTENING SYSTEM SHALL RESIST TEARING AWAY FROM THE POST. THE FABRIC SHALL INCORPORATE A DRAWSTRING IN THE TOP PORTION OF THE FENCE FOR ADDED STRENGTH.
4. REFER TO EROSION CONTROL PLAN FOR LOCATION OF SILT FENCE.

SILT FENCE CONSTRUCTION AND INSTALLATION DETAIL

N.T.S.

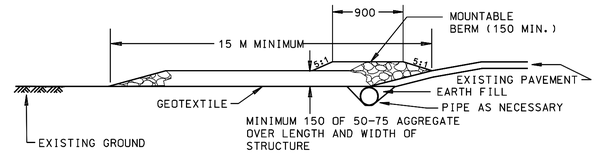

PROFILE

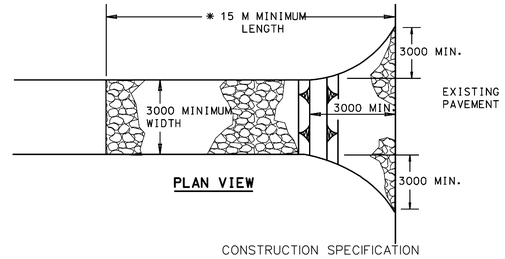

PLAN VIEW

CONSTRUCTION SPECIFICATION

1. LENGTH - MINIMUM OF 15 M.
2. WIDTH - 3000 MINIMUM, SHOULD BE FLARED AT THE EXISTING ROAD TO PROVIDE A TURNING RADIUS.
3. GEOTEXTILE FABRIC (FILTER CLOTH) SHALL BE PLACED OVER THE EXISTING GROUND PRIOR TO PLACING STONE.
4. STONE - CRUSHED AGGREGATE (50 TO 75) OR RECLAIMED OR RECYCLED CONCRETE EQUIVALENT SHALL BE PLACED AT LEAST 150 DEEP OVER THE LENGTH AND WIDTH OF THE ENTRANCE.
5. SURFACE WATER - ALL SURFACE WATER FLOWING TO OR DIVERTED TOWARD CONSTRUCTION ENTRANCES SHALL BE PIPED THROUGH THE ENTRANCE, MAINTAINING POSITIVE DRAINAGE. PIPE INSTALLED THROUGH THE STABILIZED CONSTRUCTION ENTRANCE SHALL BE PROTECTED WITH A MOUNTABLE BERM WITH 5:1 SLOPES AND A MINIMUM OF 150 OF STONE OVER THE PIPE. PIPE HAS TO BE SIZED ACCORDING TO THE DRAINAGE. WHEN THE SCE IS LOCATED AT A HIGH SPOT AND HAS NO DRAINAGE TO CONVEY A PIPE WILL NOT BE NECESSARY. PIPE SHOULD BE SIZED ACCORDING TO THE AMOUNT OF RUNOFF TO BE CONVEYED. A 150 MINIMUM WILL BE REQUIRED.
6. LOCATION - A STABILIZED CONSTRUCTION ENTRANCE SHALL BE LOCATED AT EVERY POINT WHERE CONSTRUCTION TRAFFIC ENTERS OR LEAVES A CONSTRUCTION SITE. VEHICLES LEAVING THE SITE MUST TRAVEL OVER THE ENTIRE LENGTH OF THE STABILIZED CONSTRUCTION ENTRANCE.

STABILIZED CONSTRUCTION ENTRANCE

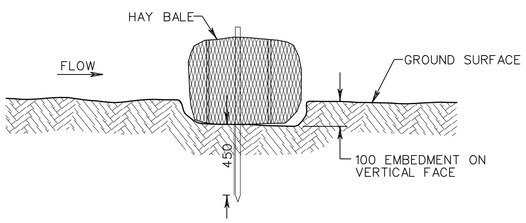

EMBEDDING DETAIL

NOTES:

1. HAY BALES SHALL BE INSTALLED SO WATER CANNOT BYPASS THE ENDS OF THE BARRIER.
2. INSPECTION SHALL BE AT LEAST EVERY 7 CALENDAR DAYS AND WITHIN 24 HOURS OF THE END OF A STORM EVENT OF 0.5 INCHES OR GREATER AND REPAIR OR REPLACEMENT SHALL BE MADE WHEN NEEDED.
3. HAY BALES SHALL BE PLACED IN A ROW WITH ENDS TIGHTLY ABUTTING THE ADJACENT BALES.
4. EACH HAY BALE SHALL BE EMBEDDED IN THE SOIL A MINIMUM OF 100MM.
5. HAY BALES SHALL REMAIN IN PLACE FOR THE DURATION OF THE PROJECT UNLESS OTHERWISE INSTRUCTED BY THE CONTRACTING OFFICER.

HAY BALES SEDIMENT BARRIERS

N.T.S.

US Army Corps of Engineers
New York District

Mark	Description	Date	App

U.S. ARMY ENGINEER DISTRICT
CORPS OF ENGINEERS
NEW YORK, NEW YORK

Designed by:
Dwn by: Ckd by:
Reviewed by:
Submitted by:
Date:
Submission no.:
Contract no.:
File name: 04-AUG-05 16:15
File by: SDEKDAR
Date: 12/08/2004
Size: A1
File name: S:\Branch\Military\Fort Drum\Forcemod\DAT\FORCEMOD_T3.dgn

PN: 87708
FORCE MODERNIZATION EDUCATION /TRANSITIONAL FACILITY
FORT DRUM, NEW YORK

SOIL EROSION AND SEDIMENT CONTROL DETAILS

Sheet reference number:
CE-501

SUBMITTED BY: E3ENDRMF
S:\FILEROOM\MILITARY\FORT DRUM\FORCEMOD\CIVIL\FORCEMOD_T3.DGN
PLOT DATE: 04-AUG-2005 16:15

GENERAL

1. ALL WORK SHALL CONFORM TO APPLICABLE REQUIREMENTS OF US ARMY CORPS OF ENGINEERS REGULATIONS, FT. DRUM DPW REGULATIONS, LOCAL GOVERNING CODES, STATE CONSTRUCTION AND ENERGY CONSERVATION CODES, HEALTH CODES, FIRE DEPARTMENT REGULATIONS, NFPA LIFE SAFETY CODES, NATIONAL BOARD OF FIRE UNDERWRITERS (NBFU) CODES, OSHA REGULATIONS AND OTHER APPLICABLE BUILDING CODES AND REGULATIONS.
2. CONTRACTOR SHALL COORDINATE WORK WITH ALL TRADES AND DISCIPLINES AS REQUIRED.
3. CONTRACTOR SHALL REPORT ANY DISCREPANCIES IN DIMENSIONS BETWEEN STRUCTURAL AND OTHER DISCIPLINE'S DRAWINGS TO THE CONTRACTING OFFICERS REPRESENTATIVE IMMEDIATELY
4. SEE ARCHITECTURAL, MECHANICAL, ELECTRICAL AND DRAWINGS FOR SIZE AND LOCATION OF ALL OPENINGS IN ROOF, FLOORS AND WALLS NOT SHOWN ON STRUCTURAL DRAWINGS.
5. CONTRACTOR SHALL COORDINATE AND VERIFY ALL ARCHITECTURAL, MECHANICAL, ELECTRICAL AND ALL OTHER PLANS, ELEVATIONS, SECTIONS, DETAILS NOT SHOWN ON THE STRUCTURAL DRAWINGS.
6. CONTRACTOR SHALL COORDINATE WITH MATERIAL FABRICATOR(S) REGARDING ALL LOCATIONS AND DIMENSIONS OF ALL OPENINGS IN ROOF, FLOORS, WALLS, ETC. REQUIRED FOR MECHANICAL, ELECTRICAL, AND ALL OTHER EQUIPMENT.
7. ALL DIMENSIONS OF EXISTING CONDITIONS SHOWN ARE APPROXIMATE; CONTRACTOR SHALL MAKE ALL NECESSARY FIELD MEASUREMENTS OF THE SITE, INCLUDING ANY EXISTING STRUCTURES AND EQUIPMENT, TO VERIFY DIMENSIONS SHOWN ON DRAWINGS AND TO PROVIDE DIMENSIONS NOT SHOWN, PRIOR TO FABRICATION. COSTS FOR MODIFICATIONS OF NEW CONSTRUCTION, DUE TO LACK OF CONFIRMATION OF DIMENSIONS BY FIELD MEASUREMENTS SHALL BE BORNE BY THE CONTRACTOR.
8. MINOR DETAILS NOT USUALLY SHOWN OR SPECIFIED, BUT NECESSARY FOR PROPER AND ACCEPTABLE CONSTRUCTION, INSTALLATION OR OPERATION OF ANY PART OF THE WORK, AS DETERMINED BY THE CONTRACTING OFFICER'S REPRESENTATIVE SHALL BE INCLUDED IN THE WORK THE SAME AS IS HEREIN SPECIFIED OR INDICATED.

CODES AND SPECIFICATIONS

1. GENERAL: UNLESS OTHERWISE NOTED, THE MOST CURRENT VERSION OF THE CODE AND/OR SPECIFICATION LISTED BELOW SHALL GOVERN ALL WORK.
2. INTERNATIONAL BUILDING CODE (IBC) 2003.
3. AMERICAN SOCIETY OF CIVIL ENGINEERS (ASCE) STANDARD 7, MINIMUM DESIGN LOADS FOR BUILDINGS AND OTHER STRUCTURES, 2002.
4. ASCE STANDARD 37. DESIGN LOADS ON STRUCTURES DURING CONSTRUCTION, 2002.
5. AMERICAN CONCRETE INSTITUTE (ACI), BUILDING CODE REQUIREMENTS FOR STRUCTURAL CONCRETE AND COMMENTARY, ACI-318 AND ACI 318-R.
6. AMERICAN INSTITUTE OF STEEL CONSTRUCTION. ALLOWABLE STRESS DESIGN (ASD) SPECIFICATION FOR STRUCTURAL STEEL BUILDINGS, 1989.
7. AISC CODE OF STANDARD PRACTICE.
8. METAL BUILDING MANUFACTURERS ASSOCIATION (MBMA) METAL BUILDING SYSTEMS MANUAL, 2002.
9. MBMA METAL ROOFING SYSTEMS DESIGN MANUAL, 2000.
10. AMERICAN IRON AND STEEL INSTITUTE (AISI), COLD-FORMED STEEL DESIGN MANUAL, 2002.
11. AISI NORTH AMERICAN SPECIFICATION FOR THE DESIGN OF COLD-FORMED STEEL STRUCTURAL MEMBERS AND COMMENTARY, 2002.
12. STEEL JOIST INSTITUTE (SJI), STANDARD SPECIFICATIONS, LOAD TABLES AND WEIGHT TABLES FOR STEEL JOISTS AND JOIST GIRDERS. 41ST ED., 2002.
13. STEEL DECK INSTITUTE (SDI), MANUAL OF CONSTRUCTION WITH STEEL DECK.
14. CRANE MANUFACTURERS ASSOCIATION OF AMERICA (CMAA), TOP RUNNING AND BRIDGE AND GANTRY TYPE MULTIPLE GIRDER ELECTRIC OVERHEAD TRAVELING CRANES, NO. 70, 2000.
15. ALUMINUM ASSOCIATION, ALUMINUM DESIGN MANUAL: SPECIFICATIONS AND GUIDELINES FOR ALUMINUM STRUCTURES, 2005.
16. U.S. DEPARTMENT OF DEFENSE, UNIFIED FACILITIES CRITERIA (UFC), UFC 1-200-01, GENERAL BUILDING REQUIREMENTS, 2002.
17. UFC 3-320-05, STRUCTURAL DESIGN CRITERIA FOR STRUCTURES OTHER THAN BUILDINGS, 2005.
18. REFER TO PROJECT SPECIFICATIONS FOR OTHER PERTINENT CODES AND SPECIFICATIONS.

DESIGN CRITERIA

1. WIND:

   BASIC WIND SPEED = 160 km/h

   EXPOSURE C, CATEGORY II, IMPORTANCE FACTOR 1
2. SNOW:

   GROUND SNOW LOAD, pg = 3.4 kPa

   Ce = 0.9, THE ROOF IS NOT A COLD ROOF, IMPORTANCE FACTOR = 1

   PARTIAL LOADING PROVISIONS OF ASCE 7 APPLICABLE

   UNBALANCED LOADING PROVISIONS OF ASCE 7 APPLICABLE
3. SEISMIC:

   SEISMIC DESIGN SHALL CONFORM TO IBC 2003, ASCE 7-02 AND UFC 3-310-03, SEISMIC DESIGN FOR BUILDINGS.

   Ss = 0.35g, S1 = 0.1g, SEISMIC USE GROUP I

   SITE CLASS C, CONTRACTOR SHALL VERIFY, AND ADJUST AS NECESSARY, SITE CLASS BASED ON AVAILABLE SOILS INFORMATION
4. ROOF LOADINGS:

   ROOF LIVE LOAD = 2.4 kPa.

   CONTRACTOR SHALL VERIFY, AND PROVIDE ADEQUATE STRUCTURAL SUPPORT SYSTEM(S) AS NECESSARY, APPLICABILITY OF PONDING, RAIN-ON-SNOW SURCHARGE, AND OTHER ROOF LOADS.

   SEE ARCHITECTURAL DRAWINGS FOR ROOF DRAINAGE REQUIREMENTS.
5. FLOOR LOADINGS:

   SECOND FLOOR DEAD LOAD = 2.6 kPa

   SECOND FLOOR LIVE LOAD = 4.8 kPa

   ATTIC FLOOR DEAD LOAD = 2.2 kPa

   ATTIC FLOOR LIVE LOAD = 4.8 kPa
6. MECHANICAL EQUIPMENT LOADS:

   CONTRACTOR SHALL COORDINATE AND VERIFY ALL LOADING AND SUPPORT REQUIREMENTS OF MECHANICAL EQUIPMENT NOT SHOWN IN THE STRUCTURAL DRAWINGS.

   CONTRACTOR SHALL BE RESPONSIBLE FOR COORDINATING, VERIFYING AND DESIGNING ALL NECESSARY SUPPORTS FOR ALL MECHANICAL EQUIPMENT LOADINGS.

   MECHANICAL EQUIPMENT SHALL BE PLACED ON SKIDS, CURBS OR OTHER SUPPORTING STRUCTURE(S) TO AVOID APPLYING CONCENTRATED LOADS ON BUILDING ELEMENTS.
7. OTHER LOADS:

   CONTRACTOR SHALL DETERMINE ALL OTHER LOADS, AS-NECESSARY, PER ASCE 7, ASCE 32, IBC 2003, UFC 1-200-01 AND UFC 3-320-05. CONTRACTOR SHALL PROVIDE ALL LOAD DETERMINATION COMPUTATIONS AND OTHER INFORMATION TO THE CONTRACTING OFFICER'S REPRESENTATIVE.

CONCRETE GENERAL

1. DO NOT PLACE CONCRETE UNTIL REINFORCING STEEL PLACEMENT HAS BEEN VERIFIED BY THE CONTRACTING OFFICER'S REPRESENTATIVE.
2. CONTRACTOR SHALL BE RESPONSIBLE FOR PREVENTION OF FLOATATION OF STRUCTURES DURING CONSTRUCTION.
3. EXPOSED CONCRETE CORNER CHAMFER = 25 mm UNO.
4. KEYWAY DIMENSIONS: DEPTH = 38 mm, WIDTH = 1/3 THAT OF MEMBER UNO.
5. ALL CONSTRUCTION JOINTS SHALL HAVE KEYWAYS UNO.
6. CONSTRUCTION JOINTS AS SHOWN MAY BE VARIED TO SUIT PLACING SEQUENCE PROVIDED THE RELOCATION, ADDITION, OR DELETION OF CONSTRUCTION JOINTS IS APPROVED BY THE CONTRACTING OFFICER'S REPRESENTATIVE PRIOR TO PREPARATION OF REINFORCING STEEL SHOP DRAWINGS.
7. PROVIDE WATERSTOPS AS SPECIFIED. SECURE WATERSTOPS TO PREVENT DISPLACEMENT OR FOLDING OVER DURING PLACEMENT OF CONCRETE. SECURE BY TYING WITH WIRE TO REINFORCING STEEL OR OTHER APPROVED METHOD.
8. PIPE AND PIPE SLEEVES ARE NOT SHOWN, SEE SPECIFICATIONS. FINAL LOCATION SHALL BE APPROVED BY THE CONTRACTING OFFICER'S REPRESENTATIVE. PROVIDE PIPE SLEEVE FOR ALL PIPES AND CONDUITS THAT PASS THROUGH CONCRETE. SLEEVES SHALL BE FLUSH IN STRUCTURAL ELEMENTS AND EXTEND SLEEVES IN FLOORS 100 mm ABOVE TOP OF FLOOR UNO.
9. PROVIDE SETTING TEMPLATES TO POSITION ANCHOR RODS (WHICH ALSO MAY BE REFERRED TO AS "ANCHOR BOLTS" FOR THIS PROJECT) PRIOR TO PLACING CONCRETE. CONTRACTOR SHALL ACCURATELY POSITION ANCHOR RODS TO ASSURE CORRECT VERTICAL AND HORIZONTAL LOCATION TO MATCH REQUIREMENTS OF THE METAL BUILDING SYSTEM. ANCHOR ROD PLACEMENT AND POSITIONING SHALL BE COORDINATED WITH THE REQUIREMENTS OF THE METAL BUILDING SYSTEM PROVIDED. CONTRACTOR SHALL PROVIDE WRITTEN PROOF OF COORDINATION TO THE CONTRACTING OFFICER'S REPRESENTATIVE PRIOR TO PLACEMENT OF CONCRETE.
10. ALL METAL FABRICATIONS EMBEDDED IN CONCRETE, OTHER THAN REINFORCING STEEL, SHALL BE HOT-DIP GALVANIZED AFTER FABRICATION IN ACCORDANCE WITH ASTM A123 AS APPLICABLE.
11. CONCRETE SHALL NOT BE LOADED UNTIL IT HAS ATTAINED SUFFICIENT STRENGTH TO SAFELY WITHSTAND LOADING AND UNTIL REQUIRED SHORING AND BRACING HAVE BEEN INSTALLED.
12. DO NOT PLACE LOADS WITHIN 1800 mm OF CONSTRUCTION JOINTS IN SLABS FOR AT LEAST 7 DAYS AFTER SLAB IS PLACED.
13. DO NOT PERFORM ANY OPERATIONS NEAR GROUND FLOOR SLAB PLACEMENT WHICH COULD CAUSE VIBRATION OR SETTLEMENT OF THE SUPPORTING SOIL STRATA FOR AT LEASE 7 DAYS AFTER SLAB IS PLACED.
14. CONSTRUCTION CRANES OR OTHER HEAVY ERECTION EQUIPMENT WILL NOT BE PERMITTED ON SLABS.

CONCRETE AND CONCRETE REINFORCEMENT

1. SEE PROJECT SPECIFICATIONS FOR PRODUCT REQUIREMENTS.

   UNLESS OTHERWISE NOTED, MIN f'c AT 28 DAYS = 27.5 MPa.

   MIN f'c AT 28 DAYS FOR ALL GRADE SLABS SHALL = 31.5 MPa.
2. CONCRETE REINFORCEMENT PLACEMENT SHALL CONFORM TO ACI 318, ACI SP-66, AND THE CONCRETE REINFORCING INSTITUTE (CRSI) MANUAL OF STANDARD PRACTICE. WELDED WIRE REINFORCEMENT SHALL CONFORM TO THE REQUIREMENTS OF THE WIRE REINFORCEMENT INSTITUTE (WRI) MANUAL OF STANDARD PRACTICE.
3. REINFORCING SHALL BE CONTINUOUS AROUND ALL CORNERS UNLESS SHOWN OTHERWISE.
4. SHIFT REINFORCING BARS TO CLEAR ANCHOR RODS AND EMBEDDED ITEMS. CUTTING OF REINFORCING BARS NOT PERMITTED.
5. REINFORCING STEEL SHALL BE CONTINUOUS THROUGH CONSTRUCTION JOINTS UNO.
6. TERMINATE ALL REINFORCING STEEL AT EXPANSION JOINTS UNO.
7. OBTAIN CONTRACTING OFFICER'S APPROVAL PRIOR TO WELDING REINFORCING STEEL. WELDING OF REINFORCING STEEL SHALL CONFORM TO AMERICAN WELDING SOCIETY (AWS) STRUCTURAL WELDING CODE - REINFORCING STEEL, AWS D1.4.
8. TACK WELDING TO REINFORCING BARS IS NOT PERMITTED.
9. REINFORCING BAR SPLICES ARE PERMITTED ONLY WHERE SHOWN OR APPROVED BY THE CONTRACTING OFFICER'S REPRESENTATIVE. MINIMUM BAR SPLICE LAP LENGTH SHALL BE AS SHOWN. WHERE LAP LENGTH IS NOT SHOWN ON DRAWINGS, USE MINIMUM LAP LENGTH (IN mm) AS FOLLOWS:

BAR SIZE	#10	#13	#16	#19	#22	#25	#29	#32	#36
TOP BARS	610	813	1016	1219	1778	2032	2286	2591	2870
OTHER BARS	483	635	787	940	1372	1575	1778	1981	2210

   CLASS B SPLICE FOR fy = 414 MPa, f'c = 27.5 MPa, NORMAL WEIGHT CONCRETE, UNCOATED BARS WHERE:

   CLEAR SPACING OF BARS ≥ 2 BAR DIAMETERS AND COVER ≥ BAR DIAMETER, OR

   CLEAR SPACING OF BARS ≥ DIAMETER BAR AND COVER ≥ DIAMETER BAR, AND STIRRUPS OR TIES THROUGHOUT LAP NOT LESS THAN ACI 318 MINIMUM.

   TOP BARS ARE DEFINED AS HORIZONTAL BARS PLACED SO THAT MORE THAN 305 mm OF CONCRETE IS CAST IN THE MEMBER BELOW THE BAR.
10. FOR SLAB REINFORCING BARS, PLACE BARS SPANNING IN THE SHORT DIRECTION WITH MINIMUM CONCRETE COVER SPECIFIED UNO.
11. EXTRA REINFORCING SHALL BE IN ADDITION TO THE REINFORCING SHOWN OR NOTED. OBTAIN APPROVAL OF CONTRACTING OFFICER'S REPRESENTATIVE TO ADD ANY EXTRA REINFORCING.
12. ALL BARS INDICATED AS BEING BENT SHALL HAVE STANDARD 90-DEGREE HOOKS UNO. 180-DEGREE HOOKS ARE AN ACCEPTABLE ALTERNATIVE WHERE APPROVED BY THE CONTRACTING OFFICER'S REPRESENTATIVE.
13. PROVIDE REINFORCING BAR DOWELS IN FOOTINGS OF THE SAME NUMBER, SPACING AND SIZE AS COLUMN, PIER OR WALL REINFORCING UNO.
14. ALL REINFORCING BARS SHALL BE SECURELY PLACED IN THEIR RESPECTIVE FINAL POSITION PRIOR TO PLACING CONCRETE. PLACING REINFORCING BARS INTO WET CONCRETE IS PROHIBITED.
15. MINIMUM REINFORCING CONCRETE COVER UNLESS OTHERWISE SHOWN SHALL BE 50 mm FOR #19 BARS AND LARGER FOR CONCRETE EXPOSED TO EARTH OR WEATHER, 75 mm WHEN DEPOSITED AGAINST EARTH, 19 mm FOR WALLS AND SLABS NOT EXPOSED TO EARTH OR WEATHER. MINIMUM REINFORCING CONCRETE COVER OTHERWISE SHALL BE 38 mm UNO.
16. UNO TOLERANCE FOR CONCRETE REINFORCEMENT PLACEMENT SHALL CONFORM TO ACI 318 AND ACI 117, STANDARD SPECIFICATIONS FOR TOLERANCES FOR CONCRETE CONSTRUCTION AND MATERIALS. CONCRETE REINFORCEMENT SHALL BE PLACED WITHIN THE FOLLOWING TOLERANCE RELATIVE TO FORMED OR UNFORMED CONCRETE SURFACE:

SPECIFIED COVER	TOLERANCE	
	D ≤ 200 mm	D > 200 mm
19 mm	-0, + 6 mm	-0, + 10 mm
38 mm OR GREATER	±10 mm	±13 mm

FOUNDATIONS

1. REQUIRED ALLOWABLE BEARING CAPACITY = 287 kPa.
2. FROST DEPTH PENETRATION = 1680 mm
3. FOOTING EXCAVATIONS SHALL BE INSPECTED BY THE CONTRACTING OFFICER'S REPRESENTATIVE PRIOR TO CONCRETE PLACEMENT.
4. ALL WALL FOOTINGS SHALL BE A MINIMUM OF 305 mm THICK AND PROJECT 150 mm MIN BEYOND ALL FACES OF FOUNDATION WALLS.
5. ALL FOOTINGS SHALL BE PLACED ON UNDISTURBED SOIL OR COMPACTED FILL CONFORMING TO THE PROJECT SPECIFICATIONS. THE CONTRACTOR SHALL RETAIN THE SERVICES OF A REGISTERED PROFESSIONAL ENGINEER SPECIALIZING IN GEOTECHNICAL ENGINEERING ("THE CONTRACTOR'S GEOTECHNICAL ENGINEER")TO VERIFY THE REQUIRED SOIL BEARING PRESSURE PRIOR TO PLACEMENT OF CONCRETE. SOILS NOT MEETING THE REQUIRED BEARING PRESSURE SHALL BE MODIFIED AS RECOMMENDED BY THE CONTRACTOR'S GEOTECHNICAL ENGINEER TO MEET THE REQUIRED PROJECT SPECIFICATIONS.

STRUCTURAL STEEL AND OTHER STEEL ITEMS

1. SEE PROJECT SPECIFICATIONS FOR PRODUCT REQUIREMENTS.
2. BEAM SHEAR CONNECTIONS SHALL BE PROVIDED TO SUPPORT A REACTION EQUAL TO ONE HALF THE TOTAL UNIFORM LOAD CAPACITY OF THE BEAM. AS SHOWN IN THE TABLE OF UNIFORM LOAD CONSTANTS OF THE AISC ASD MANUAL OF STEEL CONSTRUCTION, NINTH EDITION, FOR THE SIZE AND SPAN SHOWN. VERIFY AND DESIGN FOR LOAD REQUIREMENTS FOR UNSYMETRICALLY LOADED BEAMS, AS FOR EXAMPLE AT EQUIPMENT, PARTITION AND BEAM POINT LOADS.
3. MOMENT CONNECTIONS SHALL BE DESIGNED TO DEVELOP THE FULL ELASTIC MOMENT CAPACITY OF THE BEAM.
4. COLD-FORMED STEEL PURLINS AND GIRTS SHALL BE Z-SHAPED, GALVANIZED, Fy = 345 MPa.
5. PROVIDE TIE/SAG RODS AS REQUIRED.
6. UNLESS OTHERWISE NOTED, STRUCTURAL STEEL CONNECTIONS SHALL BE SHOP WELDED AND FIELD BOLTED. BOLTS SHALL BE 19 mm DIAMETER MINIMUM.
7. ALL CONNECTIONS NOT DETAILED SHALL BE DESIGNED BY THE FABRICATOR USING 1/2 THE ALLOWABLE BEAM LOAD PER AISC ASD MANUAL OF STEEL CONSTRUCTION UNO. USE STANDARD DOUBLE CLIP ANGLE CONNECTIONS AT ALL GIRDERS. USE DOUBLE CLIP ANGLES OR SHEAR PLATE CONNECTIONS AT BEAMS UNO.
8. ALL STRUCTURAL STEEL SHALL BE SHOP CLEANED PER THE SOCIETY FOR PROTECTIVE COATINGS (SSPC) SSPC SP6.
9. ALL EXPOSED EXTERIOR STRUCTURAL STEEL SHALL BE SHOP CLEANED, PRIME COATED AND COATED WITH A FINISH PAINS SYSTEM AS INDICATED IN THE PROJECT SPECIFICATIONS.
10. ALL NON-EXPOSED STEEL SHALL BE SHOP CLEANED AND PRIME COATED PER PROJECT SPECIFICATIONS.
11. OTHER STEEL ITEMS SUCH AS STAIRS SHALL BE IN CONFORMANCE WITH THE AISC CODE OF STANDARD PRACTICE.

LIGHT-GAUGE STEEL

1. SEE PROJECT SPECIFICATIONS FOR PRODUCT REQUIREMENTS.
2. LOAD-BEARING LIGHT-GAUGE STEEL MEMBERS SHALL COMPLY WITH UFC 3-310-04A, DESIGN OF COLD-FORMED LOAD BEARING STEEL SYSTEMS.
3. NON-LOAD BEARING LIGHT-GAUGE STEEL FRAMING SHALL BE DESIGNED IN CONFORMANCE WITH THE STEEL FRAMING ALLIANCE'S PRESCRIPTIVE METHOD FOR RESIDENTIAL COLD-FORMED STEEL FRAMING, STEEL WALL GUIDE, BUILDER'S STEEL STUD GUIDE, AND LIGHT GAUGE STEEL ENGINEERS ASSOCIATION (LGSEA) TECHNICAL NOTE 542 INTRODUCTION TO CURTAIN WALL DESIGN USING COLD-FORMED STEEL.

STEEL DECK

1. SECOND STORY AND ATTIC FLOORING SHALL BE COMPRISED OF LIGHTWEIGHT CONCRETE ON REINFORCED STEEL DECKING AS SHOWN IN THE DRAWINGS. STEEL DECK SHALL BE DESIGNED AND DETAILED IN ACCORDANCE WITH THE PROVISIONS OF THE STEEL DECK INSTITUTE AS DESCRIBED IN THE PROJECT SPECIFICATIONS.
2. STEEL DECK SUPPLIER SHALL PROVIDE LIGHT GAUGE METAL DECK CLOSURE PIECES AND SHALL REINFORCE OR SUPPORT DECK AT OPENINGS, COLUMN AREAS, CONNECTIONS TO STAIR ASSEMBLIES AS REQUIRED, IN ACCORDANCE WITH THE PROVISIONS OF THE STEEL DECK INSTITUTE AS DESCRIBED IN THE PROJECT SPECIFICATIONS.
3. STEEL FLOOR DECK MATERIAL SHALL BE 0.75 mm THICK (GALVANIZED) AND STEEL DECK SHALL BE DESIGNED TO SUPPORT A 102 mm THICK SLAB REINFORCED WITH WELDED WIRE REINFORCEMENT. STEEL DECK WILL HAVE DEFORMATIONS TO PROVIDE MECHANICAL BOND WITH CONCRETE.
4. LIGHTWEIGHT CONCRETE TO BE PLACED ON FLOOR DECKING SHALL HAVE MINIMUM 28-DAY f'c = 20 MPa. LIGHTWEIGHT CONCRETE REINFORCEMENT SHALL BE 152X152-MW19 X MW19 AND SHALL CONFORM TO THE PROVISIONS OF THE WIRE REINFORCEMENT INSTITUTE.
5. WELDING OF STEEL DECK SHALL CONFORM TO AWS D1.3.

STEEL JOISTS

1. CONTRACTOR SHALL PROVIDE SUPPORTS FOR STEEL FLOOR DECKING USING OPEN WEB STEEL JOISTS AND GIRDERS, K-SERIES, BRIDGING, AND ACCESSORIES THAT MEET THE STEEL JOIST INSTITUTE STANDARD SPECIFICATIONS, LOAD TABLES AND WEIGHT TABLES FOR STEEL JOISTS AND JOIST GIRDERS
2. CONTRACTOR SHALL COORDINATE WITH MANUFACTURER AND SHALL VERIFY THAT JOIST SIZES SHOWN ARE ADEQUATE TO SUPPORT ALL DEAD LOADS AND LIVE LOADS AT THE SLOPE AND SPANS AS INDICATED ON THE PLAN AND IN THE GENERAL NOTES. JOIST CHORDS AND WEB MEMBERS SHALL BE INCREASED IN SIZE AS REQUIRED.
3. CONTRACTOR SHALL COORDINATE WITH MANUFACTURER AND SHALL VERIFY JOIST SIZES SHOWN ARE ADEQUATE TO SUPPORT MECHANICAL EQUIPMENT AND DUCTWORK AS INDICATED ON MECHANICAL, ELECTRICAL, ARCHITECTURAL AND OTHER DRAWINGS. VERIFY LOADING OF EQUIPMENT TO BE INSTALLED AT THEIR APPROPRIATE LOCATION.
4. PROVIDE BRIDGING AND LATERAL BRACING AS REQUIRED.

WELDING

1. STEEL:

   WELDING OF STRUCTURAL STEEL AND OTHER STEEL ITEMS SHALL BE IN ACCORDANCE WITH AWS D1.1 STRUCTURAL WELDING CODE - STEEL.

   ALL GROOVE WELDS SHALL BE FULL PENETRATION.

   WHERE FILLET WELD SIZE IS NOT SHOWN, MINIMUM SIZE SHALL BE 5 mm.

   ALL WELDS SHALL BE SHOP WELDS (TYPICAL UNLESS OTHERWISE SHOWN OR APPROVED).
2. ALUMINUM:

   WELDING OF ALUMINUM SHALL BE IN ACCORDANCE WITH AWS D1.2 STRUCTURAL WELDING CODE - ALUMINUM.
3. SHEET STEEL:

   WELDING OF SHEET STEEL (AND THICKNESS-LIMITED LIGHT GAUGE STEEL MEMBERS - SEE PROJECT SPECIFICATIONS - AS APPROPRIATE) SHALL BE IN ACCORDANCE WITH AWS D1.3 STRUCTURAL WELDING CODE - SHEET STEEL.

METAL BUILDING SYSTEMS

1. PROVIDE SINGLE-SPAN RIGID FRAMES WITH PINNED COLUMN ENDS, TRANSFERRING NO MOMENTS TO FOUNDATIONS.
2. PROVIDE MULTI-STORY RIGID FRAMES, WITH PINNED COLUMN ENDS AS ABOVE, FOR ADMINISTRATIVE CORE OF BUILDING AS SHOWN ON THE DRAWINGS.
3. DESIGN THE FRAMING FOR ALL EFFECTS OF WIND, SNOW, SEISMIC, LIVE AND DEAD LOADS INCLUDING CATENARY FORCES PER LOADING COMBINATION REQUIREMENTS OF ASCE 7. THE DESIGN SHALL INCLUDE A COLLATERAL LOAD OF 246 Pa APPLIED TO THE ROOF.
4. PRIMARY FRAMING SHALL BE APPROPRIATELY BRACED AGAINST LATERAL LOADS, LATERAL TORSIONAL BUCKLING, ROOF DIAPHRAGM LOADS, ETC. SECONDARY FRAMING MEMBERS SHALL BE APPROPRIATELY BRACED AGAINST LATERAL TORSIONAL BUCKLING, PURLIN ROLL, GIRT SAGGING, ETC. OVERHEAD COILING DOOR OPENINGS SHALL BE FRAMED WITH HOLLOW STRUCTURAL SECTIONS (HSS). COLD-FORMED CHANNEL JAMS ARE NOT PERMITTED.
5. PROVIDE CHANNEL-TYPE PURLIN BRACING AT INTERVALS NOT EXCEEDING 1/4 SPAN. PROVIDE ANTIROLL CLIPS AT ALL PURLIN BEARING POINTS.
6. LIMIT LATERAL BARE-FRAME DRIFT UNDER ANY DESIGN LOAD COMBINATION TO H/400 FOR SECTIONS WITH INTERIOR PARTITIONS OR FINISHED ATTACHED TO FRAME (H/200 FOR OTHER CASES).
7. LIMIT THE MAXIMUM COMBINED VERTICAL DEFLECTION OF PURLINS AND FRAMES TO L/240 UNDER DESIGN SNOW OR ROOF LIVE LOAD.
8. LIMIT THE MAXIMUM HORIZONTAL DEFLECTION OF GIRTS SUPPORTING STEEL STUDS WITH DRYWALL FINISH TO L/240 UNDER DESIGN WIND LOADING.
9. PERMANENT BUILDING BRACING MAY BE INSUFFICIENT DURING ERECTION. DESIGN AND PROVIDE TEMPORARY LATERAL BRACING DURING CONSTRUCTION UNTIL PERMANENT BRACING IS IN PLACE.
10. CONTRACTOR SHALL COORDINATE WITH THE CONTRACTING OFFICER'S REPRESENTATIVE FOR DESIGN OF THE FOUNDATIONS TO FIT THE PROVIDED METAL BUILDING SYSTEM.
11. COLUMN AND BASE PLATE SIZES SHALL ALLOW FOR A MINIMUM ANCHOR ROD EDGE DISTANCE OF 178 mm TO ANY VERTICAL EDGE OF CONCRETE. BASE PLATE SIZES SHALL BE DESIGNED TO FIT ON THE FOUNDATION PIERS DESIGNED BY THE CONTRACTING OFFICER'S REPRESENTATIVE.
12. PROVIDE BOTTOM-FLANGE ANGLE BRACING. PROVIDE BACKUP PLATES (MIN 150 mm WIDE X 19 mm THICK) BEHIND ALL BRACE ROD CONNECTIONS TO FRAME WEBS. WELD PLATES TO FRAME FLANGES.
13. CABLES SHALL NOT BE PERMITTED TO BE USED AS WALL AND ROOF BRACING. CONTRACTOR SHALL DESIGN BACKUP PLATES WITH WELDED CONNECTIONS BEHIND ALL BRACE ROD CONNECTIONS TO FRAME WEBS.
14. STRUCTURAL SUPPORTS SHALL NOT INTERFERE, ENTER OR DISRUPT THE FUNCTIONAL AREAS OF THE BUILDINGS; PRIMARY AND SECONDARY FRAMING, CROSS BRACING (AS REQUIRED), AND OTHER STRUCTURAL SUPPORTING ELEMENTS SHALL NOT INTERFERE WITH EQUIPMENT PLACEMENT, DUCTWORK, WINDOW LOCATIONS, DOOR WAYS AND INTERIOR SPACES; ALL FRAMING SHALL BE COORDINATED WITH ARCHITECTURAL REQUIREMENTS.

US Army Corps of Engineers
New York District

U.S. ARMY ENGINEER DISTRICT
CORPS OF ENGINEERS
NEW YORK, NEW YORK

PN: 57708
FORCE MODERNIZATION EDUCATION /TRANSITIONAL FACILITY
FORT DRUM, NEW YORK

STRUCTURAL NOTES

Sheet reference number:
S-001

PLOT DATE: 09-AUG-2005 14:53
SUBMITTED BY: E3ENDSVC
S:\FILEROOM\MILITARY\FORT DRUM\FORCEMOD\STRUCTURAL\SHEET FILES\FORCEMOD57708_S-001DNR.DGN

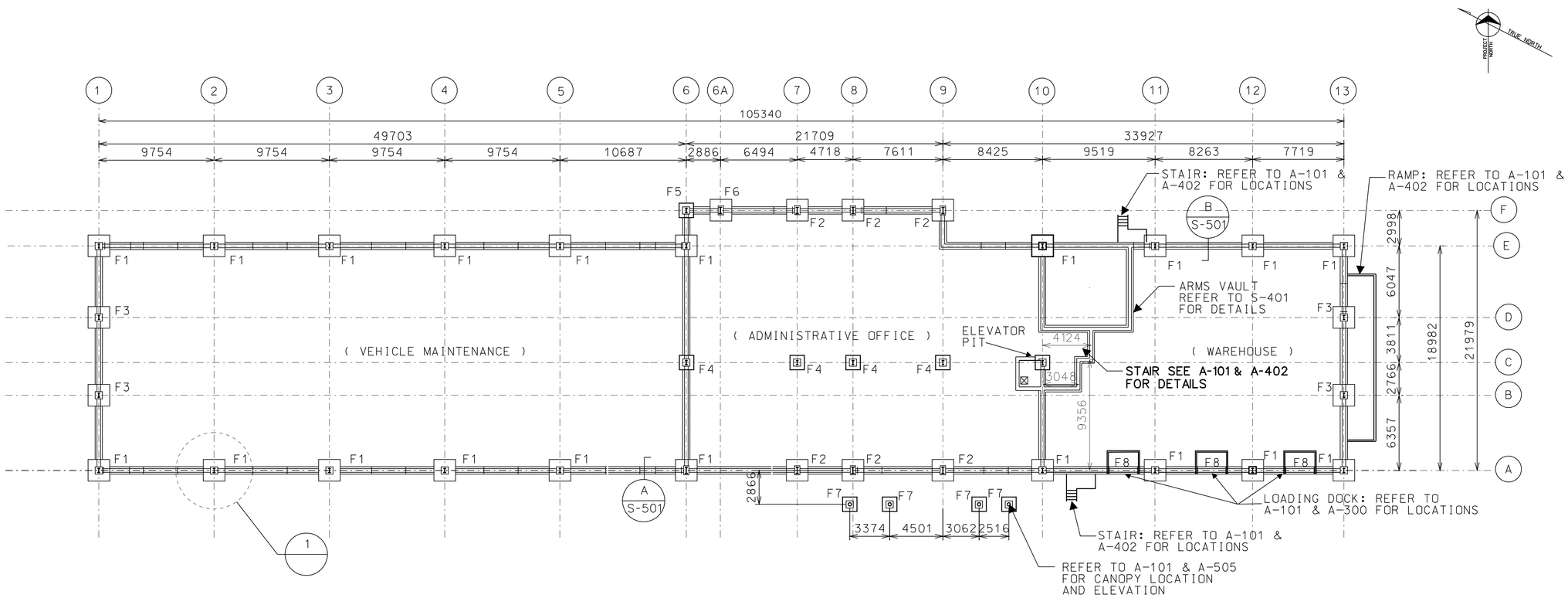

FOUNDATION PLAN

4000 2000 0 4000 8000

SCALE: 1 : 200

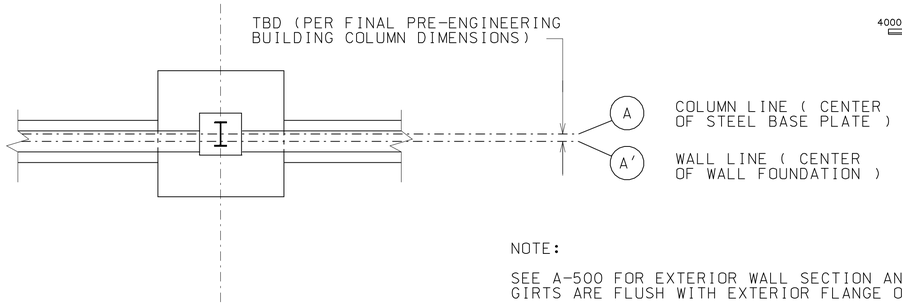

NOTE:

SEE A-500 FOR EXTERIOR WALL SECTION AND DETAILS.METAL GIRTS ARE FLUSH WITH EXTERIOR FLANGE OF STEEL COLUMN

1 FOUNDATION PLAN DETAIL -TYPICAL

NTS

NOTES:

1. SEE S-001 FOR GENERAL STRUCTURAL NOTES, DESIGN CRITERIA AND CONSTRUCTION REQUIREMENTS.
2. SEE S-501 & S-502 FOR FOUNDATION SECTIONS & DETAILS.
3. TOP OF WALL FOUNDATION SHALL BE FLUSH WITH FIRST FLOOR SLAB AT EACH ENTRANCE. SEE A-100 AND A-101 FOR ALL ENTRANCE LOCATIONS AND DIMENSIONS.
4. SEE CIVIL DRAWINGS FOR SITE PLAN, PAVEMENT LAYOUT, SUB-BASE PREPARATION AND REQUIREMENTS
5. SEE S-502 FOR RAMP, STAIR, LOADING DOCK SECTIONS AND DETAILS.
6. SEE S-401 FOR ARMS VAULT PLAN DETAILS.

US Army Corps of Engineers
New York District

U.S. ARMY ENGINEER DISTRICT
CORPS OF ENGINEERS
NEW YORK, NEW YORK

DES. BR. CIVIL ENG. DES. SEC.
STRUCTURAL TEAM
CENAN-EN-DC-S

PN 57708
FORCE MODERNIZATION EDUCATION /TRANSITIONAL FACILITY
FORT DRUM, NEW YORK

FOUNDATION PLAN

Sheet reference number:
S-101

SUBMITTED BY: E3ENDSVC PLOT DATE: 09-AUG-2005 14:53
S:\FILEROOM\MILITARY\FORT DRUM\FORCEMOD\STRUCTURAL\SHEET FILES\FORCEMOD57708_S-SB001.DGN

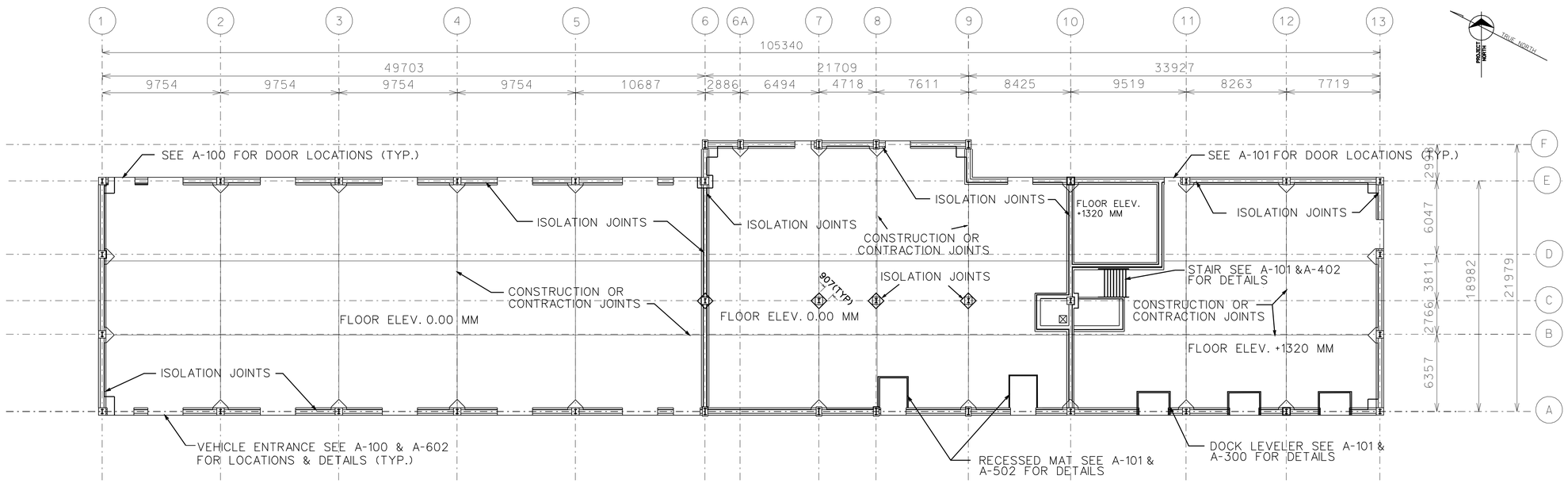

FIRST FLOOR SLAB PLAN

4000 2000 0 4000 8000
SCALE: 1:200

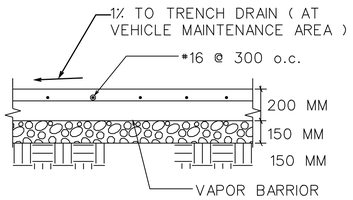

TYPICAL SLAB OTHER AREA

N.T.S.

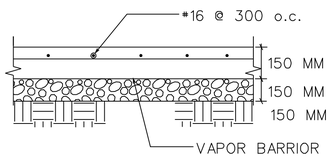

TYPICAL SLAB OFFICE AREA

N.T.S.

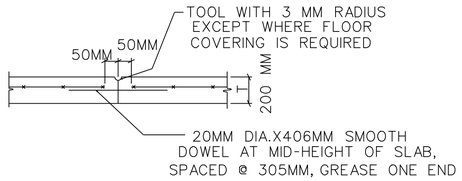

TYPICAL SLAB CONSTRUCTION JOINT

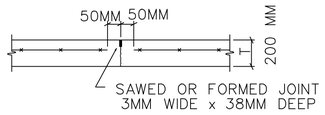

TYPICAL SLAB CONTRACTION JOINT

N.T.S.

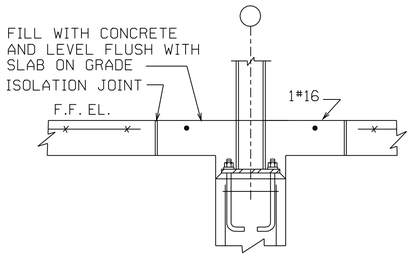

TYPICAL COLUMN ISOLATION JOINT

N.T.S.

NOTES:

1. SEE S-101 FOR FOUNDATION PLAN.
2. SEE A-100, A-502 FOR TRENCH DRAIN LOCATION AND DETAILS.

US Army Corps of Engineers
New York District

Mark	Description	Date	Appr.

Designed by: | Date: | Size: A1
Dwn by: | Ckd by: | Solicitation no.:
Reviewed by: | Contract no.:
Submitted by: | Plot date: 09-AUG-2005 14:54 | Plot by: eJones | Scale: 1:200/0:1000/0:0000

File name: S:\Resources\Library\Cad Drawings\Cad\Structural\S-102 FIRST FLOOR SLAB PLAN.dgn

U.S. ARMY ENGINEER DISTRICT
CORPS OF ENGINEERS
NEW YORK, NEW YORK

FORCE MODERNIZATION FN 57708
TRANSITIONAL FACILITY
FORT DRUM, NEW YORK

FIRST FLOOR SLAB PLAN

Sheet reference number:
S–102

SUBMITTED BY: E3ENDSVC PLOT DATE: 09-AUG-2005 14:54
S:\FILEROOM\MILITARY\FORT DRUM\FORCEMOD\STRUCTURAL\SHEET FILES\FORCEMOD57708_S-102XXX.DGN

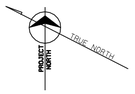

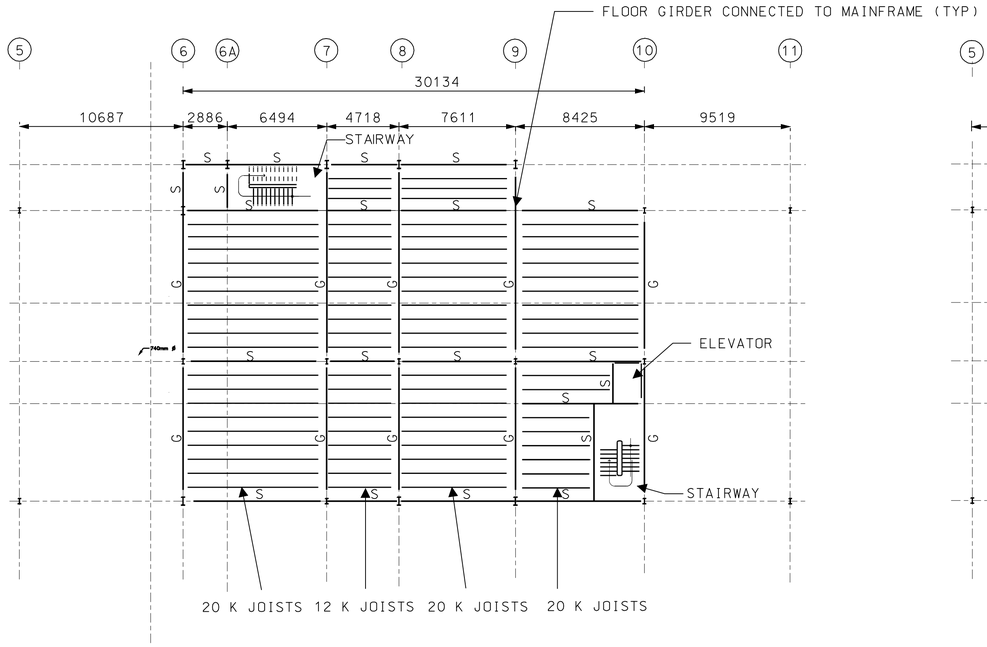

SECOND FLOOR PLAN

4000 2000 0 4000 8000
SCALE: 1:200

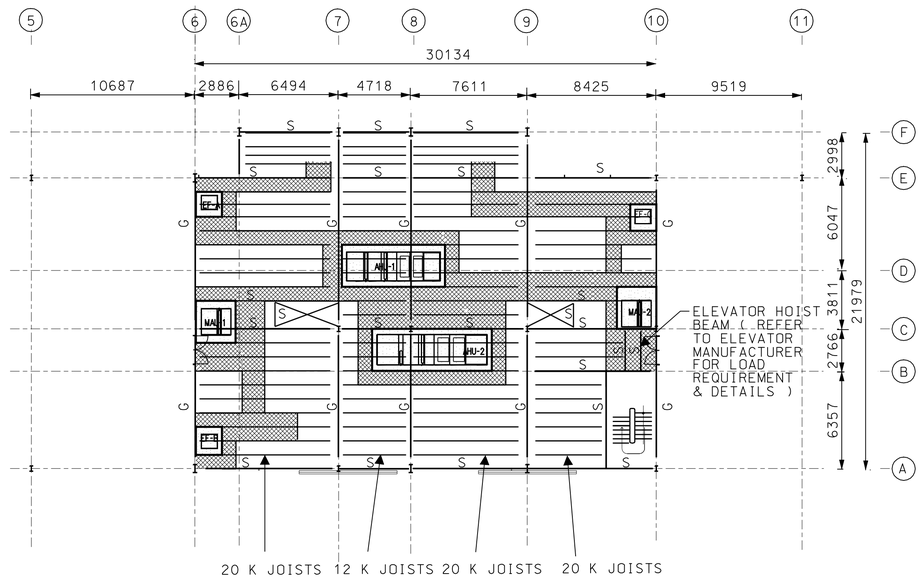

ATTIC FLOOR PLAN

4000 2000 0 4000 8000
SCALE: 1:200

LEGEND

G - STEEL GIRDER
S - STEEL STRINGER

CONCRETE METAL DECK

METAL GRATING

NOTES

1. SEE S-001 FOR GENERAL NOTES AND DESIGN REQUIREMENTS FOR METAL BUILDING SYSTEMS
2. TOP OF CONCRETE DECK SLAB ELEVATION:
   2ND FLOOR- EL. 3950MM
   ATTIC FLOOR- EL. 7875MM
3. STEEL DECK SLAB CONSTRUCTION: LIGHT WEIGHT CONCRETE METAL DECK SYSTEM (THICKNESS 100MM) WITH STEEL JOIST (MAXIMUM 510MM). TYPICAL SPACING FOR JOIST IS ABOUT 915MM.
4. REFER TO MECHANICAL, ELECTRICAL DRAWINGS FOR FLOOR PLAN, EQUIPMENT LAYOUT, AND RELATED INFORMATIONS.
5. CARBON STEEL BAR GRATING HAS CROSS BAR 2" C/C AND MIN. BARSIZE 1"X1/8".

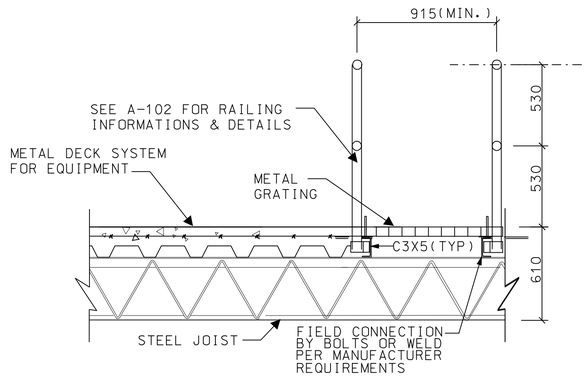

ATTIC GRATING DETAIL

400 200 0 400 800
SCALE: 1:20

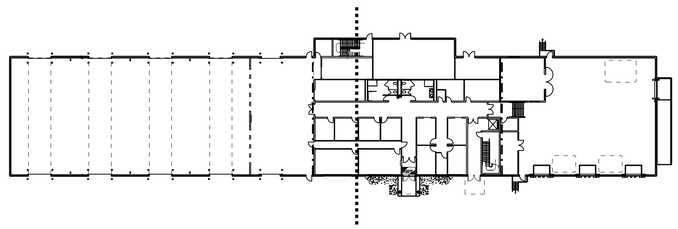

KEY PLAN

10000 5000 0 10000 20000
SCALE: 1:500

US Army Corps of Engineers
New York District

U.S. ARMY ENGINEER DISTRICT
CORPS OF ENGINEERS
NEW YORK, NEW YORK

DES. BR. CIVIL ENG. DES. SEC.
STRUCTURAL TEAM
CENAN-EN-DC-S

PN 57708
FORCE MODERNIZATION EDUCATION /TRANSITIONAL FACILITY
FORT DRUM, NEW YORK

SECOND FLOOR & ATTIC FLOOR PLANS

Sheet reference number:
S-103

SUBMITTED BY: E3ENDSVC
S:\FILEROOM\MILITARY\FORT DRUM\FORCEMOD\STRUCTURAL\SHEET FILES\FORCEMOD57708_S-FP0001.DGN
PLOT DATE: 09-AUG-2005 14:54

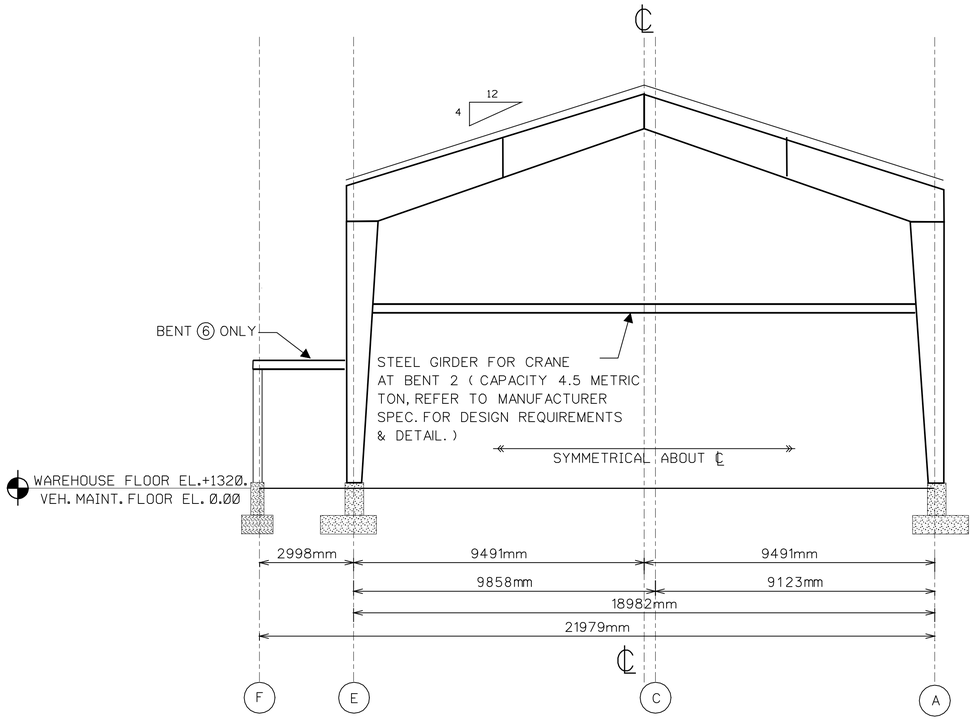

VEHICLE MAINTENACE, & WAREHOUSE

COLUMN LINES 1-6, & 10-13

200 100 0 200 400FT

SCALE: 1 : 100

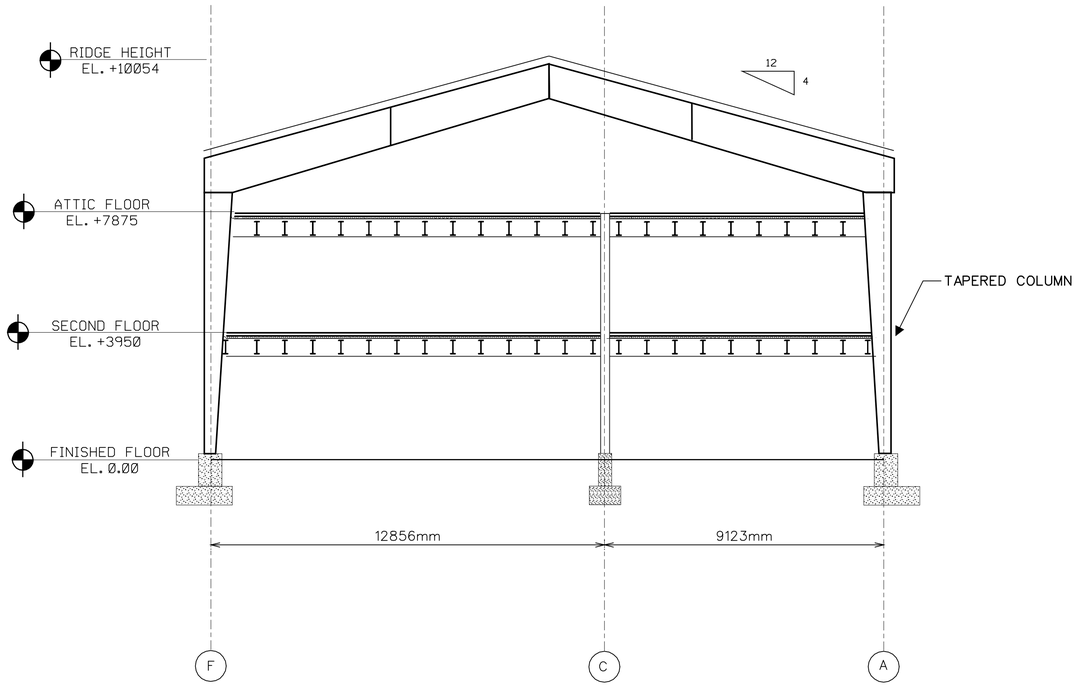

ADMINISTRATIVE BUILDING

COLUMN LINES 7,8,9

200 100 0 200 400FT

SCALE: 1 : 100

NOTES

1. SEE S-001 FOR GENERAL NOTES AND DESIGN REQUIREMENTS FOR METAL BUILDING SYSTEM.
2. SEE S-101 FOR FOUNDATION PLAN AND S-501 FOR TYPICAL FOUNDATION DETAILS.
3. SEE ARCHITECTURAL DRAWINGS FOR WINDOWS, DOORS AND RELATED OPENING INFORMATION.

US Army Corps of Engineers
New York District

Mark	Description	Date	Appr.

Mark	Description	Date	Appr.

U.S. ARMY ENGINEER DISTRICT
100 CHURCH STREET
NEW YORK, NEW YORK

DES. BR. CIVIL ENG. DES. SEC.
STRUCTURAL TEAM
CENAN-EN-DC-S

Designed by: SCO
Dwn by: SCO
Ckd by: DWR
Reviewed by: MCC
Submitted by:
Date: 07 XXX 2005
Solicitation no.: DACA65-A-05-0000
Contract no.: DACA65-A-05-0000
Rev date: 09-AUG-2005 14:54
Dwg no.: S-201
Scale: 1:100/200/1:50/200
Date: All

File name: S:\Master-Library\Fort Drum\Force\200\Structural\FMS\S-201.dgn

PN: 57708
FORCE MODERNIZATION EDUCATION /TRANSITIONAL FACILITY
FORT DRUM, NEW YORK

TYPICAL FRAME ELEVATIONS

Sheet reference number:

S-201

SUBMITTED BY: E3ENDSVC
S:\FILEROOM\MILITARY\FORT DRUM\FORCEMOD\STRUCTURAL\SHEET FILES\FORCEMOD57708_S-SC0001.DGN

PLOT DATE: 09-AUG-2005 14:54

SHEET FILE: S:\CADD STANDARDS\working files\MORDR_SHEET_2005-S-BM-H.dgn

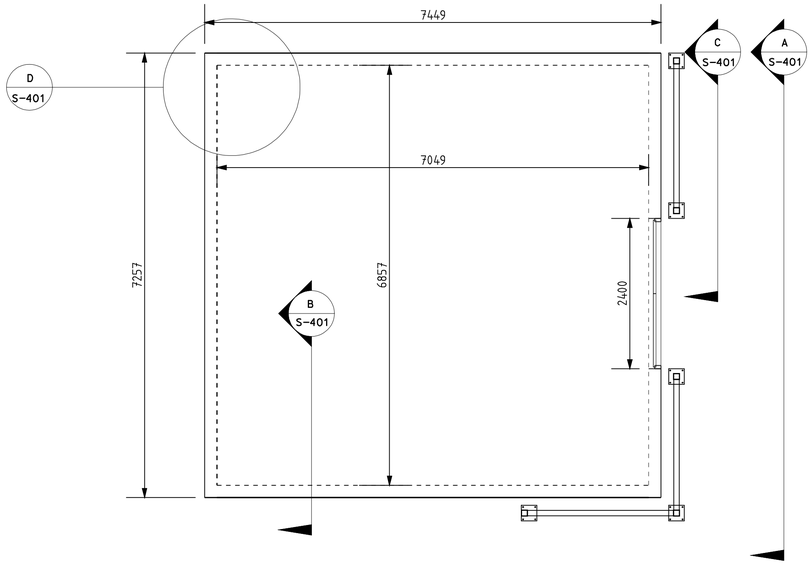

ARMS VAULT PLAN

SCALE: 1:50

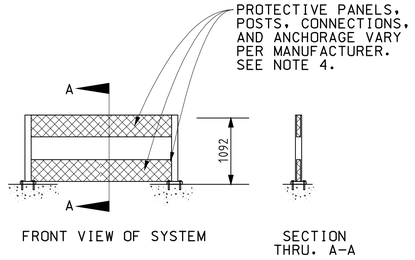

GUARD RAIL SYSTEM

C S-401

SCALE: 1:50

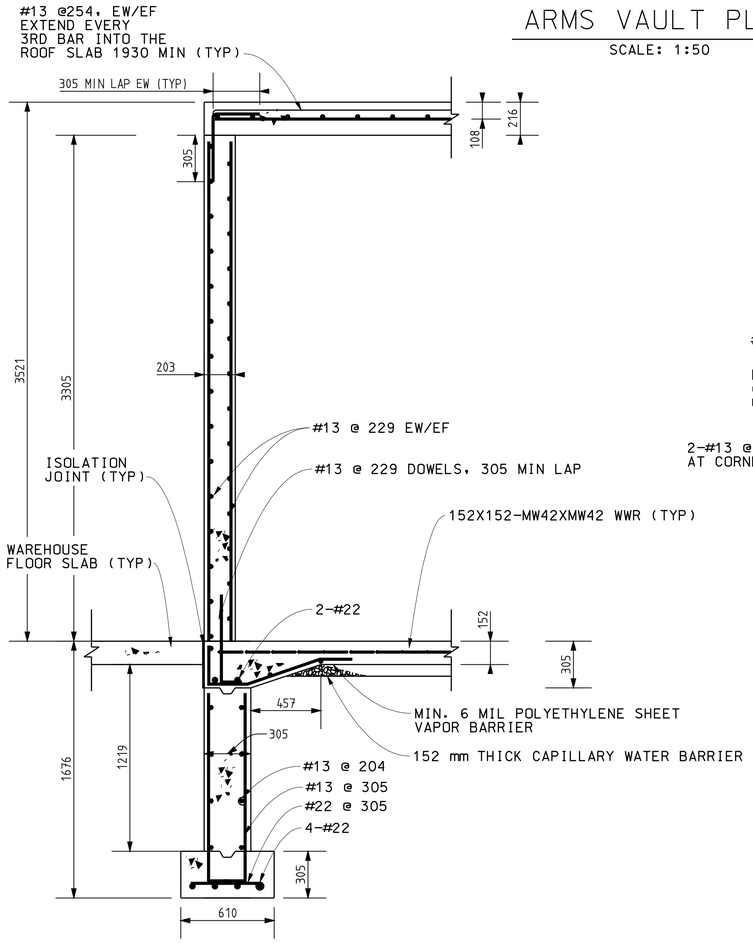

TYP. SECTION

B S-401

SCALE: 1:20

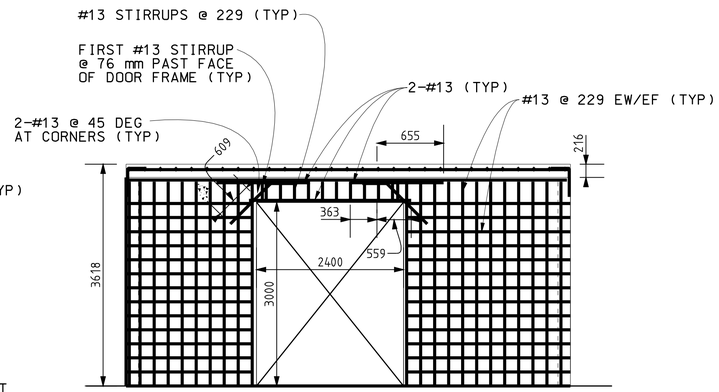

GUARD RAIL AND FOUNDATION NOT SHOWN

FRONT VIEW

A S-401

SCALE: 1:50

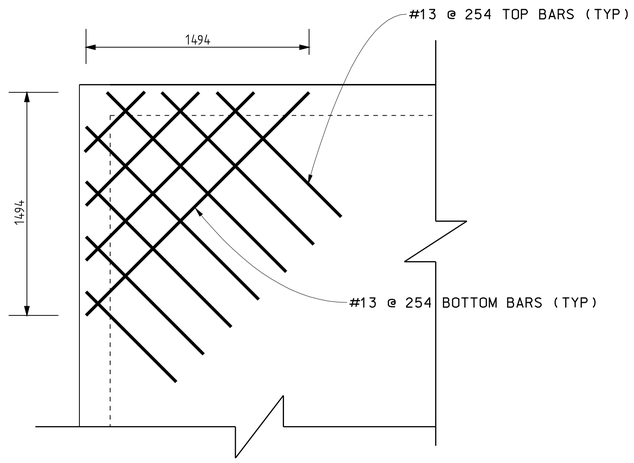

TYPICAL ROOF SLAB CORNER REINFORCING

D S-401

NOT TO SCALE

ARMS VAULT NOTES

1. ARMS VAULT CONSTRUCTION SHALL BE IN COMPLIANCE WITH ARMY REGULATION (AR) 190-11 "PHYSICAL SECURITY OF ARMS, AMMUNITION, AND EXPLOSIVES."
2. COORDINATE LOCATION OF ARMS VAULT WITH ARCHITECTURAL DRAWINGS.
3. GUARD RAIL SHOWN SHALL BE RATED FOR STOPPING A 44.5 kN FORKLIFT TRAVELING AT A SPEED OF 8 km/h.
4. ACCEPTABLE GUARD RAIL SYSTEMS ARE THOSE MANUFACTURED BY STEEL KING INDUSTRIES, INC., CISCO-EAGLE, INC., CUBIC DESIGNS, INC., OR BLUFF MANUFACTURING, INC. OR SIMILAR.
5. GUARD RAILING SHALL BE INSTALLED AFTER ARMS VAULT CONSTRUCTION IS COMPLETED; LOCATIONS SHALL BE VERIFIED BY THE CONTRACTING OFFICER'S REPRESENTATIVE PRIOR TO INSTALLATION.
6. VERIFY REQUIRED DOOR OPENING WITH VAULT DOOR MANUFACTURER. DOOR FRAMES SHALL BE RIGIDLY ANCHORED AND FILLED WITH CONCRETE OR GROUT TO PREVENT DISENGAGEMENT OF THE LOCK BOLT BY PRYING OR JACKING OF THE DOOR FRAME. THE FRAMES AND LOCKS FOR BOTH INTERNAL AND EXTERNAL DOORS SHALL BE SO DESIGNED AND INSTALLED TO PREVENT REMOVAL OF THE FRAME FACING OR THE BUILT-IN LOCKING MECHANISM TO ALLOW DISENGAGEMENT OF THE LOCK BOLT FROM OUTSIDE THE ARMS ROOM WHEN DOOR IS CLOSED AND LOCKED.
7. DOOR HINGES SHALL BE OF FIXED PIN SECURITY HINGE TYPE OR EQUIVALENT; EXPOSED HINGE PINS SHALL BE PEENED, SPOT WELDED, OR OTHERWISE SECURED TO PREVENT REMOVAL; AND HINGE MOUNTING SCREWS MAY NOT BE EXPOSED TO THE OUTSIDE OF ARMS ROOM. REFER TO ARCHITECTURAL DRAWINGS FOR OTHER SECURITY DOOR REQUIREMENTS.
8. WINDOWS, DUCTS, VENTS OR SIMILAR OPENINGS OF 2438 mm OR MORE WITH THE LEAST DIMENSION GREATER THAN 150 mm SHALL BE COVERED WITH BARS OR STEEL MESH EMBEDDED IN THE STRUCTURE OF THE ARMS VAULT OR WELDED TO A STEEL FRAME THAT SHALL BE SECURELY ATTACHED TO THE WALL WITH FASTENERS INACCESSIBLE FROM THE EXTERIOR OF THE ARMS STORAGE FACILITY.
9. REFER TO MECHANICAL AND ELECTRICAL DRAWINGS FOR THEIR RESPECTIVE REQUIREMENTS AND LOCATION OF UTILITY PENETRATIONS. ALL PENETRATIONS SHALL BE REINFORCED PER ACI 318.
10. REINFORCING STEEL SHALL CONFORM TO ACI SP-66 "ACI DETAILING MANUAL"

US Army Corps of Engineers New York District

Mark	Date	Description	Mark	Date	Description

Designed by: DRB | Date: | Size: A1
Dwn by: DRT | Chd by: | Solicitation no.:
Reviewed by: | Submitted by: | Contract no.:
File name: S:\Mission\Military\FtDrum\Facs\CD\Structural\S401 ARMS VAULT.dgn | Plot date: 09-AUG-2005 14:54 | Plot by: eldridge | Scale: 1:00000/00000

U.S. ARMY ENGINEER DISTRICT CORPS OF ENGINEERS, NEW YORK NEW YORK, NEW YORK
DES BR CIVIL ENG. DES. SEC. STRUCTURAL TEAM CENAN-EH-DC-S

FORCE MODERNIZATION FN 57708 FORT DRUM, NEW YORK (TRANSITIONAL FACILITY)

ARMS VAULT PLAN & DETAILS

Sheet reference number: S-401

SUBMITTED BY: E3ENDSVC
S:\FILEROOM\MILITARY\FORT DRUM\FORCEMOD\STRUCTURAL\SHEET FILES\FORCEMOD57708_S-401XXX.DGN
PLOT DATE: 09-AUG-2005 14:54

NOTES

1. SEE S-101 FOR FOUNDATION PLAN.
2. SEE S-102 FOR GRADE SLAB AND JOINT LAYOUT AND RELATED DETAILS.
3. SEE CIVIL DRAWING FOR SUB-BASE PREPARATION AND REQUIREMENTS.
4. ALL SUBGRADE SOIL UNDER FOOTING SHALL BE COMPACTED TO 95% MAXIMUN DENSITY.

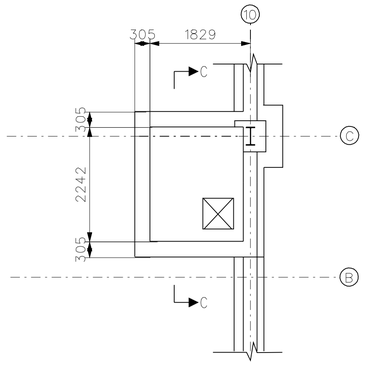

PLAN VIEW

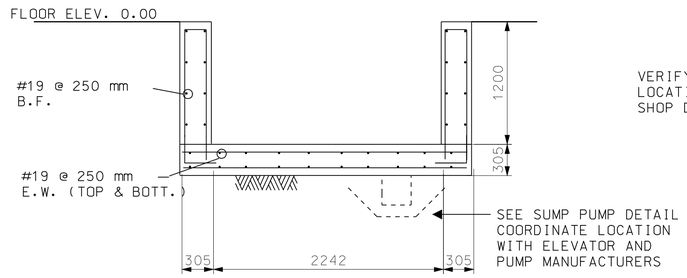

SECTION C-C

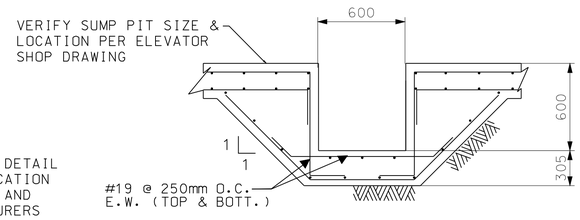

SUMP PIT

ELEVATOR PIT

600 300 0 600 1200
SCALE: 1 : 30

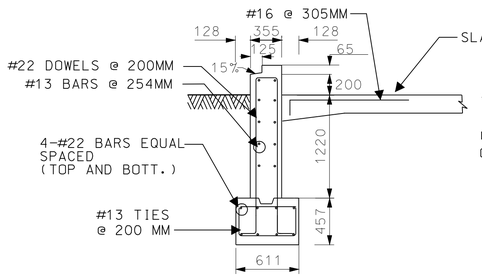

A S-501 TYPICAL WALL FOUNDATION

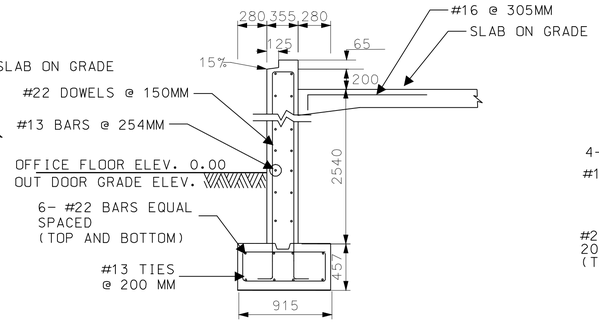

B S-501 WAREHOUSE WALL FOUNDATION

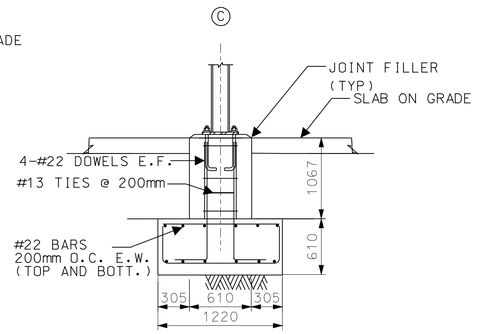

TYPICAL STEEL COLUMN FOUNDATION (TYPE - F4,F5,F7)

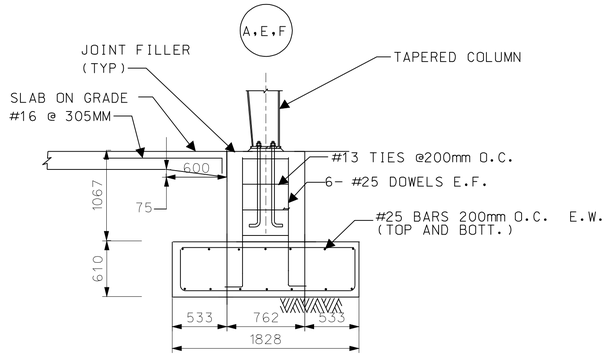

TYPICAL STEEL FRAME FOUNDATION (TYPE - F1,F2,F3,F6)

600 300 0 600 1200
SCALE: 1 : 30

US Army Corps of Engineers
New York District

Mark	Description	Date	Appr.

Designed by: SDD	Date: 09 XXX 2005
Dwn by: SDD	Solicitation no.: DACA51-A-05-0000
Ckd by: DWR	Contract no.: DACA51-A-05-8888
Reviewed by: MGC	Project no.: 97-04-05-005 1414
Submitted by:	File name: 09-AUG-2005 14:54 File by: sdd0000 Scale: 1:0000/1:00000

U.S. ARMY ENGINEER DISTRICT
NEW YORK DISTRICT
NEW YORK, NEW YORK

DES. BR. CIVIL ENG. DES. SEC.
STRUCTURAL TEAM
CENAN-EP-DC-S

File name: S:\Resources\military\fort drum\FORCEMOD\Structural\S-501.dgn

PR: 57708
FORCE MODERNIZATION EDUCATION /TRANSITIONAL FACILITY
FORT DRUM, NEW YORK

FOUNDATION SECTIONS AND DETAILS

Sheet reference number:
S-501

SHEET FILE: S:\CADD STANDARDS\working files\NORDER_SHEET_2006-S-0004-H.dgn

SUBMITTED BY: E3ENDSVC
S:\FILEROOM\MILITARY\FORT DRUM\FORCEMOD\STRUCTURAL\SHEET FILES\FORCEMOD57708_S-NP0001.DGN
PLOT DATE: 09-AUG-2005 14:54

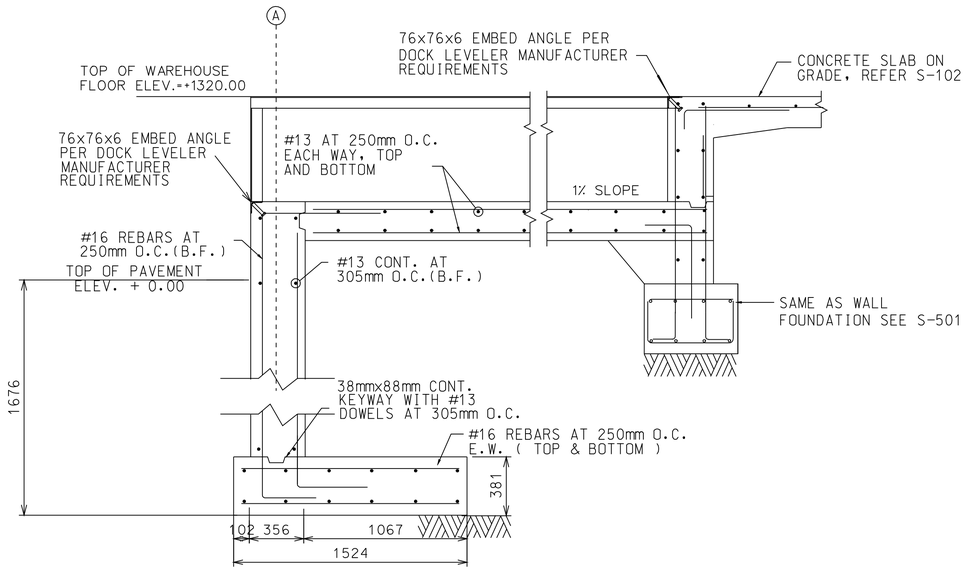

SECTION AT DOCK LEVELER (FOUNDATION TYPE F8)

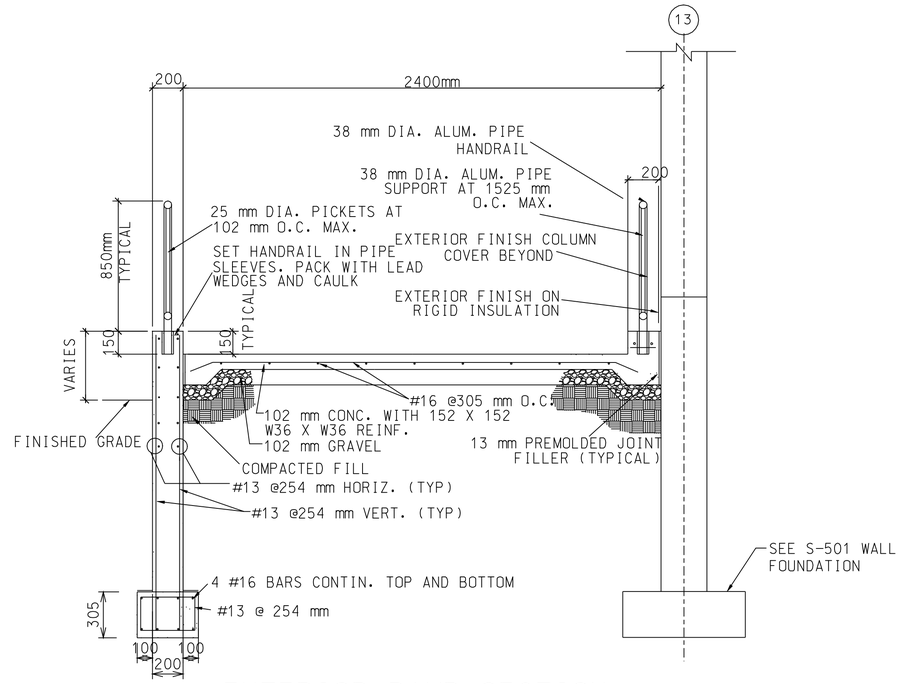

EXTERIOR RAMP SECTION

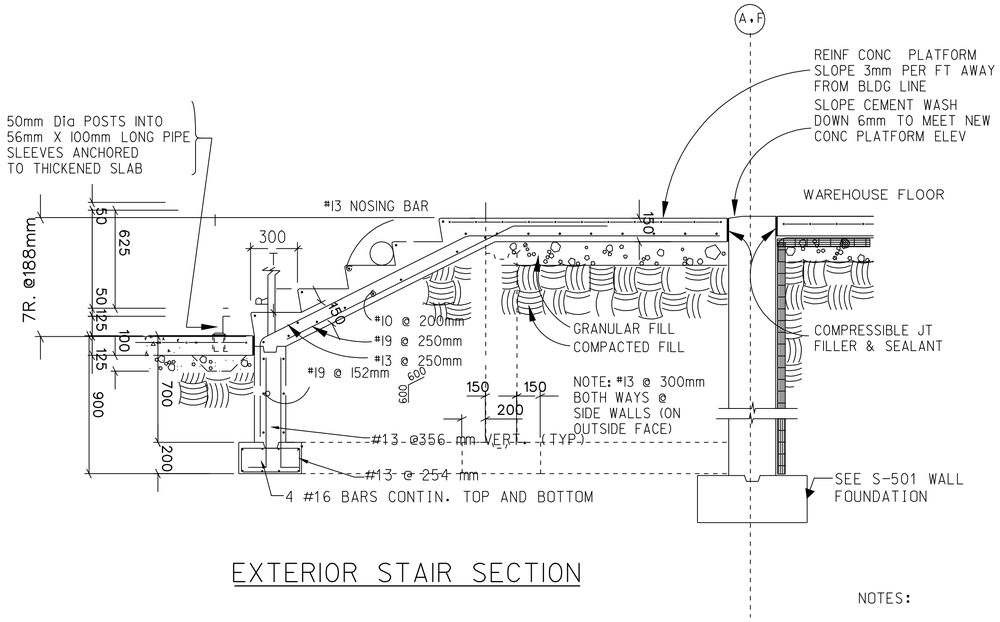

EXTERIOR STAIR SECTION

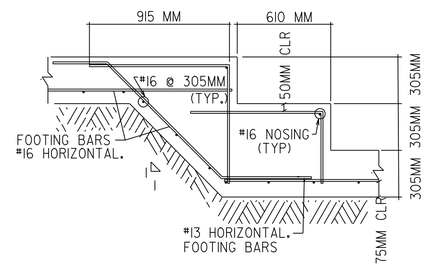

STEPPED REINFORCEMENT DETAIL

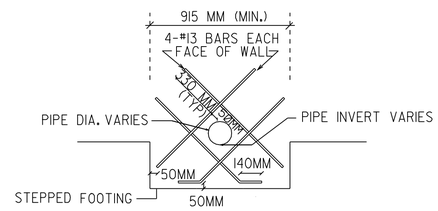

MODIFIED FOUNDATION WALL PENETRATION DETAIL

NOTE: UNDER GROUND UTILITIES SHALL ENTER THE BLDG THRU THE FOUNDATION WALL. THE CONTRACTOR SHALL CALCULATE THE NUMBER OF STEPS IN ORDER TO REACH A SUFFICIENT DEPTH TO CLEAR THE PIPE INVERTS. CALCULATIONS SHALL BE SUBMITTED TO THE RESIDENT ENGINEER FOR APPROVAL.

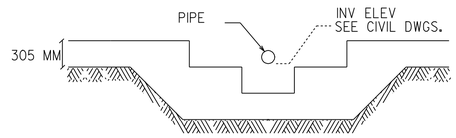

TYPICAL STEP FOOTING DETAIL

NOTES:

1. SEE S-101 FOR FOUNDATION PLAN
2. ALL SUBGRADE SOIL UNDER FOOTING SHALL BE COMPACTED TO 95% MAXIMUM DENSITY.

400 200 0 400 800

SCALE: 1 : 20

US Army Corps of Engineers New York District

Mark	Date	Description	Mark	Date	Description

Designed by: SDD	Date: 07 Oct. 2005	Date: AS
Dwn by: SDD	Ckd by: DWR	Solicitation no.: DACA51-A-05-0000
Submitted by: MDC	Reviewed by:	Contract no.: DACA51-A-05-0000
Submitted by:		Rel date: 09-AUG-2005 14:55 Plot by: eFORM Date: 1:20/0000/100000

U.S. ARMY ENGINEER DISTRICT CORPS OF ENGINEERS, NEW YORK NEW YORK, NEW YORK

DES. BR. CIVIL ENG. DES. SEC. STRUCTURAL TEAM CENAN-EH-DC-S

FILE NAME: S:\Division\Military\Fort Drum\Construction\Drawings\S-502.dgn

PN: 57708

FORCE MODERNIZATION EDUCATION /TRANSITIONAL FACILITY FORT DRUM, NEW YORK

MISCELLANEOUS DETAILS

Sheet reference number:

S–502

SHEET FILE: S:\CADD STANDARDS\working files\FORCEMOD_SHEET_SDD\S-502.dgn

SUBMITTED BY: E3ENDSVC
S:\FILEROOM\MILITARY\FORT DRUM\FORCEMOD\STRUCTURAL\SHEET FILES\FORCEMOD57708_S-SB502A.DGN
PLOT DATE: 09-AUG-2005 14:55

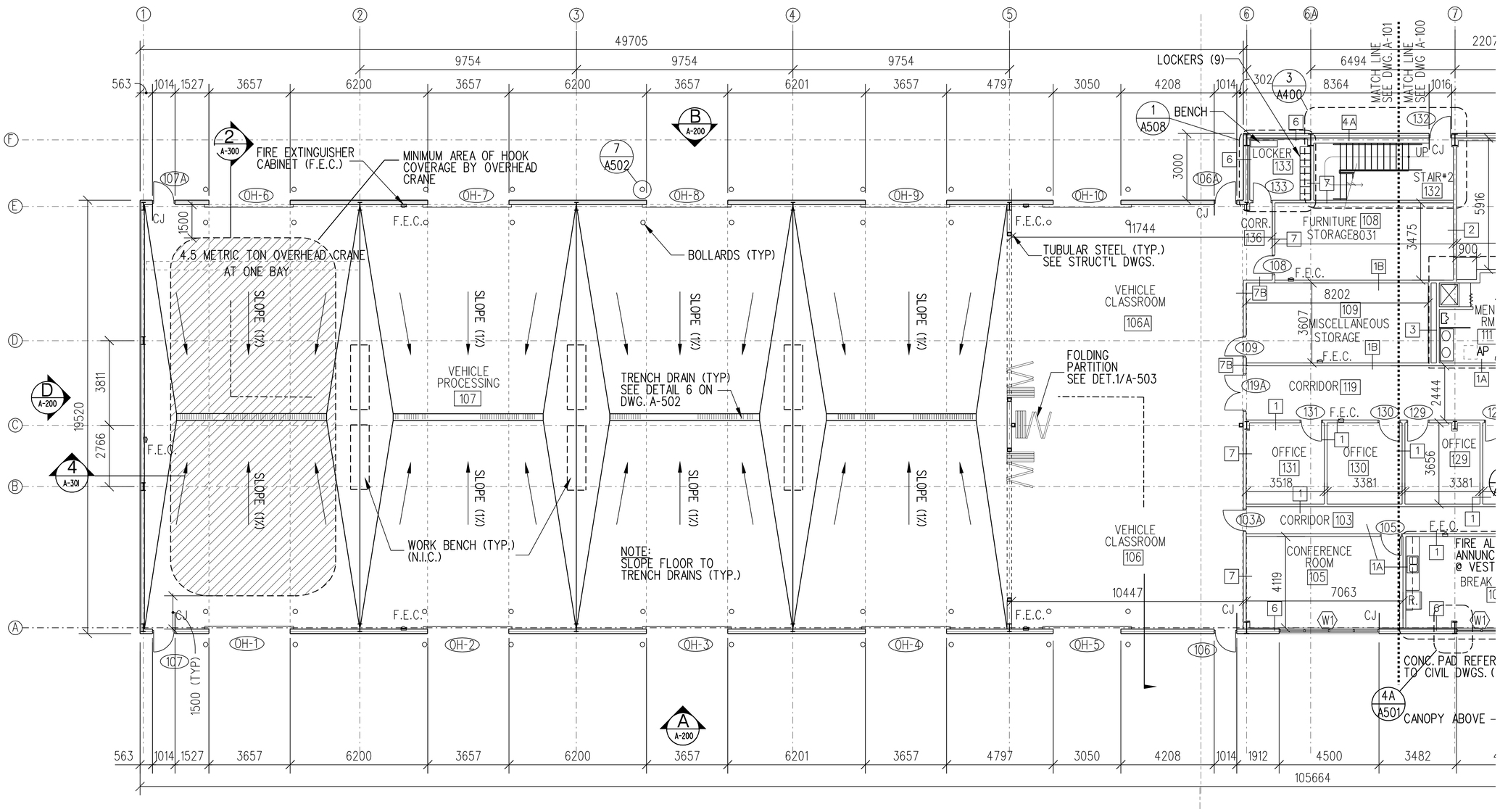

1A A100 FIRST FLOOR PLAN

SCALE 1:100

GENERAL NOTES

BUILDING GROSS AREA:
2,729 SQ. METERS
29,375.66 SF.

1. REFER TO CIVIL DWGS FOR GRADE ELEVATION
2. FIRE EXTINGUISHER CABINETS TO BE SEMI-RECESSED ELECTROSTATIC WHITE EPOXY FINISH, SEE DETAIL 1, SHEET A-504
3. PROVIDE CONTROL JOINTS IN WALLS LONGER THAN 9144 mm AND AT ONE SIDE OF WALL OPENINGS.

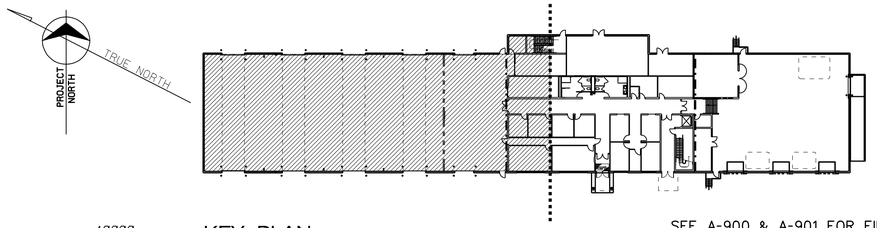

0 2000 4000 10000
SCALE: 1:100

KEY PLAN

SCALE 1:500

SEE A-900 & A-901 FOR FIRE-RATED PARTITIONS

ALL DIMENSIONS ARE IN MILLIMETERS

US Army Corps of Engineers
New York District

U.S. ARMY ENGINEER DISTRICT
CORPS OF ENGINEERS
NEW YORK, NEW YORK

Designed by: | Date: | Job: | Date: | Description | Mark
Dwn by: | Ckd by: | Solicitation no.:
Reviewed by: | Contract no.:
Submitted by: | Plot date: 09-AUG-2006 12:12 | Plot by: | Scale: 1:200/0.1:200/0.
File name: S:\Barnard Hallway Fort Drum\Force\DD\Architectural\Force\DD\FORCE_A-100xxx.dgn

FORCE MODERNIZATION EDUCATION /TRANSITIONAL FACILITY
FORT DRUM, NEW YORK

FIRST FLOOR PLAN

PN 5709

Sheet reference number:
A–100

Submitted by: e3endnsh
S:\filer-oom\military\Fort Drum\ForceMOD\Architectural\ForceMOD57708_A-100xxx.dgn
Plot Date: 09-AUG-2005 12:12

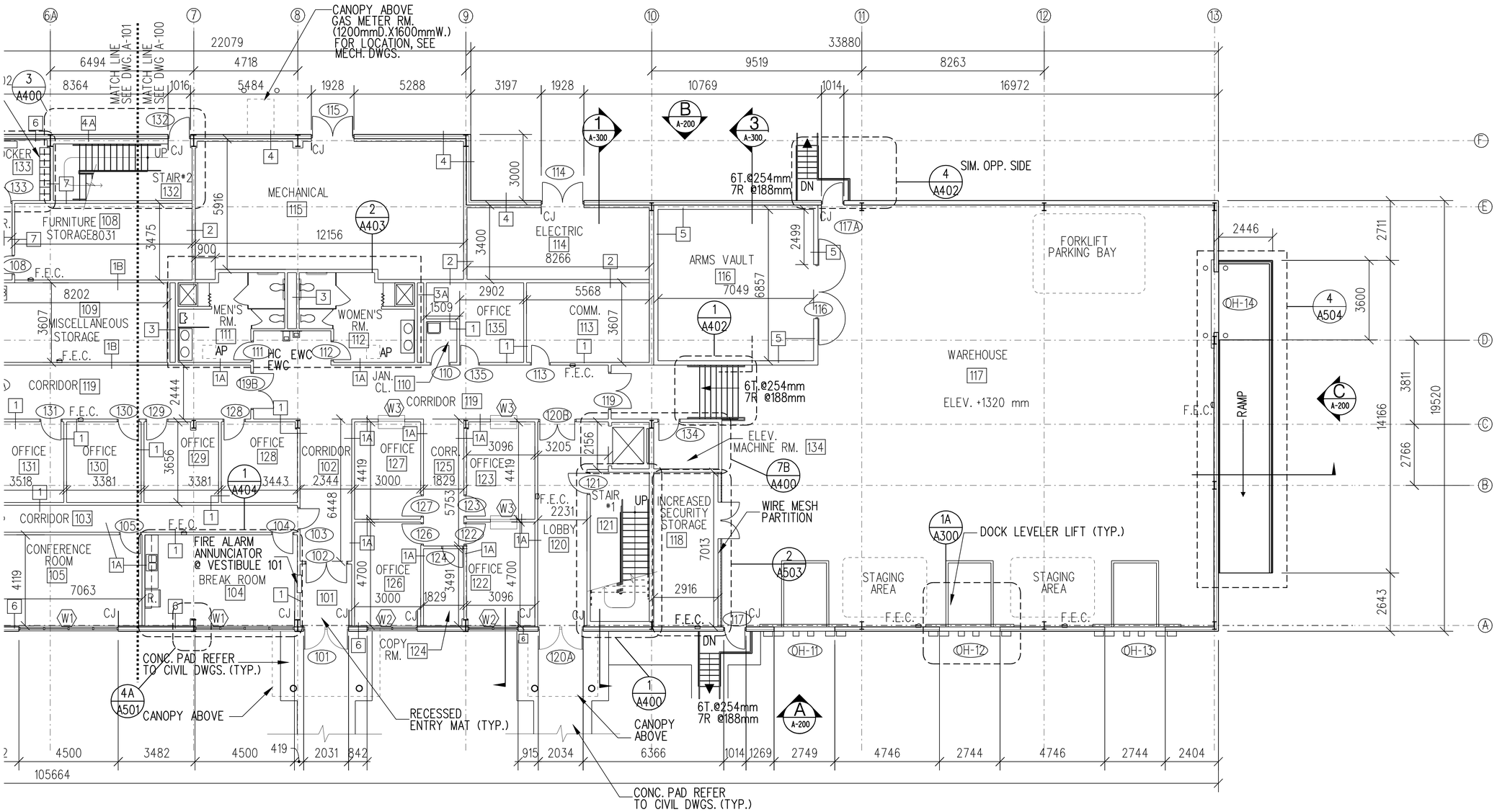

1B / A101 FIRST FLOOR PLAN

SCALE 1:100

GENERAL NOTES

BUILDING GROSS AREA:
2,729 SQ. METERS
29,375.66 SF.

1. REFER TO CIVIL DWGS FOR GRADE ELEVATION
2. FIRE EXTINGUISHER CABINETS TO BE SEMI-RECESSED ELECTROSTATIC WHITE EPOXY FINISH, SEE DETAIL 1, SHEET A-504
3. PROVIDE CONTROL JOINTS IN WALLS LONGER THAN 9144 mm AND AT ONE SIDE OF WALL OPENINGS.

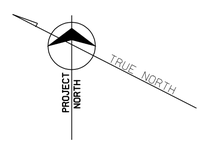

0 2000 4000 10000
SCALE: 1:100

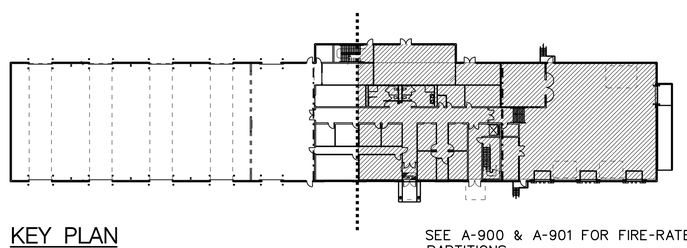

KEY PLAN
SCALE 1:500

SEE A-900 & A-901 FOR FIRE-RATED PARTITIONS

ALL DIMENSIONS ARE IN MILLIMETERS

US Army Corps of Engineers
New York District

U.S. ARMY ENGINEER DISTRICT
CORPS OF ENGINEERS
NEW YORK, NEW YORK

Designed by: Date:
Dwn by: Ckd by: Solicitation no.:
Reviewed by: Contract no.:
Submitted by: Plot date: 09-AUG-2005 12:12 Plot scale: 1 Plot date: 12/00/00/1:00000
File name: S:\Manson military\Fort Drum\ForceMOD\Architectural\Floor\A-101xxx.dgn

PN 57708
FORCE MODERNIZATION EDUCATION (TRANSITIONAL FACILITY)
FORT DRUM, NEW YORK

FIRST FLOOR PLAN

Sheet reference number:
A-101

Submitted by: e3endnsh
S:\fileroom\military\Fort Drum\ForceMOD\Architectural\Floor\57708_A-101xxx.dgn
Plot Date: 09-AUG-2005 12:12

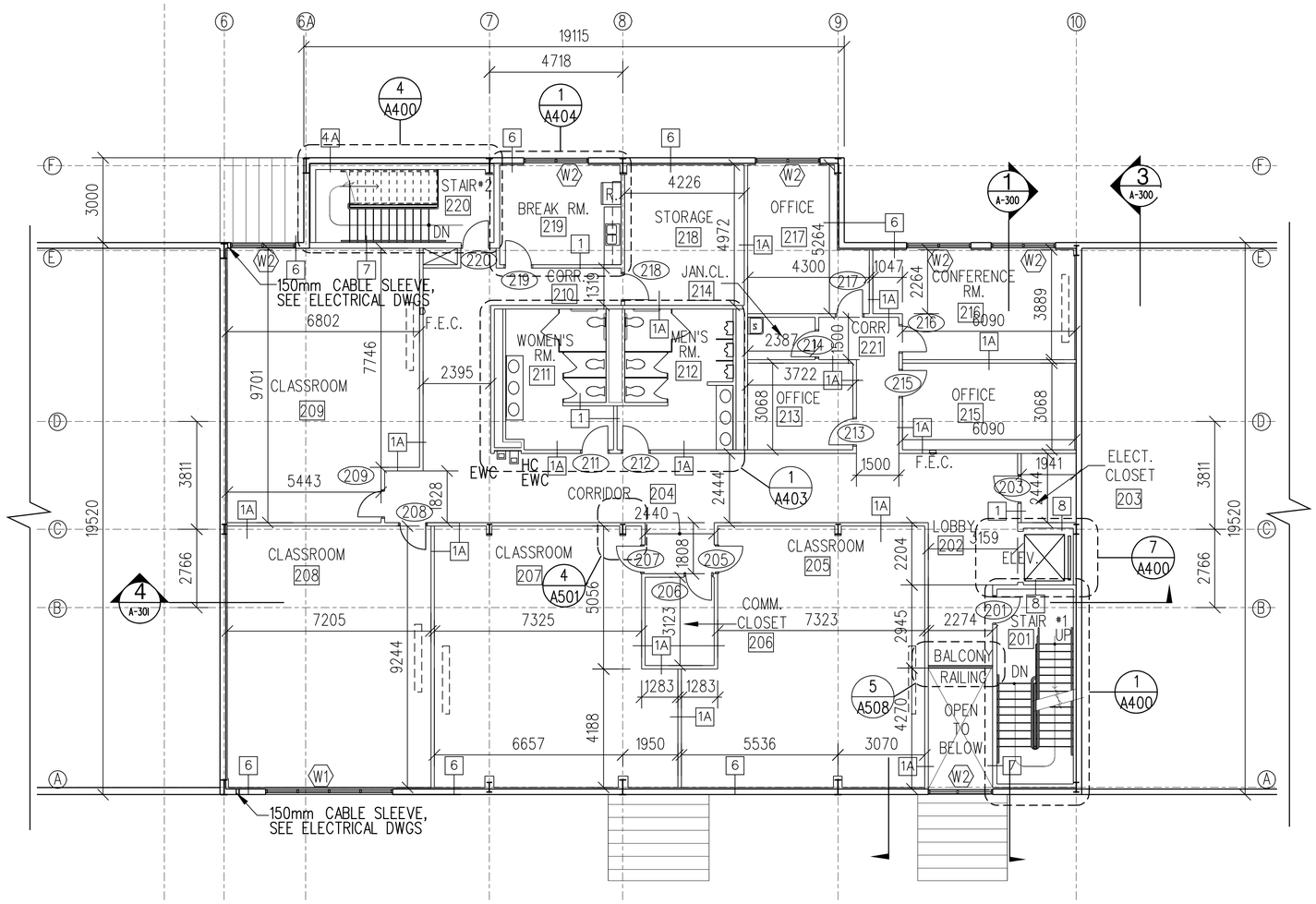

1A SECOND FLOOR PLAN
A101A SCALE 1:100

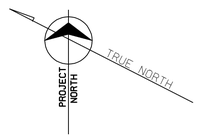

0 2000 4000 10000
SCALE: 1:100

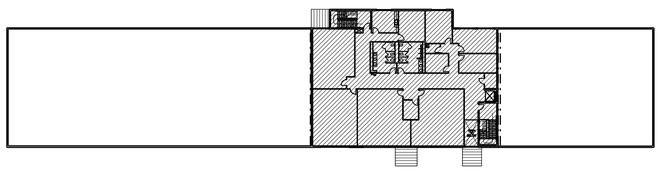

KEY PLAN
SCALE 1:500

SEE A-900 & A-901 FOR FIRE-RATED PARTITIONS

ALL DIMENSIONS ARE IN MILLIMETERS

US Army Corps of Engineers
New York District

Mark	Description	Date	Appr.

Mark	Description	Date	Appr.
		09 AUG 2006	

U.S. ARMY ENGINEER DISTRICT
CORPS OF ENGINEERS
NEW YORK, NEW YORK

Designed by:
Dwn by:
Ckd by:
Reviewed by:
Submitted by:
Date:
Solicitation no.:
Contract no.:
Plot date: 09-AUG-2006 12:13
Plot by: e3endnsh
Scale: 1:0000/1:00000
File name: S:\Mission\Military\Fort Drum\FortDrum\Architectural\Forced\D07708_A-101Axx.dgn

FORCE MODERNIZATION EDUCATION /TRANSITIONAL FACILITY
FORT DRUM, NEW YORK

PN 57708

SECOND FLOOR PLAN

Sheet reference number:
A–101A

Submitted by: e3endnsh
S:\filer-oom\military\Fort Drum\ForceMOD\Architectural\ForceMOD57708_A-101Axx.dgn
Plot Date: 09-AUG-2005 12:13

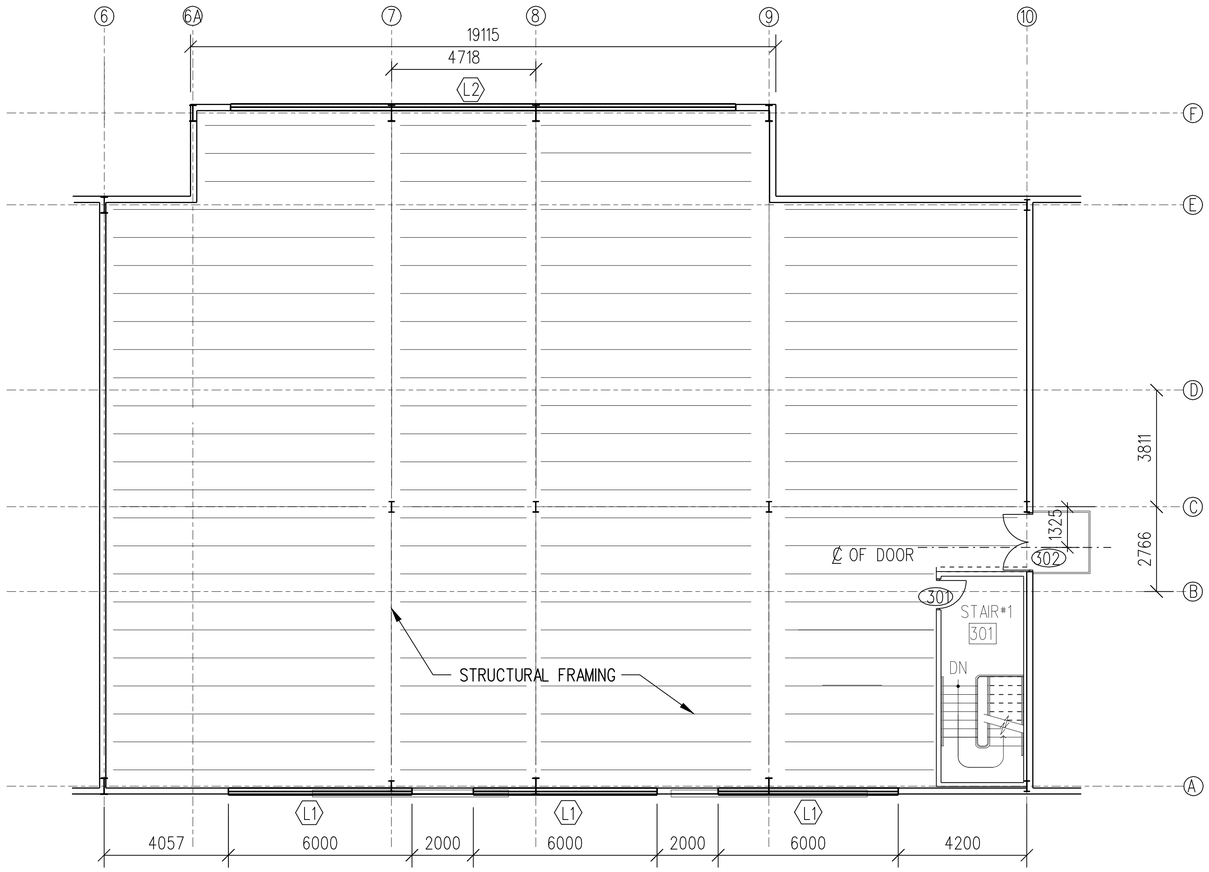

A
A102 A102 ADMINISTRATIVE CORE ATTIC PLAN
SCALE: 1:100

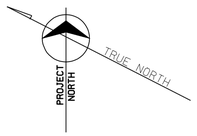

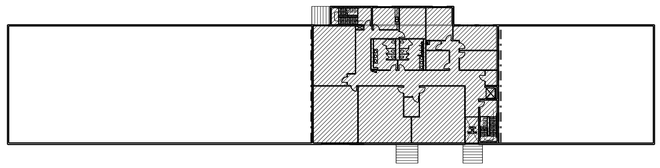

0 2000 4000 10000
SCALE: 1:100

KEY PLAN
SCALE 1:500

US Army Corps of Engineers
New York District

U.S. ARMY ENGINEER DISTRICT
CORPS OF ENGINEERS
NEW YORK, NEW YORK

PN 57708
FORCE MODERNIZATION EDUCATION /TRANSITIONAL FACILITY
FORT DRUM, NEW YORK

ATTIC PLAN

Sheet reference number:
A–102

Submitted by: e3endnsh Plot Date: 09-AUG-2005 12:13
S:\fileroom\military\Fort Drum\ForceMOD\Architectural\ForceMOD57708_A-102xxx.dgn

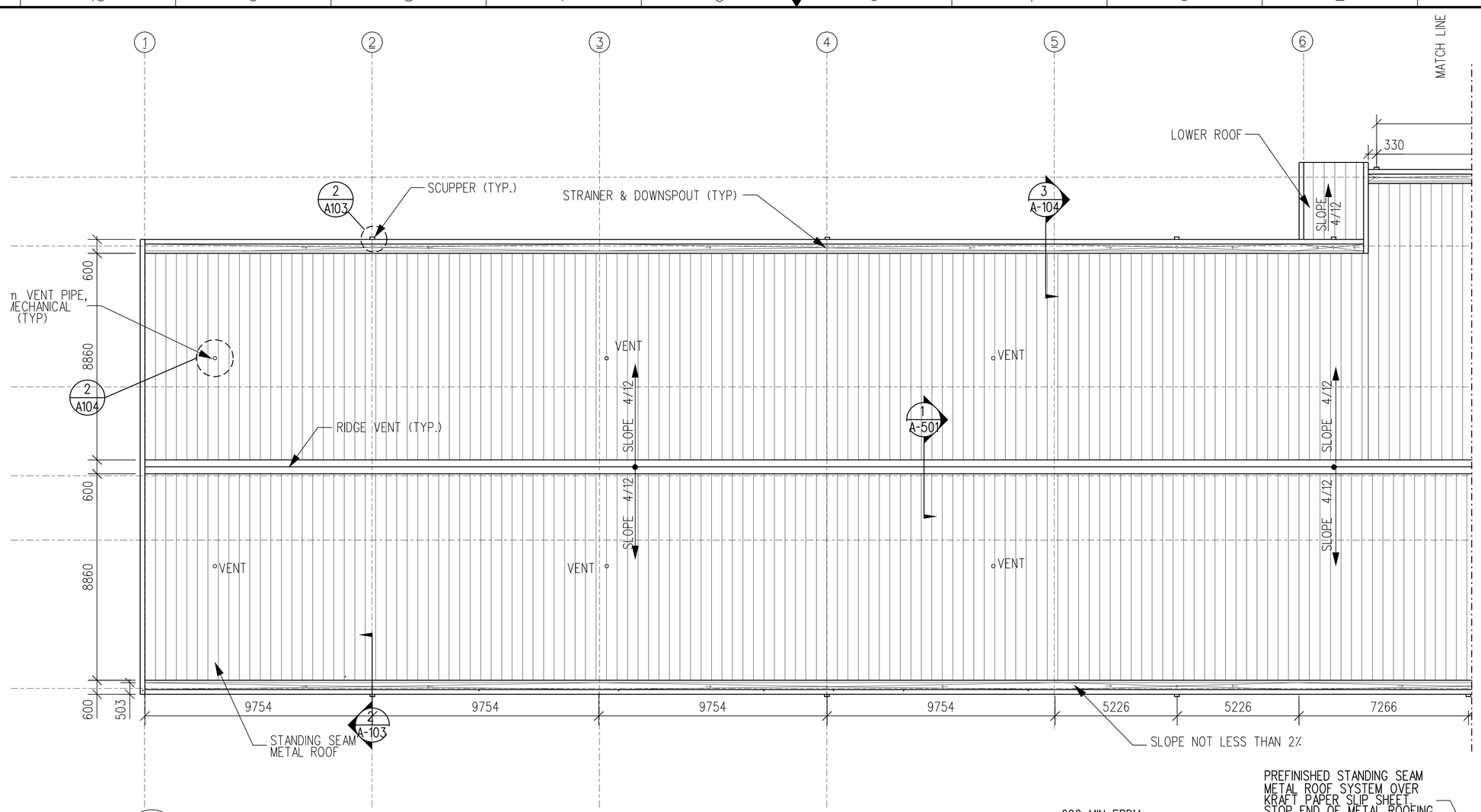

1A A103 ROOF PLAN
SCALE 1:100

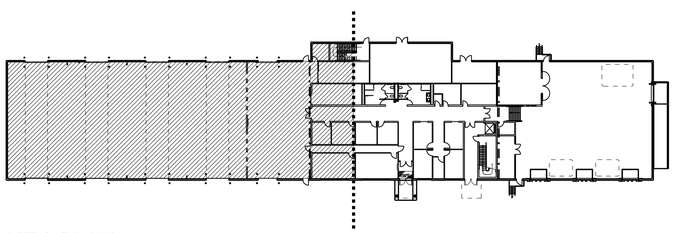

KEY PLAN
SCALE 1:500

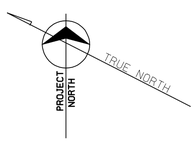

0 2000 4000 10000
SCALE: 1:100

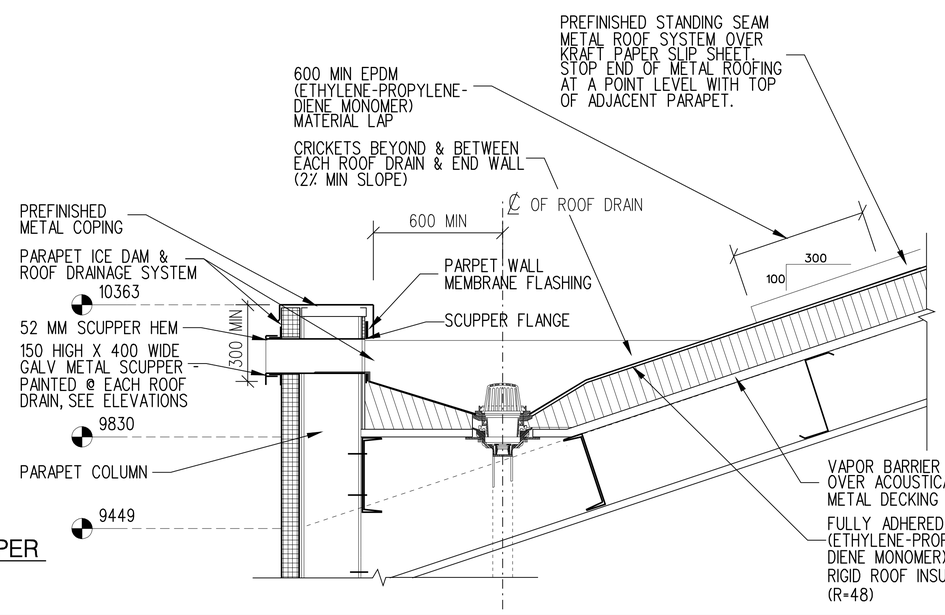

2 A103 DETAIL AT SCUPPER
SCALE 1:20

ALL DIMENSIONS ARE IN MILLIMETERS

US Army Corps of Engineers
New York District

Mark	Description	Date	Appr.

Mark	Description	Date	Appr.
		09 AUG 2005	

U.S. ARMY ENGINEER DISTRICT
CORPS OF ENGINEERS
NEW YORK, NEW YORK

Designed by:
Dwn by: Ckd by:
Reviewed by:
Submitted by:
Date:
Solicitation no.:
Contract no.:
File name: S:\Mission\Military\Fort Drum\FortDrum\Architectural\FortDrumCONTRA_A-103.dgn
File date: 09-AUG-2005 12:13
Plot date: 09-AUG-2005
Size: 22x34
Scale: 1/200(X)1/200(Y)

PN 57708
FORCE MODERNIZATION EDUCATION / TRANSITIONAL FACILITY
FORT DRUM, NEW YORK

ROOF PLAN & DETAIL

Sheet reference number:
A–103

Submitted by: e3endnsh
S:\fileroom\military\Fort Drum\ForceMOD\Architectural\ForceMOD57708.A-103xxx.dgn
Plot Date: 09-AUG-2005 12:13

MATCH LINE

18226

9639

330

STRAINER & DOWNSPOUT (TYP.)

VENT

RIDGE VENT

SLOPE 4/12

1 A-501

2 A104

3 A-104

11529 | 11529 | 10630 | 7408 | 7408

STANDING SEAM METAL CANOPY

PROJECT NORTH

TRUE NORTH

0 2000 4000 10000

SCALE: 1:100

1B A104 ROOF PLAN (CONTINUED)

SCALE 1:100

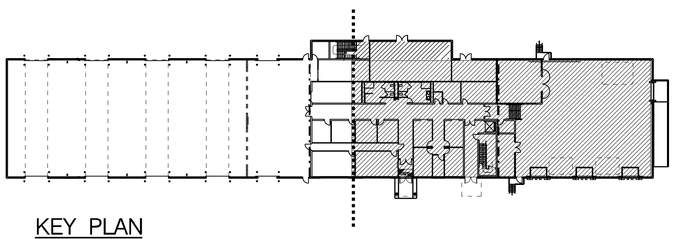

KEY PLAN

SCALE 1:500

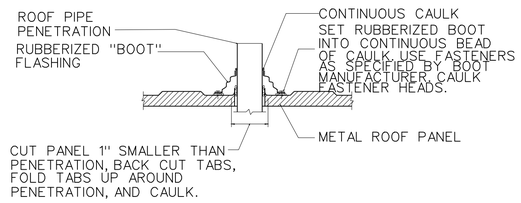

2 A104 ROOF PENETRATION DETAIL

SCALE: N.T.S.

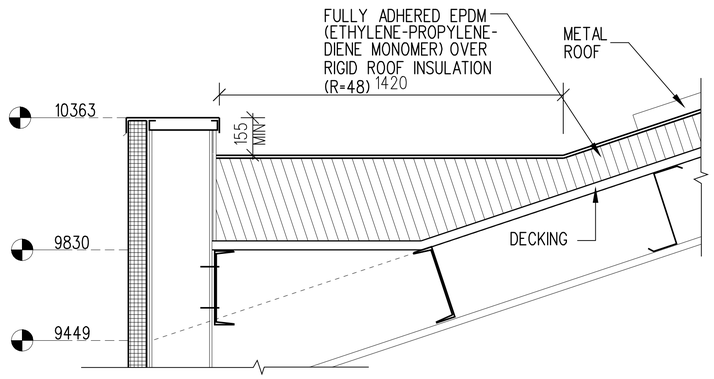

3 A104 DETAIL AT CRICKET HIGH POINT

SCALE: N.T.S.

ALL DIMENSIONS ARE IN MILLIMETERS

US Army Corps of Engineers
New York District

U.S. ARMY ENGINEER DISTRICT
CORPS OF ENGINEERS
NEW YORK, NEW YORK

Designed by:
Dwn by:
Ckd by:
Reviewed by:
Submitted by:
Date:
Solicitation no.:
Contract no.:
Size: 24x36
Scale: AS
Plot date: 09-AUG-2005 12:13
File name: S:\Mission\Military\Fort Drum\ForceMOD\Architectural\Floor\A104.dgn
Plot by: e3endnsh
Date: 1/00000/1/00000

FORCE MODERNIZATION EDUCATION (TRANSITIONAL FACILITY
PN 57708
FORT DRUM, NEW YORK

ROOF PLAN & DETAILS

Sheet reference number:
A–104

Submitted by: e3endnsh
S:\fileroom\military\Fort Drum\ForceMOD\Architectural\ForceMOD57708_A-104xxx.dgn
Plot Date: 09-AUG-2005 12:13

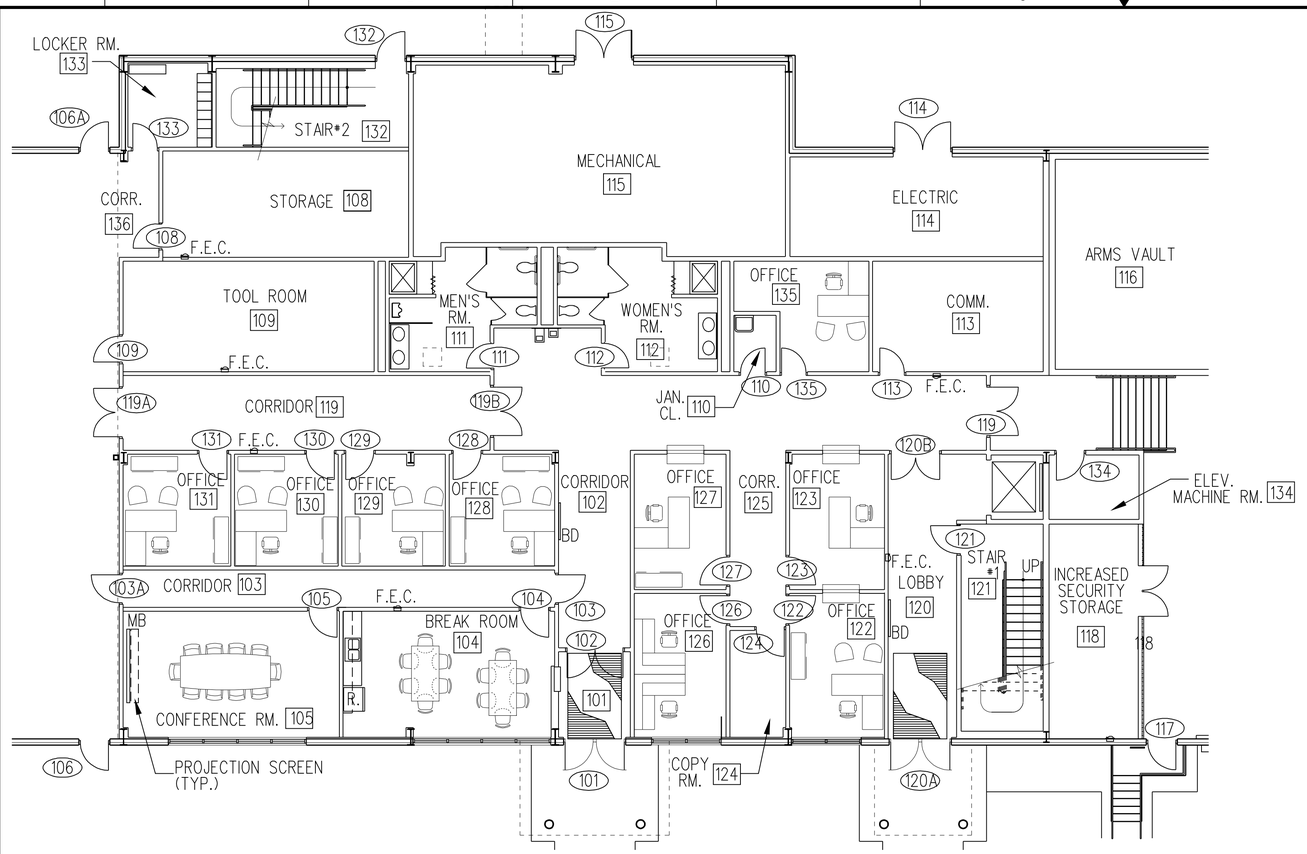

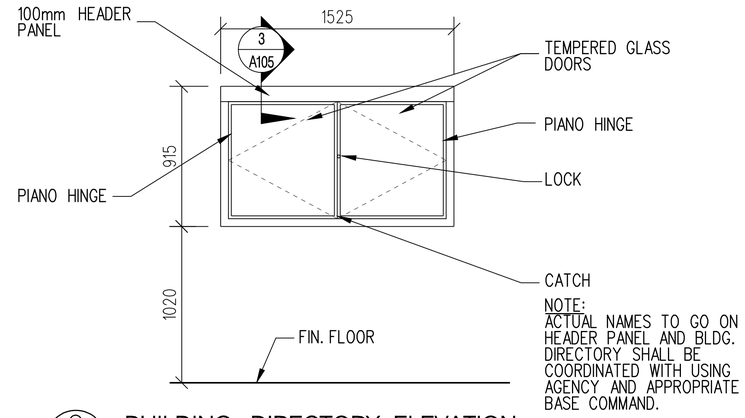

NOTE:
ACTUAL NAMES TO GO ON HEADER PANEL AND BLDG. DIRECTORY SHALL BE COORDINATED WITH USING AGENCY AND APPROPRIATE BASE COMMAND.

2 BUILDING DIRECTORY ELEVATION
A105 A105 SCALE: 1:20

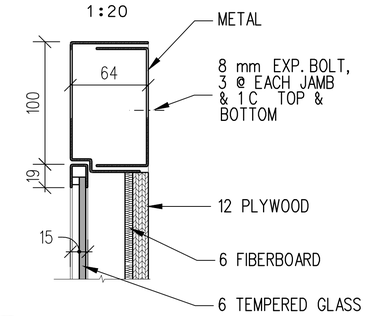

3 BUILDING DIRECTORY DETAIL
A105 A105 SCALE: N.T.S.

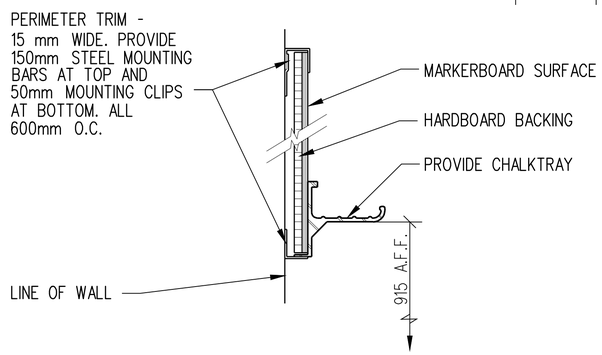

1 MARKERBOARD DETAIL
A105 A105 SCALE: 1:5

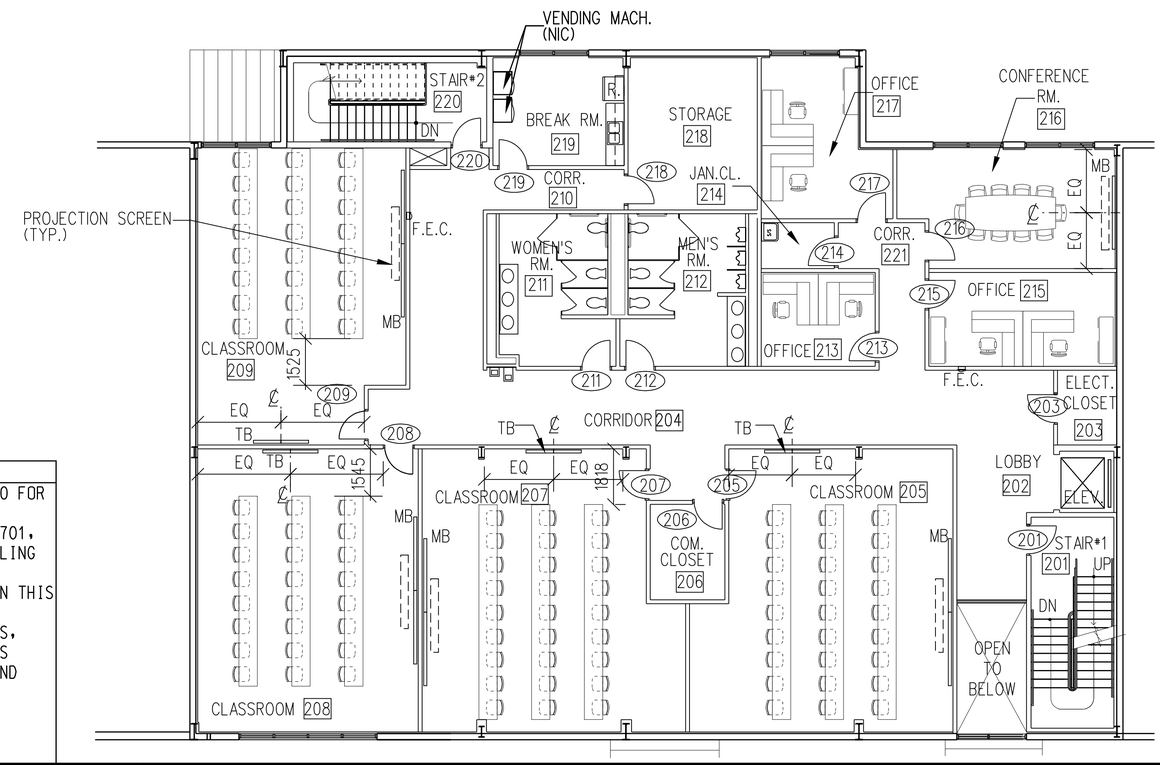

CONFERENCE / CLASSROOM EQUIPMENT

ROOM NO.	ROOM NAME	EQUIPMENT	QTY.	REMARKS
102	CORRIDOR	BUILDING DIRECTORY (BD)	1	SEE SPEC 10440A
105	CONFERENCE RM.	MARKER BOARD (MB)	1	1525mm L X 1828mm W
		PROJECTION SCREEN	1	REFER TO DWG. A-504
120	LOBBY	BUILDING DIRECTORY (BD)	1	SEE SPEC 10440A
205 207 208 209	CLASSROOMS	MARKER BOARD (MB)	2 EA.	1525mm L X 2400mm W
		PROJECTION SCREEN	1 EA.	REFER TO DWG. A-504
		TACK BOARD (TB)	2 EA.	1525mm L X 914mm W
216	CONFERENCE RM.	MARKER BOARD (MB)	1	1525mm L X 1828mm W
		OVERHEAD PROJ. SCREEN	1	REFER TO DWG. A-504

NOTES

1) REFER TO SPEC. SECTION 10100 FOR FURTHER INFORMATION.
2) REFER TO DRAWINGS A-700, A-701, AND A-702 FOR LOCATIONS OF CEILING RECESSED PROJECTION SCREENS.
3) ALL EQUIPMENT LIST HEREIN ON THIS SCHEDULE SHALL BE PROVIDED BY CONTRACTOR. ALL TABLES, CHAIRS, WORKSTATIONS, AND FILE CABINETS SHOWN ARE FOR REFERENCE ONLY AND ARE NOT IN CONTRACT.
4) CONTRACTOR SHALL PROVIDE ADDITIONAL REINFORCING FOR ALL SURFACE MOUNTED EQUIPMENT.

US Army Corps of Engineers New York District

U.S. ARMY ENGINEER DISTRICT CORPS OF ENGINEERS NEW YORK, NEW YORK

PN 57708 FORCE MODERNIZATION EDUCATION /TRANSITIONAL FACILITY FORT DRUM, NEW YORK

FURNITURE PLAN

Sheet reference number: A-105

Submitted by: e3endnsh Plot Date: 09-AUG-2005 12:13
S:\filerooms\military\Fort Drum\ForceMOD\Architectural\ForceMOD57708_A-105xxx.dgn

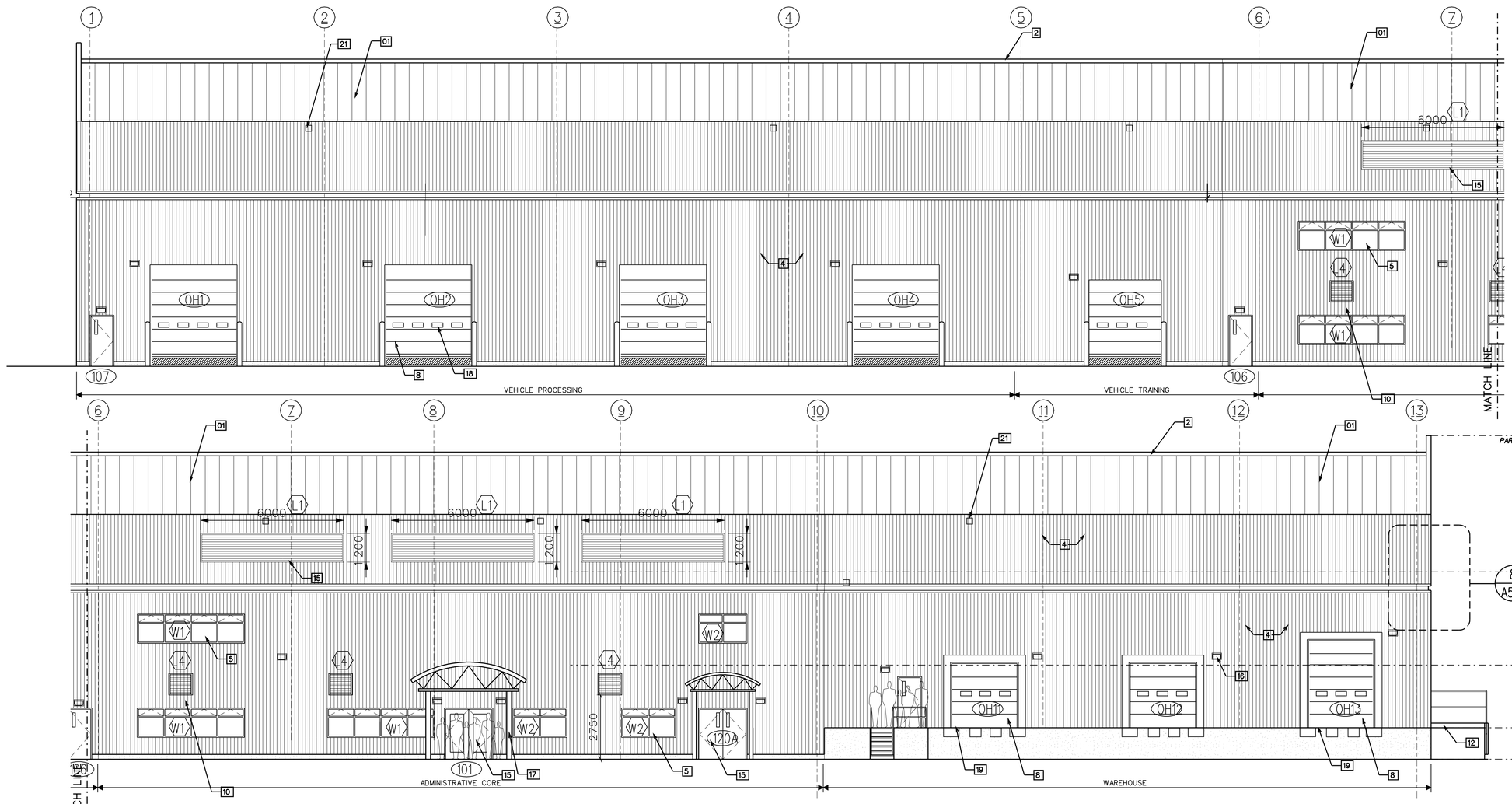

A A200 SOUTH ELEVATION
SCALE 1:100

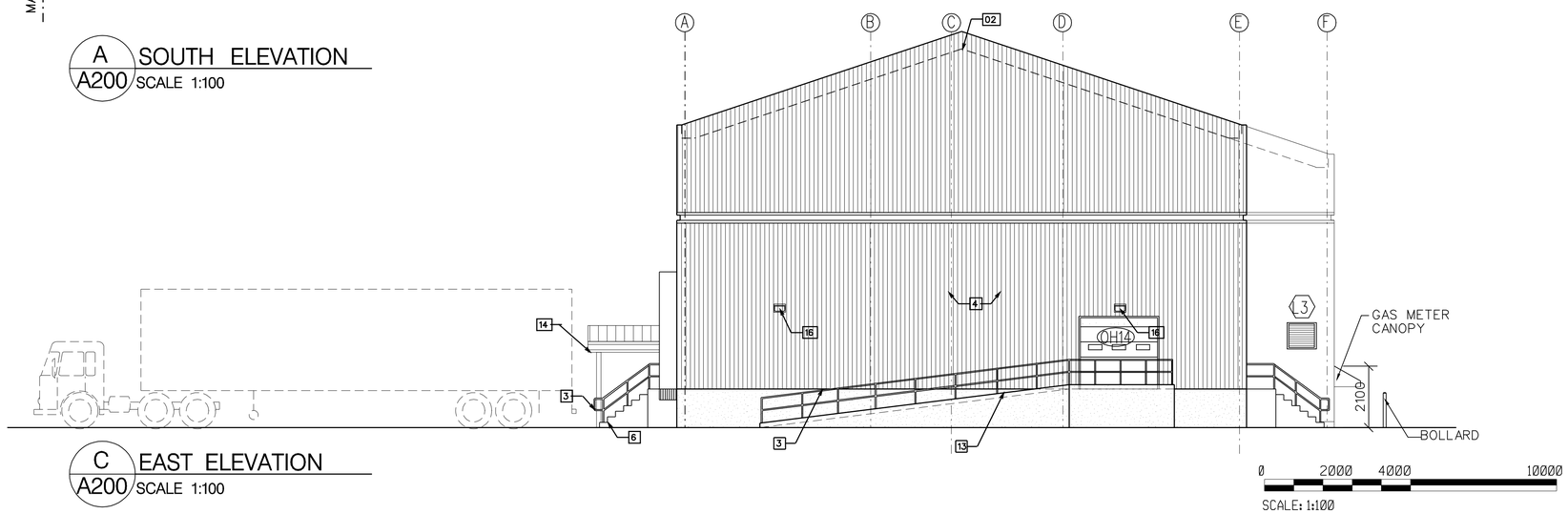

C A200 EAST ELEVATION
SCALE 1:100

GENERAL NOTES

1. FOR MATERIALS AND COLORS. SEE DRAWING A-201.

2. COLORS HERIN LISTED REFER TO MANUFACTURER'S DESIGNATION AND ARE NOT INTENDED TO LIMIT THE SELECTION OF MANUFACTURES TO THE ONE'S INDICATED.

3. THE COLORS INDICATED FOR THE METAL ROOFING AREAS ARE MANUFACTURED BY "PRECOAT METALS" WITH GLIDDEN NUBELAR COATING. THIS PREMIUM POLYVINYLIDENE FLOURIDE (PVF) COATING IS FORMULATED WITH KYNAR®500. THE COMPANY ADDRESS IS:
4301 SPRING AVENUE
ST. LOUIS, MISSOURI 63116
PHONE: (314) 352-8000

ALL DIMENSIONS ARE IN MILLIMETERS

US Army Corps of Engineers
New York District

Mark	Description	Date	Appr.

Designed by: | Date: | Size: 24x36
Dwn by: | Ckd by: | Solicitation no.:
Reviewed by: | Contract no.:
Submitted by: | Plot date: 09-AUG-2005 12:13 | Plot by: e3endnsh | Scale: 1:200000/1:50000
File name: S:\Manual military\Fort Drum\ForceMOD\Architectural\Force\057708_A-200xxx.dgn

U.S. ARMY ENGINEER DISTRICT
CORPS OF ENGINEERS
NEW YORK, NEW YORK

PN 57708
FORCE MODERNIZATION EDUCATION (TRANSITIONAL FACILITY)
FORT DRUM, NEW YORK

ELEVATIONS

Sheet reference number:
A–200

Submitted by: e3endnsh Plot Date: 09-AUG-2005 12:13
S:\fileroom\military\Fort Drum\ForceMOD\Architectural\Force\MOD57708_A-200xxx.dgn

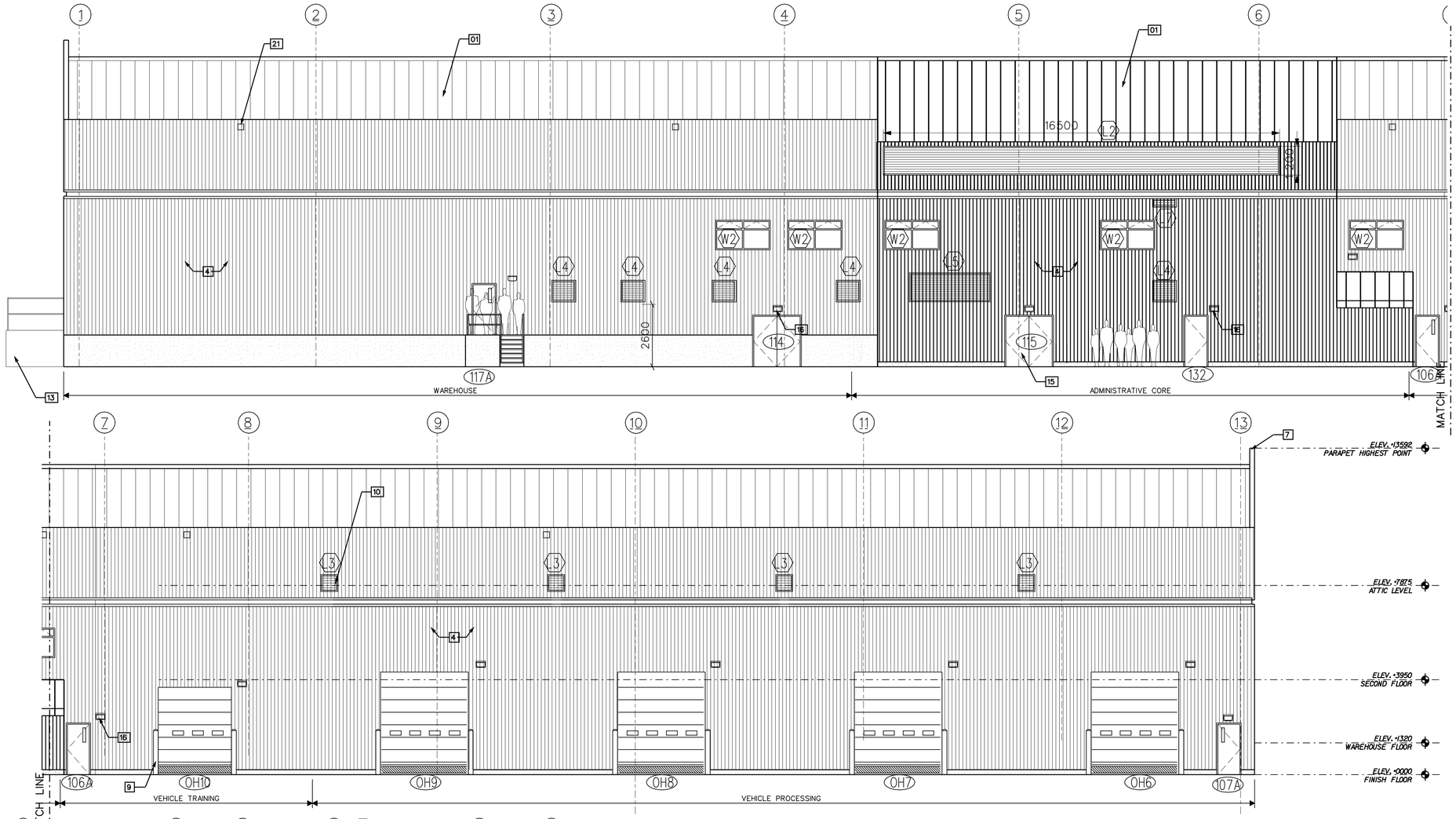

B A201 NORTH ELEVATION
SCALE 1:100

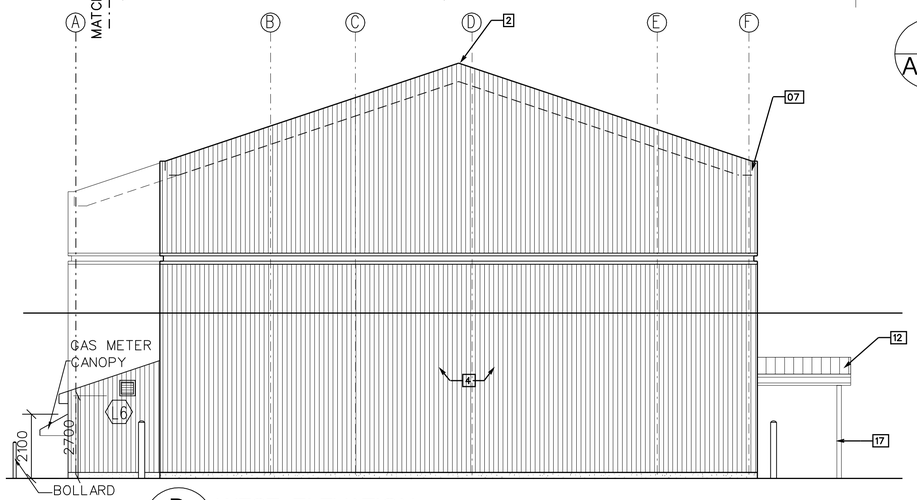

D A201 WEST ELEVATION
SCALE 1:100

0 2000 4000 10000
SCALE: 1:100

EXTERIOR COLORS & MATERIALS

1. STANDING SEAM METAL ROOF
   COLOR: SEAL BROWN NO. 618D474
2. RIDGE VENT
   COLOR SHALL MATCH STANDING SEAM METAL ROOF
3. METAL RAILINGS
4. METAL SIDING PANELS
   COLOR SHALL BE SURREY BEIGE NO.618L448
5. ALUMINUM WINDOWS
   COLOR: WINDOW FRAMES SHALL BE "OFF-WHITE" TO MATCH FEDERAL COLOR NO. 27886
6. CONCRETE & METAL STAIRS
7. METAL COPING
   COLOR SHALL MATCH STANDING SEAM METAL ROOF
8. OVERHEAD DOOR & LOADING TRUCK DOOR
   DOOR COLOR SHALL MATCH METAL SIDING PANELS.
9. BOLLARDS
   COLOR SHALL MATCH STANDING SEAM METAL ROOF WITH TOP SIX INCHES TO BE PAINTED FEDERAL HIGHWAY COLOR. "SAFETY YELLOW"
10. PREFINISHED ALUMINUM LOUVER
    COLOR SHALL MATCH METAL SIDING PANELS FOR LOCATIONS OF LOUVERS SEE MECHANICAL DRAWINGS
11. CHIMNEY
    COLOR SHALL MATCH STANDING SEAM METAL ROOF
12. STANDING SEAM METAL CANOPY
    COLOR SHALL MATCH STANDING SEAM METAL ROOF
13. FORKLIFT CONCRETE RAMP
14. MECHANICAL EQUIPMENT ACCESS DOOR
    COLOR SHALL MATCH METAL SIDING PANELS
15. EXTERIOR MET. DOOR, FRAMES & TRANSOMS
16. EXTERIOR WALL MOUNTED LIGHT FIXTURE
    FOR DETAILS SEE ELECTRICAL
17. 200 mm LOLLY COLUMNS
18. GLASS VISION LIGTHS
19. LOADING DOCK
20. 380mm DIA. PIPE. SEE MECHANICAL DWGS
21. GALV. METAL SCUPPER

ALL DIMENSIONS ARE IN MILLIMETERS

GENERAL NOTES

1. COLORS HERIN LISTED REFER TO MANUFACTURER'S DESIGNATION AND ARE NOT INTENDED TO LIMIT THE SELECTION OF MANUFACTURES TO THE ONE'S INDICATED.

2. THE COLORS INDICATED FOR THE METAL ROOFING AREAS ARE MANUFACTURED BY "PRECOAT METALS" WITH GLIDDEN NUBELAR COATING. THIS PREMIUM POLYVINYLIDENE FLOURIDE (PVF) COATING IS FORMULATED WITH KYNAR®500. THE COMPANY ADDRESS IS:

   4301 SPRING AVENUE
   ST. LOUIS, MISSOURI 63116
   PHONE: (314) 352-8000

3. METAL SIDING TRIM PIECE AROUND DOOR FRAMES AND WINDOWS FRAMES AT EXTERIOR OF BUILDING SHALL MATCH STANDING SEAM METAL ROOF.

4. EXTERIOR PERSONNEL DOORS AND DOOR FRAMES SHALL MATCH METAL SIDING COLOR, UNLESS OTHERWISE NOTED.

5. ALUMINUM STOREFRONT ENTRANCE DOOR NO.101 AND DOOR NO.102 SHALL HAVE "DURANODIC" DARK BRONZE FINISH TO MATCH STANDING SEAM METAL ROOF.

6. ALL HANDRAILS AT EXTERIOR STAIRS AND RAMPS SHALL BE COLORED TO MATCH STANDING SEAM METAL ROOF.

US Army Corps of Engineers
New York District

Mark	Description	Date	Appr.

U.S. ARMY ENGINEER DISTRICT
CORPS OF ENGINEERS
NEW YORK, NEW YORK

Designed by: | Date: | Date: 20 AUG 2005
Dwn by: | Ckd by: | Solicitation no.:
Reviewed by: | Contract no.:
Submitted by: | Plot date: 09-AUG-2005 12:14 | Plot by: | Scale: 1:200000/1:50000

File name: S:\Mission\military\fort Drum\FDX01\Architectural\Fxxx\D057708_A-20xxx.dgn

PN 57708
FORCE MODERNIZATION EDUCATION (TRANSITIONAL FACILITY)
FORT DRUM, NEW YORK

ELEVATIONS

Sheet reference number:
A–201

Submitted by: e3endnsh
S:\fileroom\military\Fort Drum\ForceMOD\Architectural\ForceMOD57708_A-20lxxx.dgn
Plot Date: 09-AUG-2005 12:14

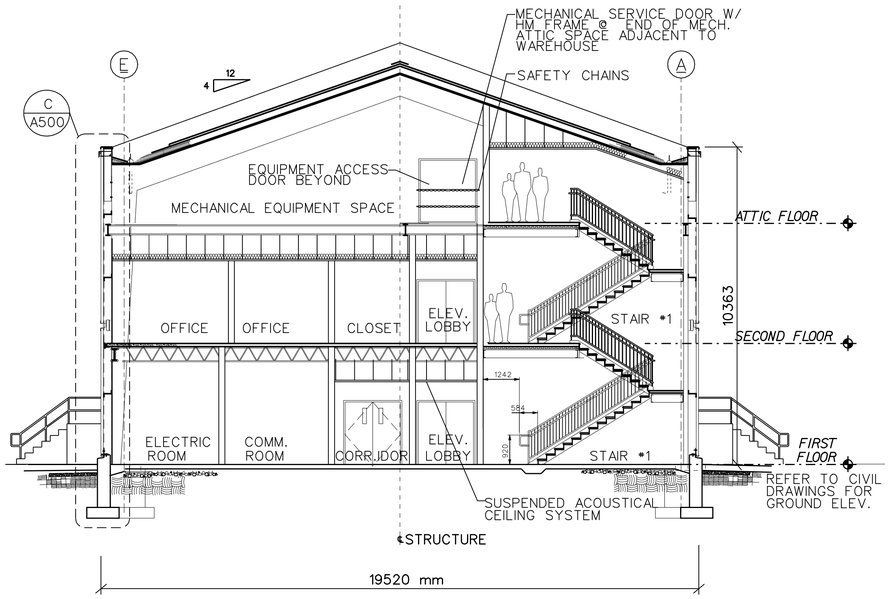

1 A300 SECTION
SCALE 1:100

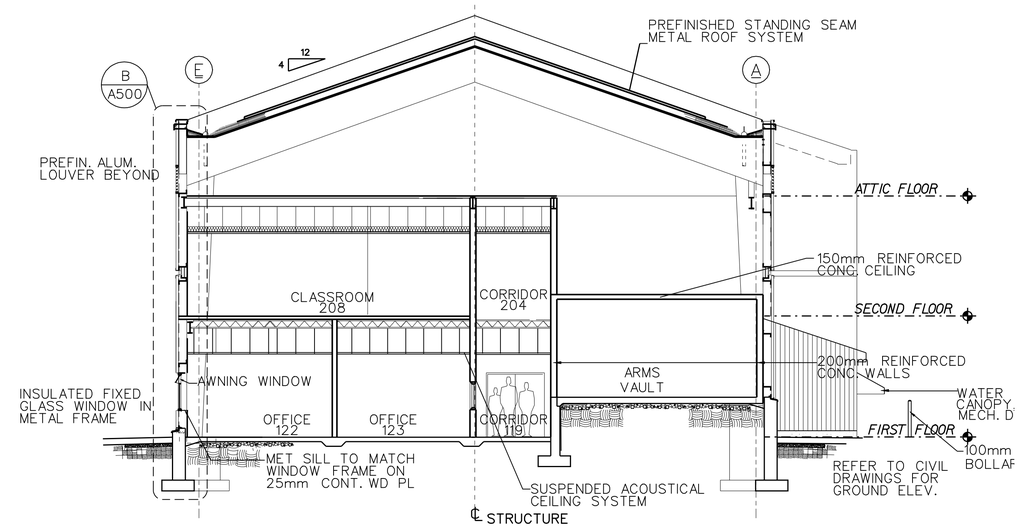

3 A300 SECTION
SCALE 1:100

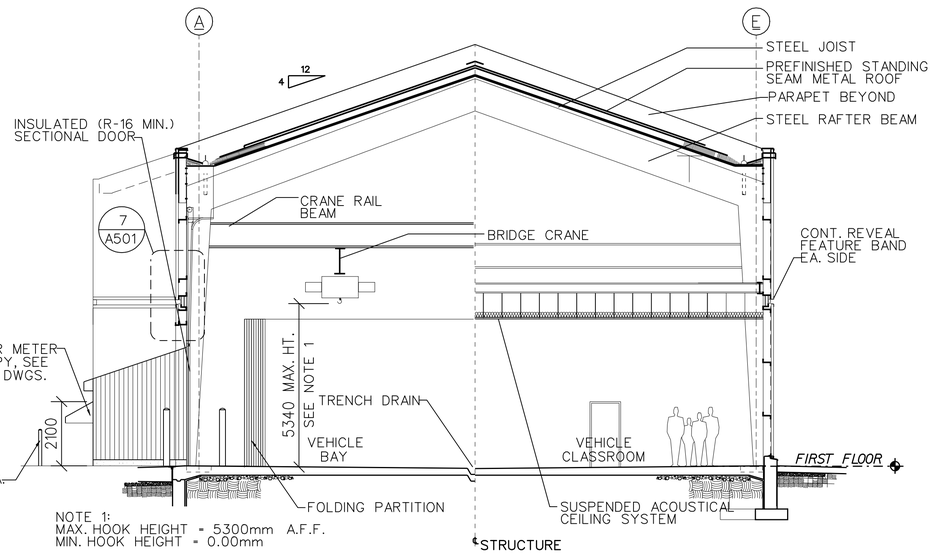

2 A300 SECTION
SCALE 1:100

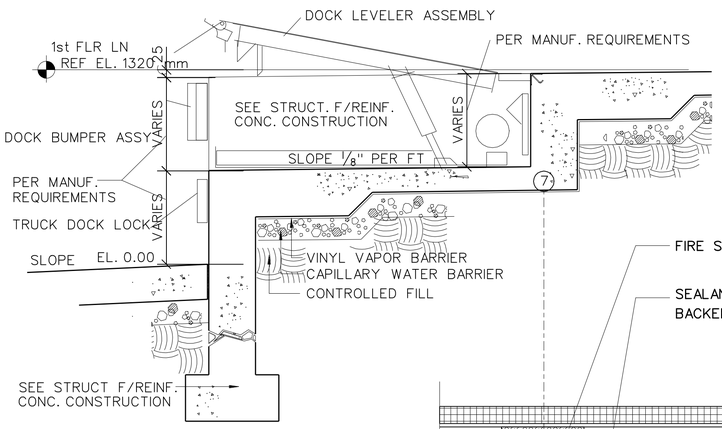

1A A300 LOADING DOCK SECTION
SCALE 1:10

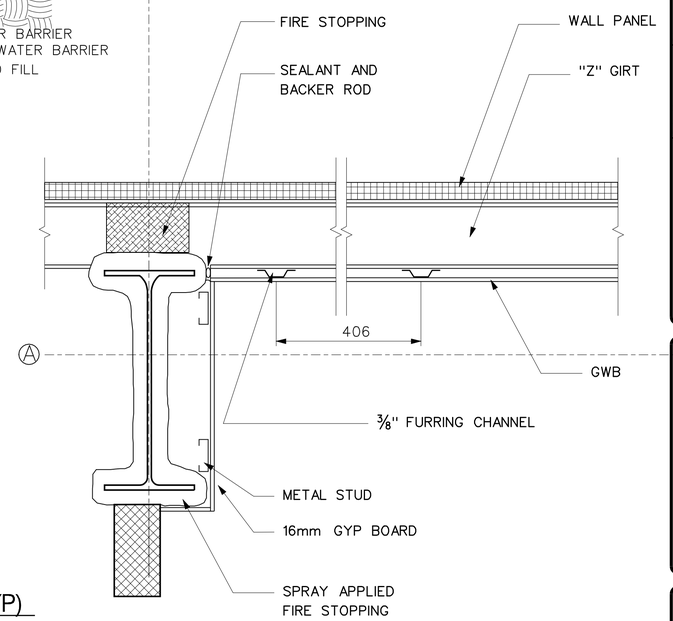

2A A300 FIRESTOPPING DETAIL (TYP)
SCALE 1:10

ALL DIMENSIONS ARE IN MILLIMETERS

US Army Corps of Engineers
New York District

Mark	Description	Date	Appr.

U.S. ARMY ENGINEER DISTRICT
CORPS OF ENGINEERS
NEW YORK, NEW YORK

Designed by: | Date: | Date: 20 AUG 2004
Dwn by: | Ckd by: | Solicitation no.:
Reviewed by: | Contract no.:
Submitted by: | Plot date: 09-AUG-2005 12:14 | Plot scale: 1 | Size: 1200000/1000000

File name: S:\Mission\Military\Fort Drum\FortDrum\Architectural\Forced\D057708_A-300xxx.dgn

FORCE MODERNIZATION EDUCATION (TRANSITIONAL FACILITY)
FORT DRUM, NEW YORK

PN 57708

SECTIONS

Sheet reference number:
A–300

Plot Date: 09-AUG-2005 12:14
Submitted by: e3endnsh
S:\fileroom\military\Fort DrumFortDrumArchitecturalforceMOD057708_A-300xxx.dgn

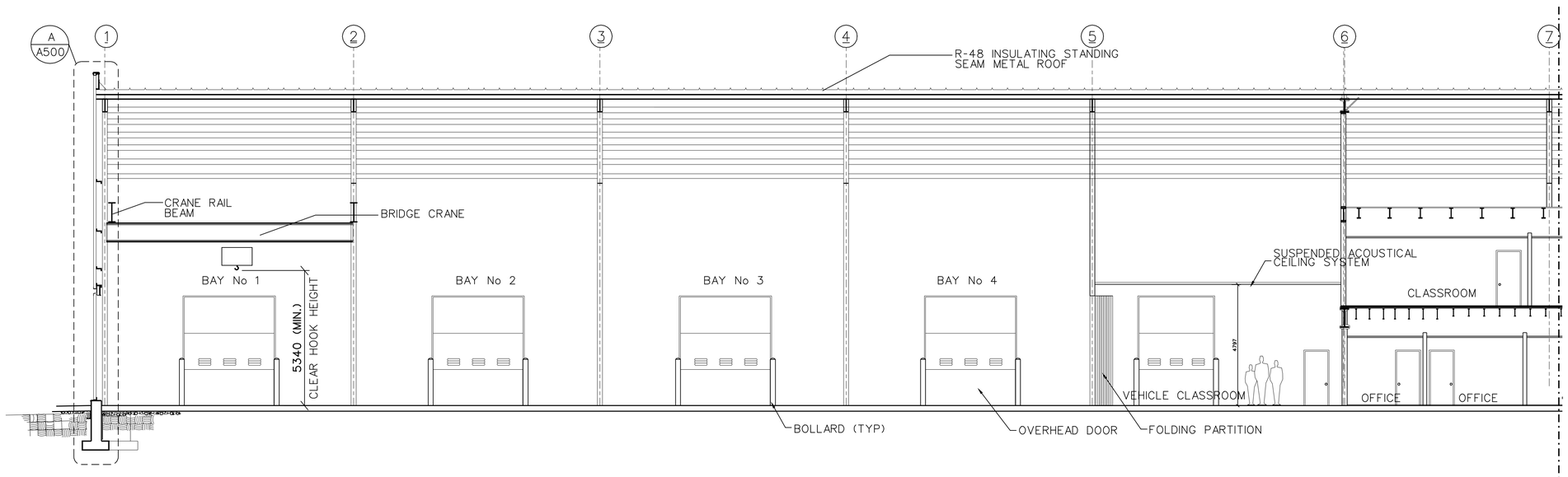

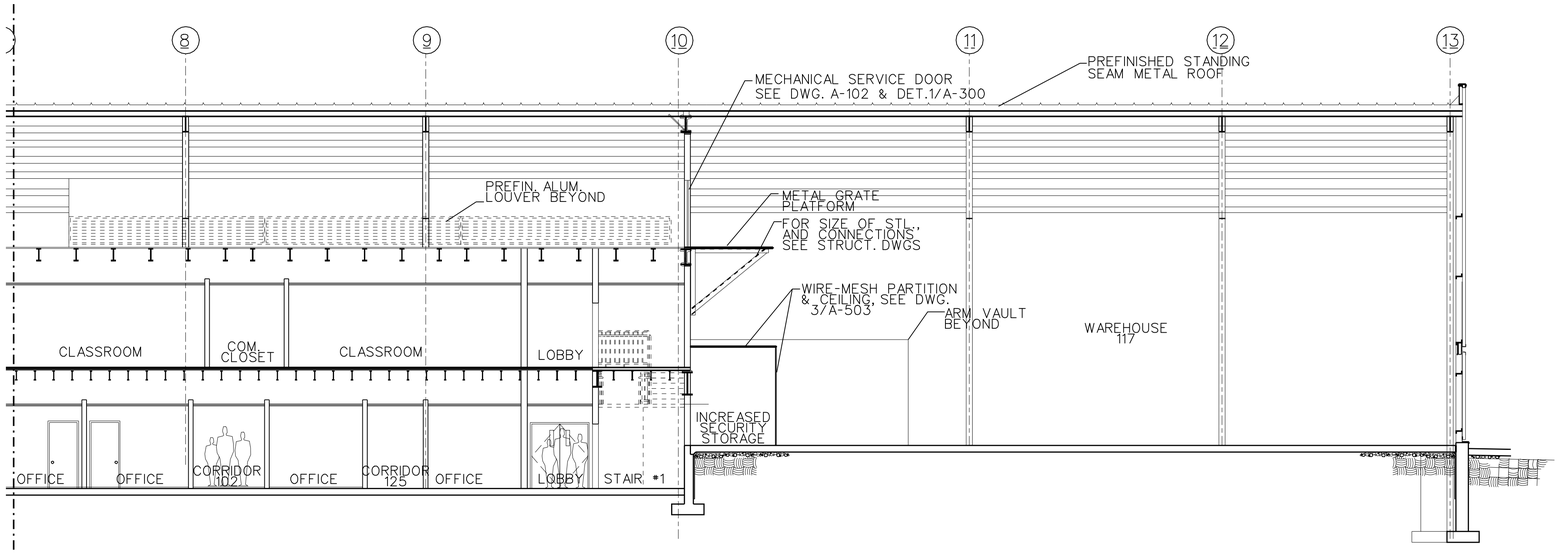

4 A301 LONGITUDINAL SECTION
SCALE 1:100

ALL DIMENSIONS ARE IN MILLIMETERS

US Army Corps of Engineers
New York District

Mark	Description	Date	Appr.

Designed by: Date: Title as:
Dwn by: Ckd by: Solicitation no.:
Reviewed by: Contract no.:
Submitted by: File date: 09-AUG-2005 12:14 File: A-301.dgn Scale: 1:100/01:100/00
Rev. date:
U.S. ARMY ENGINEER DISTRICT
CORPS OF ENGINEERS
NEW YORK, NEW YORK
Dgn name: S:\Room\military\for Drum\FortDrum\Architectural\Plans\D057708_A-301xxx.dgn

PN 57708
FORCE MODERNIZATION EDUCATION/ TRANSITIONAL FACILITY
FORT DRUM, NEW YORK

LONGITUDINAL SECTION

Sheet reference number:
A–301

Submitted by: e3endnsh
S:\fileroom\military\Fort Drum\ForceMOD\Architectural\ForceMOD57708_A-301xxx.dgn
Plot Date: 09-AUG-2005 12:14

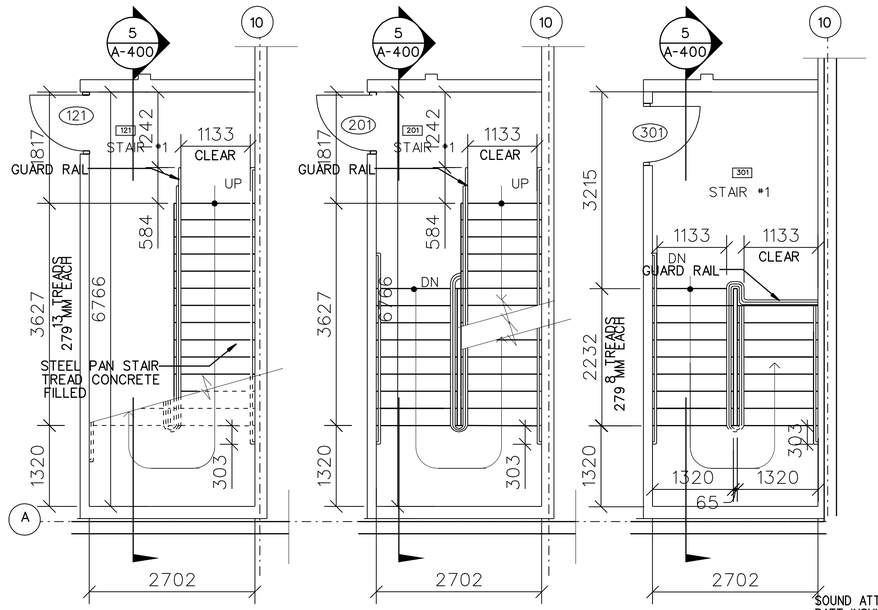

1 STAIR No 1 FIRST FLOOR PLAN
A400 SCALE 1:50

2 STAIR No 1 2nd FLOOR PLAN
A400 SCALE 1:50

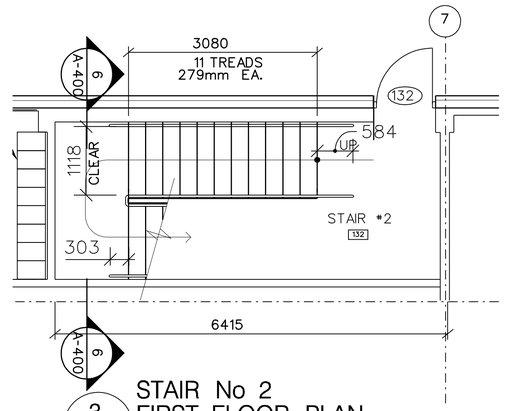

3 STAIR No 2 FIRST FLOOR PLAN
A400 SCALE 1:50

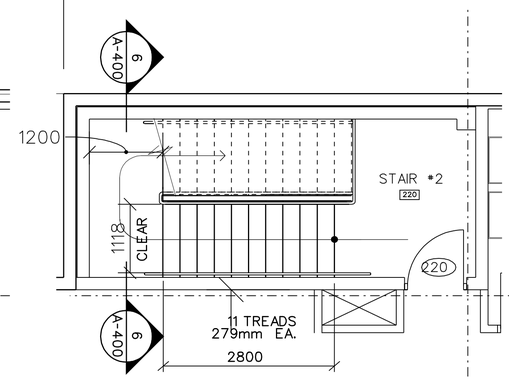

4 STAIR No 2 2nd FLOOR PLAN
A400 SCALE 1:50

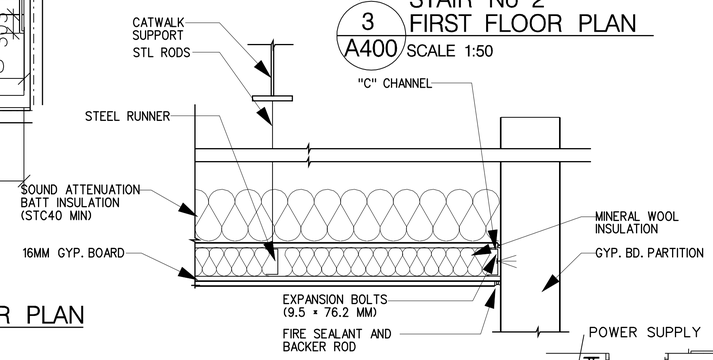

6A 1 HR FIRE RATED CLOSURE @ TOP OF STAIRWELL
A400 SCALE 1:20

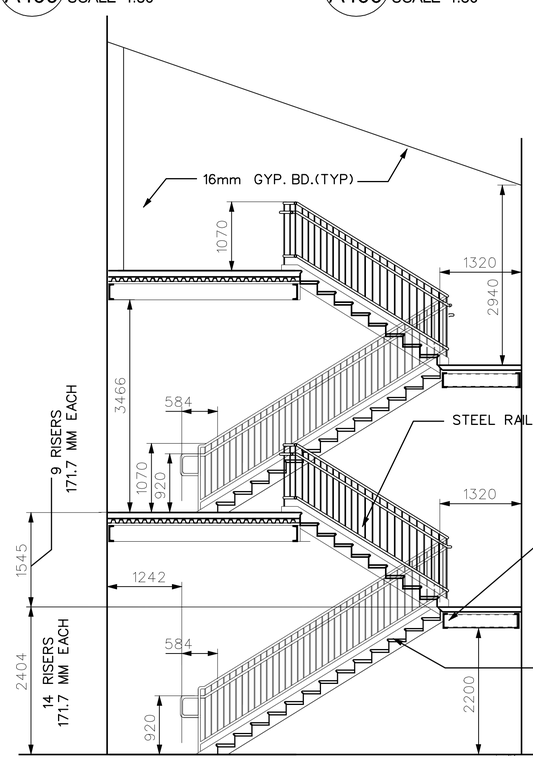

5 STAIR No 1– SECTION
A400 SCALE 1:50

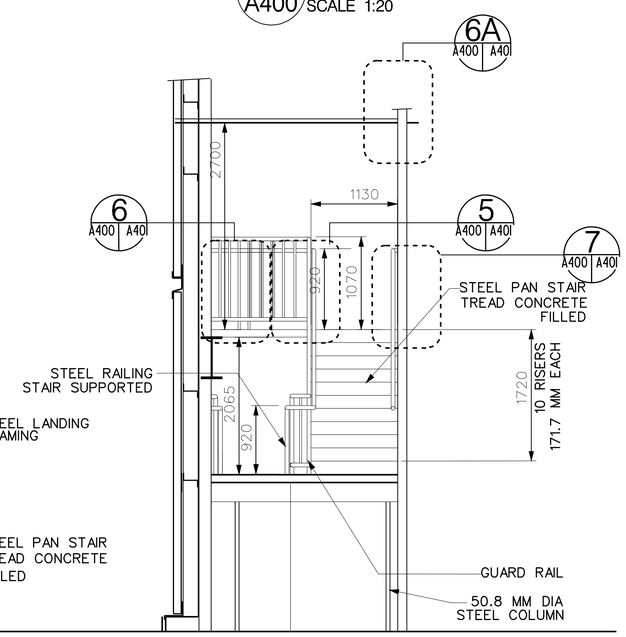

6 STAIR No 2– SECTION
A400 SCALE 1:50

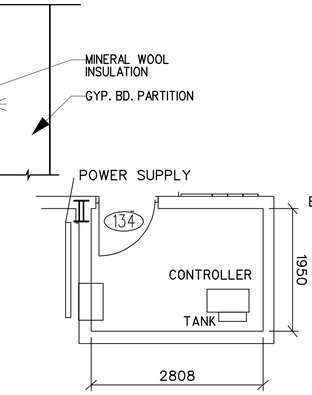

7B MACHINE RM. FL. PLAN
A400 SCALE N.T.S.

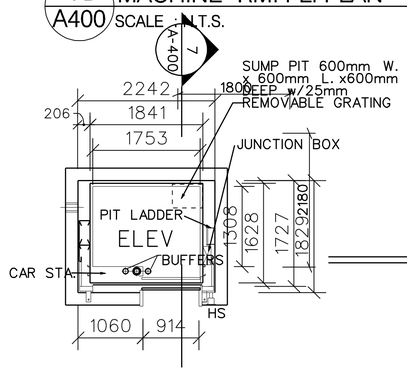

7A ELEVATOR FLOOR PLAN
A400 SCALE 1:50

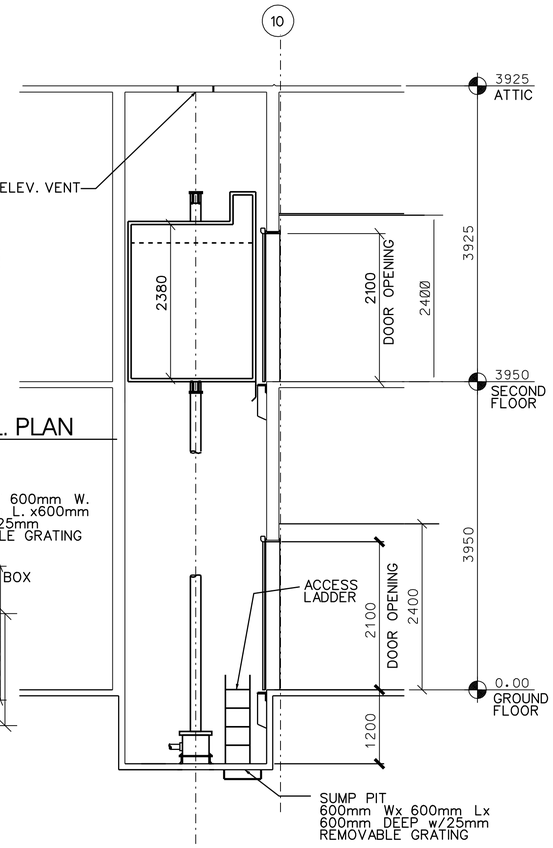

7 ELEVATOR – SECTION
A400 SCALE 1:50

ALL DIMENSIONS ARE IN MILLIMETERS

US Army Corps of Engineers
New York District

Mark	Description	Date	Appr.

Designed by: | Date: | Size: | Scale:
Dwn by: | Ckd by: | Solicitation no.:
Reviewed by: | Contract no.:
Submitted by: | File name: S:\flierroom\military\fort drum\ForceMOD\Architectural\Architectural\Formats\D1708_A-400xxx.dgn | Plot date: 09-AUG-2005 12:14 | Plot by: e3endsh | Scale: 1:00000/1:00000

U.S. ARMY ENGINEER DISTRICT
CORPS OF ENGINEERS
NEW YORK, NEW YORK

PN 57708
FORCE MODERNIZATION EDUCATION /TRANSITIONAL FACILITY
FORT DRUM, NEW YORK

STAIRS ENLARGED PLANS & SECTIONS

Sheet reference number:
A–400

Submitted by: e3endsh
S:\flierroom\military\fort DrumØForceMODØArchitecturalØforceMOD57708_A-400xxx.dgn
Plot Date: 09-AUG-2005 12:14

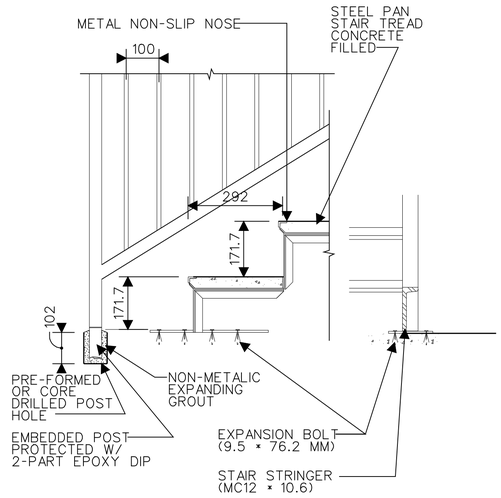

1 A401 STAIR DETAIL
SCALE 1:10

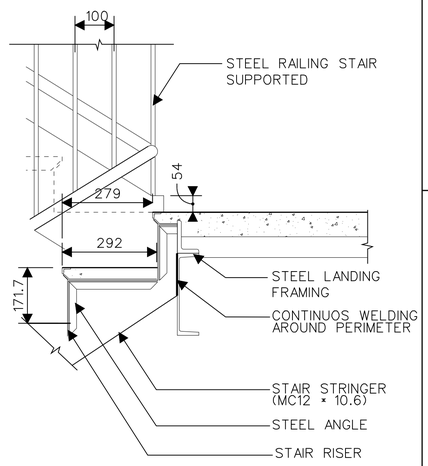

2 A401 STAIR DETAIL
SCALE 1:10

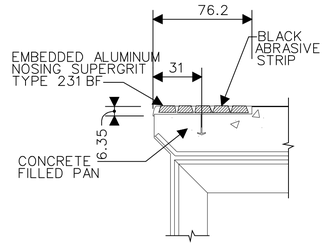

3A A401 STAIR DETAIL
SCALE 1:10

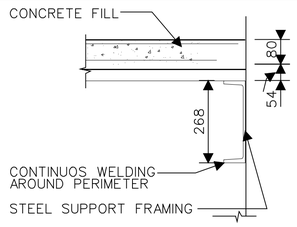

3 A401 STAIR DETAIL
SCALE 1:10

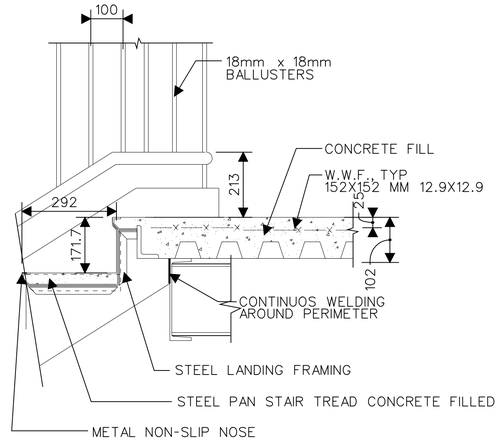

4 A401 STAIR DETAIL
SCALE 1:10

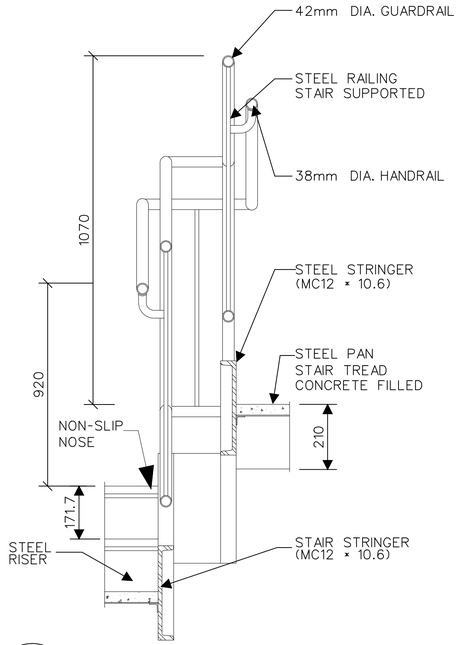

5 A401 STAIR DETAIL
SCALE 1:10

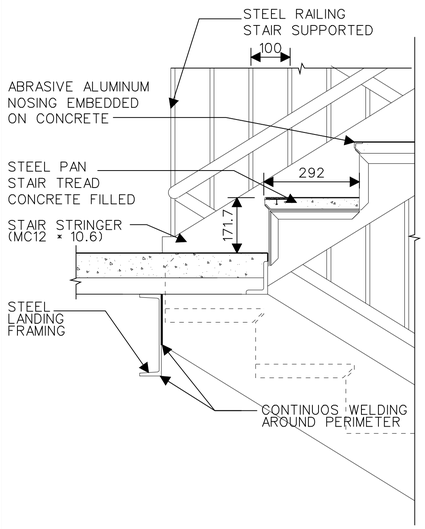

6 A401 STAIR DETAIL
SCALE 1:10

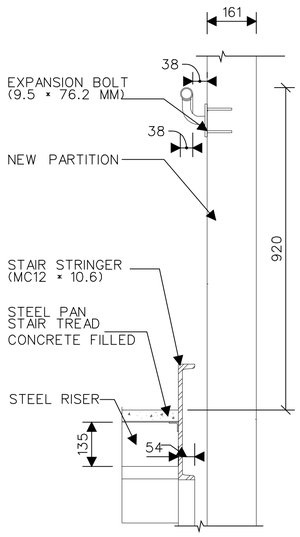

7 A401 STAIR DETAIL
SCALE 1:10

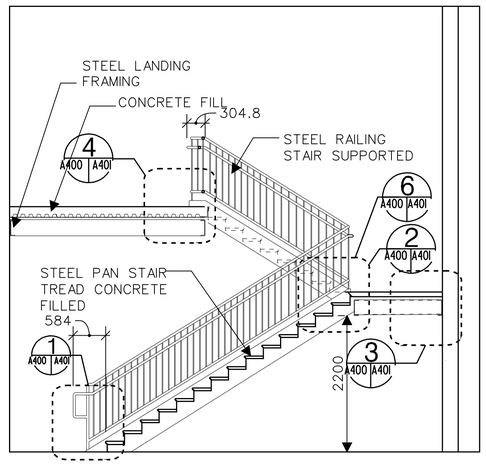

NOTES:

1. STAIR FINISHES SHALL BE VCT IN ADJACENT FLOOR AREAS, AND EPOXY, WITH NON-SLIP SEALER ON TREADS.

8 A401 STAIR DETAIL
SCALE 1:50

ALL DIMENSIONS ARE SHOWN IN MILLIMETERS

US Army Corps of Engineers
New York District

Mark	Description	Date	Appr.

U.S. ARMY ENGINEER DISTRICT
CORPS OF ENGINEERS
NEW YORK, NEW YORK

Designed by: | Date: | Sheet no.:
Dwn by: | Ckd by: | Solicitation no.:
Reviewed by: | Contract no.:
Submitted by: | Plot date: 09-AUG-2005 12:14 | Plot by: e3endnsh | Scale: 1:200/01:100/000
File name: S:\filer-oom\military\Fort Drum\ForceMOD\Architectural\Forms\ACD\PN_A-401xxx.dgn

PN 57708
FORCE MODERNIZATION EDUCATION / TRANSITIONAL FACILITY
FORT DRUM, NEW YORK

STAIRS DETAILS

Sheet reference number:
A–401

Submitted by: e3endnsh
S:\filer-oom\military\Fort Drum\ForceMOD\Architectural\ForceMOD057708_A-401xxx.dgn
Plot Date: 09-AUG-2005 12:14

EXTERIOR STAIR NOTES:

1. ALL EXIST GRADES SHALL BE VERIFIED IN FIELD PRIOR TO FURNISHING SHOP DWGS. SEE CIVIL DWGS FOR ALL FINISHED GRADES, ETC. TO DETERMINE THE EXACT NUMBER OF TREADS AND RISERS REQUIRED. RISERS ON EACH STAIRCASE SHALL BE EQUAL WITH A 5" Min, 7" Max. HEIGHT.
2. SLOPE ALL PLATFORMS & TREADS AWAY FROM BLDG LINE FOR DRAINAGE 1/8 " PER FT
3. 2" O.D. HANDRAILS & POSTS WITH 1" O.D. MET PIPE BALUSTRADE AS SHOWN. WELD ALL CONNECTIONS ARE GRIND SMOOTH.
4. ALL EXTERIOR RAILINGS AND HANDRAILS SHALL BE CLEAR ANODIZED ALUMINUM (TYP).
5. EXTERIOR CONCRETE STAIR NOSING SHALL BE 3" WIDE EXTRUDED ALUMINUM BASE WITH INTEGRAL CONTINUOUS EXTRUDED ANCHOR WITH ALUMINUM OXIDE FILLER STRIPS.

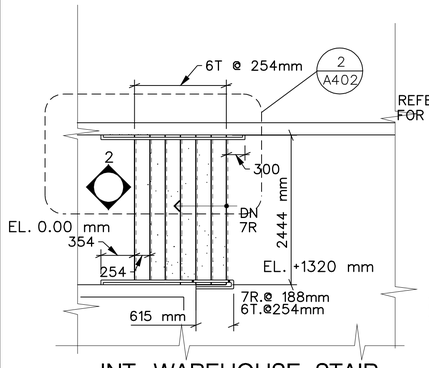

1 INT.–WAREHOUSE STAIR–FLOOR PLAN
A101 A402 SCALE: 1:50

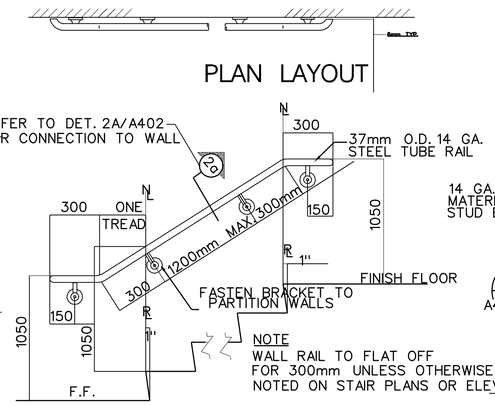

2 TYP. WALL RAILING
A402 A402 SCALE: 1:50

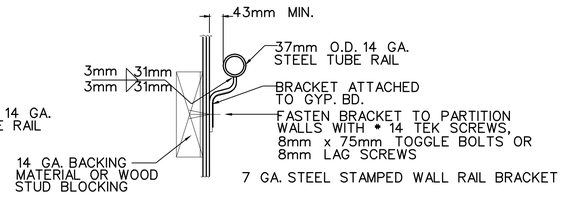

2A CONNECTION DETAIL FOR PARTITION & STUD WALLS
A402 A402 SCALE: N.T.S.

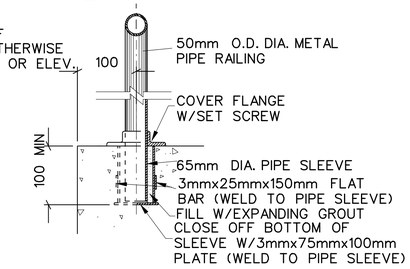

2 RAILING DETAIL
A402 A402 SCALE: 1:10

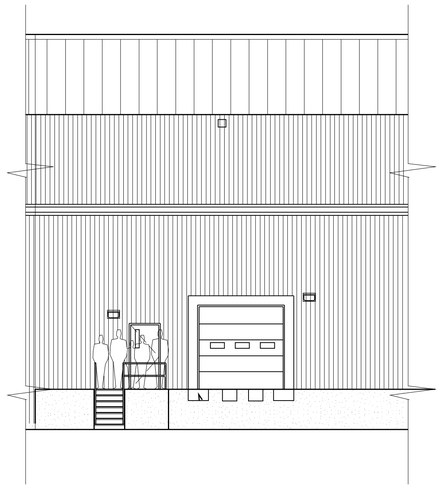

7 EXTERIOR STAIR FRONT ELEVATION
A200 A402 SCALE: 1:100

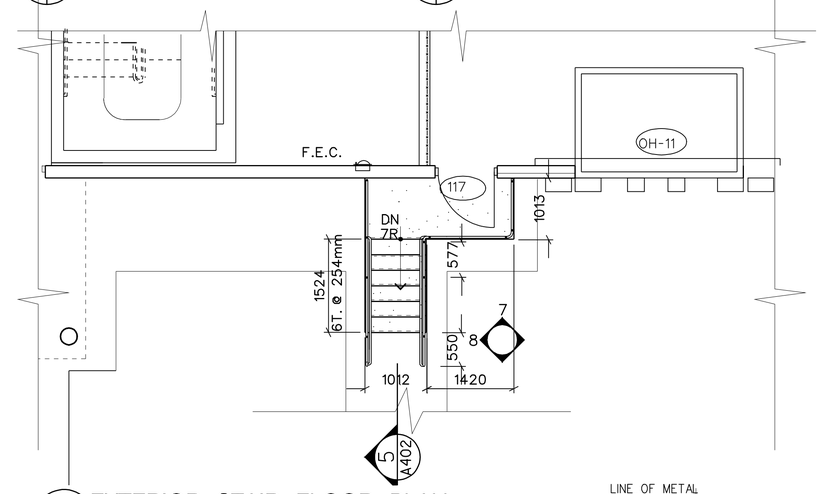

4 EXTERIOR STAIR FLOOR PLAN
A101 A402 SCALE: 1:50

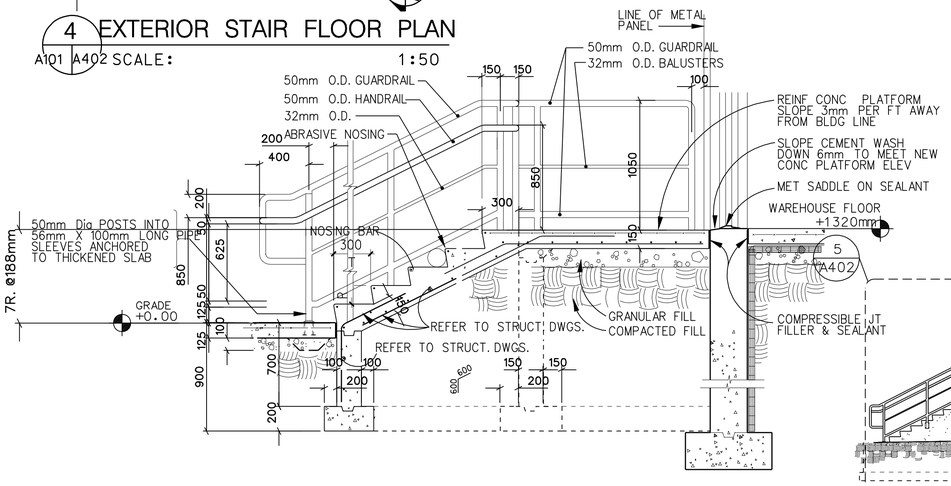

5 EXTERIOR STAIR DETAIL
A402 A402 SCALE: 1:20

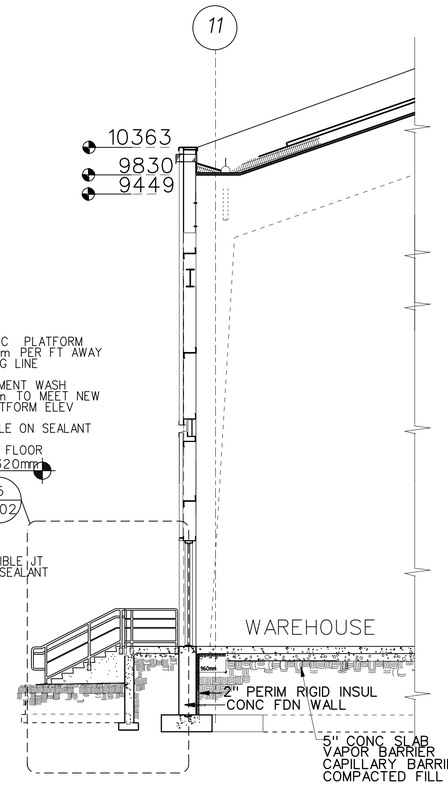

2 EXTERIOR STAIR SECTION
A402 A402 SCALE: 1:100

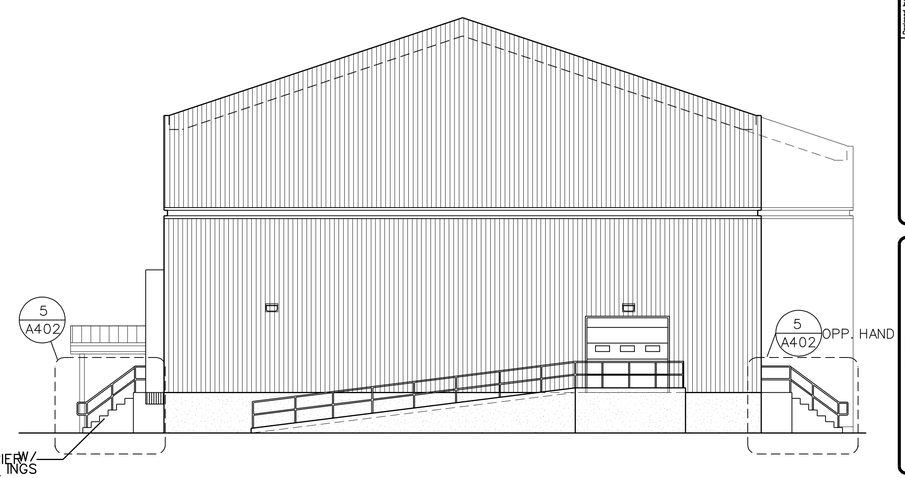

8 EXTERIOR STAIRS ELEVATION
A200 A402 SCALE: 1:100

ALL DIMENSIONS ARE SHOWN IN MILLIMETERS

US Army Corps of Engineers
New York District

Mark	Description	Date	Appr.	Mark	Description	Date	Appr.

U.S. ARMY ENGINEER DISTRICT
CORPS OF ENGINEERS
NEW YORK, NEW YORK

Designed by: | Date: | Job No.
Dwn by: | Ckd by: | Solicitation no.:
Reviewed by: | Contract no.:
Submitted by: | Plot date: 09-AUG-2005 12:14 | Plot scale: 1 | Size: 1200X1200000
File name: S:\Barnum Valley Fed Court Facility\Architectural Facility\Drawing A-402xxx.dgn

FORCE MODERNIZATION EDUCATION (TRANSITIONAL FACILITY) FORT DRUM, NEW YORK
PN 5709

ENLARGED INT. & EXT. STAIRS SECTIONS & DETAILS

Sheet reference number:
A–402

Submitted by: e3endnsh
S:\filer-oom\military\Fort Drum\ForceMOD\Architectural\ForceMOD57708_A-402xxx.dgn
Plot Date: 09-AUG-2005 12:14

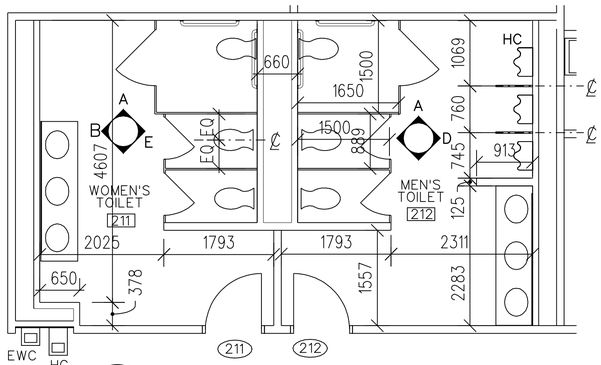

1 ENLARGED TOILET FLOOR PLAN
A101 A403 SCALE: 1:50

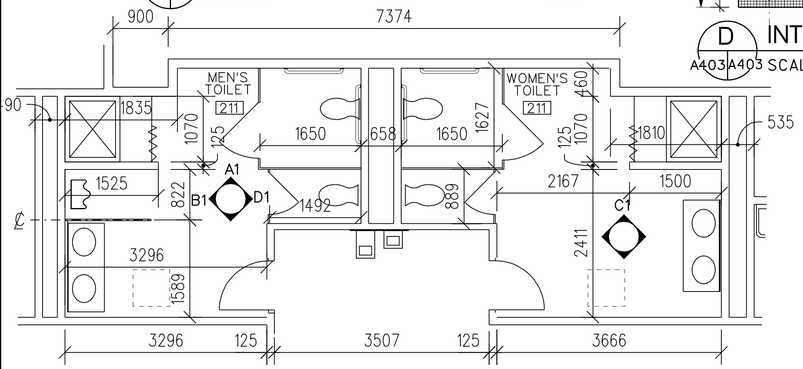

2 ENLARGED TOILET FLOOR PLAN
A101 A403 SCALE: 1:50

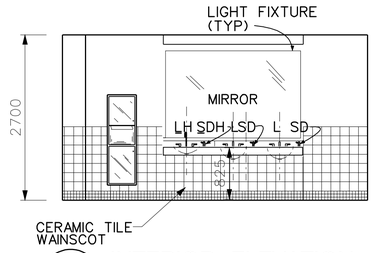

B INTERIOR ELELEVATION
A403 A403 SCALE: 1:50

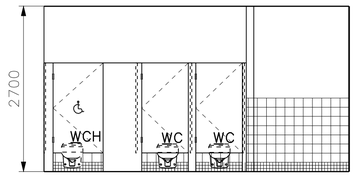

E INTERIOR ELEVATION
A403 A403 SCALE: 1:50

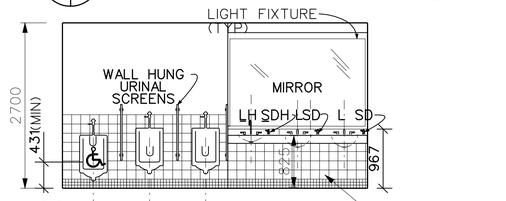

D INTERIOR ELEVATION
A403 A403 SCALE: 1:50

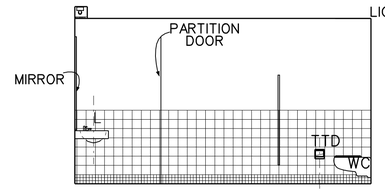

A1 INTERIOR ELEVATION
A403 A403 SCALE: 1:50

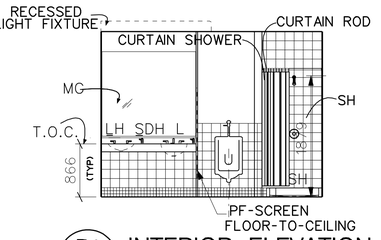

B1 INTERIOR ELEVATION
A403 A403 SCALE: 1:50

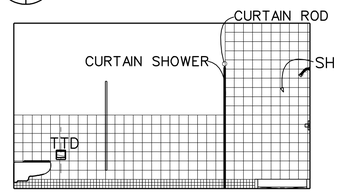

C1 INTERIOR ELEVATION
A403 A403 SCALE: 1:50

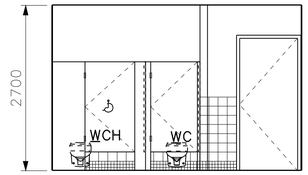

D1 INTERIOR ELEVATION
A403 A403 SCALE: 1:50

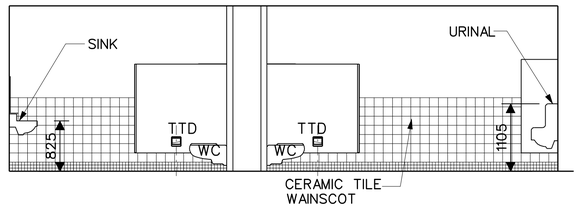

A INTERIOR ELEVATION
A403 A403 SCALE: 1:50

LEGEND FOR ABBREVIATIONS

BH	BUMPER HOOK
CT	CERAMIC TILE
L	LAVATORY
U	URINAL
SH	SHOWER
WC	WATER CLOSET
FD	FLOOR DRAIN
GB	GRAB BAR
LH	LAVATORY HANDICAPPED
PTD	PAPER TOWEL DISPENSER
MG	MIRROR GLASS
SD	SOAP DISPENSER (DECK MOUNTED)
SDH	SOAP DISPENSER HANDICAPPED (DECK MOUNTED)
SND	SANITARY NAPKIN DISPOSAL
SS	SERVICE SINK
TP	TOWEL PIN
TTD	TOILET TISSUE DISPENSER
WCH	WATER CLOSET HANDICAPPED
PTDHC	PAPER TOWEL DISP/RECEPTOR HANDICAPPED

NOTES: ALL EQUIPMENT FOR HANDICAPPED TO FOLLOW ADA REQUIREMENTS.

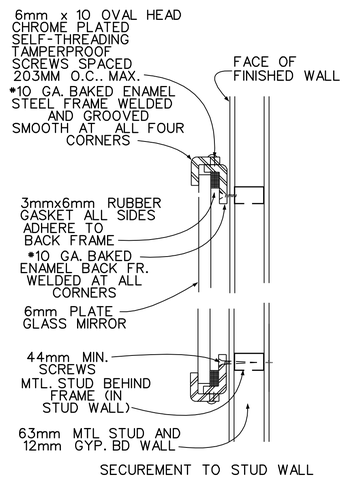

TYP. MIRROR DETAILS
NOT TO SCALE

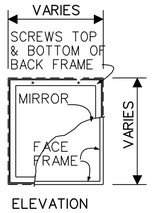

TYP. MIRROR DETAILS
NOT TO SCALE

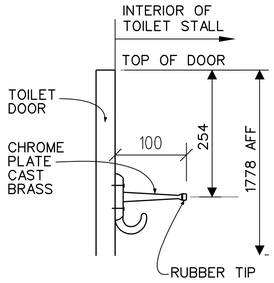

BUMPER HOOK
NOT TO SCALE

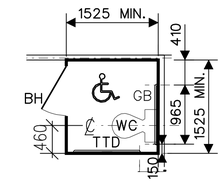

HC TOILET STALL (TYP)
SCALE: 1:50

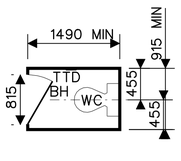

TOILET STALL (TYP)
SCALE: 1:50

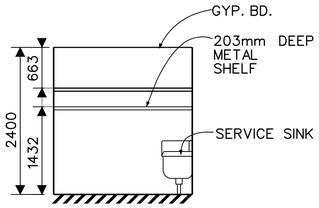

ELEV. JANITOR'S CLOSET TYP.
SCALE: 1:50

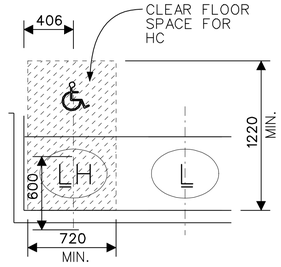

CLEAR FLOOR SPACE @ LAVATORIES (TYP)
SCALE: 1:25

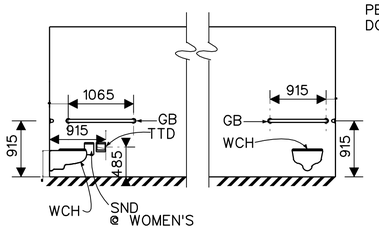

TYP. HANDICAP'D STALL ELEV.
SCALE: 1:50

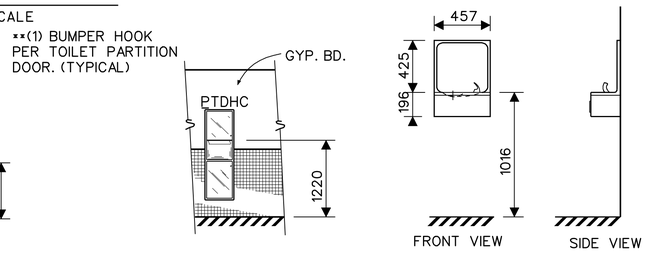

PAPER TOWEL DISPENSER RECEPTOR HANDICAPPED
SCALE: 1:50

WATER COOLER FOUNTAIN (TYP)
SCALE: 1:25

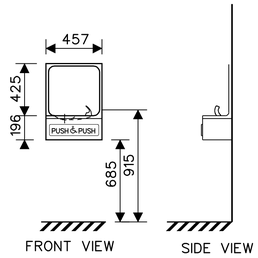

HC WATER COOLER FOUNTAIN (TYP)
SCALE:1:25

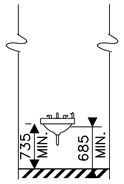

LAVATORY
SCALE:1:25

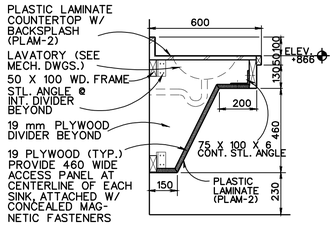

LAVATORY
SCALE:NTS

ALL DIMENSIONS ARE SHOWN IN MILLIMETERS

US Army Corps of Engineers
New York District

U.S. ARMY ENGINEER DISTRICT
CORPS OF ENGINEERS
NEW YORK, NEW YORK

PN 57708
FORCE MODERNIZATION EDUCATION (TRANSITIONAL FACILITY)
FORT DRUM, NEW YORK

ENLARGED TOILET FLOOR PLANS & DETAILS

Sheet reference number: A–403

Submitted by: e3endnsh
S:\ftfloorom\military\Fort Drum\MOD\Architectural\ForceMOD57708_A-403xxx.dgn
Plot Date: 09-AUG-2005 12:14

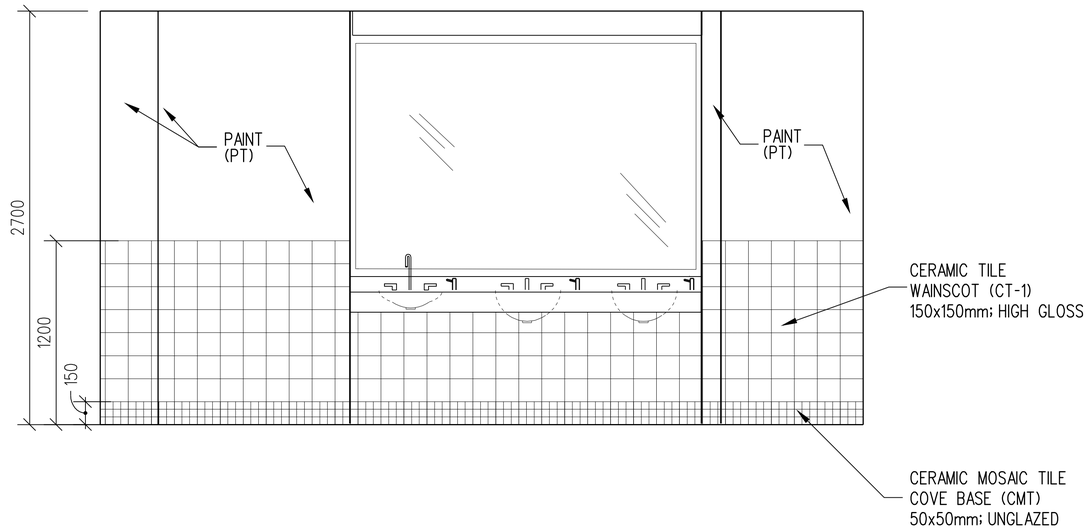

A TYPICAL CERAMIC TILE LAYOUT
SCALE 1:20

NOTE:
REFER TO FINISH SCHEDULE AND INTERIOR ELEVATIONS ON DWG. A-403

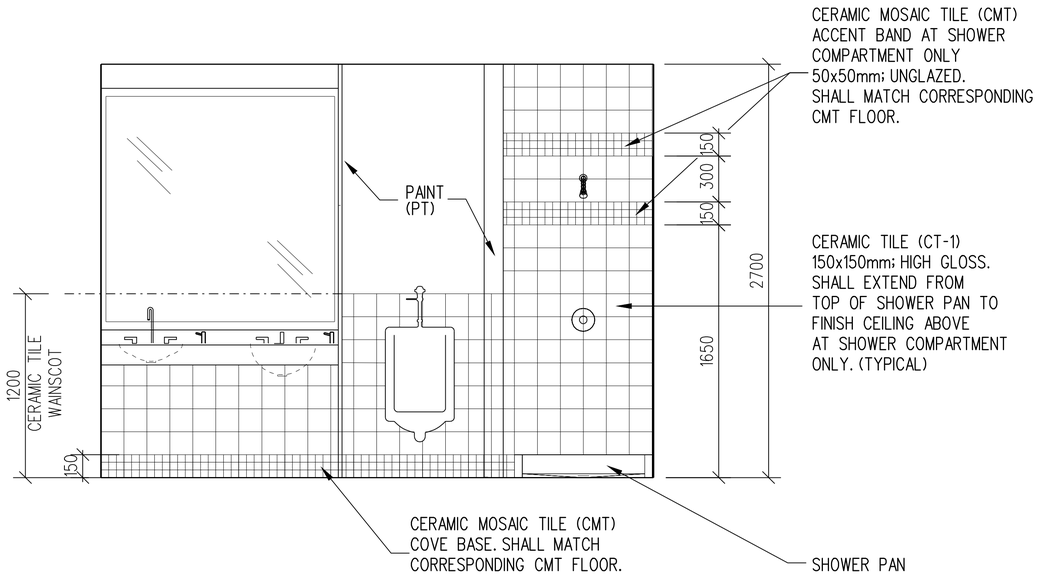

B TYPICAL CERAMIC TILE LAYOUT
SCALE 1:20

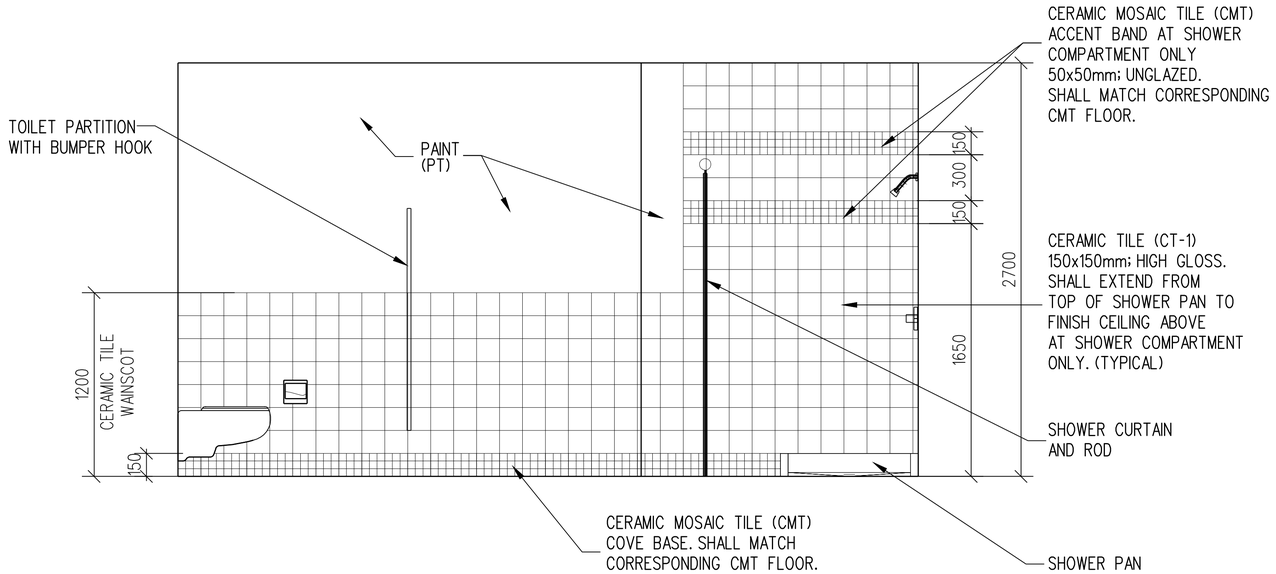

C TYPICAL CERAMIC TILE LAYOUT
SCALE 1:20

ALL DIMENSIONS ARE IN MILLIMETERS

US Army Corps of Engineers
New York District

U.S. ARMY ENGINEER DISTRICT
CORPS OF ENGINEERS
NEW YORK, NEW YORK

PN 57708
FORCE MODERNIZATION EDUCATION /TRANSITIONAL FACILITY
FORT DRUM, NEW YORK

CERAMIC TILE LAYOUT

Sheet reference number:
A-403A

Submitted by: e3endnsh Plot Date: 09-AUG-2005 12:15
S:\fileroom\military\Fort Drum\ForceMOD\Architectural\ForceMOD57708_A-403Axx.dgn

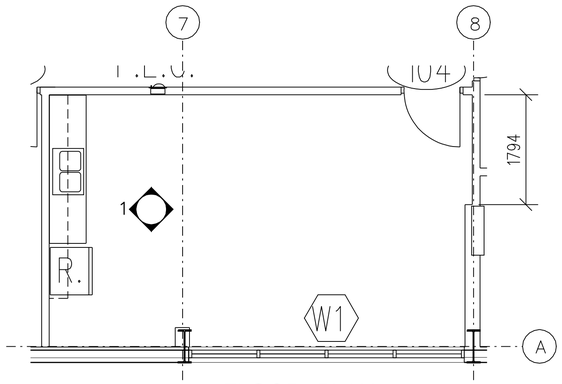

1 A404 FLOOR PLAN BREAK ROOM 104
SCALE 1:50

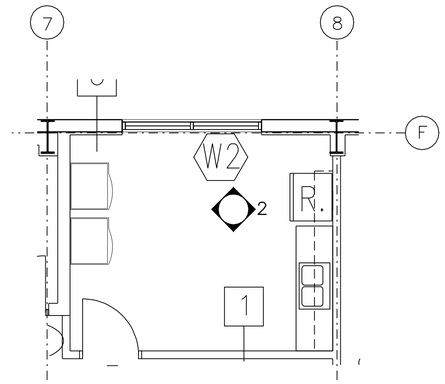

2 A404 FLOOR PLAN BREAK ROOM 219
SCALE 1:50

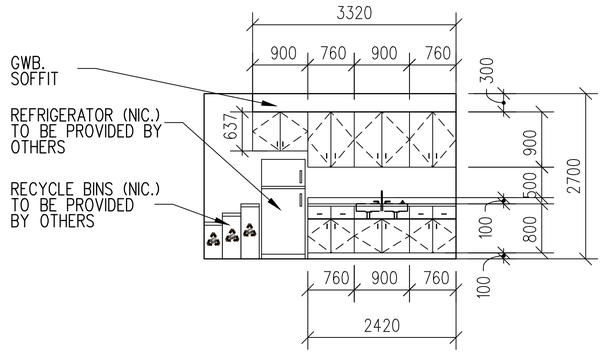

1 A404 ELEVATION BREAK ROOM 104
SCALE 1:50

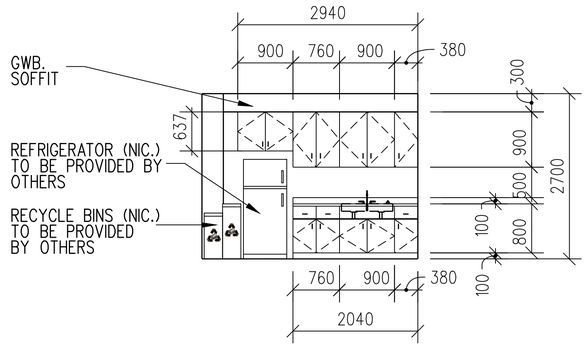

2 A404 ELEVATION BREAK ROOM 219
SCALE 1:50

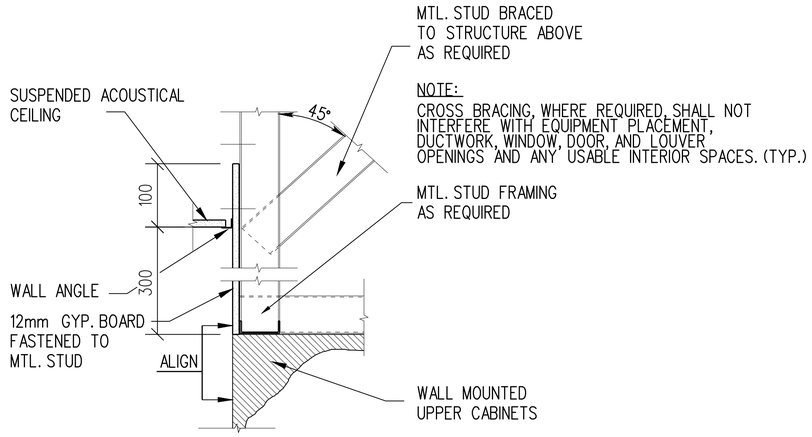

NOTE:
CROSS BRACING, WHERE REQUIRED, SHALL NOT INTERFERE WITH EQUIPMENT PLACEMENT, DUCTWORK, WINDOW, DOOR, AND LOUVER OPENINGS AND ANY USABLE INTERIOR SPACES. (TYP.)

B A404 SOFFIT DETAIL
NOT TO SCALE

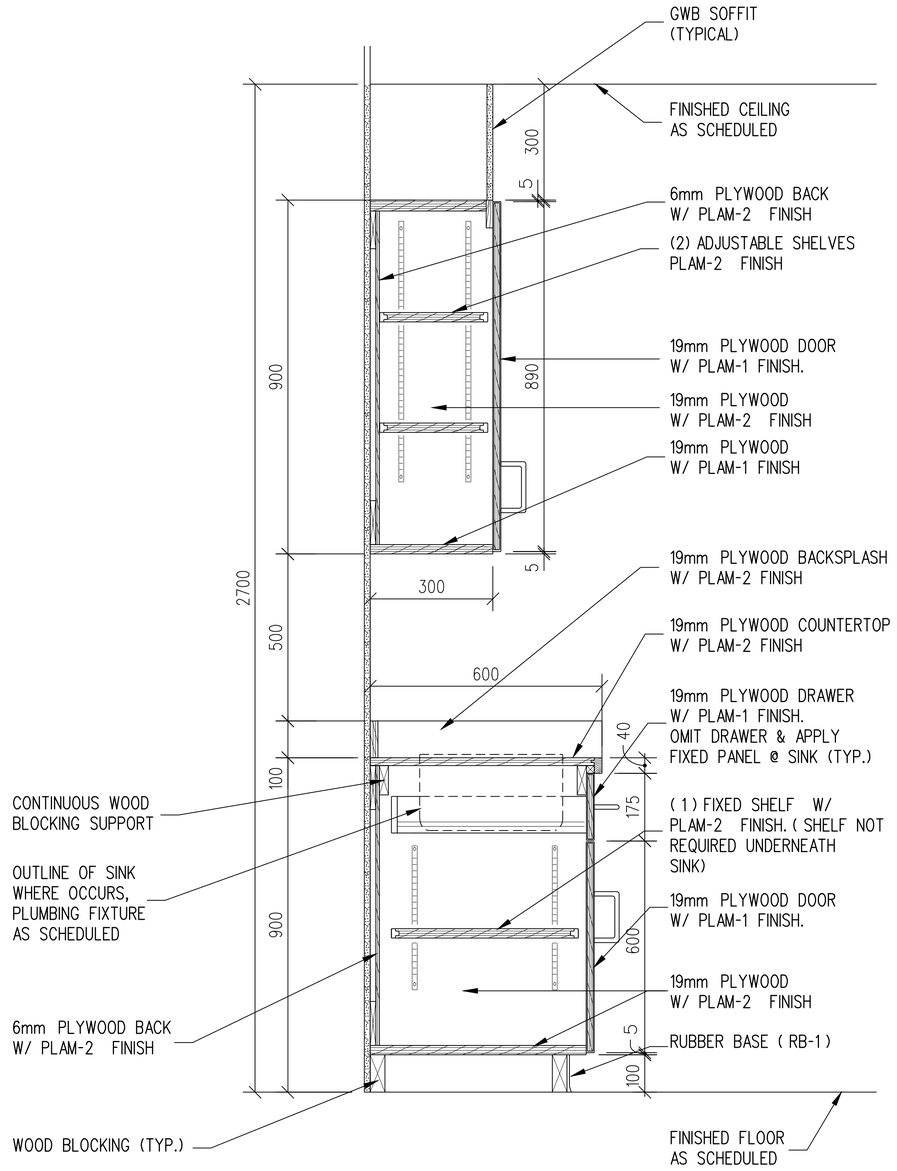

A A404 CABINET DETAIL
SCALE: NOT TO SCALE

US Army Corps of Engineers
New York District

Mark	Description	Date	Appr.

Mark	Description	Date	Appr.

U.S. ARMY ENGINEER DISTRICT
CORPS OF ENGINEERS
NEW YORK, NEW YORK

Designed by: | Date: | Size: 24x36
Dwn by: | Ckd by: | Solicitation no.:
Reviewed by: | Contract no.:
Submitted by: | Plot date: 09-AUG-2005 12:15 | Plot by: e3endnsh | Scale: 1:200000/1:50000

File name: S:\filerooms\military\Fort Drum\ForceMOD\Architectural\Forms\A404.dgn

PN 57708
FORCE MODERNIZATION, EDUCATION (TRANSITIONAL FACILITY)
FORT DRUM, NEW YORK

MILLWORK ELEVATIONS & DETAILS

Sheet reference number:
A–404

Submitted by: e3endnsh
S:\filerooms\military\Fort Drum\ForceMOD\Architectural\ForceMOD57708_A-404xxx.dgn
Plot Date: 09-AUG-2005 12:15

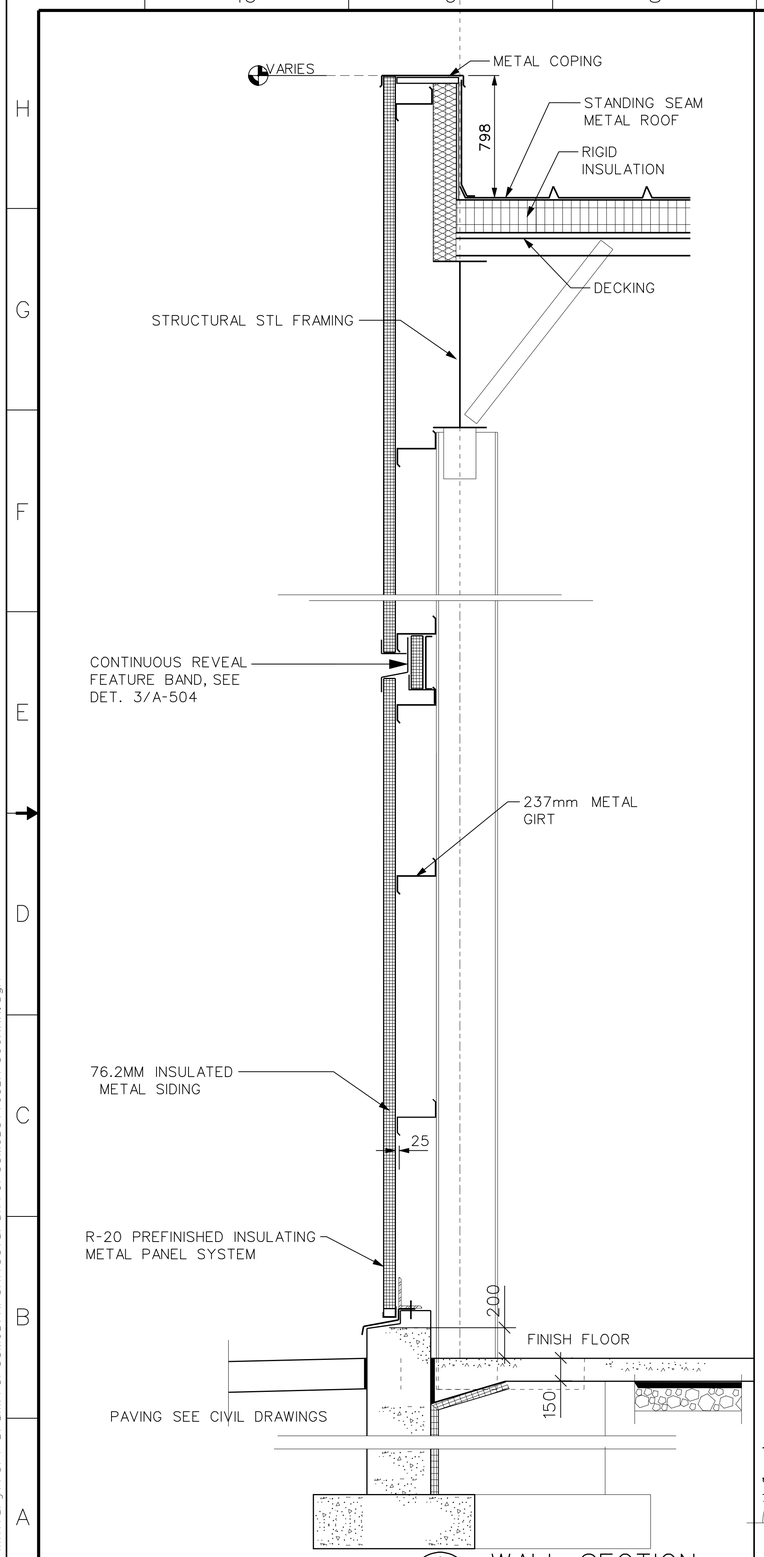

A WALL SECTION
A301 A500 SCALE: 1:20

ALL DIMENSIONS ARE IN MILLIMETERS

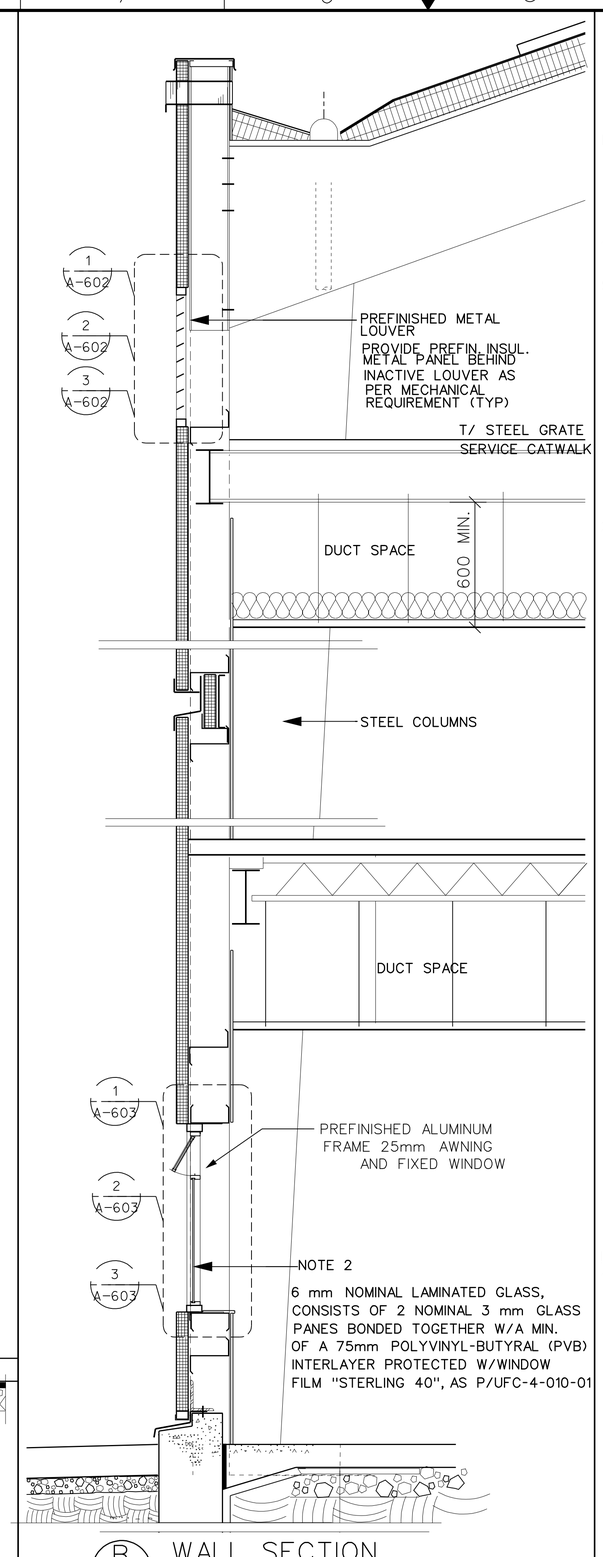

B WALL SECTION
A300 A500 SCALE: 1:20

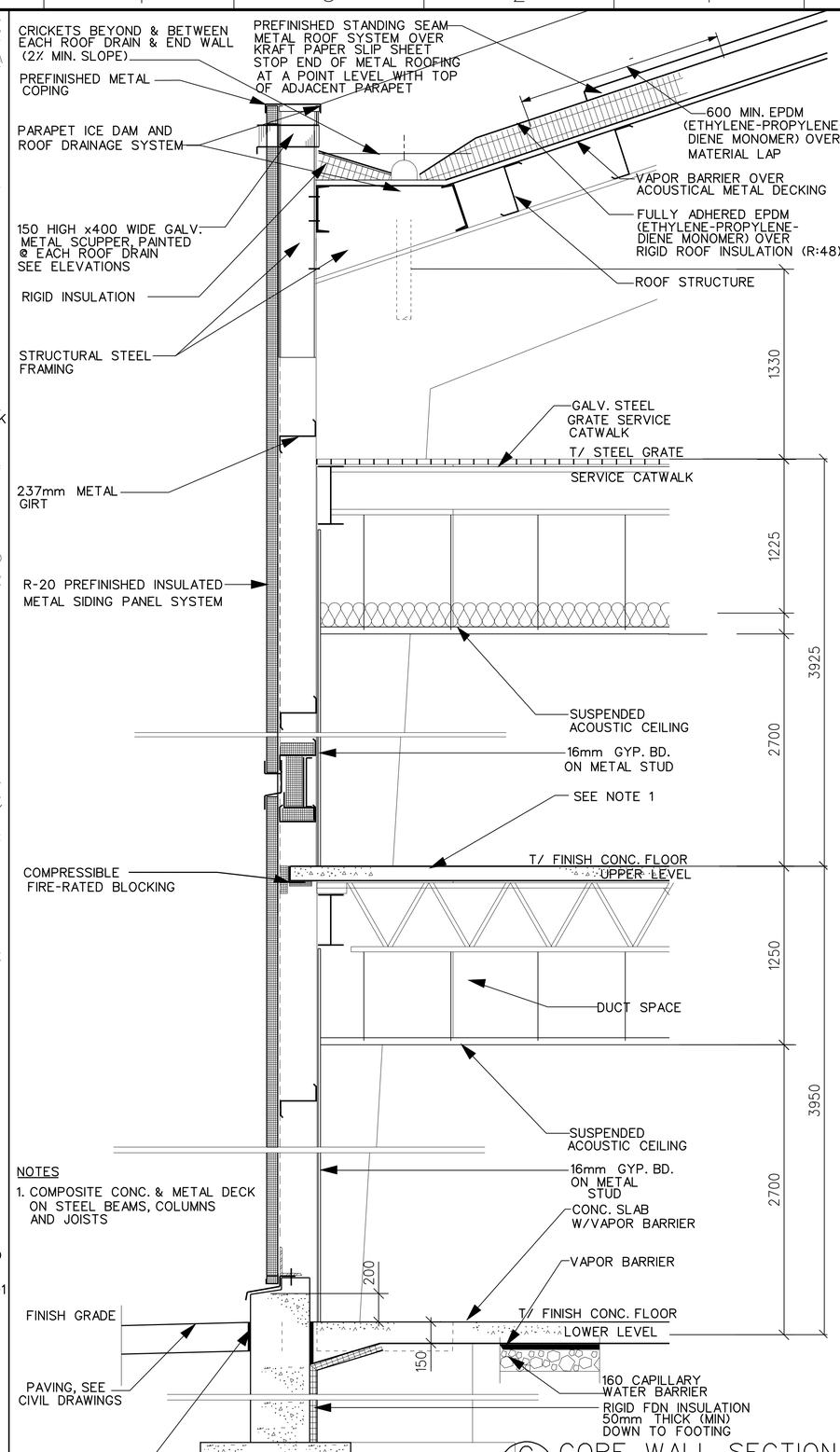

NOTES
1. COMPOSITE CONC. & METAL DECK ON STEEL BEAMS, COLUMNS AND JOISTS

C CORE WALL SECTION
A300 A500 SCALE: 1:20

US Army Corps of Engineers
New York District

Mark	Description	Date	Appr.

Designed by: | Date: | Title: AS
Dwn by: | Ckd by: | Solicitation no.:
Reviewed by: | Contract no.:
Submitted by: | File name: S:\Mission Military\For Dorm\Fort\DD\Architectural\Fortx\DD\0708_A-500xxx.dgn | File date: 09-AUG-2005 12:15 | Plot date: 09-AUG-2005 | Plot by: e3endnsh | Scale: 1:20000/1:00000

U.S. ARMY ENGINEER DISTRICT
CORPS OF ENGINEERS
NEW YORK, NEW YORK

PN 07708
FORCE MODERNIZATION EDUCATION / TRANSITIONAL FACILITY
FORT DRUM, NEW YORK

WALL SECTIONS

Sheet reference number:
A-500

Submitted by: e3endnsh
S:\filer\room\military\Fort Drum\ForceMOD\Architectural\ForceMOD\07708_A-500xxx.dgn
Plot Date: 09-AUG-2005 12:15

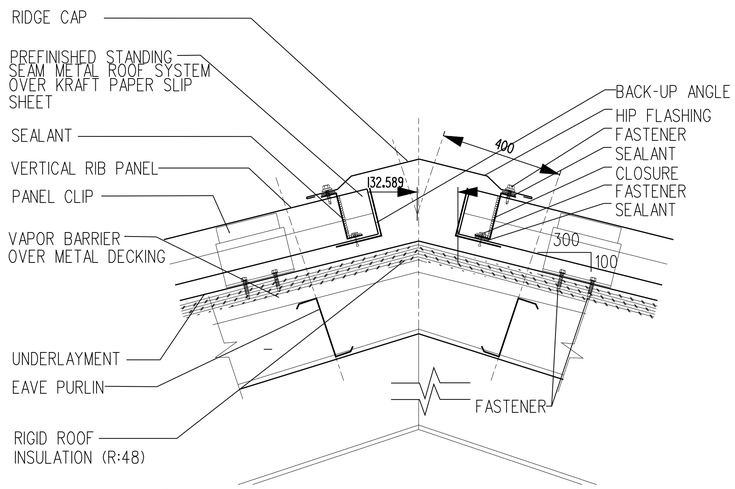

1 RIDGE DETAIL
A104 A501 SCALE: 1:10

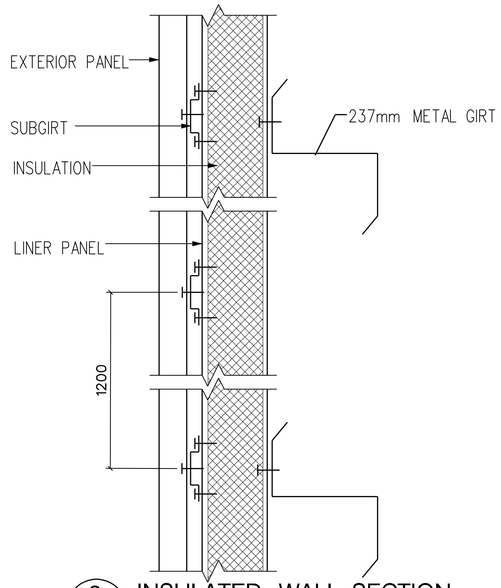

2 INSULATED WALL SECTION
A501 A501 SCALE: N.T.S.

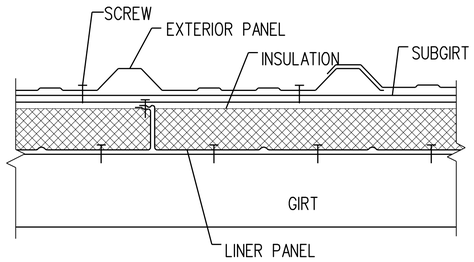

3 INSULATED WALL SECTION
A501 A501 SCALE: N.T.S.

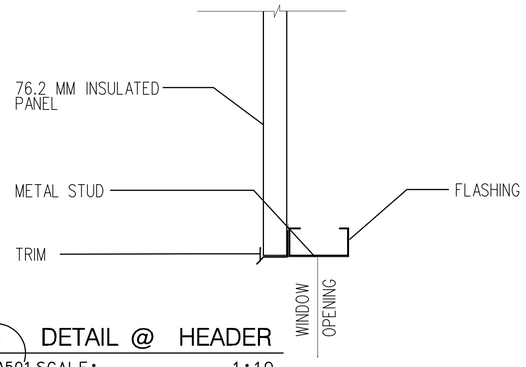

6 DETAIL @ HEADER
A601 A501 SCALE: 1:10

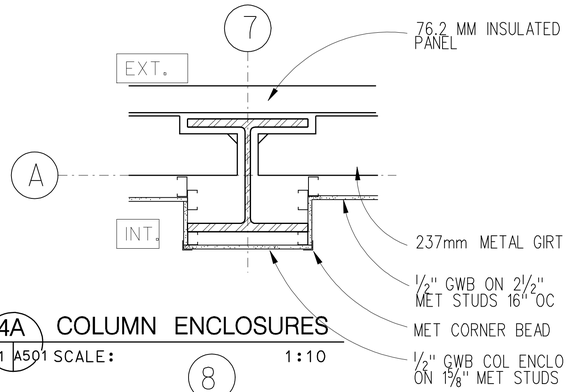

4A COLUMN ENCLOSURES
A101 A501 SCALE: 1:10

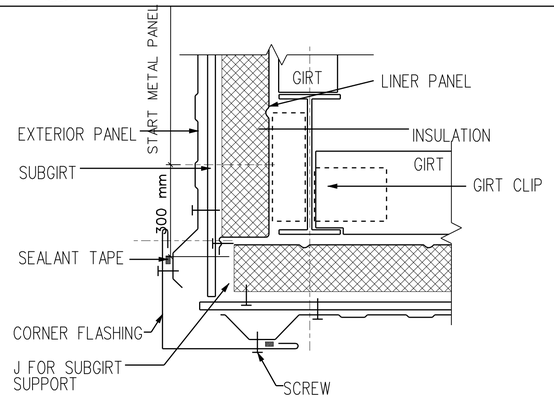

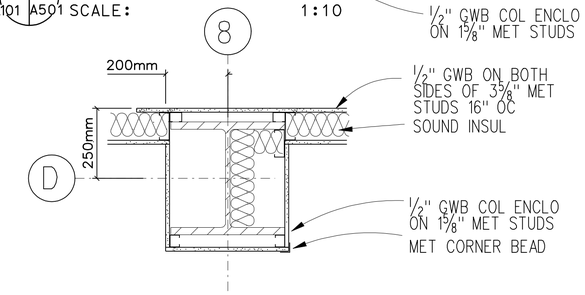

CLASSRM. PART'N
@ 2nd FLR

SEE STRUCT FOR COL SIZE & ORIENTATION

4 COLUMN ENCLOSURES
A101 A501 SCALE: 1:10

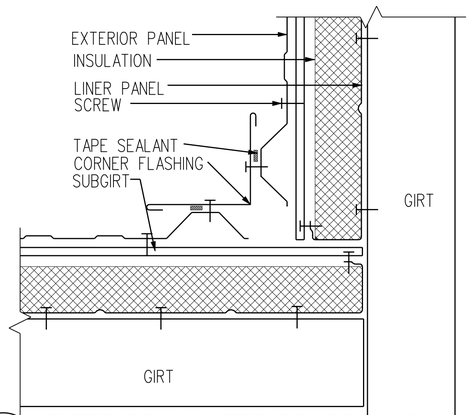

5 EXTERIOR & INTERIOR CORNER
A501 A501 SCALE: 1:10

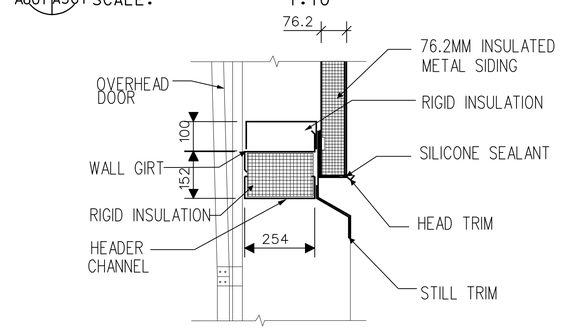

7 DETAIL AT OVERHEAD DOOR REVEAL
A300 A501 SCALE: 1:10

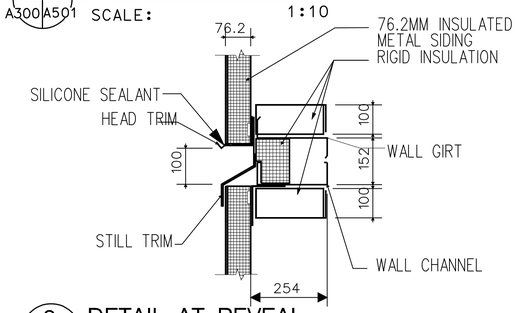

8 DETAIL AT REVEAL
A200 A501 SCALE: 1:10

ALL DIMENSIONS ARE SHOWN IN MILLIMETERS

US Army Corps of Engineers
New York District

Mark	Description	Date	Appr.

Designed by: | Date: | Title: AE
Dwn by: | Ckd by: | Solicitation no.:
Reviewed by: | Contract no.:
Submitted by: | Pkg date: 09-AUG-2005 8:15 Rev. date: 00/00/00 Rev. no.: 00000/00000
U.S. ARMY ENGINEER DISTRICT CORPS OF ENGINEERS NEW YORK, NEW YORK
File name: S:\Mission Military\For Drum\Project\Architectural\ForceMOD\ST708_A-501xxx.dgn

PN 57708
FORCE MODERNIZATION EDUCATION / TRANSITIONAL FACILITY FORT DRUM, NEW YORK

MISCELLANEOUS DETAILS -1

Sheet reference number:
A–501

Plot Date: 09-AUG-2005 12:15
Submitted by: e3endnsh
S:\fileroom\military\Fort Drum\ForceMOD\Architectural\ForceMOD57708_A-501xxx.dgn

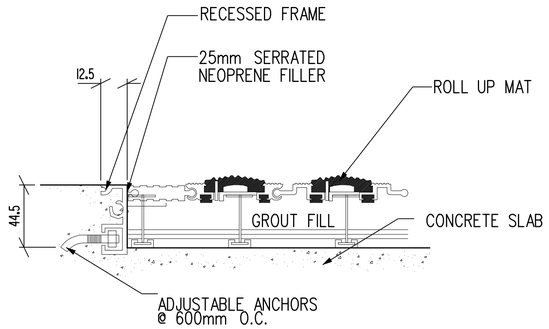

1 RECESS FLOOR MAT DETAIL
A101 A502 SCALE: 1:10

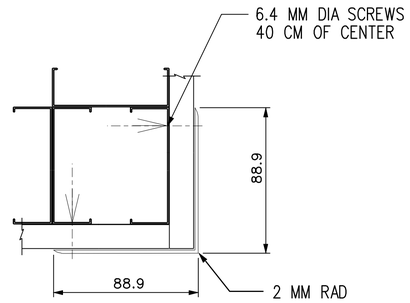

CORNER GUARD TO BE 1800 MM HEIGHT AND MATCH ADJACENT WALL COLOR

2 WALL CORNER GUARDS DETAIL (TYP)
A502 A502 SCALE: 1:10

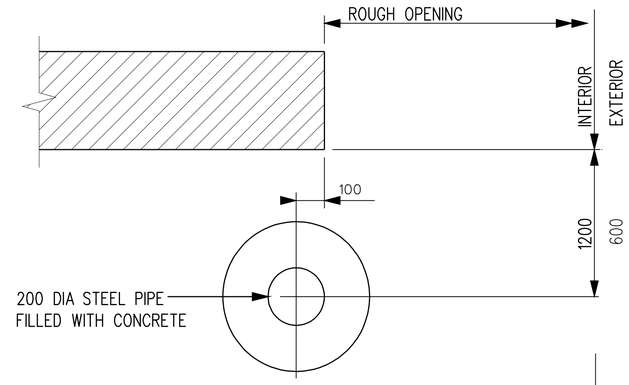

PLAN

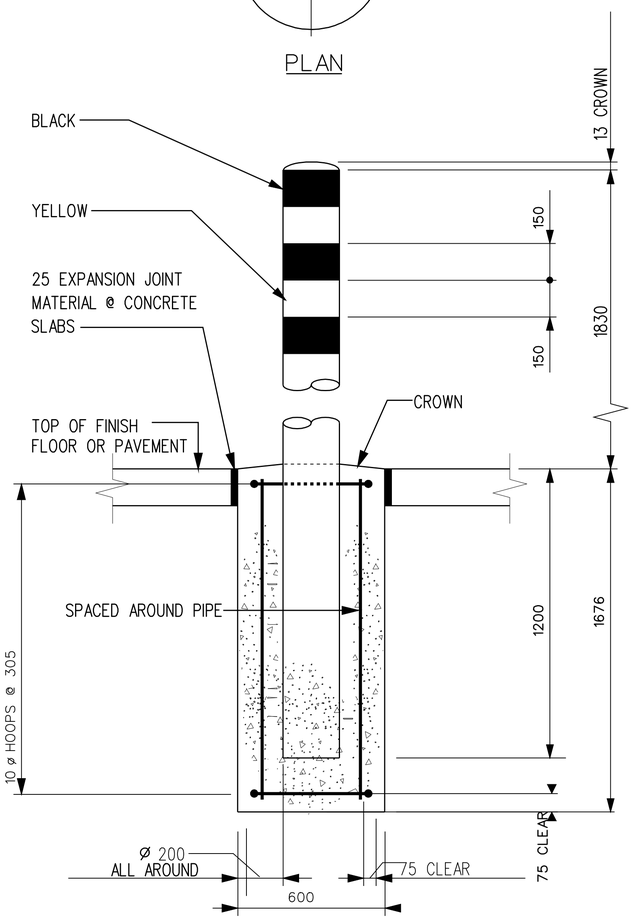

SECTION

7 TYPICAL BOLLARD DETAIL
A100 A502 N.T.S.

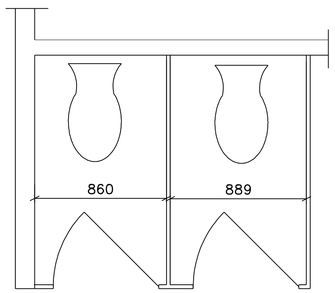

3 TOILET FLOOR PLAN & ELEVATION
A403 A502 SCALE: 1:20

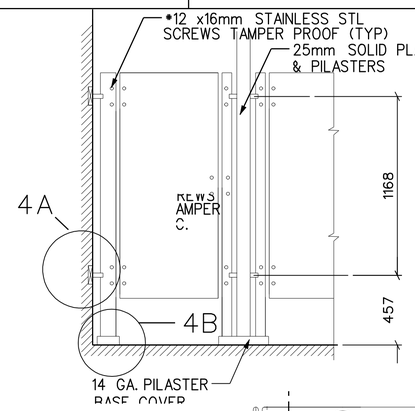

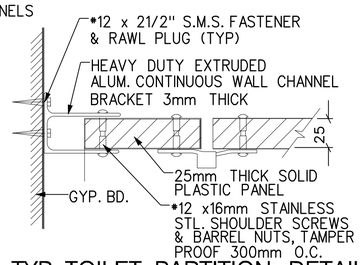

4A TYP. TOILET PARTITION DETAILS
A403 A502 SCALE: 1:20

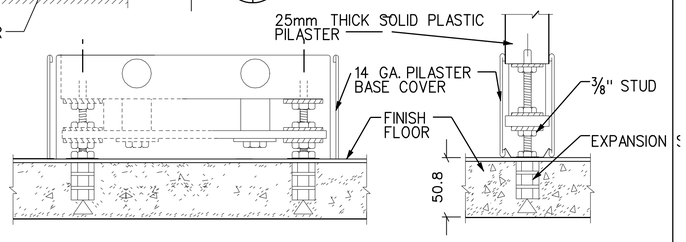

4B TYPICAL TOILET PARTITION DETAILS
A403 A502 SCALE: 1:20

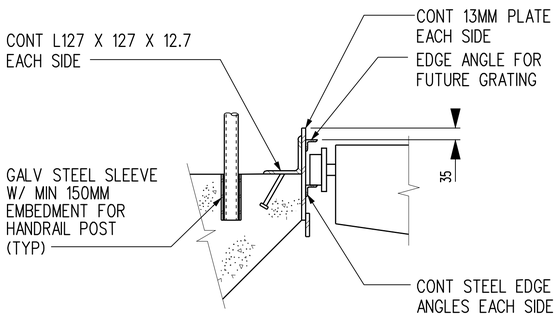

5 STAIR DETAIL
A101 A502 SCALE: 1:10

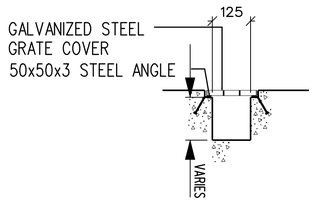

6 TYP. TRENCH DRAIN DETAIL
A100 A502 SCALE: 1:10

ALL DIMENSIONS ARE SHOWN IN MILLIMETERS

US Army Corps of Engineers
New York District

U.S. ARMY ENGINEER DISTRICT
CORPS OF ENGINEERS
NEW YORK, NEW YORK

Designed by: Date:
Dwn by: Ckd by: Solicitation no.:
Reviewed by: Contract no.:
Submitted by: Plot date: 09-AUG-2005 12:15 Plot by: e3endnsh Scale: 1:200000/1:50000

File name: S:\Manual\military\Fort Drum\Force\CD\Architectural\Force\M0057708_A-502xxx.dgn

FORCE MODERNIZATION, EDUCATION (TRANSITIONAL FACILITY) FORT DRUM, NEW YORK

MISCELLANEOUS DETAILS -2

PN 57708
ER 1110-1-8153

Sheet reference number:
A-502

Submitted by: e3endnsh
S:\filerooms\military\Fort Drum\Force\MOD\Architectural\Force\M0057708_A-502xxx.dgn
Plot Date: 09-AUG-2005 12:15

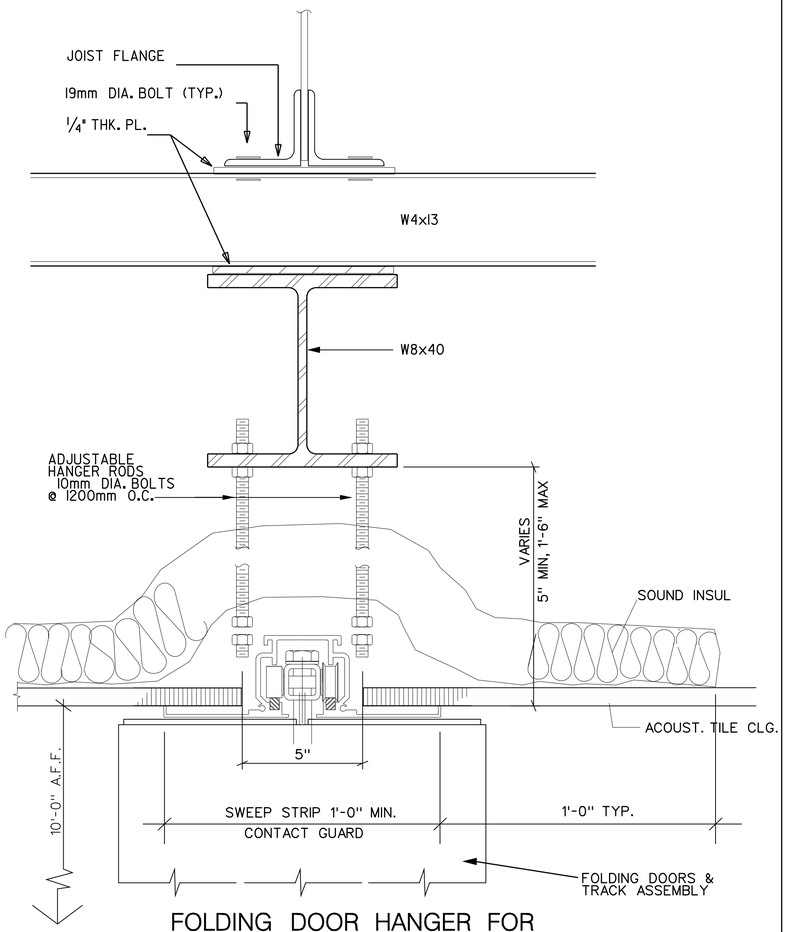

1 A100 A503 FOLDING DOOR HANGER FOR V. CLASSROOM–ELECT. OPERATED

N.T.S.

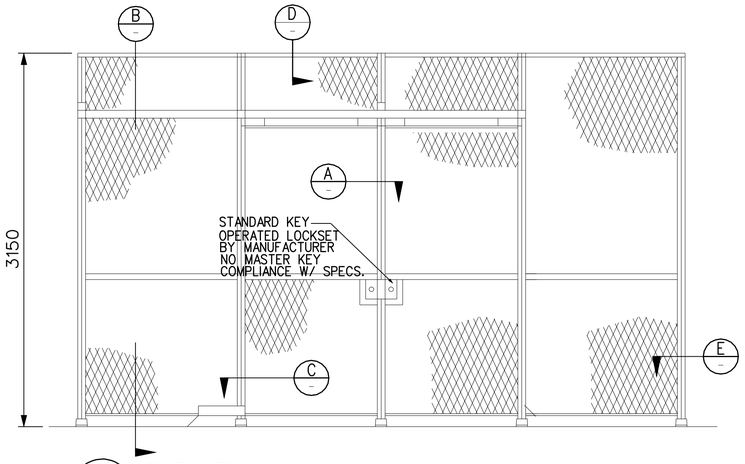

2 A101 A503 ELEVATION

SCALE: 1:20

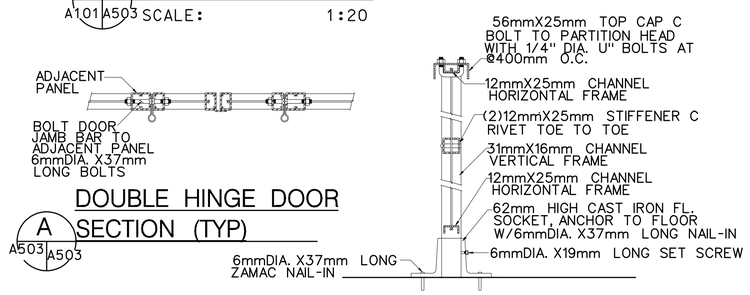

A A503 A503 DOUBLE HINGE DOOR SECTION (TYP)

B A503 A503 TYPICAL PANEL SECTION

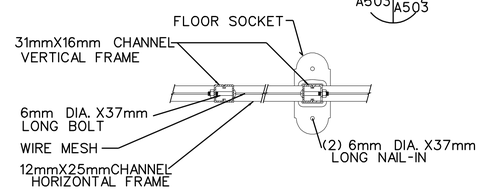

C A503 A503 TYPICAL INTER–PANEL CONNECTION

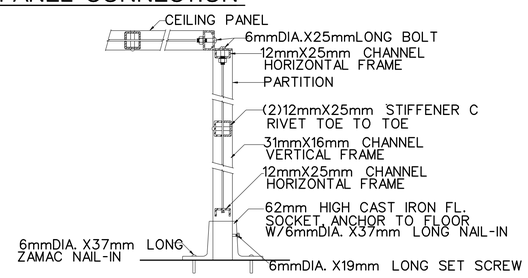

D A503 A503 TYPICAL PARTITION WITH CEILING

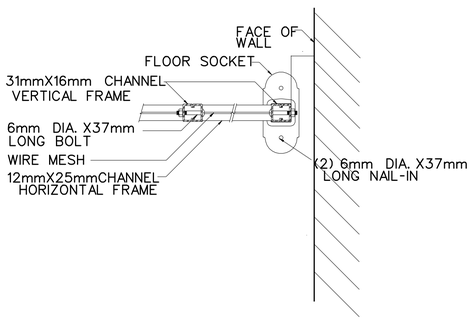

E A503 A503 TYPICAL PANEL CONNECTION AT WALL

3 A503 A503 WIRE–MESH PARTTION DETAILS

SCALE: 1:5

ALL DIMENSIONS ARE SHOWN IN MILLIMETERS

US Army Corps of Engineers
New York District

Mark	Description	Date	Appr.

Mark	Description	Date	Appr.

U.S. ARMY ENGINEER DISTRICT
CORPS OF ENGINEERS
NEW YORK, NEW YORK

Designed by: Date:
Dwn by: Ckd by: Solicitation no.:
Reviewed by: Contract no.:
Submitted by: Plot date: 09-AUG-2005 12:15 Plot scale: 1:1 Scale: 1:200/0.1:20/0.05
File name: S:\Barnum Valley\Fort Drum\Fort Drum\Architectural\Forced\Drawing A-503xxx.dgn

FORCE MODERNIZATION, EDUCATION, (TRANSITIONAL FACILITY FOR ENLISTED MEN) FORT DRUM, NEW YORK

PN 57708

MISCELLANEOUS DETAILS –3

Sheet reference number:

A–503

Submitted by: e3endnsh
S:\filer-oom\military\Fort Drum\ForceMOD\Architectural\ForceMOD57708_A-503xxx.dgn
Plot Date: 09-AUG-2005 12:15

ABBREVIATIONS FOR FIRE EXTINGUISHER

F.E.C.= SEMI-RECESSED FIRE EXTINGUISHER CABINET

S.F.E.C.= SURFACE MOUNTED FIRE EXTINGUISHER CABINET

F.E.= SURFACE MOUNTED FIRE EXTINGUISHER EQUIPT.

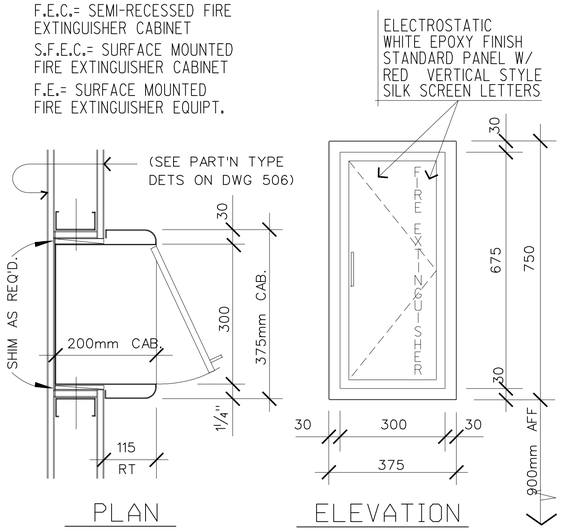

(SEMI-RECESSED FIRE EXTINGUISHER CABINET SHOWN)

NOTE: FIRE EXTING. CABINET TO ACCOMMODATE 2 - 10# ABC EXTINGUISHERS (TYP)

1 A504 FIRE EXTINGUISER CABINET
SCALE 1:100

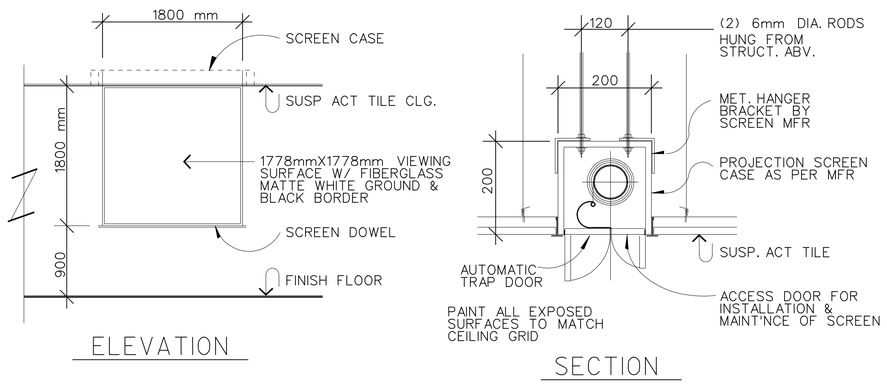

3 A504 PROJECTION SCREEN
SCALE 1:10

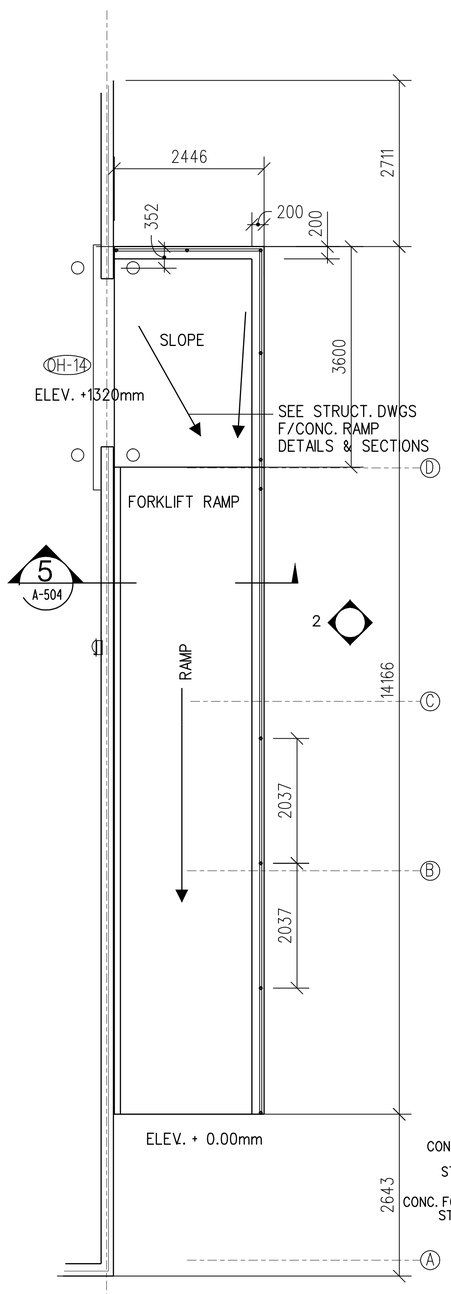

4 A504 ENLARGED RAMP PLAN
SCALE 1:50

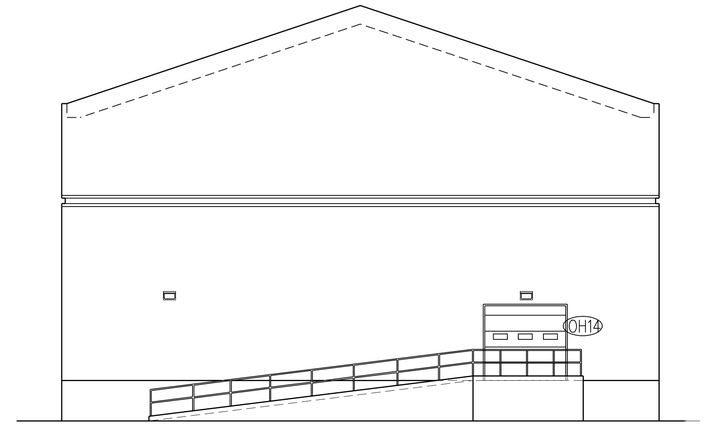

2 A504 RAMP ELEVATION
SCALE 1:100

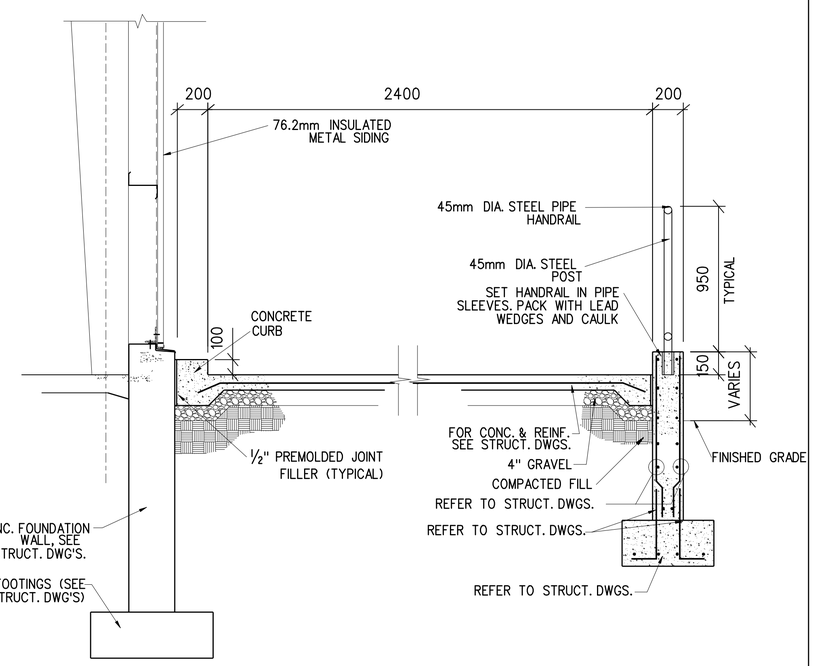

5 A504 RAMP SECTION
SCALE 1:20

ALL DIMENSIONS ARE SHOWN IN MILLIMETERS

US Army Corps of Engineers
New York District

Mark	Description	Date	Appr.

U.S. ARMY ENGINEER DISTRICT
CORPS OF ENGINEERS
NEW YORK, NEW YORK

Designed by: | Date: | File name:
Dwn by: | Ckd by: | Solicitation no.:
Reviewed by: | Contract no.:
Submitted by: | Plot date: 09-AUG-2005 12:15 | Plot by: e3endnsh | Scale: 1:20/50/1:10/0000 | File name: S:\Branch Library Fort Drum\Contracts\Forces\D057708_A-504xxx.dgn

PN. 57708
FORCE MODERNIZATION EDUCATION /TRANSITIONAL FACILITY
FORT DRUM, NEW YORK

MISCELLANEOUS
DETAILS -4

Sheet reference number:
A-504

Plot Date: 09-AUG-2005 12:15
Submitted by: e3endnsh
S:\filer\om\military\Fort Drum\ForceMOD\Architectural\ForceMOD057708_A-504xxx.dgn

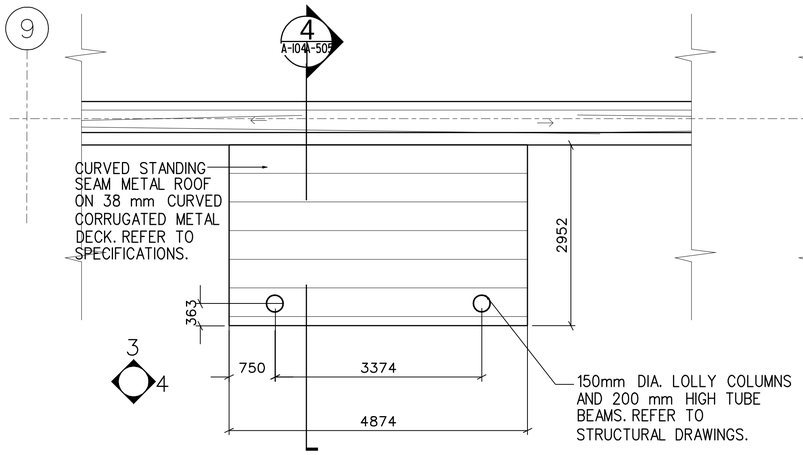

1 CANOPY ROOF PLAN
A104 A505 SCALE: 1:50

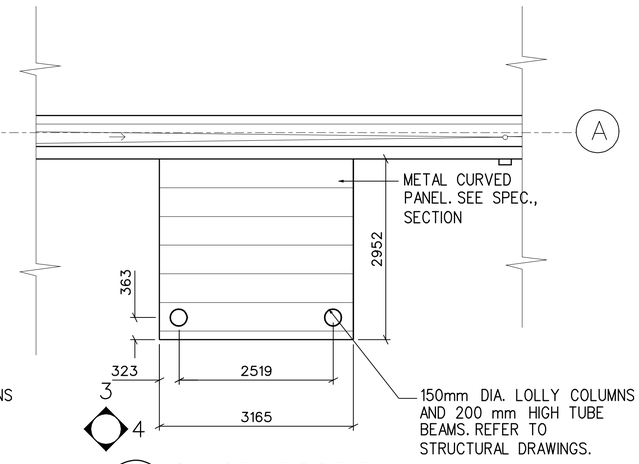

2 CANOPY ROOF PLAN
A104 A505 SCALE: 1:50

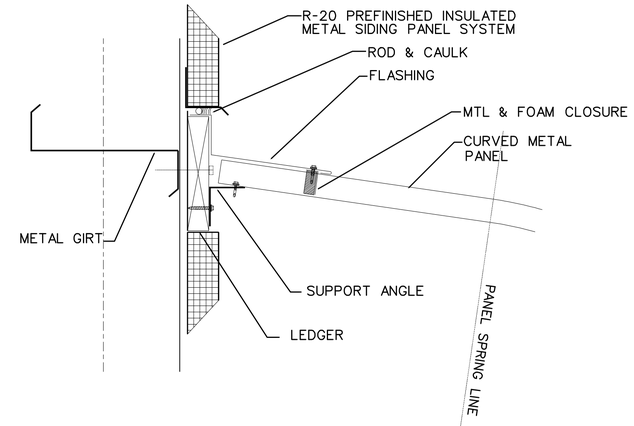

4 PANEL AGAINST GIRT WALL DETAIL
A505 A505 SCALE: 1:10

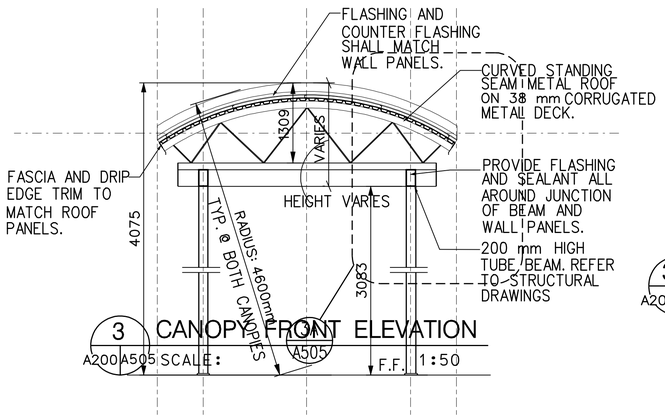

3 CANOPY FRONT ELEVATION
A200 A505 SCALE: 1:50

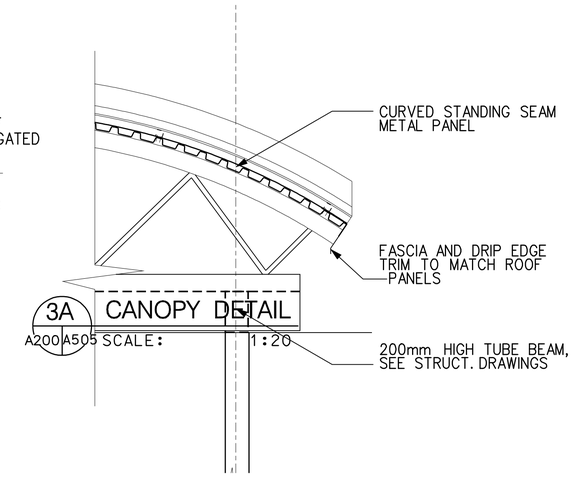

3A CANOPY DETAIL
A200 A505 SCALE: 1:20

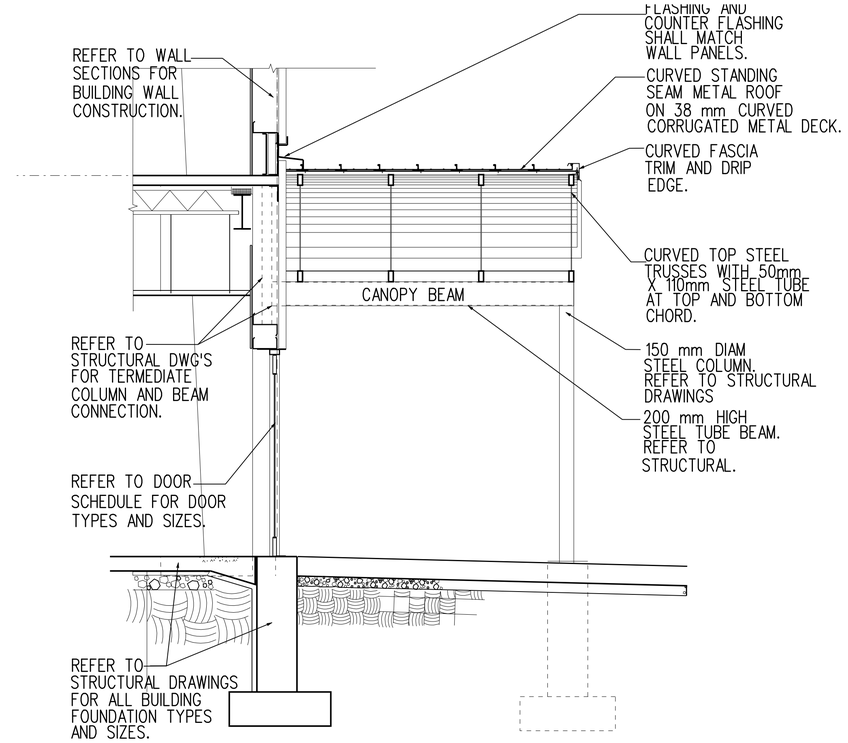

4 SECTION @ CANOPY
A505 A505 SCALE: 1:100

5 CANOPIES ELEVATION
A200 A505 SCALE: 1:100

ALL DIMENSIONS ARE SHOWN IN MILLIMETERS

US Army Corps of Engineers
New York District

Mark	Description	Date	Appr.

Designed by: | Date: | Title: A/E
Dwn by: | Chd by: | Solicitation no.:
Reviewed by: | Contract no.:
Submitted by: | Plot date: 09-AUG-2005 9:15 | Plot by: e3endsh | Rank: 1000000/1000000
File name: S:\Mission Military\For Drum\Fort DRUM\Architectural\Transition\CONTRA_A-505xxx.dgn

U.S. ARMY ENGINEER DISTRICT
CORPS OF ENGINEERS
NEW YORK, NEW YORK

PN 37/38
FORCE MODERNIZATION EDUCATION / TRANSITIONAL FACILITY
FORT DRUM, NEW YORK

ENLARGED CANOPY
SECTION & DETAILS

Sheet reference number:
A–505

Submitted by: e3endsh
S:\fileroom\military\Fort Drum\ForceMOD\Architectural\ForceMOD51708_A-505xxx.dgn
Plot Date: 09-AUG-2005 12:15

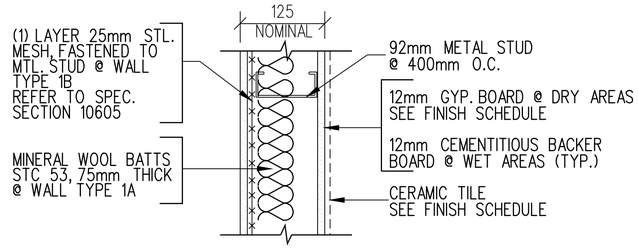

1 NON-FIRE RATED GWB PARTITION

1A NON-FIRE RATED GWB PARTITION

1B NON-FIRE RATED GWB PARTITION

NOTE: AT WALL TYPE 1B, PARTITION SHALL EXTEND FROM FLOOR TO UNDERSIDE OF STRUCTURE ABOVE.

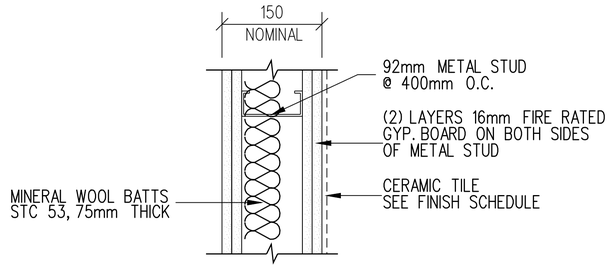

2 2HR-FIRE RATED UL #U411 GWB PARTITION

NOTE: PARTITION SHALL EXTEND FROM FLOOR TO UNDERSIDE OF STRUCTURE ABOVE.

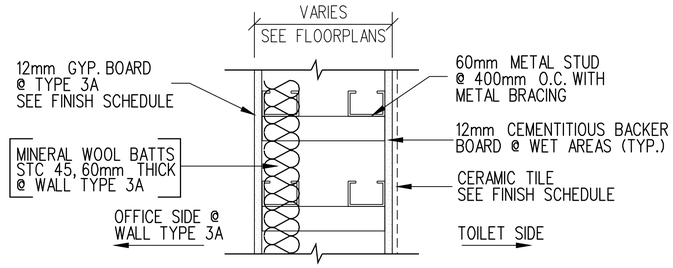

3 PIPE CHASE GWB PARTITION

3A PIPE CHASE GWB PARTITION

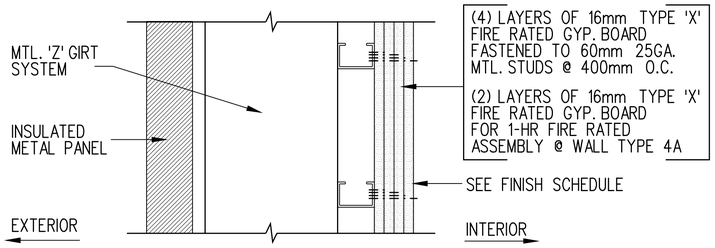

4 2HR- FIRE RATED UL #U652 EXTERIOR WALL ASSEMBLY

NOTE: PARTITION SHALL EXTEND FROM FLOOR TO UNDERSIDE OF STRUCTURE ABOVE.

4A 1HR- FIRE RATED UL #U652 EXTERIOR WALL ASSEMBLY

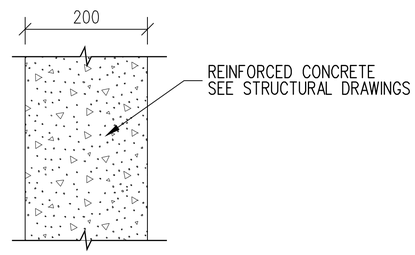

5 ARMS VAULT

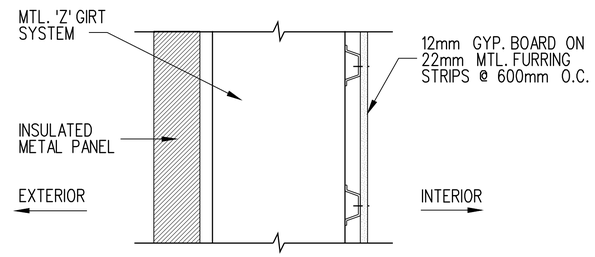

6 NON-RATED EXTERIOR WALL ASSEMBLY

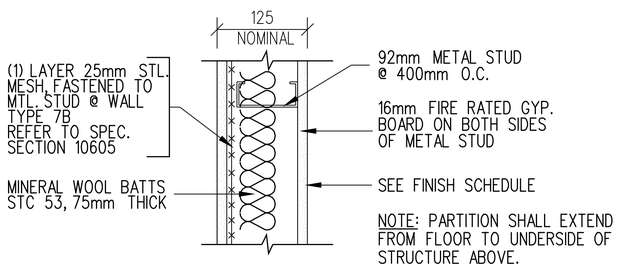

NOTE: PARTITION SHALL EXTEND FROM FLOOR TO UNDERSIDE OF STRUCTURE ABOVE.

7 1HR-FIRE RATED UL #U465 GWB PARTITION

7B 1HR-FIRE RATED UL #1857 GWB PARTITION

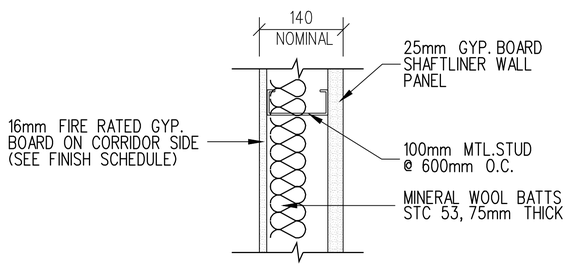

8 1-HR FIRE RATED UL #U499 ELEVATOR SHAFTWALL

NOTE: PARTITION SHALL EXTEND FROM FLOOR TO UNDERSIDE OF STRUCTURE ABOVE.

GENERAL NOTES:

1) FOR ROOMS THAT ARE SCHEDULED TO HAVE ACOUSTICAL TILE CEILINGS, GYP. BOARD AT PARTITIONS SHALL TERMINATE 100mm ABOVE THE CEILING (MINIMUM).

2) ROOMS THAT ARE SCHEDULED TO HAVE GYP. BOARD CEILINGS, GYP. BOARD AT PARTITIONS SHALL TERMINATE AT CEILING LINE.

3) METAL STUD CEILING JOISTS SHALL BE ON THE SHORTER SPAN OF ANY ROOM.

4) REFER TO FINISH SCHEDULE FOR WALL FINISHES.

US Army Corps of Engineers New York District

Mark	Description	Date	Appr.

U.S. ARMY ENGINEER DISTRICT CORPS OF ENGINEERS NEW YORK, NEW YORK

Designed by: Date: JAN 05
Dwn by: Ckd by: Solicitation no:
Reviewed by: Contract no:
Submitted by: File name: S:\Manual Library\Fort Drum\Force\CD\Architectural\Force\A506.dgn
Plot date: 09-AUG-2005 12:15
Plot by: e3endnsh
Scale: 1:200(X),1:200(Y)

PN 57708
FORCE MODERNIZATION, EDUCATION (TRANSITIONAL FACILITY)
FORT DRUM, NEW YORK

PARTITION TYPES

Sheet reference number:
A-506

Submitted by: e3endnsh
S:\fileroom\military\Fort Drum\ForceMOD\Architectural\ForceMOD57708_A-506xxx.dgn
Plot Date: 09-AUG-2005 12:15

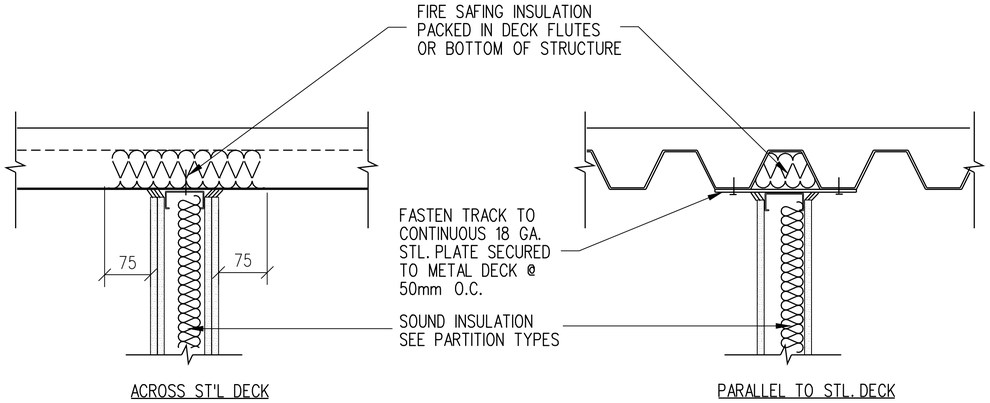

1 / A507 TYP. LATERAL SUPPORT FOR 2-HR GWB PARTITIONS
NOT TO SCALE

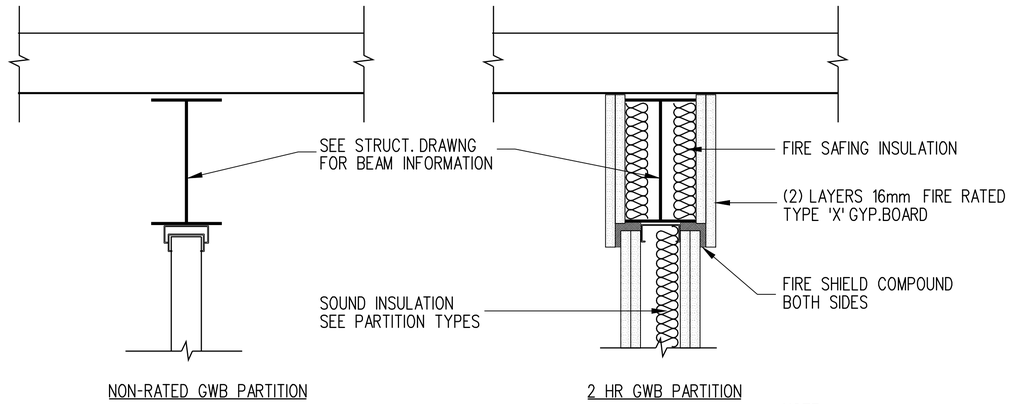

NOTE:
CONTRACTOR SHALL PROVIDE 2-HR FIRE RATED ASSEMBLY AT BEAMS WHERE APPLICABLE.

2 / A507 TYP. LATERAL SUPPORT UNDER BEAM
NOT TO SCALE

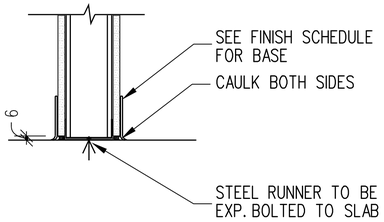

3 / A507 TYP. BOTTOM TRACK
NOT TO SCALE

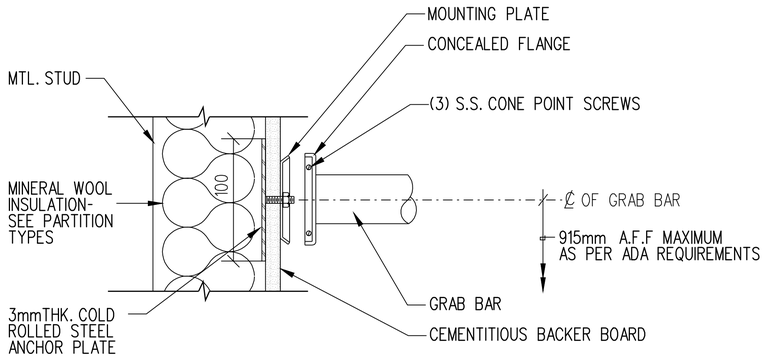

6 / A507 GRAB BAR MOUNTING DETAIL
NOT TO SCALE

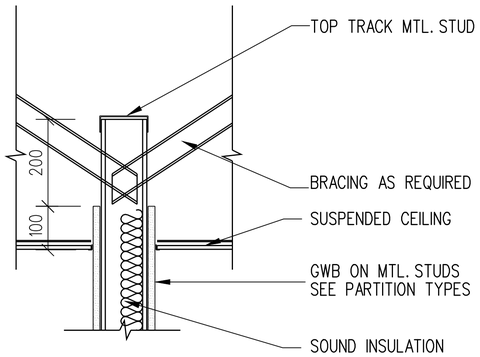

4 / A507 TYP. LATERAL SUPPORT FOR GWB PARTITION
NOT TO SCALE

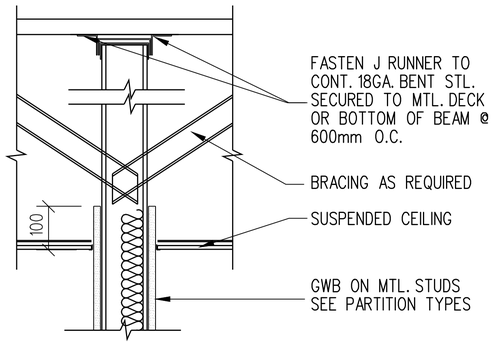

5 / A507 TYP. LATERAL SUPPORT FOR GWB PARTITION
NOT TO SCALE

NOTE:
CROSS BRACING, WHERE REQUIRED, SHALL NOT INTERFERE WITH EQUIPMENT PLACEMENT, DUCTWORK, WINDOW, DOOR, AND LOUVER OPENINGS AND ANY USABLE INTERIOR SPACES. (TYP.)

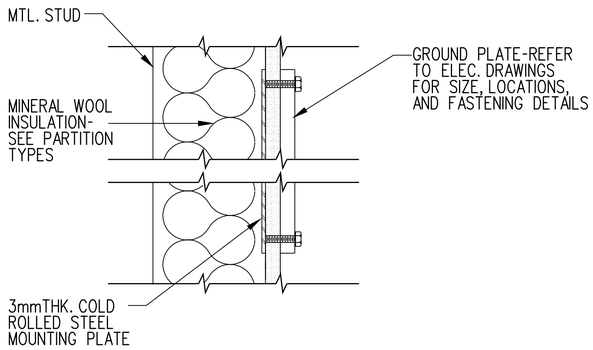

7 / A507 EQUIPMENT MOUNTING DETAIL
NOT TO SCALE

US Army Corps of Engineers
New York District

Mark	Description	Date	Appr.

Designed by: Date:
Dwn by: Ckd by: Solicitation no.:
Reviewed by: Contract no.:
Submitted by: File date: 09-AUG-2005 12:16 Plot date: 09-AUG-2005 12:16 Scale: 1:20000/1:30000
File name: S:\Manual military\Fort Drum\FortDrum\Architectural\FortdrumCD\07708_A-507xxx.dgn

U.S. ARMY ENGINEER DISTRICT
CORPS OF ENGINEERS
NEW YORK, NEW YORK

PN 57708
FORCE MODERNIZATION, EDUCATION (TRANSITIONAL FACILITY)
FORT DRUM, NEW YORK
PARTITION
LATERAL SUPPORT DETAILS

Sheet reference number:
A-507

Submitted by: e3endnsh
S:\filer\room\military\Fort Drum\ForceMOD\Architectural\ForceMOD57708_A-507xxx.dgn
Plot Date: 09-AUG-2005 12:16

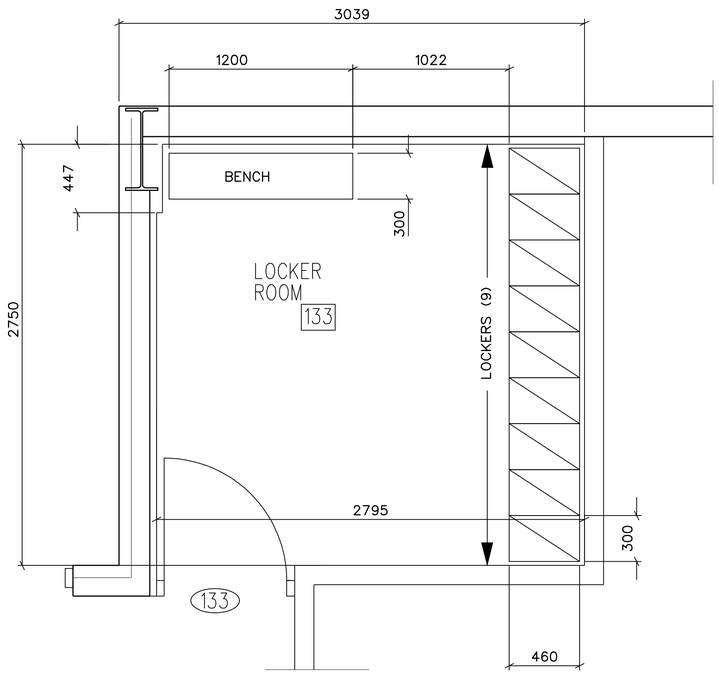

1 ENLARGED LOCKER RM FLOOR PLAN

A100 A508 SCALE: 1:20

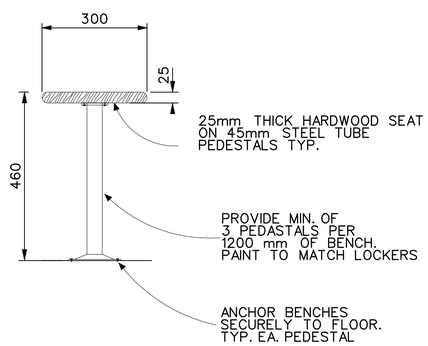

2 TYPICAL BENCH SECTION

A508 A508 SCALE: N.T.S.

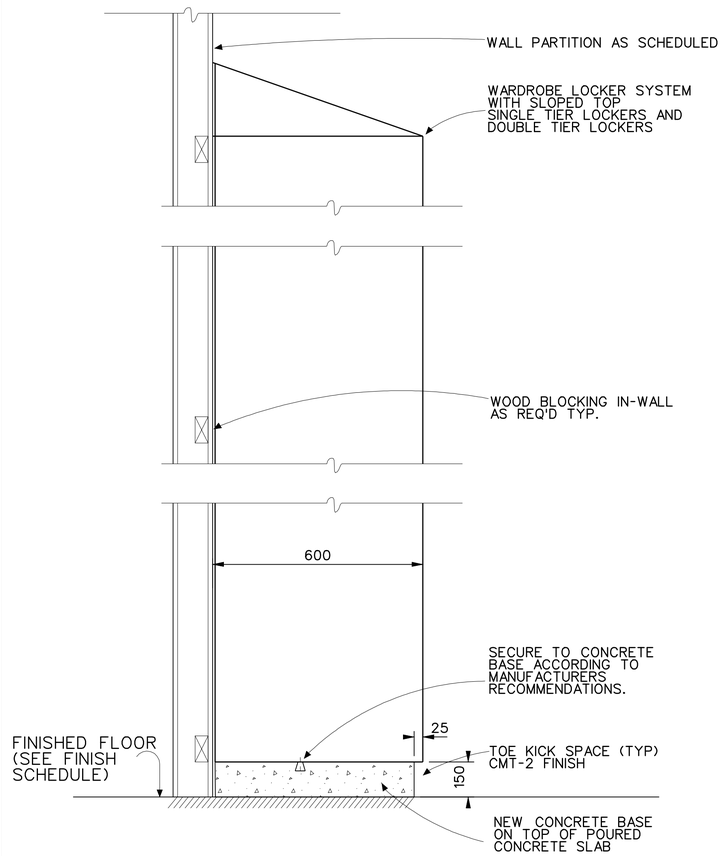

NOTES:

1. PROVIDE FINISHED PANELS @ ALL EXPOSED ENDS OF LOCKERS
2. PROVIDE FINISHED FILLER PIECES AS REQUIRED FOR CONTINUOUS FLUSH RUNS, TYP.

3 TYPICAL LOCKER SECTION

A508 A508 SCALE: N.T.S.

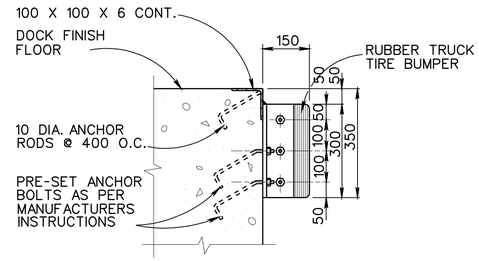

4 DOCK BUMPER DETAIL

A508 A508 SCALE: 1:10

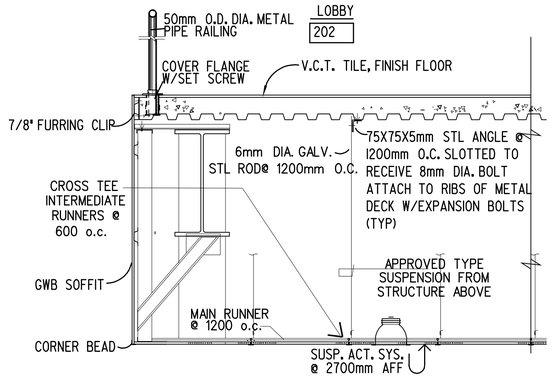

5 SOFFIT DETAIL @ LOBBY

A508 A508 SCALE: N.T.S.

ALL DIMENSIONS ARE SHOWN IN MILLIMETERS

US Army Corps of Engineers
New York District

Mark	Date	Appr.	Description

Designed by:	Date:
Dwn by:	Ckd by:
Reviewed by:	Solicitation no.:
Submitted by:	Contract no.:
	Plot date: 09-AUG-2005 12:16
	Plot scale: 1:1
	Size: 1200X1700000

File name: S:\Roman\military\Fort Drum\FDIC\Architectural\Forced\D57708_A-508xxx.dgn

U.S. ARMY ENGINEER DISTRICT
CORPS OF ENGINEERS
NEW YORK, NEW YORK

PN 57708
FORCE MODERNIZATION: EDUCATION / TRANSITIONAL FACILITY
FORT DRUM, NEW YORK

MISCELLANEOUS
DETAILS -5

Sheet reference number:
A-508

Plot Date: 09-AUG-2005 12:16
Submitted by: e3endnsh
S:\filer\oom\military\Fort Drum\ForceMOD\Architectural\ForceMOD57708_A-508xxx.dgn

ROOM FINISH SCHEDULE

	ROOM NO.	ROOM	FLOOR MAT.	FLOOR FINISH	FLOOR COLOR	BASE MAT.	BASE FINISH	BASE COLOR	WEST WALL MAT.	WEST WALL FINISH	WEST WALL F.R. (HOUR)	EAST WALL MAT.	EAST WALL FINISH	EAST WALL F.R. (HOUR)	NORTH WALL MAT.	NORTH WALL FINISH	NORTH WALL F.R. (HOUR)	SOUTH WALL MAT.	SOUTH WALL FINISH	SOUTH WALL F.R. (HOUR)	CEILING MAT.	CEILING FINISH	CEILING F.R. (HOUR)	HEIGHT	REMARKS
FIRST FLOOR	101	VESTIBULE	QT	NONSLIP	QT-1 GT-2	QT	NONSLIP	QT-1 GT-2	GWB	PT-1		GWB	PT-1		GWB	PT-1		GWB	PT-1		ACT	ACT-1		2700	NOTES 1,2,5,8
	102	CORRIDOR	VCT		VCT-1	RB		RB-2	GWB	PT-1		GWB	PT-1		GWB	PT-1		—	—		ACT	ACT-1		2700	NOTE 1
	103	CORRIDOR	VCT		VCT-1	RB		RB-2	GWB	PT-1		GWB	PT-1		GWB	PT-1		GWB	PT-1		ACT	ACT-1		2700	NOTE 1
	104	BREAK ROOM	VCT		VCT-1	RB		RB-2	GWB	PT-1		GWB	PT-1		GWB	PT-1		GWB	PT-1		ACT	ACT-1		2700	
	105	CONFERENCE ROOM	CPT		CPT-1	RB		RB-1	GWB	PT-2		GWB	PT-2		GWB	PT-2		GWB	PT-2		ACT	ACT-2		2700	
	106	VEHICLE CLASSROOM	SEAL CONC.	EPOXY	LIGHT BROWN	—		—	GWB	PT-1		GWB	PT-1		—	—		EXP STR	PT-1		ACT	ACT-2		4900	NOTE 3
	106A	VEHICLE CLASSROOM	SEAL CONC.	EPOXY	LIGHT BROWN	—		—	GWB	PT-1		GWB	PT-1		EXP STR	PT-1		—	—		ACT	ACT-2		4900	NOTE 3
	107	VEHICLE PROCESSING	SEAL CONC.	EPOXY	LIGHT BROWN	—		—	EXP STR	PT-1		GWB	PT-1		EXP STR	PT-1		EXP STR	PT-1		EXP STR	PT-1		—	NOTE 3
	108	FURNITURE STORAGE	SEAL CONC.	EPOXY	LIGHT BROWN	RB		RB-1	GWB	PT-1		GWB	PT-1		GWB	PT-1		GWB	PT-1		EXP STR	PT-1		—	NOTE 3
	109	MISCELLANEOUS STORAGE	SEAL CONC.	EPOXY	LIGHT BROWN	RB		RB-1	GWB	PT-1		GWB	PT-1		GWB	PT-1		GWB	PT-1		EXP STR	PT-1		—	NOTE 3
	110	JANITOR'S CLOSET	SEAL CONC.	EPOXY	LIGHT BROWN	RB		RB-1	GWB	PT-1		GWB	PT-1		GWB	PT-1		GWB	PT-1		WRGWB	PT-3		2400	NOTE 3
	111	MEN'S ROOM	CMT	NONSLIP	CMT-2 GT-1	CMT		CMT-2 GT-1	CT / GWB	CT-1 / PT-8		CT / GWB	CT-1 / PT-8		CT / GWB	CT-1 / PT-8		CT / GWB	CT-1 / PT-8		WRGWB	PT-3		2700	NOTE 5,8
	112	WOMEN'S TOILET	CMT	NONSLIP	CMT-1 GT-1	CMT		CMT-1 GT-1	CT / GWB	CT-1 / PT-7		CT / GWB	CT-1 / PT-7		CT / GWB	CT-1 / PT-7		CT / GWB	CT-1 / PT-7		WRGWB	PT-3		2700	NOTE 5,8
	113	COMMUNICATION ROOM	VCT		VCT-1	RB		RB-2	GWB	PT-1		GWB	PT-1		GWB	PT-1		GWB	PT-1		ACT	ACT-1		2400	
	114	ELECTRIC ROOM	SEAL CONC.	EPOXY	LIGHT BROWN	RB		RB-1	GWB	PT-1	2	GWB	PT-1	2	GWB	PT-1	2	GWB	PT-1	2	EXP STR	PT-1	2	—	NOTE 3
	115	MECHANICAL ROOM	SEAL CONC.	EPOXY	LIGHT BROWN	RB		RB-1	GWB	PT-1	2	GWB	PT-1	2	GWB	PT-1	2	GWB	PT-1	2	EXP STR	PT-1	2	—	NOTE 3
	116	ARMS VAULT	SEAL CONC.	EPOXY	LIGHT BROWN	—		—	REINF. CONC.	—		REINF. CONC.	—		REINF. CONC.	—		REINF. CONC.	—		REINF. CONC.	—		3200	NOTE 3
	117	WAREHOUSE	SEAL CONC.	EPOXY	LIGHT BROWN	—		—	GWB	PT-1		EXP STR	PT-1		EXP STR	PT-1		EXP STR	PT-1		EXP STR	PT-1		—	NOTE 3
	118	INCREASED SECURITY STORAGE	SEAL CONC.	EPOXY	LIGHT BROWN	—		—	GWB	PT-1		WIRE MESH	—		WIRE MESH	—		WIRE MESH	—		WIRE MESH	—		—	NOTE 3
	119	CORRIDOR	VCT		VCT-1	RB		RB-2	GWB	PT-1		GWB	PT-1		GWB	PT-1		GWB	PT-1		ACT	ACT-1		2700	NOTE 1
	120	LOBBY	QT	NONSLIP	QT-1 GT-2	QT	NONSLIP	QT-1 GT-2	GWB	PT-1		GWB	PT-1		GWB	PT-1		GWB	PT-1		ACT	ACT-1		2700	NOTE 1,2,5,8
	121	STAIR #1	VCT		VCT-1	—		—	GWB	PT-1	1	GWB	PT-1	1	GWB	PT-1	1	GWB	PT-1	1	GWB	PT-3	1	—	
	122	OFFICE	CPT		CPT-1	RB		RB-1	GWB	PT-2		GWB	PT-2		GWB	PT-2		GWB	PT-2		ACT	ACT-2		2700	
	123	OFFICE	CPT		CPT-1	RB		RB-1	GWB	PT-2		GWB	PT-2		GWB	PT-2		GWB	PT-2		ACT	ACT-2		2700	
	124	COPY ROOM	VCT		VCT-1	RB		RB-2	GWB	PT-2		GWB	PT-2		GWB	PT-2		GWB	PT-2		ACT	ACT-1		2700	
	125	CORRIDOR	VCT		VCT-1	RB		RB-2	GWB	PT-1		GWB	PT-1		—	—		GWB	PT-1		ACT	ACT-1		2700	NOTE 1
	126	OFFICE	CPT		CPT-1	RB		RB-1	GWB	PT-2		GWB	PT-2		GWB	PT-2		GWB	PT-2		ACT	ACT-2		2700	
	127	OFFICE	CPT		CPT-1	RB		RB-1	GWB	PT-2		GWB	PT-2		GWB	PT-2		GWB	PT-2		ACT	ACT-2		2700	
	128	OFFICE	CPT		CPT-1	RB		RB-1	GWB	PT-2		GWB	PT-2		GWB	PT-2		GWB	PT-2		ACT	ACT-2		2700	
	129	OFFICE	CPT		CPT-1	RB		RB-1	GWB	PT-2		GWB	PT-2		GWB	PT-2		GWB	PT-2		ACT	ACT-2		2700	
	130	OFFICE	CPT		CPT-1	RB		RB-1	GWB	PT-2		GWB	PT-2		GWB	PT-2		GWB	PT-2		ACT	ACT-2		2700	
	131	OFFICE	CPT		CPT-1	RB		RB-1	GWB	PT-2		GWB	PT-2		GWB	PT-2		GWB	PT-2		ACT	ACT-2		2700	
	132	STAIR #2	VCT		VCT-1	—		—	GWB	PT-1	1	GWB	PT-1	1	GWB	PT-1	1	GWB	PT-1	1	GWB	PT-3	1	—	
	133	LOCKERS ROOM	SEAL CONC.	EPOXY	LIGHT BROWN	RB		RB-2	GWB	PT-1		GWB	PT-1		GWB	PT-1		GWB	PT-1		WRGWB	PT-3		2700	
	134	ELEV. MACHINE ROOM	SEAL CONC.	EPOXY	LIGHT BROWN	RB		RB-2	GWB	PT-1		GWB	PT-1		GWB	PT-1		GWB	PT-1		EXP STR	PT-1		—	NOTE 3
	135	OFFICE	CPT		CPT-1	RB		RB-2	GWB	PT-2		GWB	PT-2		GWB	PT-2		GWB	PT-2		ACT	ACT-2		2700	
	136	CORRIDOR	SEAL CONC.	EPOXY	LIGHT BROWN	RB		RB-2	—	—		GWB	PT-1		GWB	PT-1		GWB	PT-1		ACT	ACT-1		2700	NOTE 1
SECOND FLOOR	201	STAIR #1	VCT		VCT-1	—		—	GWB	PT-1	1	GWB	PT-1	1	GWB	PT-1	1	GWB	PT-1	1	GWB	PT-3	1	—	
	202	LOBBY	VCT		VCT-1	RB		RB-2	GWB	PT-1		GWB	PT-1		—	—		—	—		ACT	ACT-1		2700	NOTE 1
	203	ELECT. CLOSET	VCT		VCT-1	RB		RB-2	GWB	PT-1		GWB	PT-1		GWB	PT-1		GWB	PT-1		ACT	ACT-1		2400	
	204	CORRIDOR	VCT		VCT-1	RB		RB-2	GWB	PT-1		GWB	PT-1		GWB	PT-1		GWB	PT-1		ACT	ACT-1		2700	NOTE 1
	205	CLASSROOM	VCT		VCT-1	RB		RB-2	GWB	PT-1		GWB	PT-1		GWB	PT-1		GWB	PT-1		ACT	ACT-2		2700	
	206	COM. CLOSET	VCT		VCT-1	RB		RB-2	GWB	PT-1		GWB	PT-1		GWB	PT-1		GWB	PT-1		ACT	ACT-1		2400	
	207	CLASSROOM	VCT		VCT-1	RB		RB-2	GWB	PT-1		GWB	PT-1		GWB	PT-1		GWB	PT-1		ACT	ACT-2		2700	
	208	CLASSROOM	VCT		VCT-1	RB		RB-2	GWB	PT-1		GWB	PT-1		GWB	PT-1		GWB	PT-1		ACT	ACT-2		2700	
	209	CLASSROOM	VCT		VCT-1	RB		RB-2	GWB	PT-1		GWB	PT-1		GWB	PT-1		GWB	PT-1		ACT	ACT-2		2700	
	210	CORRIDOR	VCT		VCT-1	RB		RB-2	GWB	PT-1		GWB	PT-1		GWB	PT-1		GWB	PT-1		ACT	ACT-1		2700	NOTE 1
	211	WOMEN'S TOILET	CMT	NONSLIP	CMT-1 GT-1	CMT	NONSLIP	CMT-1 GT-1	CT / GWB	CT-1 / PT-7		CT / GWB	CT-1 / PT-7		CT / GWB	CT-1 / PT-7		CT / GWB	CT-1 / PT-7		WRGWB	PT-3		2700	NOTE 5,8
	212	MEN'S TOILET	CMT	NONSLIP	CMT-2 GT-1	CMT	NONSLIP	CMT-2 GT-1	CT / GWB	CT-1 / PT-8		CT / GWB	CT-1 / PT-8		CT / GWB	CT-1 / PT-8		CT / GWB	CT-1 / PT-8		WRGWB	PT-3		2700	NOTE 5,8
	213	OFFICE	CPT		CPT-1	RB		RB-1	GWB	PT-2		GWB	PT-2		GWB	PT-2		GWB	PT-2		ACT	ACT-2		2700	
	214	JAN. CLOSET	SEAL CONC.	EPOXY	LIGHT BROWN	RB		RB-2	GWB	PT-1		GWB	PT-1		GWB	PT-1		GWB	PT-1		WRGWB	PT-3		2400	NOTE 3
	215	OFFICE	CPT		CPT-1	RB		RB-1	GWB	PT-2		GWB	PT-2		GWB	PT-2		GWB	PT-2		ACT	ACT-2		2700	
	216	CONFERENCE ROOM	CPT		CPT-1	RB		RB-1	GWB	PT-2		GWB	PT-2		GWB	PT-2		GWB	PT-2		ACT	ACT-2		2700	
	217	OFFICE	CPT		CPT-1	RB		RB-1	GWB	PT-2		GWB	PT-2		GWB	PT-2		GWB	PT-2		ACT	ACT-2		2700	
	218	STORAGE	VCT		VCT-1	RB		RB-2	GWB	PT-1		GWB	PT-1		GWB	PT-1		GWB	PT-1		EXP STR	PT-1		—	
	219	BREAK ROOM	VCT		VCT-1	RB		RB-2	GWB	PT-1		GWB	PT-1		GWB	PT-1		GWB	PT-1		ACT	ACT-1		2700	
	220	STAIR # 2	VCT		VCT-1	—		—	GWB	PT-1	1	GWB	PT-1	1	GWB	PT-1	1	GWB	PT-1	1	GWB	PT-3	1	—	
	221	CORRIDOR	VCT		VCT-1	RB		RB-2	GWB	PT-1		GWB	PT-1		GWB	PT-1		GWB	PT-1		ACT	ACT-1		2700	NOTE 1
	301	STAIR # 1	VCT		VCT-1	—		—	GWB	PT-1	1	GWB	PT-1	1	GWB	PT-1	1	GWB	PT-1	1	GWB	PT-3	1	—	
	302	MECHANICAL FAN ROOM	—		—	—		—	EXP STR	PT-1		EXP STR	PT-1		EXP STR	PT-1		EXP STR	PT-1		EXP STR	PT-1		—	

ABBREVIATIONS

GWB	GYPSUM WALL BOARD
ACT	ACOUSTICAL CEILING TILE
EXP STR	EXPOSED STRUCTURE
SEAL CONC.	SEALED CONCRETE
CT	CERAMIC TILE
CMT	CERAMIC MOSAIC TILE
RB	RUBBER BASE
VCT	VINYL COMPOSITION TILE
QT	QUARRY TILE
CPT	CARPET
WRGWB	WATER RESISTANT GYPSUM WALL BOARD
F.R.	FIRE RATED
REINF. CONC.	REINFORCED CONCRETE
PT	PAINT
EM	ENTRY MAT
TP	TOILET PARTITION
GT	GROUT

GENERAL NOTES

1) ABUSE RESISTANT GYPSUM WALLBOARD SHALL BE UTILIZED IN CORRIDORS, VESTIBULES, AND LOBBIES.

2) FOR ENTRY MAT (EM) DETAIL, REFER TO DWG. A-502.

3) FLOOR SHALL RECIEVE NONSLIP FLOOR SEALER.

4) FOR WIRE MESH PARTITION DETAIL, REFER TO DWG.A-503.

5) CERAMIC MOSAIC TILE (CMT) AND QUARRY TILE (QT) FLOORING SHALL HAVE UNGLAZED NON-SLIP FLOOR FINISH.

6) REFER TO SPEC. SECTIONS 09915 AND 09900. (TYPICAL)

7) ALL MANUFACTURER'S COLORS, PATTERNS & TYPE INDICATED ARE FOR REFERENCE PURPOSES ONLY. THE REFERENCES ARE USED TO INDICATE THE INTENDED TYPE, DETAIL, COLOR AND PATTERN. IT IS NOT INTENDED TO LIMIT THE SELECTION OF OTHER MANUFACTURERS PRODUCTS OF SIMILAR TYPE, DETAIL, COLOR & PATTERN. FINAL COLOR SELECTIONS SHALL BE SUBMITTED TO AND APPROVED BY THE FORT DRUM RESIDENT OFFICE.(TYPICAL)

8) GROUT, GT-1, SHALL BE USED IN AREAS WITH CERAMIC TILE AND GROUT, GT-2, SHALL BE USED IN AREAS WITH QUARRY TILE.

MATERIALS LEGEND

FINISH	MANUFACTURER	COLLECTION/MODEL NUMBER	COLOR
VCT-1	ARMSTRONG	EXCELON 51873	FORTRESS WHITE 51839
RB-1	JOHNSONITE	RUBBER WALL BASE	THUNDER #168
RB-2	JOHNSONITE	RUBBER WALL BASE	BUTTERNUT #146
ACT-1	ARMSTRONG	FINE FISSURED 1728M	WHITE (WH)
ACT-2	ARMSTRONG	FINE FISSURED 1821M	WHITE (WH)
QT-1	AMERICAN OLEAN	QUARRY TILE	SMOKED GRAY Q54
CMT-1	AMERICAN OLEAN	UNGLAZED CERAMIC MOSAICS	BEACH TAN A20
CMT-2	AMERICAN OLEAN	UNGLAZED CERAMIC MOSAICS	BUFF GRANITE A52
CT-1	AMERICAN OLEAN	BRIGHT	BRIGHT LINEN 07
GT-1	MAPEI	KERAPROXY	IVORY 39
GT-2	MAPEI	KERAPROXY	SILVER 27
CPT-1	CAMBRIDGE COMMERCIAL	WYNFORD III	NUTSHELL 2802
PT-1	GLIDDEN	OFF-WHITE PALETTE	NORTH STAR 67YY 89/124
PT-2	GLIDDEN	BRIGHT PALETTE	MACADAMIA WHITE 30YY 75/145
PT-3	GLIDDEN	INTERIOR READY-MIX	EGRET 39YY 85/046
PT-4	PRECOAT METALS		SURREY BEIGE 618L448
PT-5	PRECOAT METALS		SEAL BROWN 618D474
PT-6	GLIDDEN	CLEAN PALETTE	SUMMER STRAW 30YY 61/300
PT-7	GLIDDEN	MUTED PALETTE	ALMOST PINK 70RR 83/040
PT-8	GLIDDEN	HISTORICAL PALETTE	LAKE GEORGE 50BG 71/049
PLAM-1	WILSONART	ABSTRACTS	NAVY LEGACY 4651-60 (107HW)
PLAM-2	WILSONART	ABSTRACTS	NEUTRAL GLACE 4143-60 (107HW)
EM-1	C/S GROUP	PEDIGROUP	9322 SLATE
TP-1	BRADLEY	MILLS PARTITIONS	DESERT STONE S406

US Army Corps of Engineers New York District

U.S. ARMY ENGINEER DISTRICT CORPS OF ENGINEERS NEW YORK, NEW YORK

FORCE MODERNIZATION EDUCATION /TRANSITIONAL FACILITY FORT DRUM, NEW YORK

FINISH SCHEDULE

Sheet reference number: A-600

Submitted by: e3endnsh
S:\filer_oom\military\Fort Drum\ForceMOD\Architectural\ForceMOD057708_A-600xxx.dgn
Plot Date: 09-AUG-2005 12:16

DOOR SCHEDULE

ROOM NAME	DOOR NO.	DOOR ELEV.	DOOR MATL.	DOOR SIZE (mm) W	DOOR SIZE (mm) H	DOOR SIZE (mm) T	DOOR FIRE RATED	FRAME ELEV.	FRAME MAT'L.	FRAME HEAD	FRAME JAMB	FRAME SILL	FRAME FIRE RATED	HDW * SET NO.	REMARKS
VESTIBULE	101	E	ALUM.	2-900	2100	45	—	1	ALUM.	H3	J1	S1	—	11	
CORRIDOR	102	E	ALUM.	2-900	2100	45	—	1	ALUM.	H2	J2	S2	—	11	
CORRIDOR	103	F	H.M.	900	2100	45	1 HR	1	H.M.	H2	J2	S1	1 HR	3	WIRE GLASS IN DOOR
CORRIDOR	103A	F	H.M.	900	2100	45	1 HR	1	H.M.	H2	J2	S1	1 HR	3	WIRE GLASS IN DOOR
BREAK ROOM	104	F	H.M.	900	2100	45	—	1	H.M.	H2	J2	S2	—	1	WIRE GLASS IN DOOR
CONFERENCE RM	105	A	H.M.	2-900	2100	45	—	2	H.M.	H2	J2	S2	—	2	
VEH. CLASSRM.	106	F	H.M.	3048	3658	45	—	2	H.M.	H3	J1	S1	—	1	WIRE GLASS IN DOOR
VEH. CLASSRM.	106A	F	H.M.	3048	3658	45	—	1	H.M.	H3	J1	S1	—	1	
VEH. PROCESS.	107-OH-1	D	STL	3658	4267	45	—	—	STL	H2	J2	S4	—	—	MOTOR OPERATED
VEH. PROCESS.	107-OH-2	D	STL	3658	4267	45	—	—	STL	H2	J2	S4	—	—	MOTOR OPERATED
VEH. PROCESS.	107-OH-3	D	STL	3658	4267	45	—	—	STL	H2	J2	S4	—	—	MOTOR OPERATED
VEH. PROCESS.	107-OH-4	D	STL	3658	4267	45	—	—	STL	H2	J2	S4	—	—	MOTOR OPERATED
VEH. PROCESS.	107-OH-5	D	STL	3658	4267	45	—	—	STL	H2	J2	S4	—	—	MOTOR OPERATED
VEH. PROCESS.	107-OH-6	D	STL	3658	4267	45	—	—	STL	H2	J2	S4	—	—	MOTOR OPERATED
VEH. PROCESS.	107-OH-7	D	STL	3658	4267	45	—	—	STL	H2	J2	S4	—	—	MOTOR OPERATED
VEH. PROCESS.	107-OH-8	D	STL	3658	4267	45	—	—	STL	H2	J2	S4	—	—	MOTOR OPERATED
VEH. PROCESS.	107-OH-9	D	STL	3658	4267	45	—	—	STL	H2	J2	S4	—	—	MOTOR OPERATED
VEH. PROCESS.	107-OH-10	D	STL	3658	4267	45	—	—	STL	H2	J2	S4	—	—	MOTOR OPERATED
VEH. PROCESS.	107	F	H.M.	900	2100	45	—	1	H.M.	H3	J1	S2	—	1	
VEH. PROCESS.	107A	F	H.M.	900	2100	45	—	1	H.M.	H3	J1	S2	—	1	
STORAGE	108	A	H.M.	900	2100	45	—	1	H.M.	H2	J2	S1	—	6	
TOOL ROOM	109	A	H.M.	900	2100	45	1 HR	1	H.M.	H2	J2	S1	1 HR	6	
JANITOR CLOSET	110	A	H.M.	900	2100	45	—	1	H.M.	H2	J2	S1	—	6	
MEN'S ROOM	111	A	H.M.	900	2100	45	—	1	H.M.	H2	J2	S3	—	7	
WOMEN'S ROOM	112	A	H.M.	900	2100	45	—	1	H.M.	H2	J2	S3	—	7	
COMM. ROOM	113	A	H.M.	900	2100	45	—	1	H.M.	H2	J2	S1	—	6	
ELECTRICAL RM.	114	B	H.M.	2-900	2100	45	1 1/2 HR	2	H.M.	H3	J1	S2	1 1/2 HR	2	
MECHANICAL RM.	115	B	H.M.	2-900	2100	45	1 1/2 HR	2	H.M.	H3	J1	S2	1 1/2 HR	2	
ARMS VAULT	116	-	H.M.	2-1200	3000	45	—	2	H.M.	—	—	—	—	6	SEE DWG. A-603 & SPEC. SECTION 11020 GSA APPROVED CLASS 5 ARMS DOOR
WAREHOUSE	117	F	H.M.	900	2100	45	—	1	H.M.	H3	J1	S2	—	1	
WAREHOUSE	117A	F	H.M.	900	2100	45	—	1	H.M.	H3	J1	S2	—	1	
WAREHOUSE	OH-11	D	STL	2700	2700	45	—	-	STL	H2	J2	S4	—	—	MOTOR OPERATED- OVERHEAD DOOR
WAREHOUSE	OH-12	D	STL	2700	2700	45	—	-	STL	H2	J2	S4	—	—	MOTOR OPERATED- OVERHEAD DOOR
WAREHOUSE	OH-13	D	STL	2700	3658	45	—	-	STL	H2	J2	S4	—	—	MOTOR OPERATED- OVERHEAD DOOR
WAREHOUSE	OH-14	D	STL	2700	3658	45	—	-	STL	H2	J2	S4	—	—	MOTOR OPERATED- OVERHEAD DOOR
CORRIDOR	119	C	H.M.	2-900	2100	45	—	2	H.M.	H2	J2	S1	—	4	WIRE GLASS IN DOOR
CORRIDOR	119A	C	H.M.	2-900	2100	45	—	2	H.M.	H2	J2	S1	—	4	WIRE GLASS IN DOOR
CORRIDOR	119B	C	H.M.	2-900	2100	45	—	2	H.M.	H2	J2	S1	—	4	WIRE GLASS IN DOOR
ENTRY DOOR	120A	E	ALUM.	2-900	2100	45	—	2	ALUM.	H3	J1	S1	—	11	
LOBBY	120B	C	H.M.	2-900	2100	45	—	2	H.M.	H2	J2	S1	—	10	WIRE GLASS IN DOOR
STAIR # 1	121	F	H.M.	2-900	2100	45	1 HR	1	H.M.	H1	J3	S1	1 HR	5	WIRE GLASS IN DOOR
OFFICE	122	F	H.M.	900	2100	45	—	1	H.M.	H2	J2	S1	—	2	
OFFICE	123	F	H.M.	900	2100	45	—	1	H.M.	H2	J2	S1	—	2	5X 20 VISION PANEL (C FIRE RATING)
COPY ROOM	124	F	H.M.	900	2100	45	—	1	H.M.	H2	J2	S1	—	3	5X 20 VISION PANEL (C FIRE RATING)
OFFICE	126	F	H.M.	900	2100	45	—	1	H.M.	H2	J2	S1	—	2	5X 20 VISION PANEL (C FIRE RATING)
OFFICE	127	F	H.M.	900	2100	45	—	1	H.M.	H2	J2	S1	—	2	5X 20 VISION PANEL (C FIRE RATING)
OFFICE	128	F	H.M.	900	2100	45	—	1	H.M.	H2	J2	S1	—	2	
OFFICE	129	F	H.M.	900	2100	45	—	1	H.M.	H2	J2	S1	—	2	
OFFICE	130	F	H.M.	900	2100	45	—	1	H.M.	H2	J2	S1	—	2	
OFFICE	131	F	H.M.	900	2100	45	—	1	H.M.	H2	J2	S1	—	2	
STAIR # 2	132	F	H.M.	900	2100	45	1 HR	1	H.M.	H3	J1	S1	1 HR	5	WIRE GLASS IN DOOR
LOCKER ROOM	133	A	H.M.	900	2100	45	—	1	H.M.	H2	J2	S1	—	7	

LOUVER SCHEDULE

LOUVER NO	SIZE WIDTH	SIZE HEIGHT	SIZE THICKNESS	MATERIAL	TYPE	DETAILS HEAD	DETAILS JAMB	DETAILS SILL	REMARKS
LV-1	6000	1200	100	ALUMINUM	FIXED	SEE DETAIL 3, ON DWG. A-602 PROVIDE PREFIN. INSUL. METAL PANEL BEHIND INACTIVE LOUVER AS PER MECHANICAL REQUIREMENT (TYP)			
LV-2	16600	1200	100	ALUMINUM	FIXED				
LV-3	700	700	100	ALUMINUM	FIXED				
LV-4	1000	900	100	ALUMINUM	FIXED				
LV-5	2400	1200	100	ALUMINUM	FIXED				
LV-6	500	500	100	ALUMINUM	FIXED				
LV-7	1000	400	100	ALUMINUM	FIXED				

(*) SEE SPECIFICATION SECTION 08710 FOR DOOR HARDWARE REQUIREMENTS

1. LOUVER DETAILS AND INSTALLATION PER MANUFACTURERS STANDARDS.
2. PAINT LOUVERS AND FRAMING TO MATCH ADJACENT FINISHED SURFACE COLOR OF WALL, ETC.

DOOR ELEVATIONS

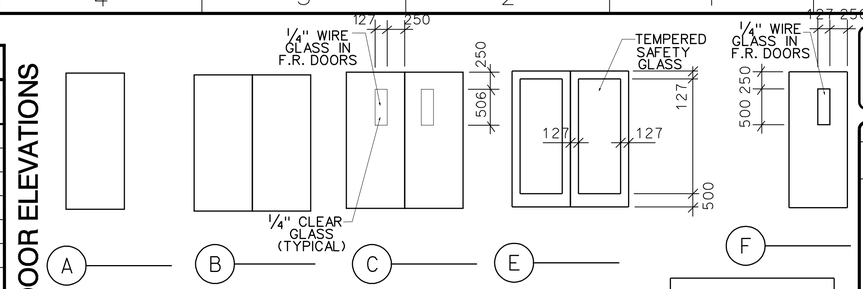

FRAME ELEVATIONS

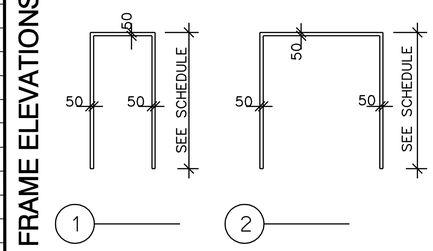

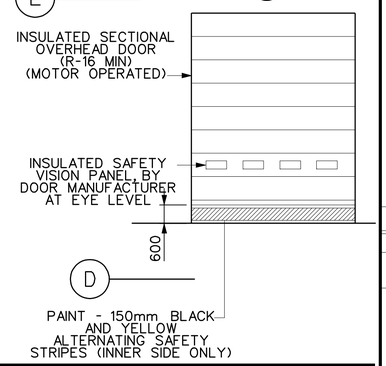

HEAD DETAILS

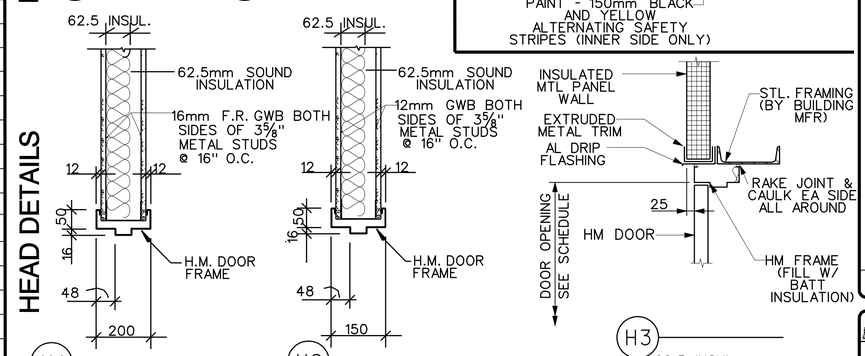

JAMB DETAILS

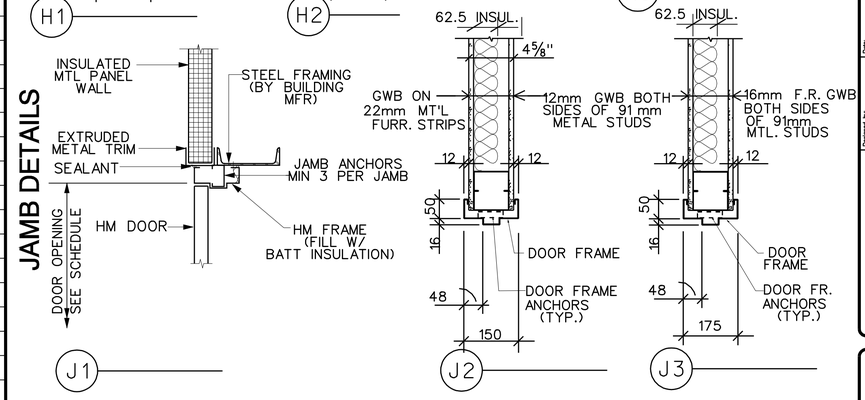

SILL DETAILS

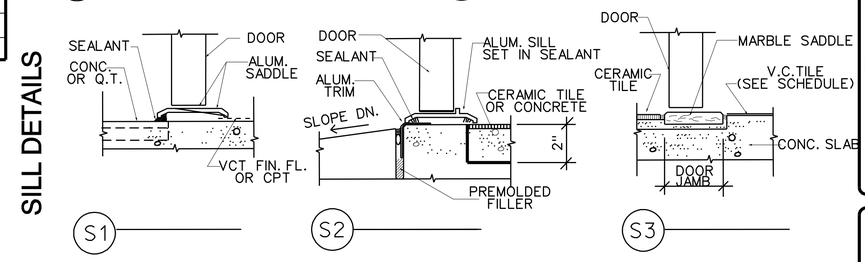

ALL DIMENSIONS ARE SHOWN IN MILLIMETERS

US Army Corps of Engineers New York District

U.S. ARMY ENGINEER DISTRICT CORPS OF ENGINEERS NEW YORK, NEW YORK

FORCE MODERNIZATION EDUCATION / TRANSITIONAL FACILITY FORT DRUM, NEW YORK

DOOR & LOUVER SCHEDULE AND DETAILS

Sheet reference number: A-601

Plot Date: 09-AUG-2005 12:16
Submitted by: e3endnsh
S:\fileroom\military\Fort Drum\ForceMOD\Architectural\ForceMOD577708_A-601xxx.dgn

DOOR SCHEDULE

DOOR								FRAME						HDW	REMARKS
ROOM NAME	DOOR NO.	ELEV.	MATL.	SIZE (mm) W	H	T	FIRE RATED	ELEV.	MAT'L.	HEAD	JAMB	SILL	FIRE RATED	(*) SET NO.	
ELEVATOR MACHINE RM.	134	A	H.M.	900	2100	45	3/4 HR	1	H.M.	H2	J2	S1	3/4 HR	6	
OFFICE	135	A	H.M.	900	2100	45	—	1	H.M.	H2	J2	S1	-	2	
STAIR # 1	201	F	H.M.	2-900	2100	45	1 HR	1	H.M.	H1	J3	S1	1 HR	5	WIRE GLASS IN DOOR
ELECTRICAL CLOSET	203	A	H.M.	2-900	2100	45	—			H2	J2	S1	-	6	LOUVER
CLASSROOM	205	F	H.M.	900	2100	45	—					S1	-	2	5X 20 VISION PANEL (C FIRE RATING)
COMM. CLOSET	206	A	H.M.	900	2100	45	—					S1	-	6	
CLASSROOM	207	F	H.M.	900	2100	45	—					S1	-	2	5X 20 VISION PANEL (C FIRE RATING)
CLASSROOM	208	F	H.M.	900	2100	45	—					S2	-	2	5X 20 VISION PANEL (C FIRE RATING)
CLASSROOM	209	F	H.M.	900	2100	45	—					S1	-	2	5X 20 VISION PANEL (C FIRE RATING)
WOMEN'S TOILET	211	A	H.M.	900	2100	45	—					S1	-	3	
MEN'S ROOM	212	A	H.M.	900	2100	45	—					S1	-	3	
OFFICE	213	F	H.M.	900	2100	45	—					S1	-	2	5X 20 VISION PANEL (C FIRE RATING)
JANITOR CLOSET	214	A	H.M.	900	2100	45	—					S1	-	3	
OFFICE	215	F	H.M.	900	2100	45	—					S1	-	2	5X 20 VISION PANEL (C FIRE RATING)
CONFERENCE ROOM	216	F	H.M.	900	2100	45	—					S1	-	2	5X 20 VISION PANEL (C FIRE RATING)
OFFICE	217	A	H.M.	900	2100	45	—					S1	-	2	5X 20 VISION PANEL (C FIRE RATING)
STORAGE	218	A	H.M.	2-900	2100	45	—					S1	-	6	
BREAK ROOM	219	F	H.M.	2-900	2100	45	—					S1	-	1	
STAIR # 2	220	F	H.M.	2-900	2100	45	1 HR			H1	J3	S1	1 HR	5	WIRE GLASS IN DOOR
STAIR # 1	301	F	H.M.	900	2100	45	1 HR	1	H.M.	H1	J3	S1	1 HR	5	WIRE GLASS IN DOOR
ATTIC (SERVICE DOOR)	302	-	STL.	915	2185		1 HR	HM	-	-	-	-	1 HR	6	MECHANICAL SERVICE DOOR

(*)1. SEE SPECIFICATION SECTION 08710 FOR DOOR HARDWARE REQUIREMENTS

SEE NOTE 1

6 mm NOMINAL LAMINATED GLASS, CONSISTS OF 2 NOMINAL 3 mm GLASS PANES BONDED TOGETHER W/A MIN. OF A 75mm POLYVINYL-BUTYRAL (PVB) INTERLAYER PROTECTED W/WINDOW FILM "STERLING 40"

WINDOW SCHEDULE

WINDOW TYPE	OPENING SIZE WIDTH	HEIGHT	FRAME MATERIAL	GLAZING	REMARKS
1	4500	1235	ALUMINUM	LAMINATED	COMPLY W/UFC-4-010-01. SEE NOTE 1.
2	2276	1235	ALUMINUM	LAMINATED	COMPLY W/UFC-4-010-01. SEE NOTE 1.
3	900	1235	ALUMINUM	DOUBLE GLAZED	SEE SPECIFICATION, FOR SERVICE & INFORMATION WINDOW

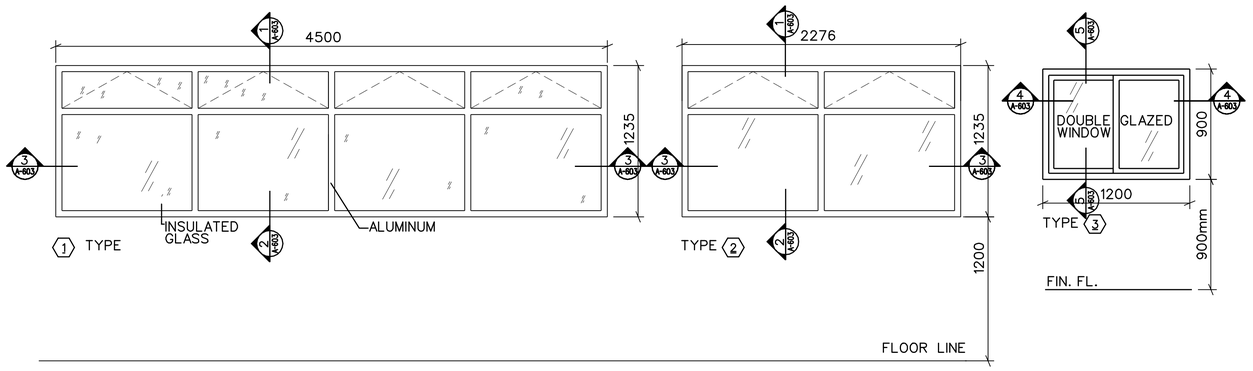

2 WINDOW TYPES
A101 A602 SCALE: 1:25

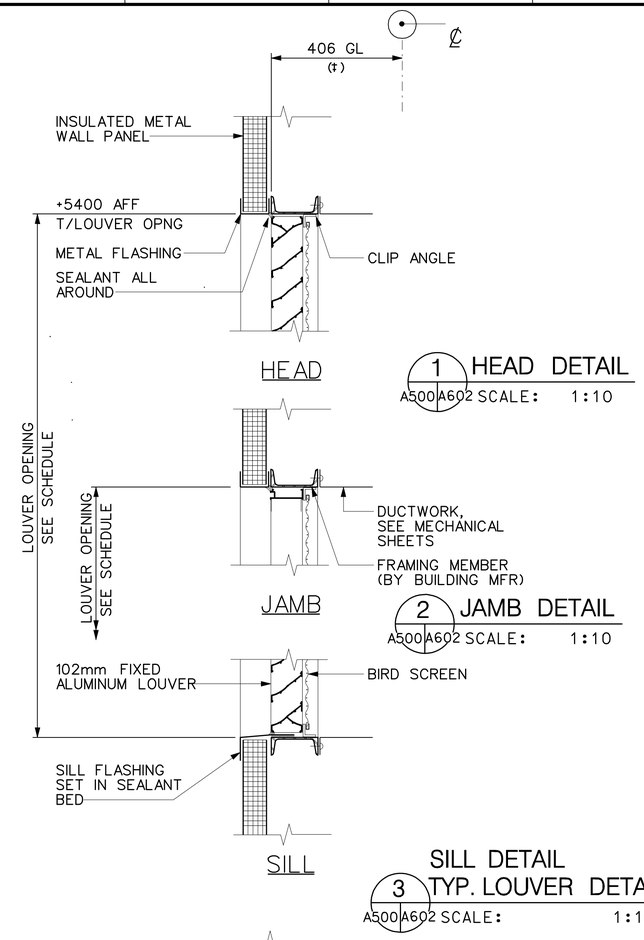

1 HEAD DETAIL
A500 A602 SCALE: 1:10

2 JAMB DETAIL
A500 A602 SCALE: 1:10

3 SILL DETAIL TYP. LOUVER DETAILS
A500 A602 SCALE: 1:10

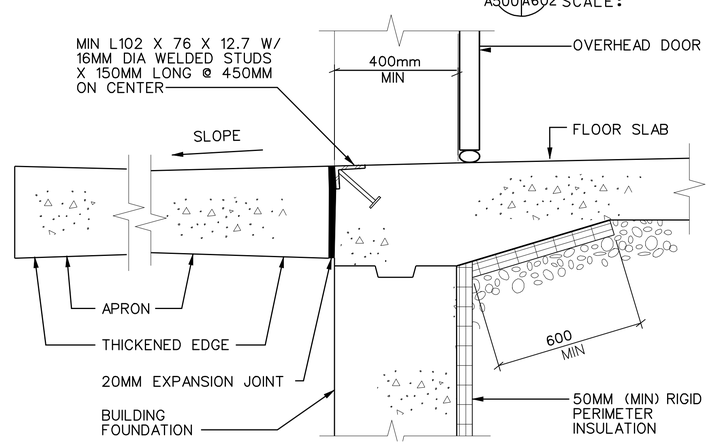

S4 SILL DETAIL AT OVERHEAD VEHICLE DOORS
A601 A602 SCALE: 1:10

ALL DIMENSIONS ARE SHOWN IN MILLIMETERS

US Army Corps of Engineers New York District

U.S. ARMY ENGINEER DISTRICT CORPS OF ENGINEERS NEW YORK, NEW YORK

Designed by: Dwn by: Ckd by: Reviewed by: Submitted by: Date: Solicitation no.: Contract no.: Plot date: 09-AUG-2005 12:16 Plot scale: 1:1 Size: A1 Code: 1XXXXX1XXXXX

FORCE MODERNIZATION EDUCATION TRANSITIONAL FACILITY FORT DRUM, NEW YORK

DOOR & WINDOW SCHEDULE & DETAILS

Sheet reference number: A-602

Plot Date: 09-AUG-2005 12:16
Submitted by: e3endnsh
s:\fileroom\military\Fort Drum\ForceMOD\Architectural\ForceMOD57708_A-602xxx.dgn

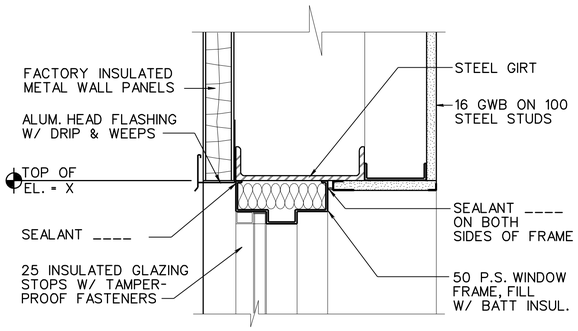

1 WINDOW HEAD DETAIL
A602 A603 SCALE: 1:5

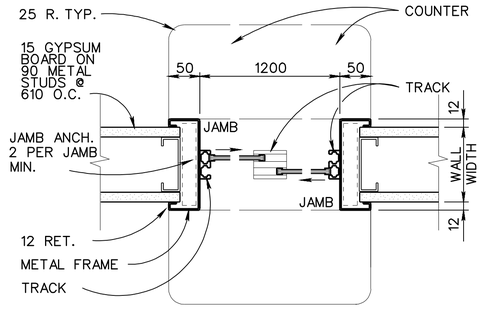

4 SERVICE WINDOW SECTION
A602 A603 SCALE: 1:5

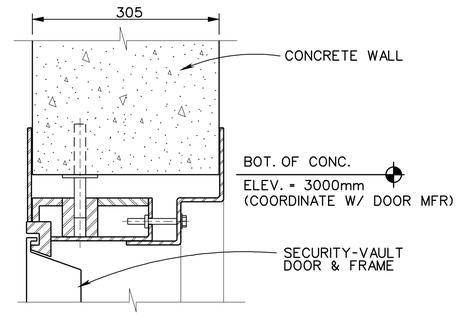

7 ARMS VAULT DOOR HEAD
A603 A603 SCALE: 1:5

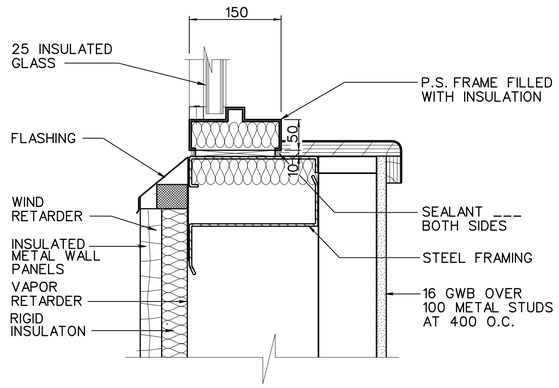

2 WINDOW SILL DETAIL
A602 A603 SCALE: 1:5

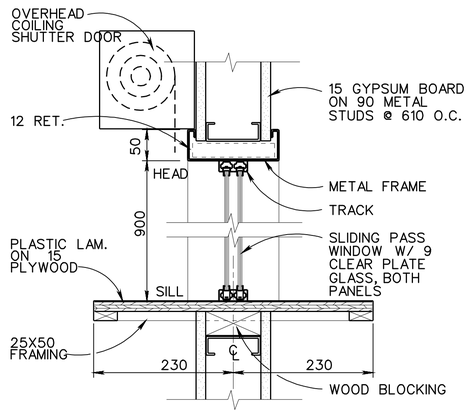

5 SERVICE WINDOW SILL
A602 A603 SCALE: 1:5

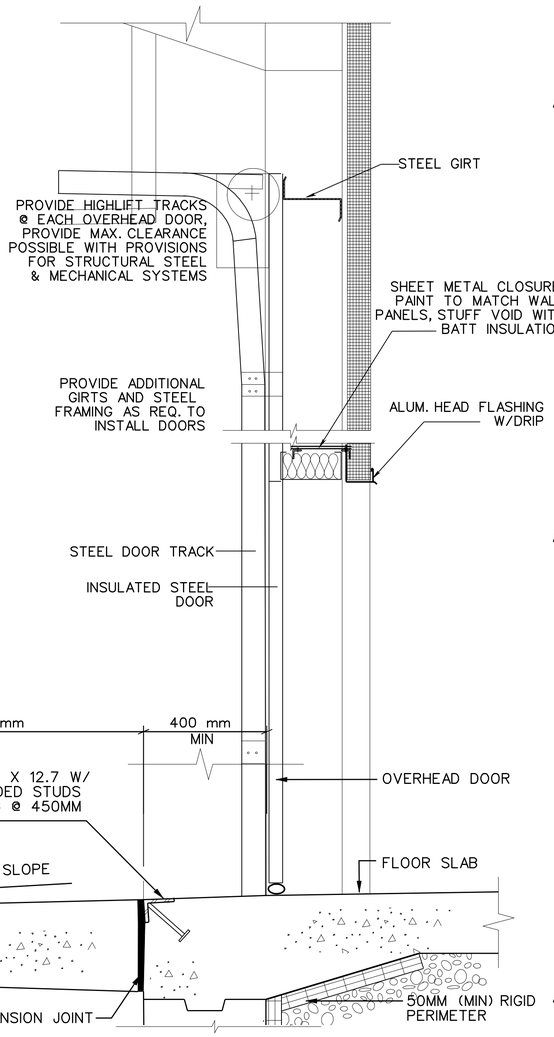

6 O.H. DOOR HEAD
A601 A603 SCALE: N.T.S.

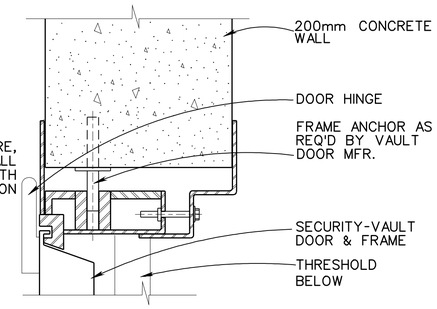

8 ARMS VAULT DOOR JAMB
A603 A603 SCALE: 1:5

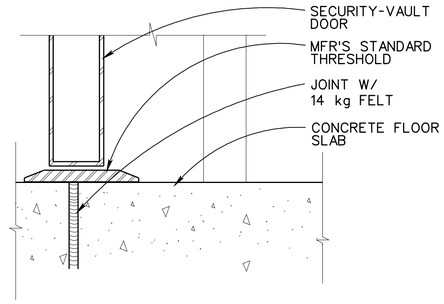

9 ARMS VAULT DOOR SILL
A603 A603 SCALE: 1:5

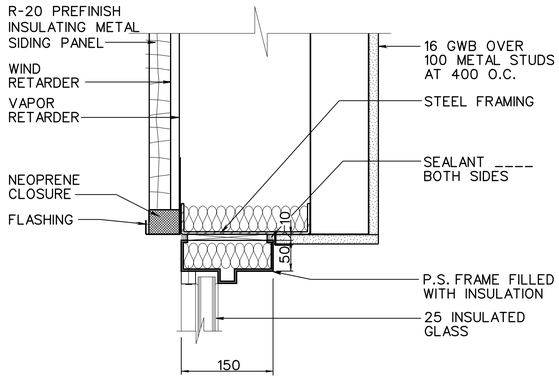

3 WINDOW JAMB DETAIL
A602 A603 SCALE: 1:5

ALL DIMENSIONS ARE SHOWN IN MILLIMETERS

US Army Corps of Engineers
New York District

Mark	Description	Date	Appr.

Designed by: | Date: | Date: | Date:
Dwn by: | Ckd by: | Solicitation no.:
Reviewed by: | Contract no.:
Submitted by: | File date: 09-AUG-2005 12:16 | Plot date: 09-AUG-2005 | Plot scale: 1:20000/1:30000

U.S. ARMY ENGINEER DISTRICT
CORPS OF ENGINEERS
NEW YORK, NEW YORK

File name: S:\Manuel military\Fort Drum\Fort Drum\Architectural\Drum\A-603xxx.dgn

PN 57708
FORCE MODERNIZATION EDUCATION (TRANSITIONAL FACILITY)
FORT DRUM, NEW YORK

DOOR & WINDOW DETAILS

Sheet reference number:
A–603

Submitted by: e3endnsh
S:\filer-room\military\Fort Drum\ForceMOD\Architectural\ForceMOD57708_A-603xxx.dgn
Plot Date: 09-AUG-2005 12:16

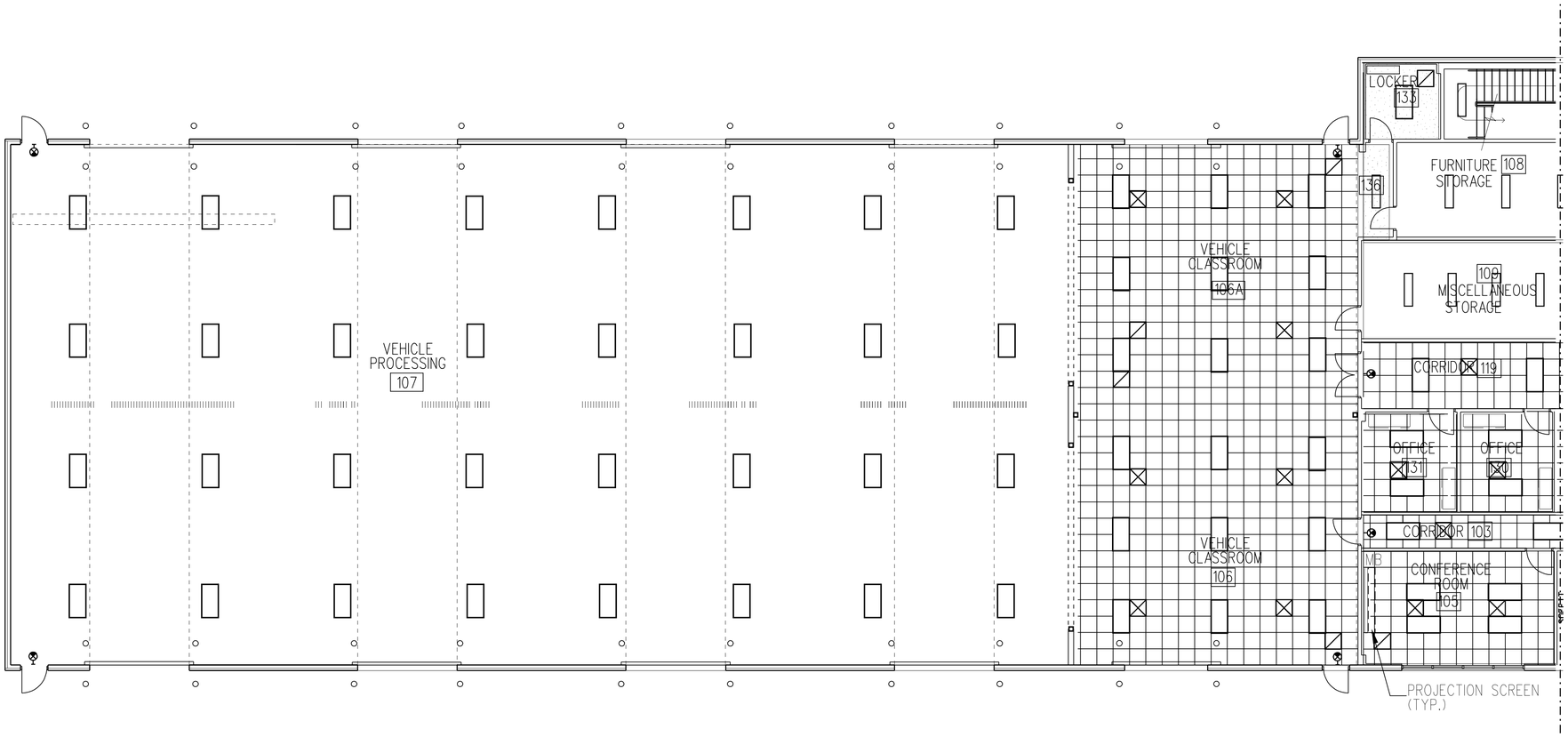

1A / A901 FIRST FLOOR PLAN–REFLECTED CEILING

SCALE 1:100

LEGEND

- 600x1200 FLUORESCENT LIGHT FIXTURE
- 300x1200 INDUSTRIAL FLUORESCENT LIGHT FIXTURE
- 300x1200 SUSPENDED LIGHT FIXTURES
- WALL MOUNTED EXTERIOR LIGHT FIXTURE
- RECESSED DOWNLIGHT
- ILLUMINATED EXIT SIGN
- CEILING RECESSED PROJECTION SCREEN
- 600x600 ACOUSTICAL CEILING TILE
- GYPSUM WALLBOARD CEILING
- SUPPLY, SEE MECHANICAL DRAWINGS
- RETURN, SEE MECHANICAL DRAWINGS

GENERAL NOTES

1. REFER TO ELECTRICAL DRAWINGS FOR LIGHTING INFORMATION.

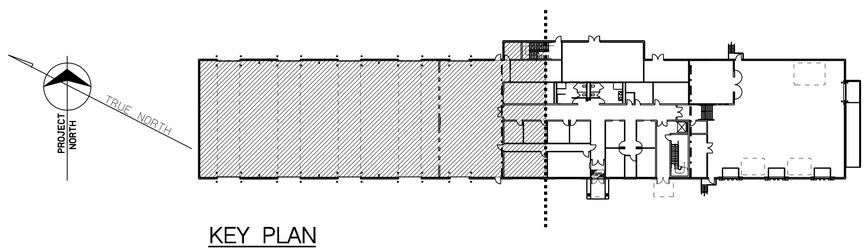

KEY PLAN

SCALE 1:500

0 2000 4000 10000

SCALE: 1:100

ALL DIMENSIONS ARE IN MILLIMETERS

US Army Corps of Engineers
New York District

U.S. ARMY ENGINEER DISTRICT
CORPS OF ENGINEERS
NEW YORK, NEW YORK

Designed by: | Date: | Size: | No.
Dwn by: | Ckd by: | Solicitation no.:
Reviewed by: | Contract no.:
Submitted by: | Plot date: 09-AUG-2005 12:16 | Plot by: e3endnsh | Scale: 1:00000/1:00000
File name: S:\Resources\Military\Fort Drum\Force\CD\Architectural\Force\CD\700_A-700xxx.dgn

FORCE MODERNIZATION: EDUCATION TRANSITIONAL FACILITY
FORT DRUM, NEW YORK

FIRST FLOOR PLAN
REFLECTED CEILING

Sheet reference number:
A–700

Submitted by: e3endnsh
S:\fileroom\military\Fort Drum\Force\MOD\Architectural\ForceMOD\57708_A-700xxx.dgn
Plot Date: 09-AUG-2005 12:16

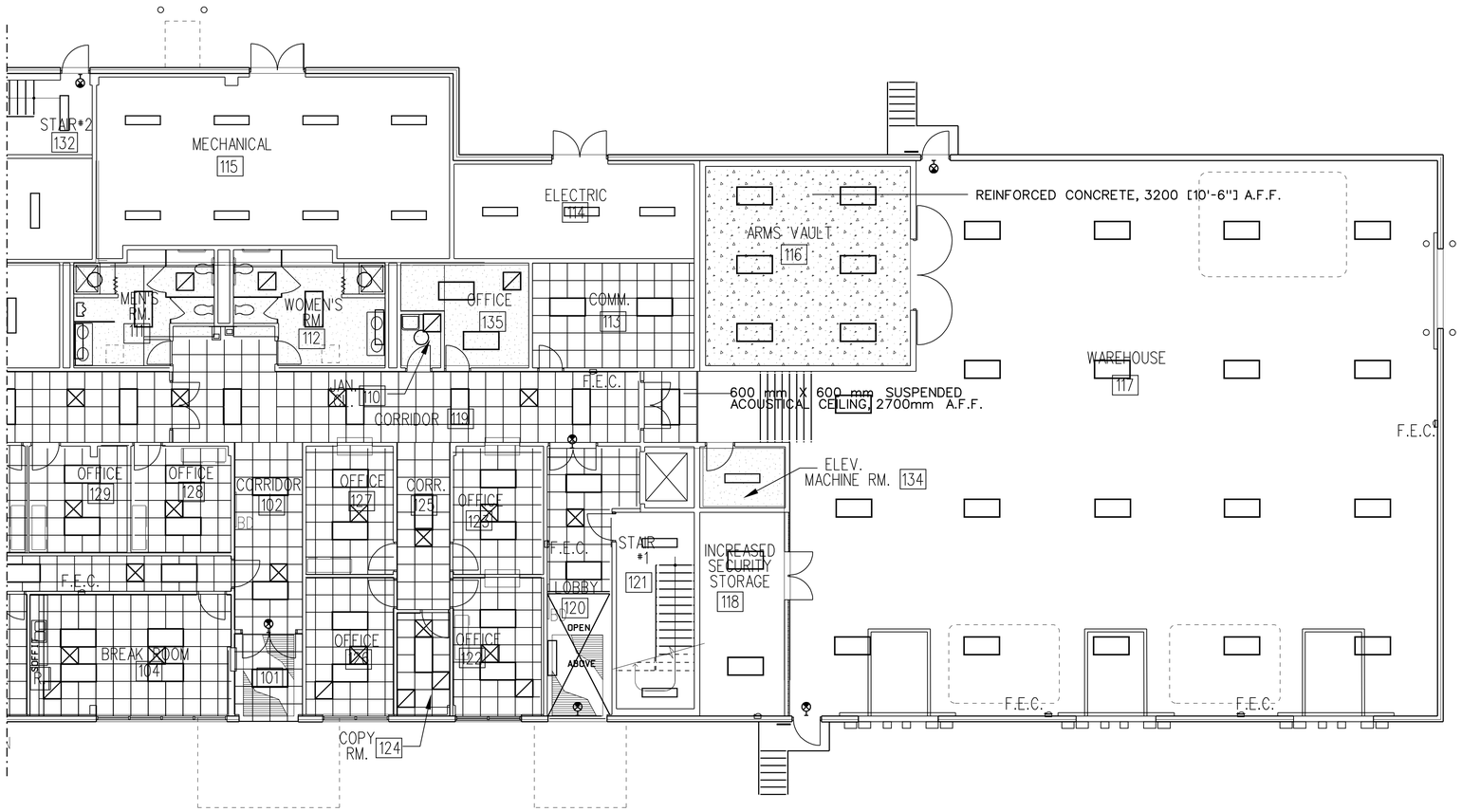

1
A701

FIRST FLOOR PLAN (CONTINUED)
REFLECTED CEILING
SCALE 1:100

LEGEND

- 600x1200 FLUORESCENT LIGHT FIXTURE
- 300x1200 INDUSTRIAL FLUORESCENT LIGHT FIXTURE
- 300x1200 SUSPENDED LIGHT FIXTURES
- WALL MOUNTED EXTERIOR LIGHT FIXTURE
- RECESSED DOWNLIGHT
- ILLUMINATED EXIT SIGN
- CEILING RECESSED PROJECTION SCREEN
- 600x600 ACOUSTICAL CEILING TILE
- GYPSUM WALLBOARD CEILING
- SUPPLY, SEE MECHANICAL DRAWINGS
- RETURN, SEE MECHANICAL DRAWINGS

GENERAL NOTES

1. REFER TO ELECTRICAL DRAWINGS FOR LIGHTING INFORMATION.

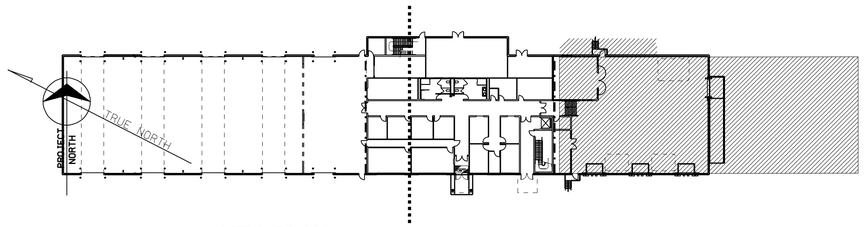

KEY PLAN
SCALE 1:500

0 2000 4000 10000
SCALE: 1:100

ALL DIMENSIONS ARE IN MILLIMETERS

US Army Corps of Engineers
New York District

U.S. ARMY ENGINEER DISTRICT
CORPS OF ENGINEERS
NEW YORK, NEW YORK

PN 57708
FORCE MODERNIZATION EDUCATION /TRANSITIONAL FACILITY
FORT DRUM, NEW YORK

FIRST FLOOR PLAN
REFLECTED CEILING

Sheet reference number:
A-701

Submitted by: e3endnsh
S:\fileroom\military\Fort Drum\ForceMOD\Architectural\ForceMOD57708_A-701xxx.dgn
Plot Date: 09-AUG-2005 12:16

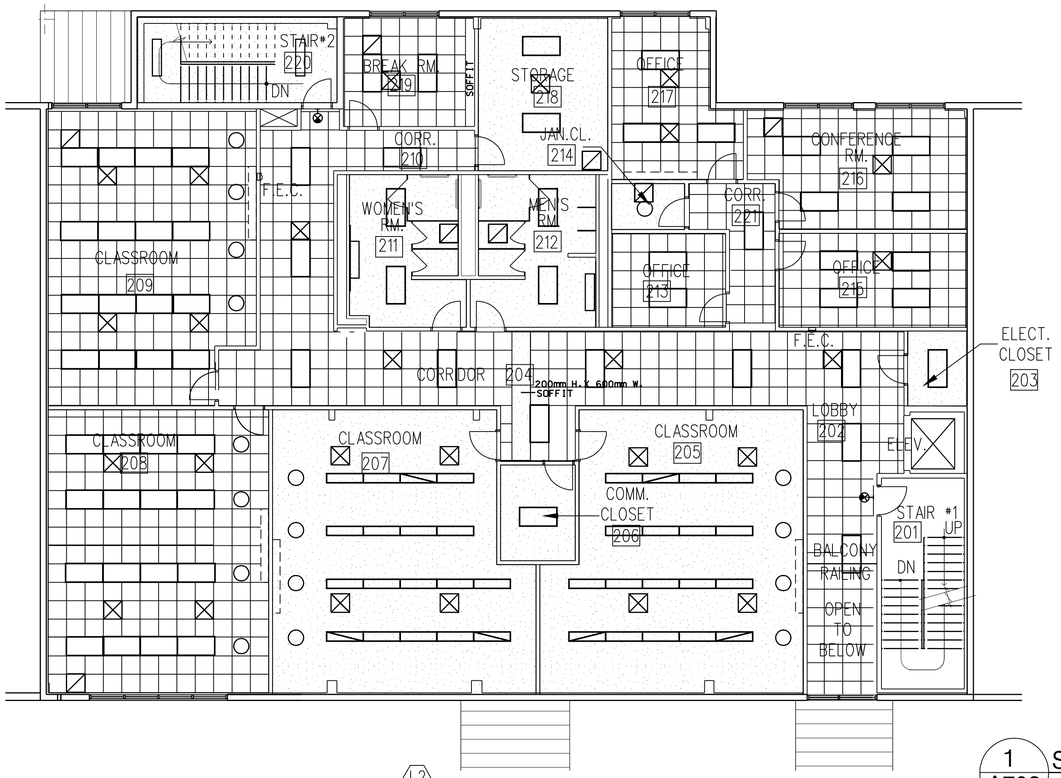

1 A702 SECOND FLOOR PLAN–REFLECTED CEILING
SCALE 1:100

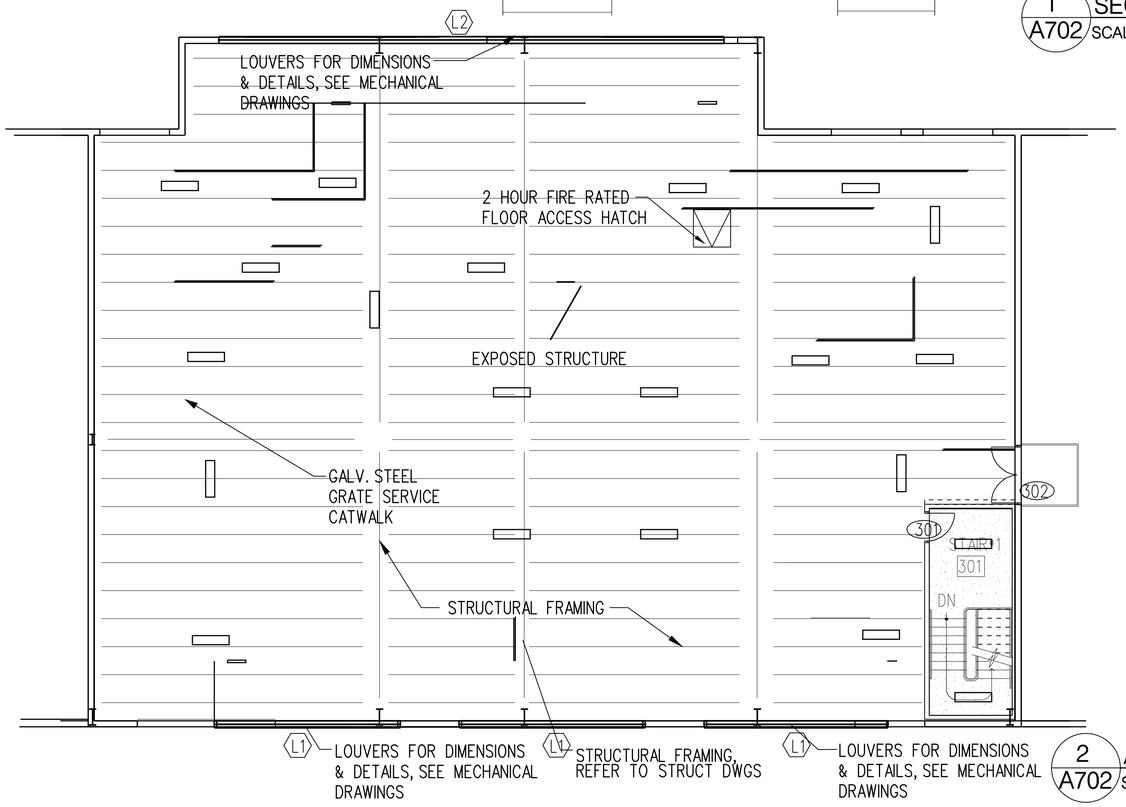

2 A702 ATTIC REFLECTED CEILING PLAN
SCALE 1:100

LEGEND

- 600x1200 FLUORESCENT LIGHT FIXTURE
- 300x1200 INDUSTRIAL FLUORESCENT LIGHT FIXTURE
- 300x1200 SUSPENDED LIGHT FIXTURES
- WALL MOUNTED EXTERIOR LIGHT FIXTURE
- RECESSED DOWNLIGHT
- ILLUMINATED EXIT SIGN
- CEILING RECESSED PROJECTION SCREEN
- 600x600 ACOUSTICAL CEILING TILE
- GYPSUM WALLBOARD CEILING
- SUPPLY, SEE MECHANICAL DRAWINGS
- RETURN, SEE MECHANICAL DRAWINGS

GENERAL NOTES

1. REFER TO ELECTRICAL DRAWINGS FOR LIGHTING INFORMATION.

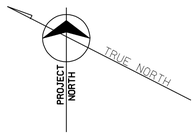

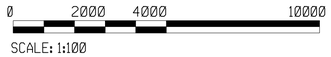

SCALE: 1:100

ALL DIMENSIONS ARE IN MILLIMETERS

US Army Corps of Engineers
New York District

U.S. ARMY ENGINEER DISTRICT
CORPS OF ENGINEERS
NEW YORK, NEW YORK

PN 57708
FORCE MODERNIZATION EDUCATION /TRANSITIONAL FACILITY
FORT DRUM, NEW YORK

SECOND FLOOR PLAN
REFLECTED CEILING

Sheet reference number:
A–702

Submitted by: e3endnsh
S:\filerooms\military\Fort Drum\ForceMOD\Architectural\ForceMOD57708_A-702xxx.dgn
Plot Date: 09-AUG-2005 12:16

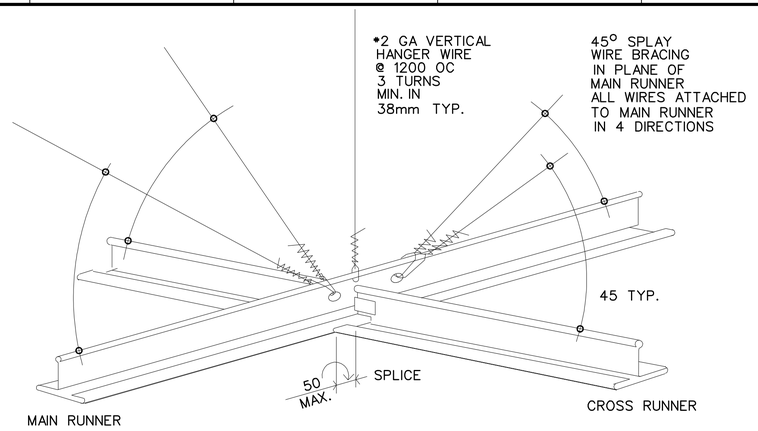

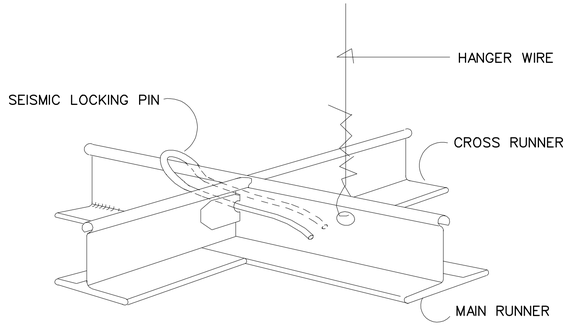

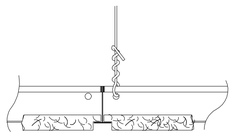

REVEAL EDGE 16mm ACT. TILE
WHERE SHOWN ON CLG PLAN

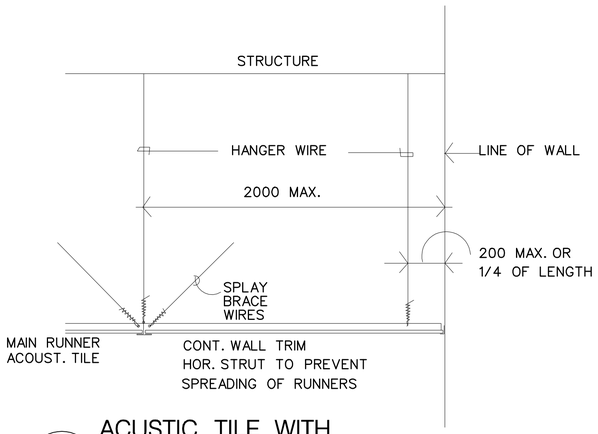

1 A703 ACUSTIC TILE WITH SEISMIC SUSPENSION
SCALE: N.T.S.

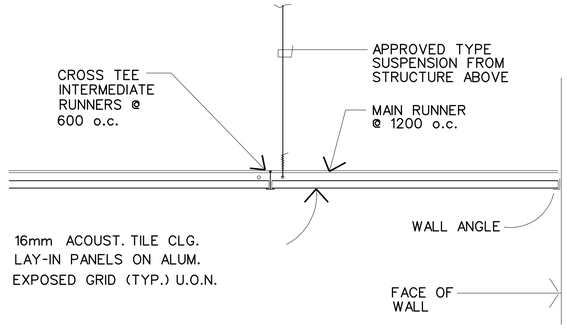

2 A703 SUSPENDED ACUSTIC TILE CEILING DETAIL
SCALE: N.T.S.

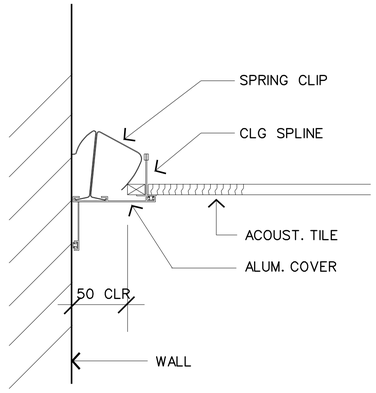

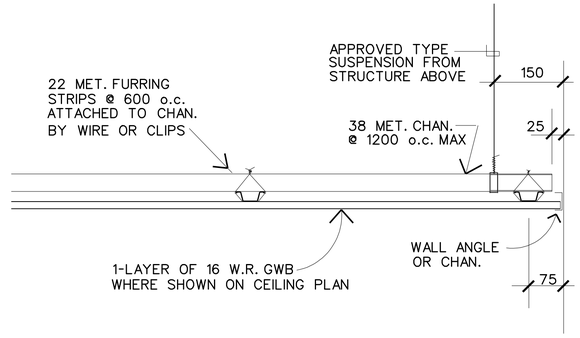

3 A703 SUSPENDED GYP. BD. CEILING DETAIL
SCALE: N.T.S.

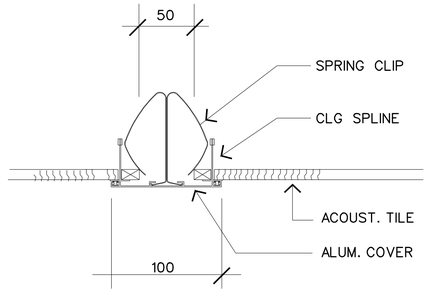

4 A703 SEISMIC CEILING JOINT COVER
SCALE: N.T.S.

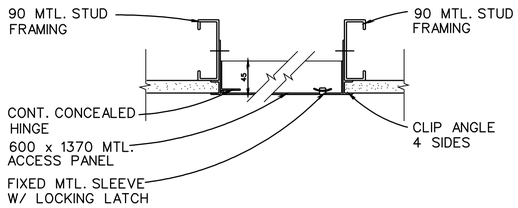

5 A703 CEILING ACCESS PANEL DETAIL
SCALE: N.T.S.

ALL DIMENSIONS ARE SHOWN
IN MILLIMETERS

US Army Corps of Engineers
New York District

Mark	Date	Description	Appr.	Mark	Date	Description	Appr.

U.S. ARMY ENGINEER DISTRICT
CORPS OF ENGINEERS
NEW YORK, NEW YORK

Designed by: | Date: | Job no:
Dwn by: | Ckd by: | Solicitation no:
Reviewed by: | Contract no:
Submitted by: | Plot date: 09-AUG-2005 12:16 | Plot by: e3endnsh | Scale: 1:00000/1:00000

File name: S:\filer-oom\military\Fort Drum\Fort\Architectural\Fort0057708_A-703xxx.dgn

FORCE MODERNIZATION EDUCATION (TRANSITIONAL FACILITY)
FORT DRUM, NEW YORK

PN 57708

SUSPENDED CEILING DETAILS

Sheet reference number:
A–703

Submitted by: e3endnsh
S:\filer-oom\military\Fort Drum\Fort\ForceMOD\Architectural\Fort0057708_A-703xxx.dgn
Plot Date: 09-AUG-2005 12:16

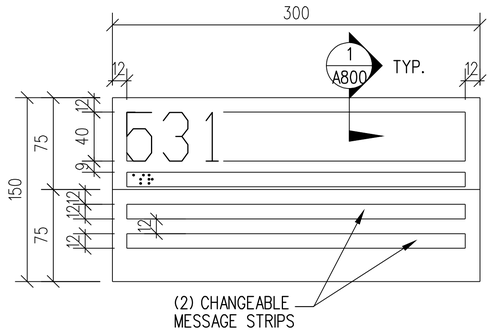

TYPE BB2

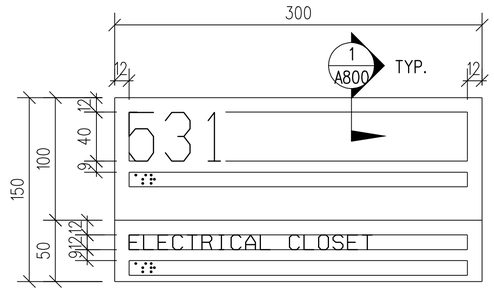

TYPE BB3

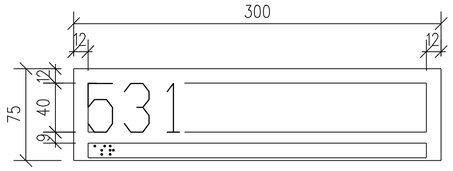

TYPE BB4

BRAILLE:

DOMED GRADE 2 BRAILLE, PLACED DIRECTLY BELOW LETTERING, FLUSH LEFT.

LETTERING:

RAISED WHITE CHARACTERS, MIN. 0.8mm, ON BLACK ACRYLIC PLEXIGLASS BACKGROUND.

ROOM NAME- 12mm UPPER CASE HELVETICA MEDIUM, FLUSH LEFT.
ROOM NUMBER-40mm NUMBERS, HELVETICA MEDIUM, FLUSH LEFT.
SECONDARY INFORMATION- UPPER AND LOWER CASE HELVETICA REGULAR, 12mm CAPITAL LETTER HEIGHT, FLUSH LEFT.

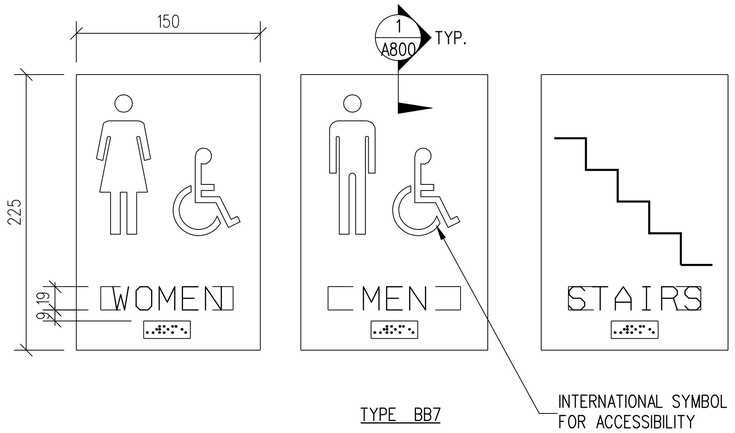

TYPE BB7

BRAILLE:

DOMED GRADE 2 BRAILLE, PLACED DIRECTLY BELOW LETTERING, CENTERED.

LETTERING:

RAISED WHITE CHARACTERS, MIN. 0.8mm, ON BLACK ACRYLIC PLEXIGLASS BACKGROUND.

ROOM NAME- 19mm UPPER CASE HELVETICA MEDIUM, CENTERED.
WHITE PICTOGRAPH ON BLACK BACKGROUND.

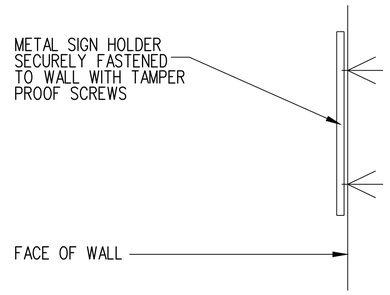

1 A800 INTERIOR SIGNAGE
SCALE 1:2.5

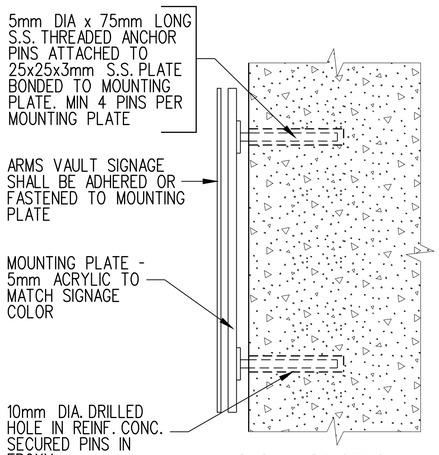

2 A800 SIGN SECTION
SCALE 1:2.5

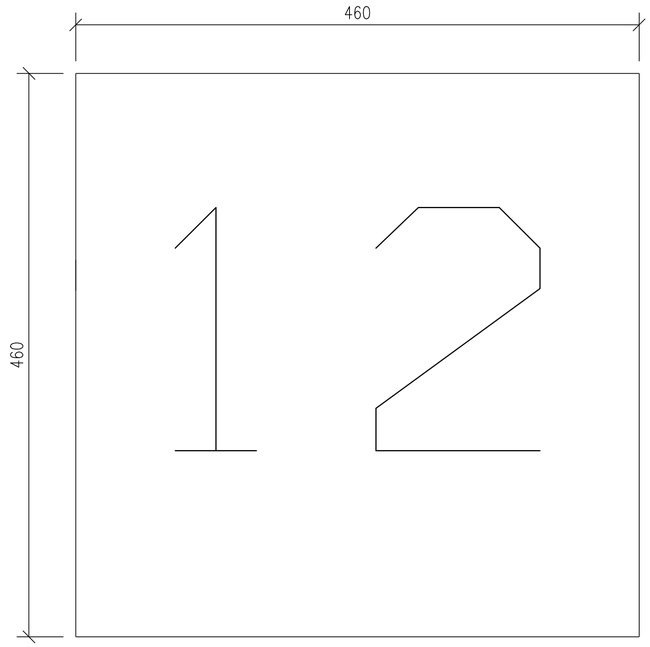

TYPE B4

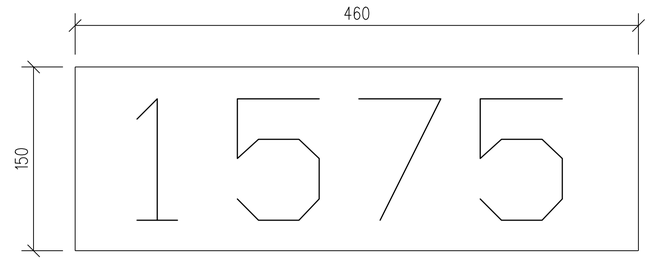

TYPE 2
(IN ACCORDANCE WITH FORT DRUM STANDARDS)

NOTES:

TYPEFACE SHALL BE HELVETICA.

BUILDING NUMBER SHALL BE STENCILED ONTO METAL SIGN FACE.

CONTRACTOR SHALL COORDINATE SIZE, COLOR, AND LOCATION FOR EXTERIOR SIGNAGE WITH THE APPROPRIATE BASE COMMAND AND THE CONTRACTING OFFICER.

US Army Corps of Engineers
New York District

U.S. ARMY ENGINEER DISTRICT
CORPS OF ENGINEERS
NEW YORK, NEW YORK

PN 57708
FORCE MODERNIZATION EDUCATION /TRANSITIONAL FACILITY
FORT DRUM, NEW YORK

INTERIOR & EXTERIOR SIGNAGE

Sheet reference number:
A-800

Submitted by: e3endnsh Plot Date: 09-AUG-2005 12:17
S:\fileroom\military\Fort Drum\ForceMOD\Architectural\ForceMOD57708_A-800xxx.dgn

INTERIOR SIGNAGE SCHEDULE

ROOM NO.	TEXT	SIGN TYPE	LOCATION	QTY.
104	BREAK ROOM	BB3	A	1
105	CONFERENCE ROOM	BB3	A	1
106	VEHICLE CLASSROOM	BB3	A	1
106A	VEHICLE CLASSROOM	BB3	A	1
108	STORAGE	BB3	A	1
109	TOOL ROOM	BB3	A	1
110	JANITOR'S CLOSET	BB3	A	1
111	MEN	BB7	A	1
112	WOMEN	BB7	A	1
116	ARMS VAULT	BB3	A	1
117	WAREHOUSE	BB3	A	1
121	STAIRS	BB7	A	1
122		BB2	A	1
123		BB2	A	1
124	COPY ROOM	BB3	A	1
126		BB2	A	1
127		BB2	A	1
128		BB2	A	1
129		BB2	A	1
130		BB2	A	1
131		BB2	A	1
133	LOCKER ROOM	BB3	A	1
134	ELEVATOR MACHINE ROOM	BB3	A	1
135		BB2	A	1
201	STAIRS	BB7	A	1
203	ELECTRICAL CLOSET	BB3	A	1
205	CLASSROOM	BB3	A	1
206	COMM. CLOSET	BB3	A	1
207	CLASSROOM	BB3	A	1
208	CLASSROOM	BB3	A	1
209	CLASSROOM	BB3	A	1
211	WOMEN	BB7	A	1
212	MEN	BB7	A	1
213		BB2	A	1
214	JANITOR'S CLOSET	BB3	A	1
215		BB2	A	1
216		BB2	A	1
217	CONFERENCE ROOM	BB3	A	1
218	STORAGE	BB3	A	1
219	BREAK ROOM	BB3	A	1
220	STAIRS	BB7	A	1

GENERAL NOTES

1. ALL ROOM SIGNS ARE ON CORRIDOR SIDE OF DOOR UNLESS OTHERWISE NOTED.

2. MOUNT SIGNS AT 1525mm O.C. ABOVE FINISHED FLOOR AT LOCATIONS INDICATED ON SCHEDULE. IF MOUNTING LOCATIONS INDICATED CANNOT BE ACHIEVED THEN MOUNT ON NEAREST ADJACENT WALL.

3. COORDINATE SIGNAGE TYPES WITH SIGNAGE SCHEDULE AND FLOOR PLANS.

4. RAISED BRAILLE TYPICAL ONLY IN AREAS ACCESSIBLE TO THE HANDICAPPED.

5. INFORMATION SHOWN ON THESE SIGNS IS FOR EXAMPLE PURPOSES ONLY AND IS NOT TO BE CONSIDERED THE FINAL INFORMATION TO BE SHOWN ON THE SIGNS.

6.ALL FINAL SIGNS/ARTWORK SHALL BE BY SIGNAGE MANUFACTURER, SUBJECT TO APPROVAL BY THE CONTRACTING OFFICER, BASE DIRECTORATE OF PUBLIC WORKS (WHERE APPLICABLE), AND USING AGENCY.

EXTERIOR SIGNAGE SCHEDULE

ROOM NO.	DOOR NO.	TEXT	SIGN TYPE	LOCATION	QTY.
106	106	VEHICLE CLASSROOM	BB3	A	1
106A	106A	VEHICLE CLASSROOM	BB3	A	1
107	107	VEHICLE PROCESSING	BB3	A	1
107A	107A	VEHICLE PROCESSING	BB3	A	1
107	OH-1	1	B4	C	1
107	OH-2	2	B4	C	1
107	OH-3	3	B4	C	1
107	OH-4	4	B4	C	1
106	OH-5	5	B4	C	1
107	OH-6	6	B4	C	1
107	OH-7	7	B4	C	1
107	OH-8	8	B4	C	1
107	OH-9	9	B4	C	1
106A	OH-10	10	B4	C	1
114		ELECTRICAL ROOM	BB3	A	1
115		MECHANICAL ROOM	BB3	A	1
117	117	WAREHOUSE	BB3	A	1
117	117A	WAREHOUSE	BB3	A	1
117	OH-11	11	B4	C	1
117	OH-12	12	B4	C	1
117	OH-13	13	B4	C	1
117	OH-14	14	B4	C	1
BLDG.	NUMBER	1575	2	B	2

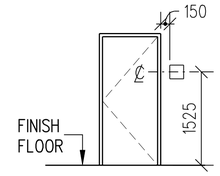

LOCATION A
SCALE 1:50

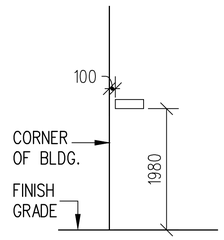

LOCATION B
SCALE 1:50

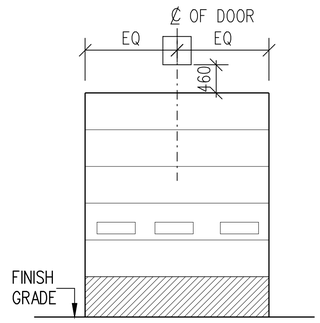

LOCATION C
SCALE 1:50

US Army Corps of Engineers
New York District

U.S. ARMY ENGINEER DISTRICT
CORPS OF ENGINEERS
NEW YORK, NEW YORK

Designed by: Date: Job no.:
Dwn by: Ckd by: Solicitation no.:
Reviewed by: Contract no.:
Submitted by: Plot date: 09-AUG-2005 12:17 Plot by: e3endnsh Scale: 1:0000/1:0000
File name: S:\Barnum\Military\Fort Drum\FortDrum\Architectural\Forms\A-801xxx.dgn

FORCE MODERNIZATION EDUCATION /TRANSITIONAL FACILITY
FORT DRUM, NEW YORK

INTERIOR & EXTERIOR SIGNAGE SCHEDULE

Sheet reference number:
A-801

Submitted by: e3endnsh
S:\filer00\military\Fort Drum\ForceMOD\Architectural\ForceMOD57708_A-801xxx.dgn
Plot Date: 09-AUG-2005 12:17

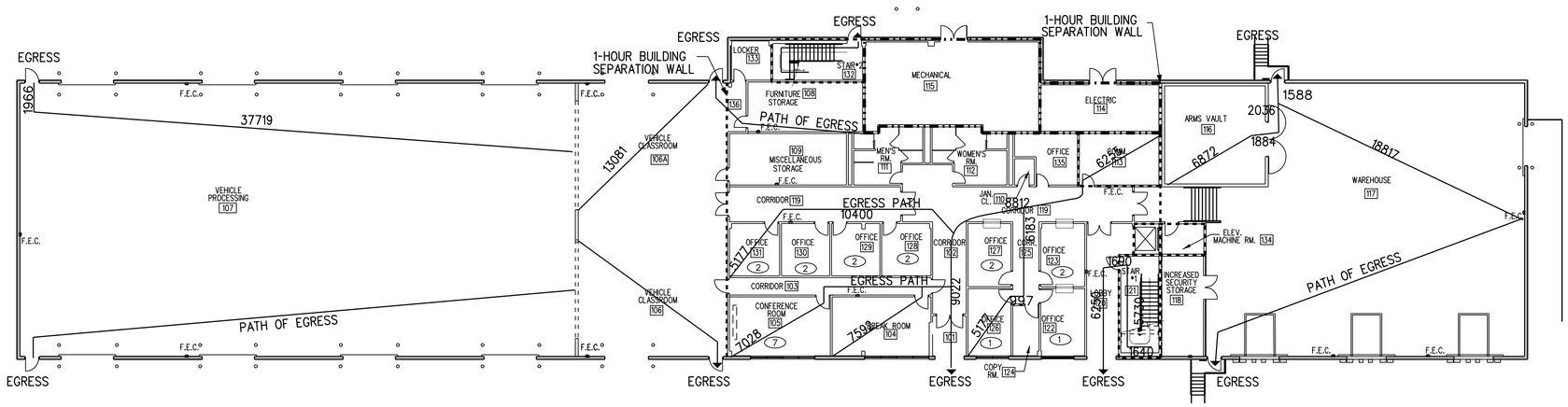

A A900 FIRST FLOOR PLAN– EMERGENCY EGRESS TRAVEL PATH

SCALE 1:200

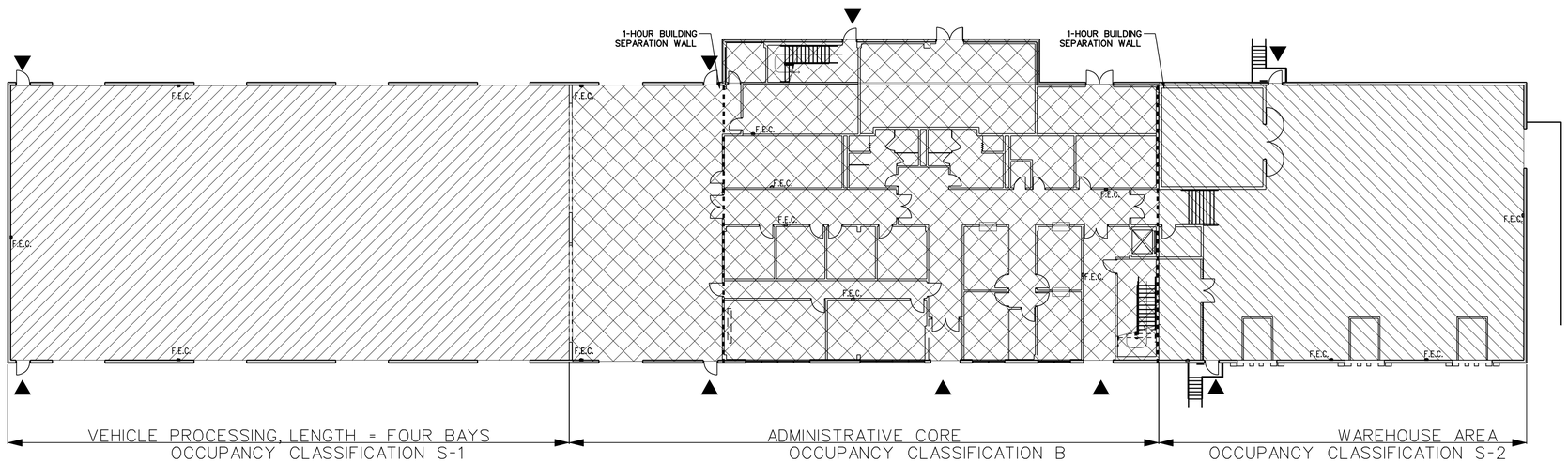

B A900 LIFE SAFETY PLAN – FIRST FLOOR

SCALE 1:200

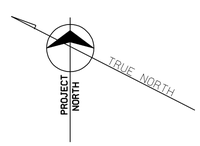

SCALE: 1:100

LIFE SAFETY NOTES

GENERAL EGRESS REQUIREMENTS (LOCATION AND TRAVEL DISTANCE) ARE PROVIDED THE FOLLOWING NOTES:

1. PROVIDE ALL THE AREAS WITH AUTOMATIC SPRINKLER SYSTEM
2. PROVIDE 1800mm OPEN SPACE AROUND PERIMETER OF BUILDING FOR FIRE VEHICLE ACCESS, SEE SITE PLAN.
3. STAIR ENCLOSURES, ELECTRICAL ROOM & MECHANICAL ROOM WALLS, FLOORS & CEILINGS SHALL HAVE 1 HR. FIRE-RATED CONSTRUCTION
4. DISTANCE TO EXITS: 76200 MM MAX W/ FULLY AUTOMATIC SPRINKLERS.
5. ALL OPENINGS OR PENETRATIONS THROUGH FIRE WALLS SHALL BE PROTECTED ACCORDINGLY
6. CORE AREA CORRIDORS DISTANCE SHALL NOT EXCEED CODE REQUIREMENT FOR DEAD-END CORRIDORS (15240 MM W/SPRINKLERS).

LEGEND

- 1 HR FIRE RATED WALL W/1 HR FIRE RATED DOOR
- 2 HR FIRE RATED WALL W/1 1/2 HR FIRE RATED DOOR
- FIRE EXTINGUISHER CABINET-SEMIRECESSED (FEC)
- (24) OCCUPANCY LOAD, NUMBER OF PERS.
- DIRECTION OF TRAVEL
- 201 ROOM NUMBER

OCCUPANCY CALCULATION
AS PER NFPA 101

OFFICE AREA= 100 S.F./ PERSON
CONFERENCE ROOM= 15 S.F./ PERSON
TOTAL OCCUPANCY LOAD=1500 PEOPLE

GENERAL NOTES

IBC 2003 : TYPE II B
STORIES: TWO MAXIMUM
ADA: APPLICABLE

BUILDING FOOTPRINT: 2128.7 SQ. METERS

VEHICLE TRAINING: 202.07 M^2
VEHICLE PROCESSING AREA: 766.2 M^2
CORE AREA: 659 M^2
WAREHOUSE: 502 M^2

ALL DIMENSIONS ARE IN MILLIMETERS

US Army Corps of Engineers
New York District

Mark	Description	Date	Appr.

U.S. ARMY ENGINEER DISTRICT
CORPS OF ENGINEERS
NEW YORK, NEW YORK

Designed by: | Date: | Date Plot Date: 09-AUG-2005 12:17
Dwn by: | Ckd by: | Solicitation no.:
Reviewed by: | Contract no.:
Submitted by: | File size: 36x48 | Plot scale: 1:1 | Plot by: e3endnsh | Date: 1/2/2001 | Time: 1:00:00 AM
File name: S:\Mission Military Fort Drum\FDX\Architectural\Force\D0577\B_A-900xxx.dgn

PN 57708
FORCE MODERNIZATION EDUCATION / TRANSITIONAL FACILITY
FORT DRUM, NEW YORK

Life Safety Plan
First Floor Plan

Sheet reference number:
A–900

Submitted by: e3endnsh
S:\fileroom\military\Fort Drum\ForceMOD\Architectural\ForceMOD577708_A-900xxx.dgn

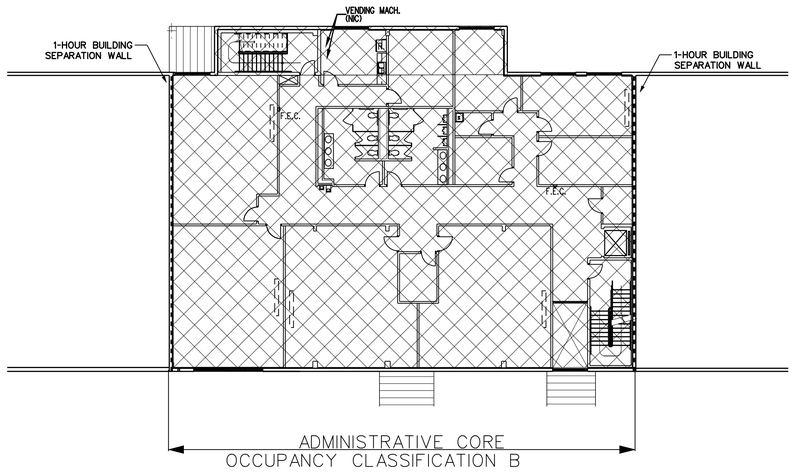

A / A901 UPPER FLOOR ADMINISTRATIVE CORE LIFE SAFETY PLAN

SCALE 1:200

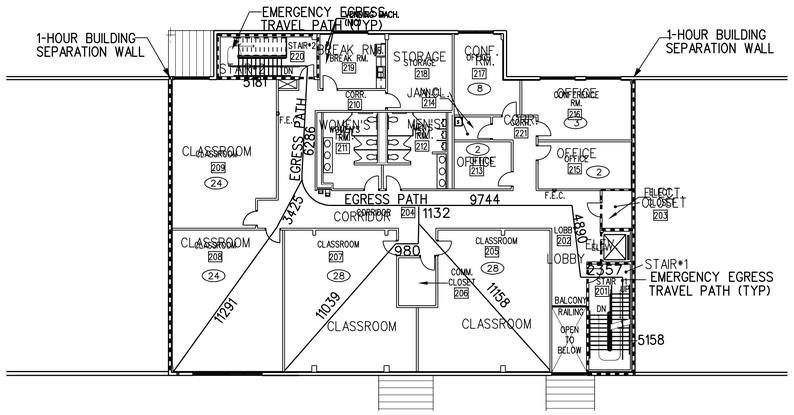

B / A901 UPPER FLOOR ADMINISTRATIVE CORE EMERGENCY EGRESS TRAVEL PATH

SCALE 1:200

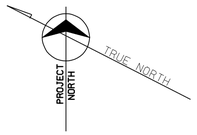

0 2000 4000 10000

SCALE: 1:100

LIFE SAFETY NOTES	LEGEND	GENERAL NOTES
GENERAL EGRESS REQUIREMENTS (LOCATION AND TRAVEL DISTANCE) ARE PROVIDED THE FOLLOWING NOTES: 1. PROVIDE ALL THE AREAS WITH AUTOMATIC SPRINKLER SYSTEM 2. PROVIDE 1800mm OPEN SPACE AROUND PERIMETER OF BUILDING FOR FIRE VEHICLE ACCESS, SEE SITE PLAN. 3. STAIR ENCLOSURES, ELECTRICAL ROOM & MECHANICAL ROOM WALLS, FLOORS & CEILINGS SHALL HAVE 1 HR. FIRE-RATED CONSTRUCTION 4. DISTANCE TO EXITS: 76200 MM MAX W/ FULLY AUTOMATIC SPRINKLERS. 5. ALL OPENINGS OR PENETRATIONS THROUGH FIRE WALLS SHALL BE PROTECTED ACCORDINGLY 6. CORE AREA CORRIDORS DISTANCE SHALL NOT EXCEED CODE REQUIREMENT FOR DEAD-END CORRIDORS (15240 MM W/SPRINKLERS)	- - - - 1 HR FIRE RATED WALL W/1 HR FIRE RATED DOOR - · - · 2 HR FIRE RATED WALL W/1 1/2 HR FIRE RATED DOOR FIRE EXTINGUISHER CABINET-SEMIRECESSED (FEC) (24) OCCUPANCY LOAD, NUMBER OF PERS. —— DIRECTION OF TRAVEL ROOM NUMBER OCCUPANCY CALCULATION AS PER NFPA 101 OFFICE AREA= 100 S.F./ PERSON CONFERENCE ROOM= 15 S.F./ PERSON TOTAL OCCUPANCY LOAD=1500 PEOPLE	IBC 2003 : TYPE IIB STORIES: TWO MAXIMUM ADA: APPLICABLE BUILDING FOOTPRINT: 2128.7 SQ. METERS VEHICLE TRAINING: 202.07 M^2 VEHICLE PROCESSING AREA: 766.2 M^2 CORE AREA: 659 M^2 WAREHOUSE: 502 M^2 ALL DIMENSIONS ARE IN MILLIMETERS

US Army Corps of Engineers
New York District

Mark	Date	Description	Appr.

U.S. ARMY ENGINEER DISTRICT
CORPS OF ENGINEERS
NEW YORK, NEW YORK

Designed by: | Date: | Job no.:
Dwn by: | Ckd by: | Solicitation no.:
Reviewed by: | Contract no.:
Submitted by: | Plot date: 09-AUG-2005 12:17 | Plot by: e3endnsh | Scale: 1:200000/1:50000
File name: S:\filerroom\military\Fort Drum\ForceMOD\Architectural\ForceMOD\Fmt_A-901xxx.dgn

FORCE MODERNIZATION EDUCATION /TRANSITIONAL FACILITY
FORT DRUM, NEW YORK

Life Safety Plan
Second Floor Plan

Sheet reference number:
A–901

Submitted by: e3endnsh
S:\filerroom\military\Fort Drum\ForceMOD\Architectural\ForceMOD\57708_A-901xxx.dgn
Plot Date: 09-AUG-2005 12:17

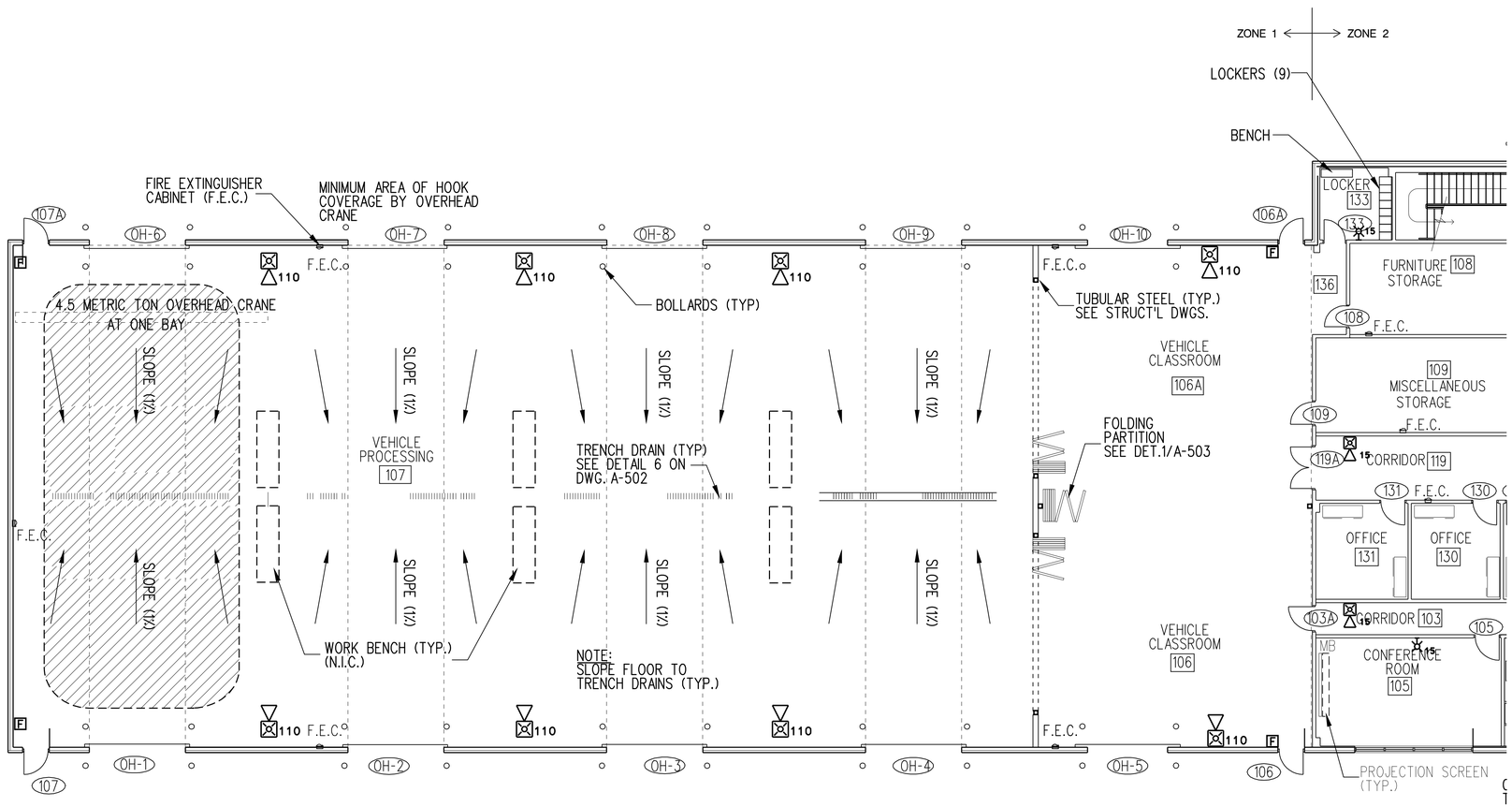

FIRST FLOOR PLAN

SCALE 1:100

FIRE ALARM SYMBOLS

FACP	FIRE ALARM CONTROL PANEL W/VOICE COMMAND CONSOLE
F	FIRE ALARM PULL STATION
FS	MONITOR MODULE FOR SPRINKLER FLOW SWITCH
TS	MONITOR MODULE FOR TAMPER SWTICH
S	SMOKE DETECTOR
DD	DUCT SMOKE DETECTOR
MM	MONITOR MODULE
xx	FIRE ALARM SPEAKER/STROBE INDICATES CANDELA RATING
xx	FIRE ALARM STROBE INDICATES CANDELA RATING
CR	ADDRESSABLE CONTROL RELAY
PAM	PAM RELAY (TO MONITORSHUNT TRIP POWER)
RAMP	REMOTE ANNUNCIATOR AND MICROPHONE PANEL

0 2000 4000 10000

SCALE: 1:100

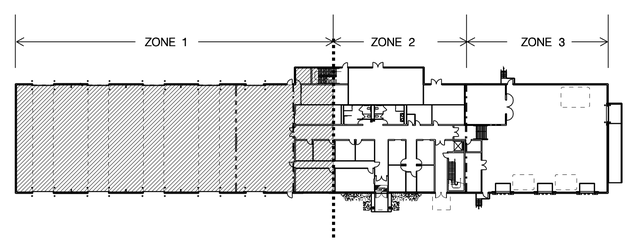

KEY PLAN

SCALE 1:500

US Army Corps of Engineers
New York District

U.S. ARMY ENGINEER DISTRICT
NEW YORK, NEW YORK

Designed by:
Drawn by:
Checked by:
Reviewed by:
Submitted by:
Date:
Solicitation no.:
Contract no.:
Size: 24 x 36
Scale: 1:100
File name: S:\Secure\Files\Civil Drawings\Fort Drum\FORCE MOD\FIRE PROTECTION\SHEET FILES\FORCEMOD57708_FA100XXX.dgn

FORCE MODERNIZATION FIRE PROTECTION
FORT DRUM, NEW YORK
FIN 57708
BLDG 57708 TRANSITIONAL FACILITY

FIRST FLOOR WEST FIRE ALARM PLAN

Sheet reference number:
FA-100

SUBMITTED BY: E3ENDFWB
S:\FILEROOM\MILITARY\FORT DRUM\FORCEMOD\FIRE PROTECTION\SHEET FILES\FORCEMOD57708_FA100XXX.DGN
PLOT DATE: 04-AUG-2005 15:25

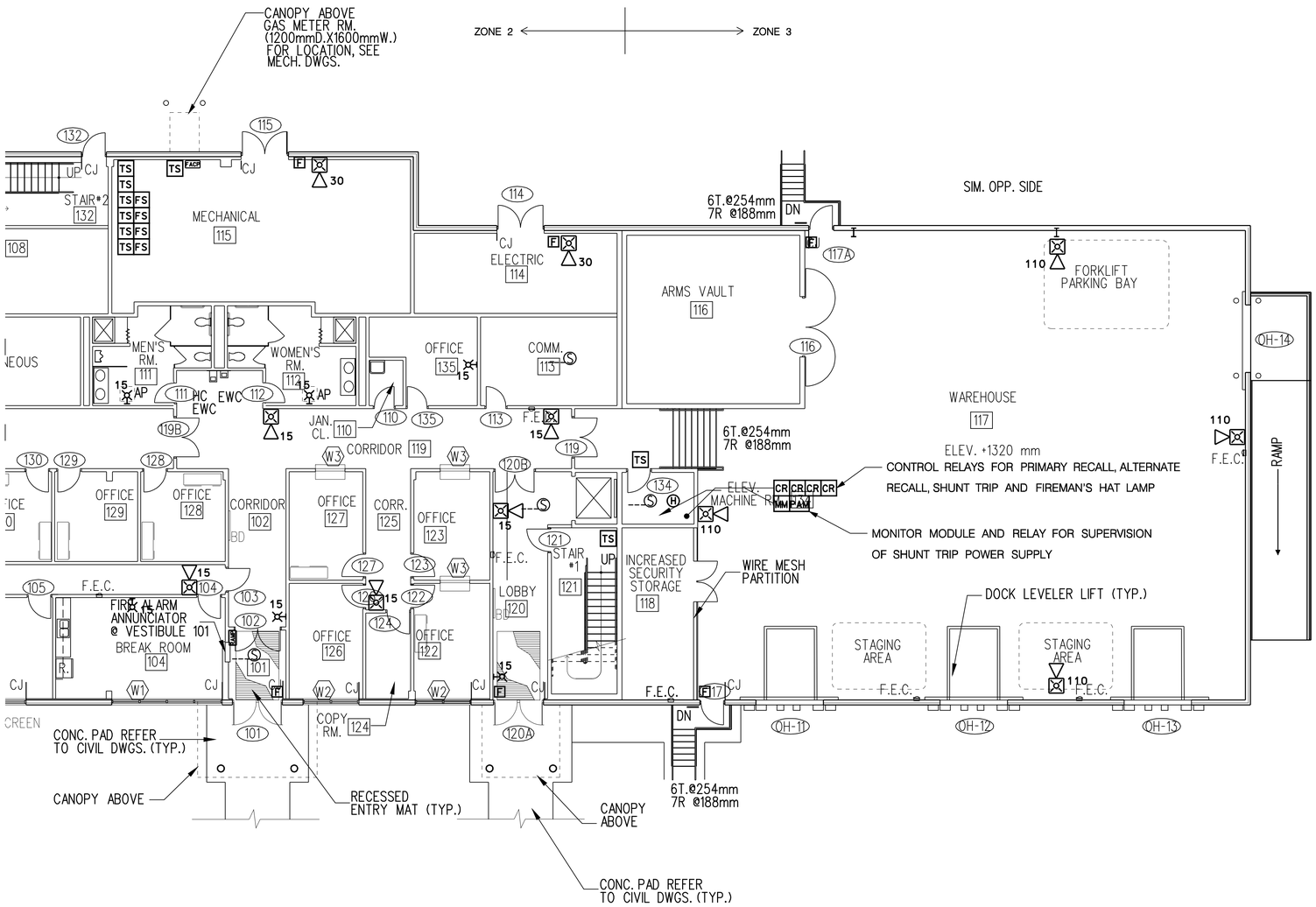

FIRST FLOOR PLAN
SCALE 1:100

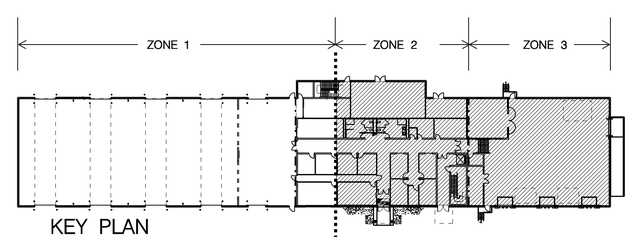

KEY PLAN
SCALE 1:500

US Army Corps of Engineers
New York District

U.S. ARMY ENGINEER DISTRICT
CORPS OF ENGINEERS
NEW YORK, NEW YORK

PN 57708
FORCE MODERNIZATION EDUCATION /TRANSITIONAL FACILITY
FORT DRUM, NEW YORK

FIRST FLOOR-EAST
FIRE ALARM PLAN

Sheet reference number:
FA-101

SUBMITTED BY: E3ENDFWB PLOT DATE: 04-AUG-2005 15:25
S:\FILEROOM\MILITARY\FORT DRUM\FORCEMOD\FIRE PROTECTION\SHEET FILES\FORCEMOD57708_FA101XXX.DGN

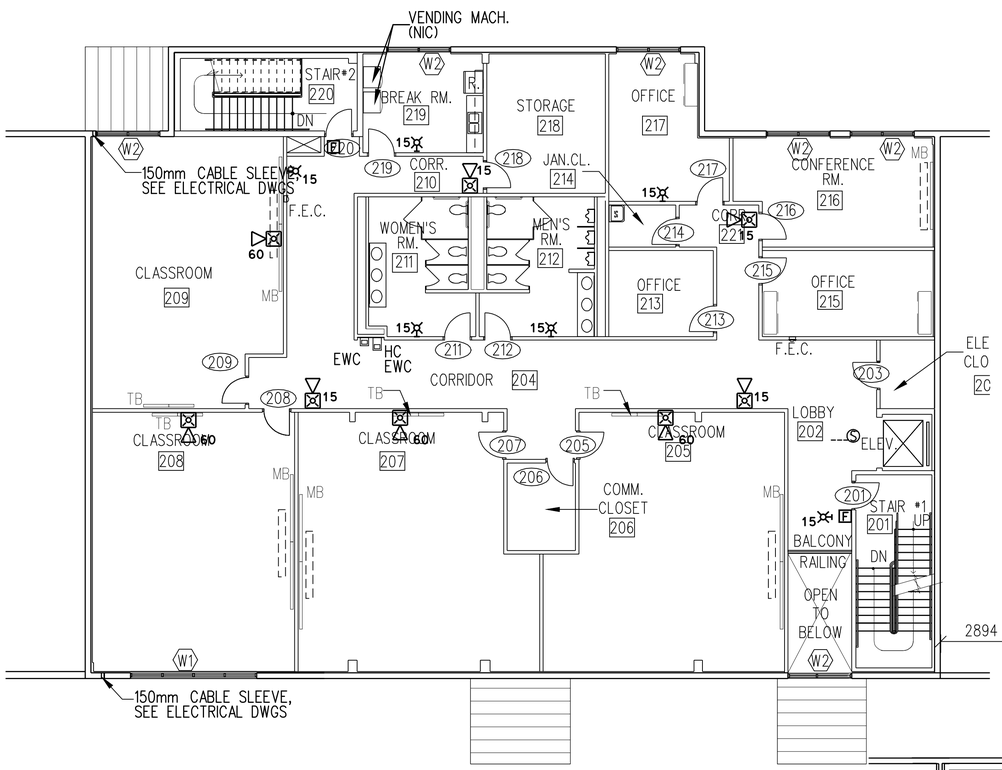

SECOND FLOOR PLAN

SCALE 1:100

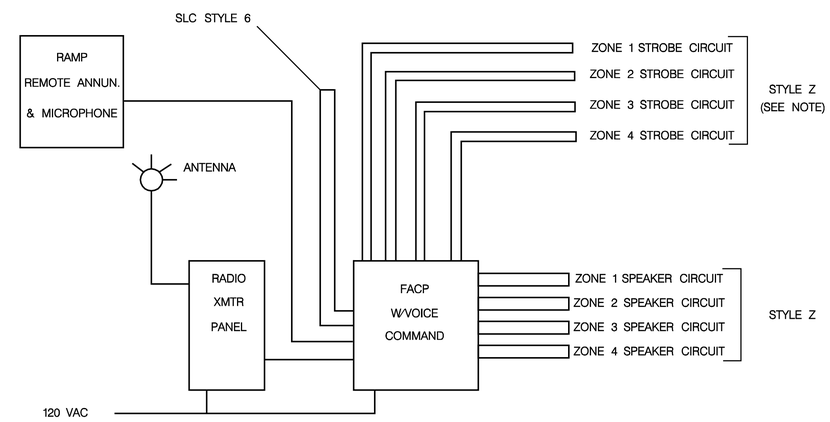

NOTE:

PROVIDE REMOTE POWER SUPPLY PANEL (S) IF NECESSARY TO MEET STROBE POWER SUPPLY DEMAND.

FIRE ALARM SYMBOLS

NOT TO SCALE

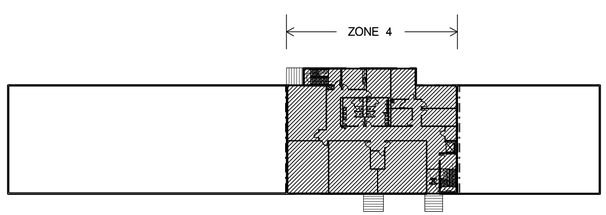

KEY PLAN

SCALE 1:500

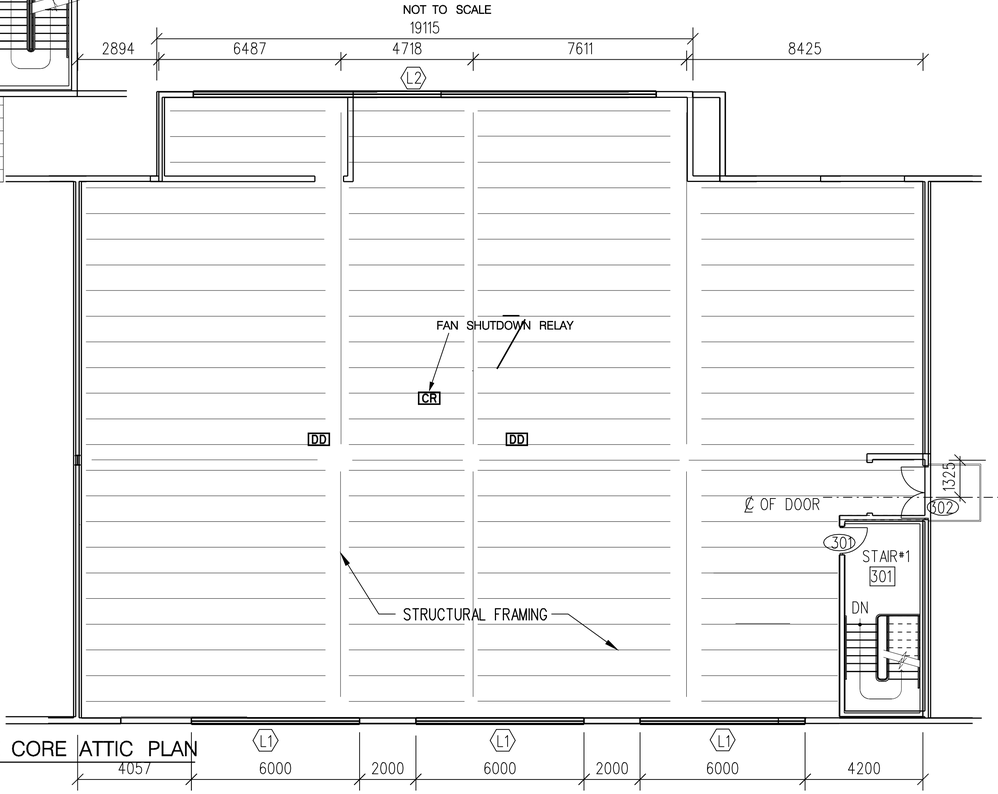

ADMINISTRATIVE CORE ATTIC PLAN

SCALE 1:100

US Army Corps of Engineers New York District

U.S. ARMY ENGINEER DISTRICT 26 FEDERAL PLAZA NEW YORK, NEW YORK

Designed by: Dwn by: Chk by: Reviewed by: Submitted by: Date: Solicitation no.: Contract no.: File name: A-ALL-DWG 1.DGN Plot by: dwardle Plot date: 2/23/2005 12:00:00

FN. 57708
FORCE MODERNIZATION (TRANSITIONAL FACILITY) DIVISION OF ENGINEERING FORT DRUM, NEW YORK

SECOND FLOOR FIRE ALARM PLAN

Sheet reference number: FA–102

SUBMITTED BY: E3ENDFWB
S:\FILEROOM\MILITARY\FORT DRUM\FORCEMOD\FIRE PROTECTION\SHEET FILES\FORCEMOD57708_FA102XXX.DGN
PLOT DATE: 04-AUG-2005 15:25

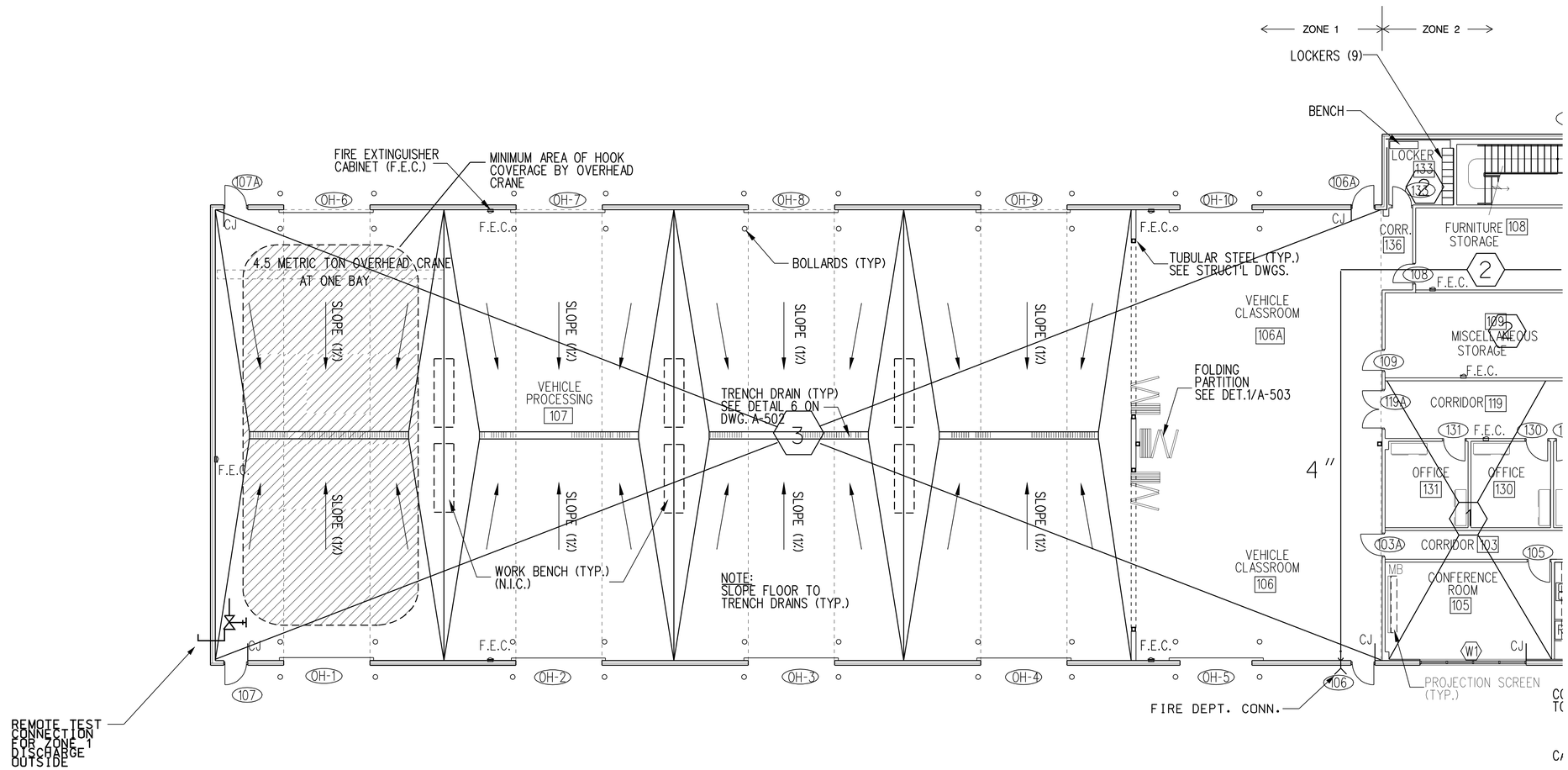

FIRST FLOOR PLAN

SCALE 1:100

KEY NOTES

1. LIGHT HAZARD OCCUPANCE 0.10 GPM/SF OVER 3000 SF
2. ORDINARY HAZARD, GROUP 1 0.15 GPM/SF OVER 3000 SF
3. ORDINARY HAZARD, GROUP 2 0.20 GPM/SF OVER 3000 SF

LEGEND

- O.S.Y VALVE W/TAMPER
- BACKFLOW PREVENTER
- CHECK VALVE
- FLOW SWITCH
- BALL OR GATE VALVE (NO TAMPER)
- FIRE DEPT. CONNECTION (5-IN STORZ)

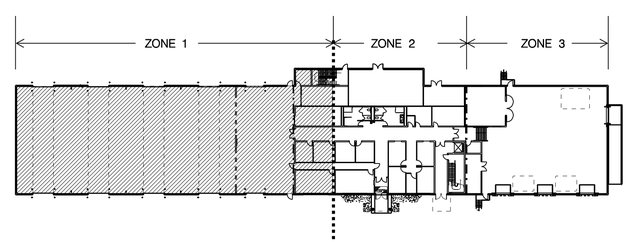

KEY PLAN

SCALE 1:500

US Army Corps of Engineers
New York District

U.S. ARMY ENGINEER DISTRICT
CORPS OF ENGINEERS
NEW YORK, NEW YORK

Designed by:
Dwn by:
Ckd by:
Reviewed by:
Submitted by:
Date:
Solicitation no.:
Contract no.:
File name: A-AUG-2005 15:25
File No.: FS-100
Size: 22"x34"(Landscape)

FORCE MODERNIZATION PH 5708
FORT DRUM, NEW YORK
TO STORAGE / TRANSITIONAL FACILITY

FIRST FLOOR–WEST FIRE SPRINKLER PLAN

Sheet reference number:
FS–100

SUBMITTED BY: E3ENDFWB PLOT DATE: 04-AUG-2005 15:25
S:\FILEROOM\MILITARY\FORT DRUM\FORCEMOD\FIRE PROTECTION\SHEET FILES\FORCEMOD57708_FS100XXX.DGN

CANOPY ABOVE
GAS METER RM.
(INCLUDING WALL)
FOR LOCATIONS
MECH. DWGS.

SEE CIVIL DWGS

ZONE 2 — ZONE 3

4" UP/DN

UP CJ

STAIR #2

MECHANICAL 115

ZONE 1
ZONE 2
ZONE 3

TO FDC

MEN'S RM. 111

WOMEN'S RM. 112

AP

HC EWC

JAN. CL. 110

OFFICE 135

COMM. 113

ELECTRIC 114

CJ

6T.@254mm
7R @188mm

DN

ARMS VAULT 116

DOWN TO SPRINKLER IN THE PIT

SIM. OPP. SIDE

FORKLIFT PARKING BAY

WAREHOUSE 117

ELEV. +1320 mm

F.E.C.

RAMP

OH-14

FROM ZONE 2

FROM ZONE 3

6T.@254mm FROM MAIN
7R @188mm

OS & Y WITH TAMPER

ELEV. MACHINE RM. 134

FLOW SWITCH (PROVIDE TEST CONN. DISCHARGING OUTSIDE)

SPRINKLER IN EMR WIRE MESH PARTITION

1" UP INCREASED SECURITY STORAGE 118

STAIR #1

LOBBY 120

CORRIDOR 119

OFFICE 129

OFFICE 128

CORRIDOR 102

OFFICE 127

CORR. 125

OFFICE 123

OFFICE 126

OFFICE 122

COPY RM. 124

BREAK ROOM 104

FIRE ALARM ANNUNCIATOR @ VESTIBULE 101

DOCK LEVELER LIFT (TYP.)

STAGING AREA

REMOTE TEST CONNECTION FOR ZONE 3. DISCHARGE OUTSIDE

CONC. PAD REFER TO CIVIL DWGS. (TYP.)

CANOPY ABOVE

RECESSED ENTRY MAT (TYP.)

REMOTE TEST CONNECTION FOR ZONE 2. DISCHARGE OUTSIDE ABOVE

6T.@254mm
7R @188mm

DISCHARGE FROM ZONE 4 TEST CONNECTION

CONC. PAD REFER TO CIVIL DWGS. (TYP.)

FIRST FLOOR PLAN

SCALE 1:100

KEY NOTES

1. LIGHT HAZARD OCCUPANCE 0.10 GPM/SF OVER 3000 SF
2. ORDINARY HAZARD, GROUP 1 0.15 GPM/SF OVER 3000 SF
3. ORDINARY HAZARD, GROUP 2 0.20 GPM/SF OVER 3000 SF

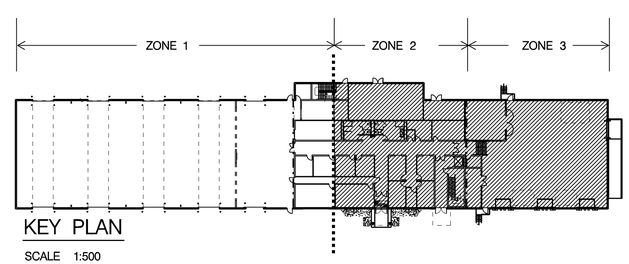

KEY PLAN

SCALE 1:500

US Army Corps of Engineers
New York District

U.S. ARMY ENGINEER DISTRICT
CORPS OF ENGINEERS
NEW YORK, NEW YORK

Designed by: | Date: | Date: A2
Dwn by: | Ckd by: | Solicitation no.:
Reviewed by: | Submitted by: | Contract no.:
Plot date: 04-AUG-2005 15:25
Plot file: sheetfs
Plot by: e3endfwb
Scale: 1:100000/1000000

FORCE MODERNIZATION PN 57708
FIELD STATION / TRANSITIONAL FACILITY
FORT DRUM, NEW YORK

FIRST FLOOR-EAST FIRE SPRINKLER PLAN

Sheet reference number:
FS-101

SUBMITTED BY: E3ENDFWB
S:\FILEROOM\MILITARY\FORT DRUM\FORCEMOD\FIRE PROTECTION\SHEET FILES\FORCEMOD57708_FS101XXX.DGN
PLOT DATE: 04-AUG-2005 15:25

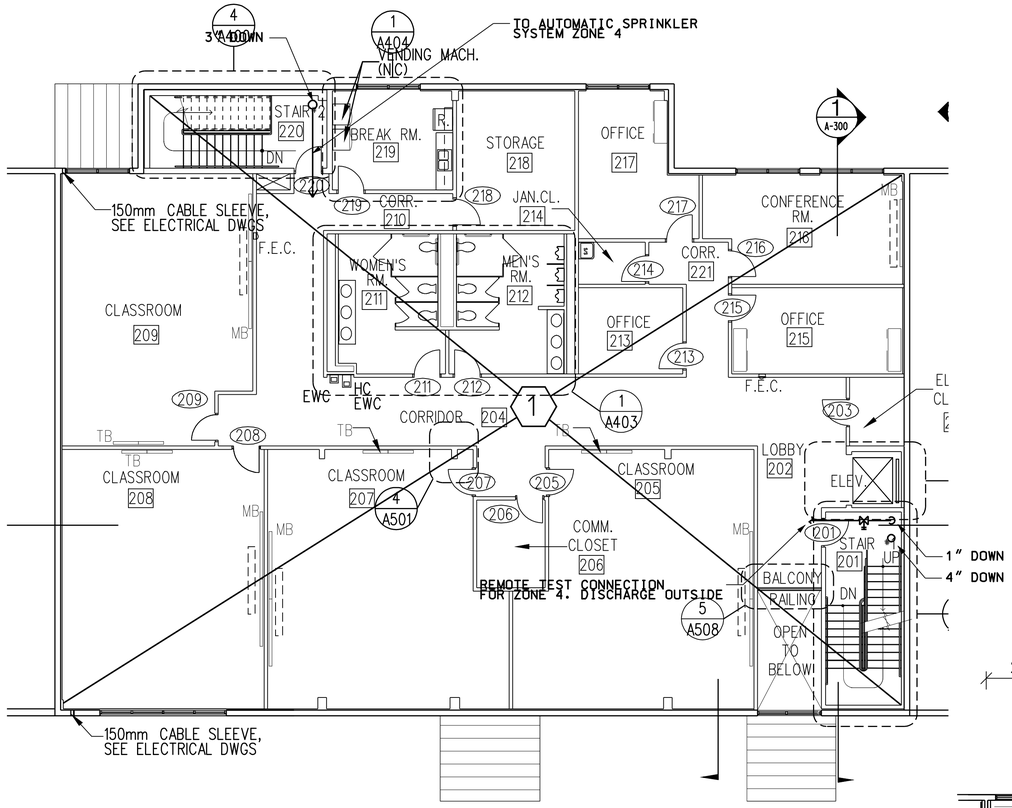

SECOND FLOOR PLAN

SCALE 1:100

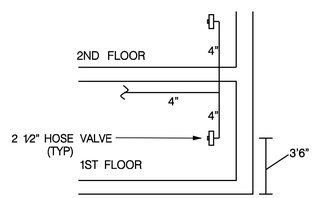

STANDPIPE DETAIL

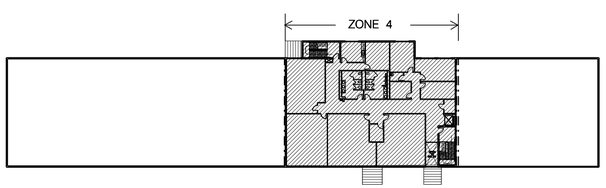

KEY PLAN

SCALE 1:500

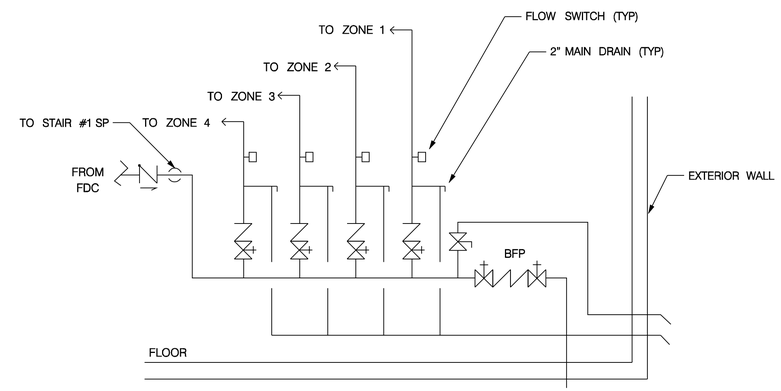

FIRE SPRINKLER DIAGRAM

NOT TO SCALE

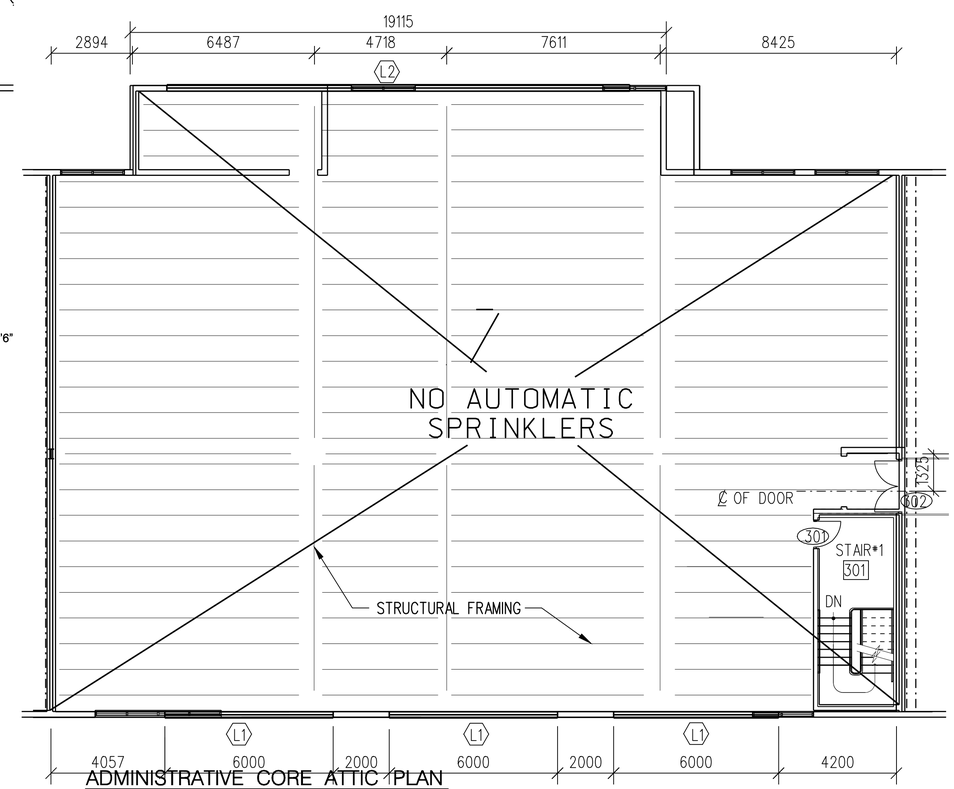

ADMINISTRATIVE CORE ATTIC PLAN

SCALE 1:100

US Army Corps of Engineers
New York District

Mark	Description	Date	Appr.

Designed by:
Dwn by:
Ckd by:
Reviewed by:
Submitted by:
Date:
Solicitation no.:
Contract no.:
File name: A-AUG-2005 15:25
Plot date: 04-AUG-2005
Plot scale: 1:100000000000

U.S. ARMY ENGINEER DISTRICT
CORPS OF ENGINEERS
NEW YORK, NEW YORK

FORCE MODERNIZATION PN 57708
TO CATEGORY B FACILITY /TRANSITIONAL FACILITY
FORT DRUM, NEW YORK

SECOND FLOOR FIRE SPRINKLER PLAN

Sheet reference number:
FS–102

SUBMITTED BY: E3ENDFWB
S:\FILEROOM\MILITARY\FORT DRUM\FORCEMOD\FIRE PROTECTION\SHEET FILES\FORCEMOD57708_FS102XXX.DGN
PLOT DATE: 04-AUG-2005 15:25

LEGEND

- SANITARY SEWER OR WASTE PIPE (WP)
- SANITARY VENT PIPE (VP)
- DOMESTIC COLD WATER (DCW)
- DOMESTIC HOT WATER (DHW)
- DOMESTIC HOT WATER RECIRCULATING (DHWR)
- PIPE CAP
- FP — FIRE PROTECTION
- G — GAS PIPING
- ST — STORM LINE
- COND — CONDENSATE LINE
- DIRECTION OF SLOPE DOWN
- DIRECTION OF FLOW
- GATE VALVE (HORIZONTAL & VERTICAL)
- GAS SHUT-OFF COCK
- FLOOR CLEAN OUT WITH DECK PLATE (FCOD)
- CHECK VALVE
- BALANCING VALVE
- BACKFLOW PREVENTER
- TEMPERATURE AND PRESSURE RELIEF VALVE
- UNION
- INTERIOR HOSE BIBB (HB)
- EXTERIOR WALL HYDRANT (WH)
- FLOOR DRAIN (FD)
- WALL CLEANOUT (WCO)
- WATER HAMMER ARRESTER (PDI SIZE FIXTURE UNIT RATING AS INDICATED) SEE WATER HAMMER ARRESTER DETAIL ON THIS SHEET.
- VENT THRU ROOF (VTR)
- IN-LINE PUMP

ABBREVATIONS

AD	ACCESS DOOR
AP	ACCESS PANEL
AFF	ABOVE FINISHED FLOOR
AFG	ABOVE FINISHED GRADE
APPROX	APPROXIMATELY
BFF	BELOW FINISHED FLOOR
BFG	BELOW FINISHED GRADE
BFP	BACKFLOW PREVENTER
BTUH	BRITISH THERMAL UNIT PER HR
°C	DEGREES CELSIUS
CO	CLEAN OUT
COMB.	COMBINATION
DCV	DOUBLE CHECK VALVE BACKFLOW PREVENTER
DCW	DOMESTIC COLD WATER
DEG	DEGREE
DHW	DOMESTIC HOT WATER
DHWH	DOMESTIC HOT WATER HEATER No. 1
DHWCP	DOMESTIC HOT WATER CIRCULATING PUMP
DHWR	HOT WATER RECIRCULATING
DIAG	DIAGRAM
DN	DOWN
DWV	DRAIN, WASTE & VENT
EL	ELBOW
ELEV	ELEVATION
EXH	EXHAUST
EWC	ELECTRIC WATER COOLER
FCOD	FLOOR CLEAN OUT WITH DECK PLATE
FD	FLOOR DRAIN
HB	HOSE BIB
HC	HANDICAP
HOA	HAND-OFF-AUTO
HR	HOUR
INV EL	INVERT ELEVATION
KW	KILOWATT
L	LITERS
L/S	LITERS PER SECOND
LPH	LITERS PER HOUR
MAX	MAXIMUM
MIN	MINIMUM, MINUTE
MM	MILLIMETERS
MTD	MOUNTED
NIC	NOT IN CONTRACT
NOM	NOMINAL
NPT	NATIONAL PIPE THREAD
OD	OUTSIDE DIAMETER
OW	OIL/WATER DRAIN
P-1	PUMP No. 1
PDI	PLUMBING AND DRAINAGE INSTITUTE
PD	PRESSURE DROP
RD	ROOF DRAIN
RPBFP	REDUCED PRESSURE BACKFLOW PREVENTER
RPS	REVOLUTIONS PER SECOND
S	SANITARY SEWER OR WASTE
STD	STANDARD
TYP	TYPICAL
UG	UNDERGROUND
VP	VENT PIPE
VTR	VENT THRU ROOF
W	WATTS
WCO	WALL CLEAN OUT (WCO)
WH	WALL HYDRANT
WHA	WATER HAMMER ARRESTER
WHSE	WAREHOUSE
WPD	WATER PRESSURE DROP

GENERAL NOTES

1. ALL PLUMBING AND PLUMBING MATERIALS SHALL MEET THE REQUIREMENTS OF INTERNATIONAL PLUMBING CODE, LATEST EDITION.
2. SLOPES AND INVERT ELEVATIONS SHALL BE ESTABLISHED BEFORE ANY PIPING IS INSTALLED IN ORDER THAT PROPER SLOPES WILL BE MAINTAINED. ALL PIPING SHALL BE RUN TO AVOID CONFLICTS WITH OTHER TRADES.
3. COORDINATE WITH ARCHITECTURAL DRAWINGS BEFORE ROUGHING IN PLUMBING FIXTURES.
4. COORDINATE THE LOCATION OF ALL PIPING WITH LIGHTING FIXTURES, DUCTS, GRILLES, HEATING PIPING, ETC.
5. ALL PIPING SHALL BE CONCEALED IN WALLS OR ABOVE CEILINGS UNLESS OTHERWISE NOTED.

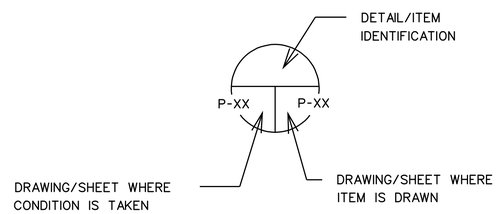

US Army Corps of Engineers
New York District

U.S. ARMY ENGINEER DISTRICT
CORPS OF ENGINEERS
NEW YORK, NEW YORK

Designed by: | Date: | File no.:
Dwn by: | Ckd by: | Solicitation no.:
Reviewed by: | Contract no.:
Submitted by: | Plot date: 04-AUG-2005 12:08 | Plot by: e3endem3 | Scale: 1:0000/1:00000

File name: S:\Mission Military Fort Drum\FDrum\CD\Mechanical\100% Submittal\FDrum\P-001.dgn

FORCE MODERNIZATION EDUCATION /TRANSITIONAL FACILITY
FORT DRUM, NEW YORK

PN 57708

LEGEND,SYMBOLS,NOTES & ABBREVIATIONS

Sheet reference number:
P-001

Submitted by: e3endem3 Plot Date: 04-AUG-2005 12:08
S:\filer oom\military\Fort Drum\ForceMOD\Mechanical\100% Submittal\ForceMOD57708_P-001xxx.dgn

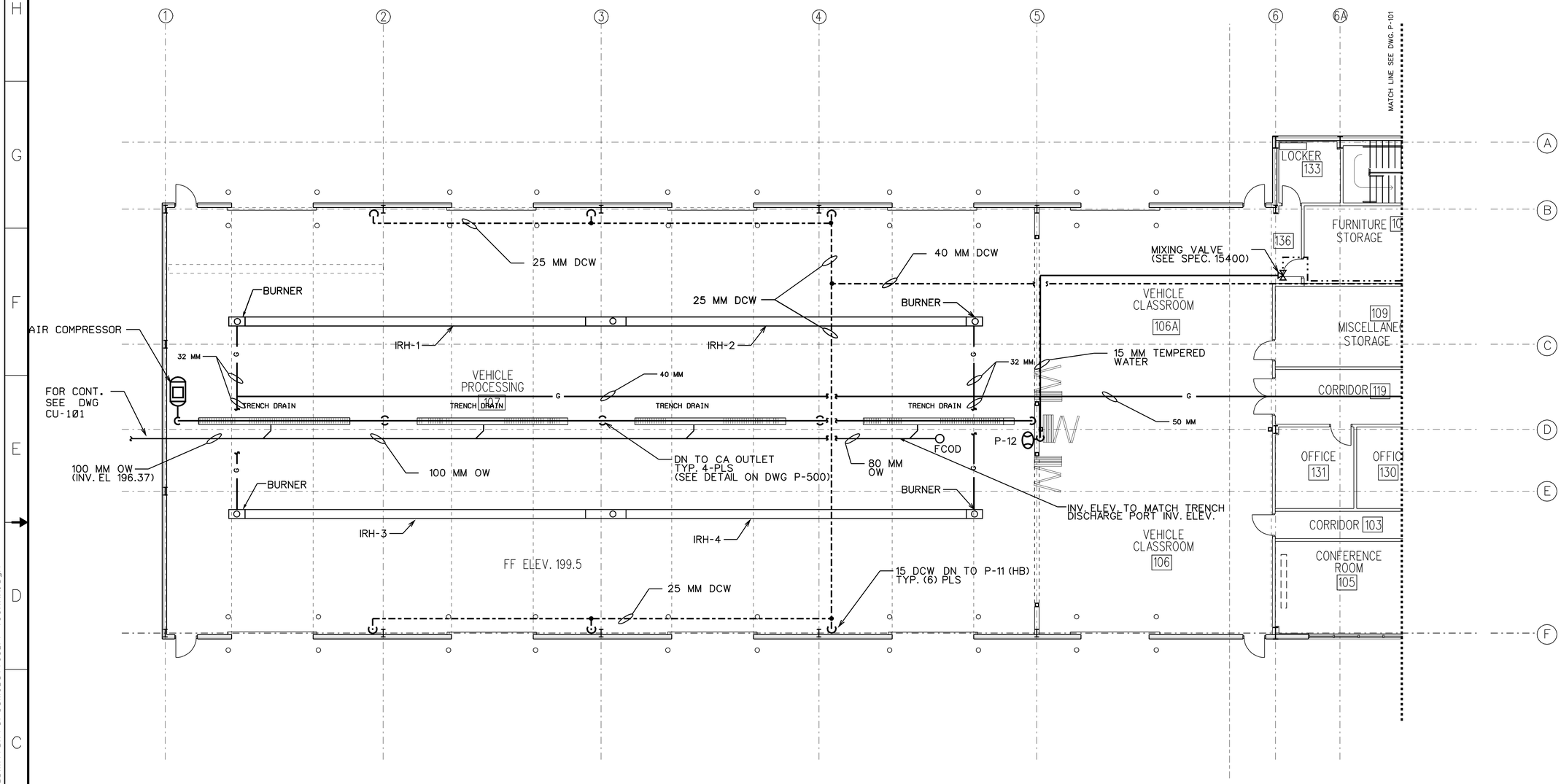

FIRST FLOOR PLAN - PLUMBING

SCALE: 1:100

SCALE: 1:100

0 2000 4000 10000

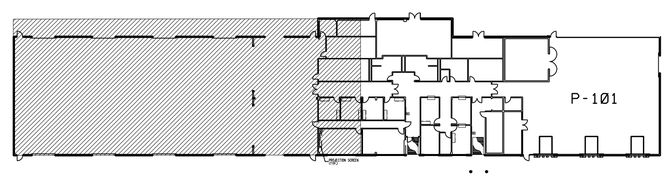

KEY PLAN

ALL DIMENSIONS ARE IN MILLIMETERS EXCEPT AS NOTED

US Army Corps of Engineers
New York District

FORCE MODERNIZATION EDUCATION (TRANSITIONAL FACILITY
PN 57708
FORT DRUM, NEW YORK

1st FLR PLAN–PLUMBING (SHEET 1)

Sheet reference number:
P–100

U.S. ARMY ENGINEER DISTRICT
CORPS OF ENGINEERS
NEW YORK, NEW YORK

Designed by:
Drawn by:
Checked by:
Reviewed by:
Submitted by:
Date:
Solicitation no.:
Contract no.:
Plot date: 09-AUG-2005 11:36
Plot scale: 1:1
Size: 24x36
Scale: 1:100/0.1:100/0.01

Submitted by: e3endem3
S:\fileroom\military\Fort Drum\ForceMOD\Mechanical\100% Submittal\ForceMOD57708_PP-100xxx.dgn
Plot Date: 09-AUG-2005 11:36

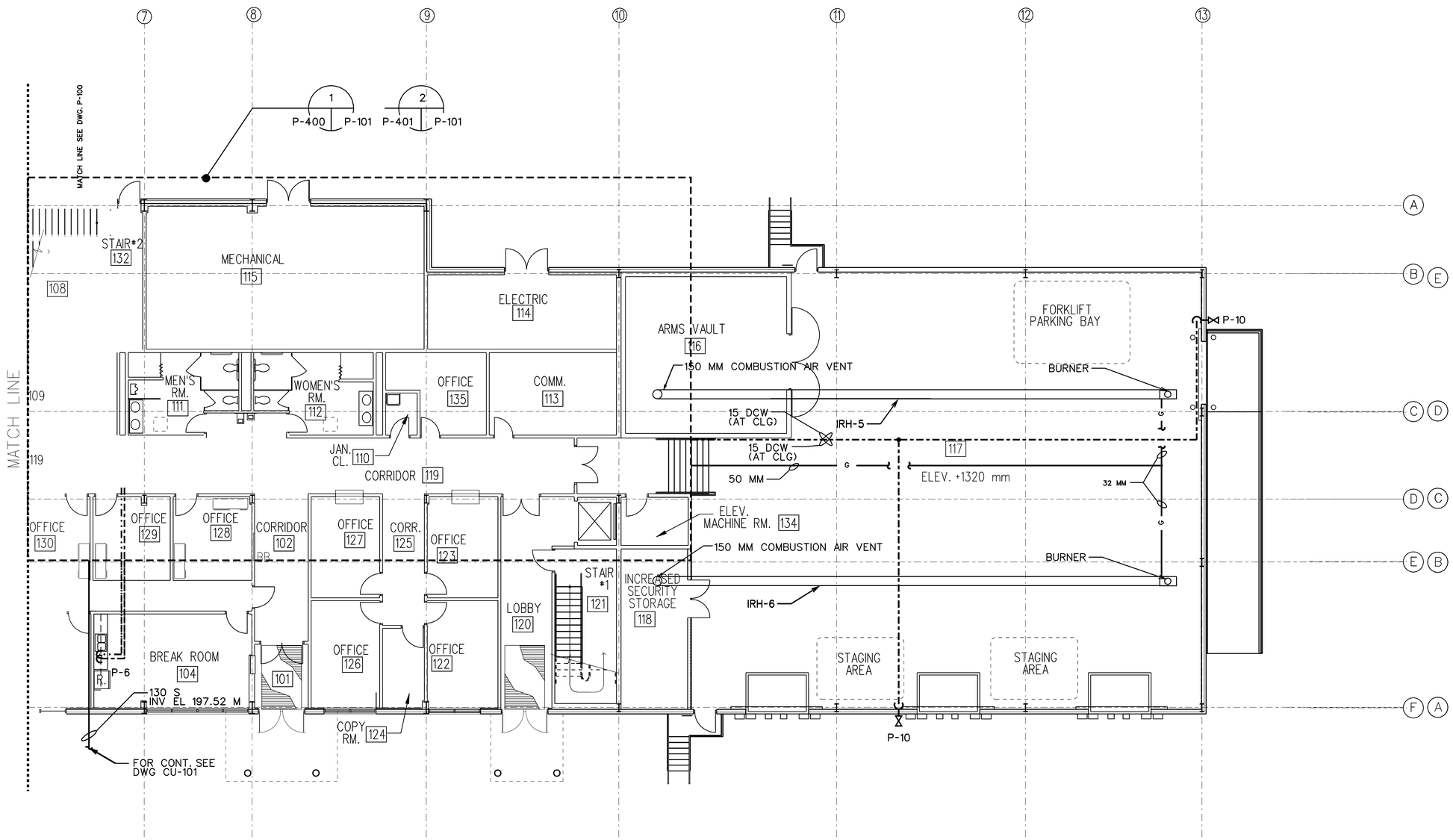

FIRST FLOOR PLAN - PLUMBING

SCALE: 1:100

0 2000 4000 10000

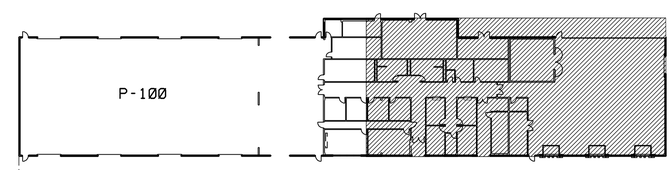

KEY PLAN

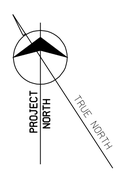

ALL DIMENSIONS ARE IN MILLIMETERS
UNLESS OTHERWISE NOTED

US Army Corps of Engineers
New York District

Mark	Description	Date	Appr.

Designed by: NAME	Date: 08 JUL 2005
Dwn by: NAME	Ckd by: NAME
Reviewed by: NAME	Solicitation no.: DACA51-A-05-0200
Submitted by: NAME	Contract no.: DACA51-C-05-0089
	Project no.: 57708
	Plot date: 09-AUG-2005 11:36
	Plot by: e3endem3
	Scale: 1:100/01:100/00

U.S. ARMY ENGINEER DISTRICT
CORPS OF ENGINEERS
NEW YORK, NEW YORK 10278

File name: E:\Tasks\military\fort drum\model\0\Mechanical\100% Submittal\forceMOD57708_PP-101xxx.dgn

FORCE MODERNIZATION EDUCATION /TRANSITIONAL FACILITY
FORT DRUM, NEW YORK 10278

PN 57708

VEH PROC/ADMIN/CLASSRM
1st FLR PLAN-PLUMBING

Sheet reference number:
P-101

SHEET FILE: G:\CADD_STANDARDS\working files\PORDER_SHEET_2005-03-08\x-A1.dgn

Submitted by: e3endem3
S:\filer\oom\military\fort Drum\ForceMOD\Mechanical\100% Submittal\ForceMOD57708_PP-101xxx.dgn
Plot Date: 09-AUG-2005 11:36

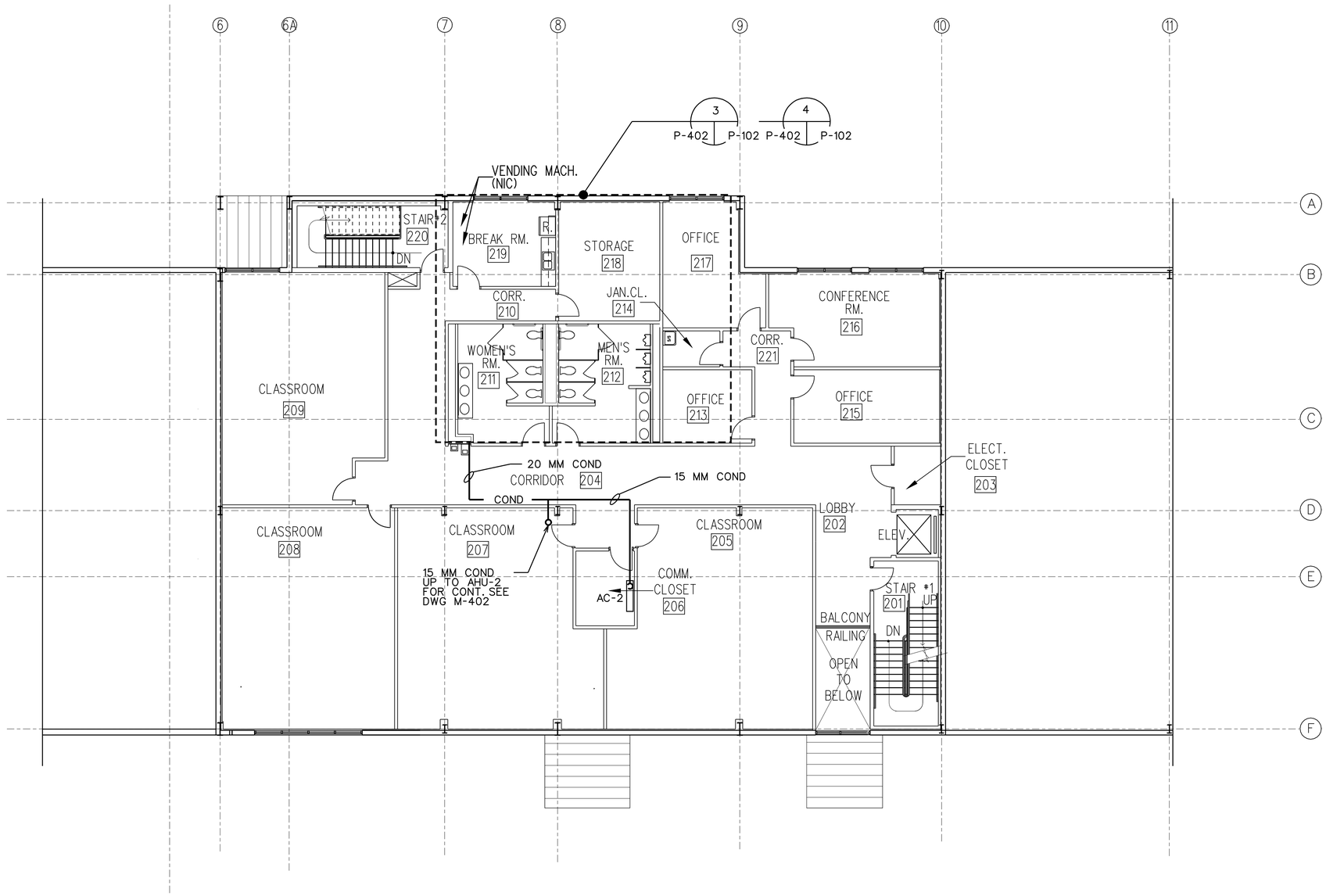

SECOND FLOOR PLAN – PLUMBING

SCALE: 1:100

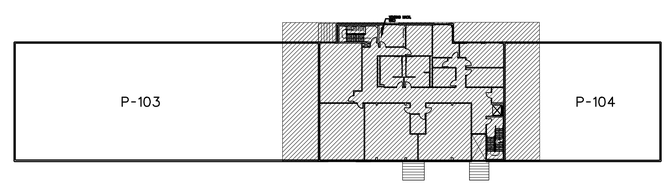

KEY PLAN

ALL DIMENSIONS ARE IN MILLIMETERS EXCEPT AS NOTED

US Army Corps of Engineers
New York District

Mark	Date	Description	Appr.

U.S. ARMY ENGINEER DISTRICT
CORPS OF ENGINEERS
NEW YORK, NEW YORK

Designed by: | Date: | Rev. date:
Dwn by: | Ckd by: | Solicitation no.:
Reviewed by: | Contract no.:
Submitted by: | Plot date: 08-AUG-2005 10:38 | Plot by: SUBMITTAL | Scale: 1:200/0.1:200/0.

File name: S:\Standard military\Fort Drum\Facility\Mechanical\100%_Submittal\mech2100.dgn, #1-100sw.dgn

FORCE MODERNIZATION EDUCATION /TRANSITIONAL FACILITY
FORT DRUM, NEW YORK

PN 57708

VEH PROC/ADMIN CLASSRM 2ND FLR PLAN–PLUMBING

Sheet reference number:

P–102

SUBMITTED BY: E3ENDFWB
S:\FILEROOM\MILITARY\FORT DRUM\FORCEMOD\MECHANICAL\100% SUBMITTAL\FORCEMOD57708_PP-102XXX.DGN
PLOT DATE: 08-AUG-2005 10:38

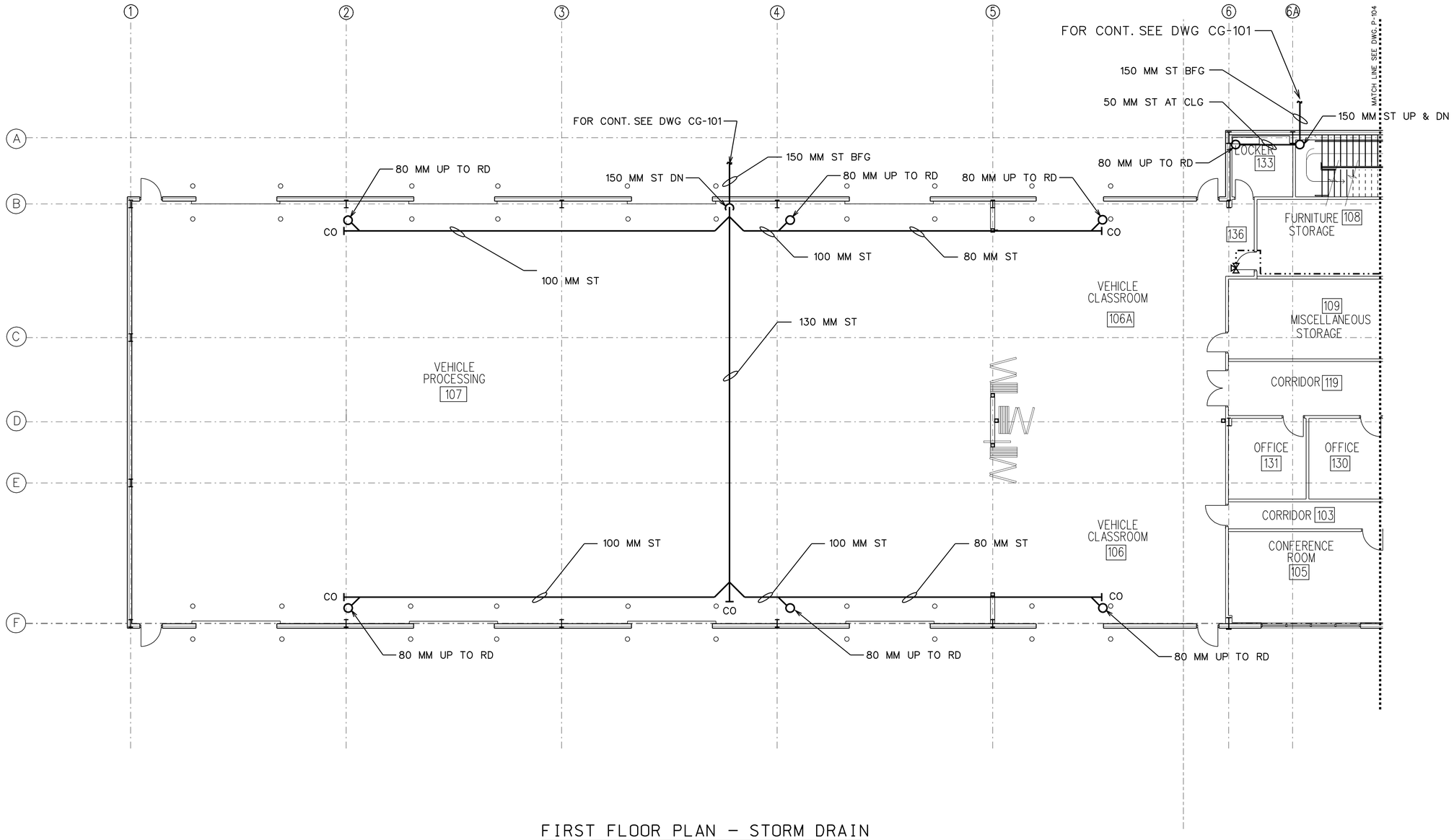

FIRST FLOOR PLAN - STORM DRAIN

SCALE: 1:100

NOTES:

1. STORM DRAINS ARE AT HIGHEST POINT AT CEILING. LOCATION MAYBE MODIFIED TO SUIT FIELD CONDITION. LOCATION SHALL BE COORDINATED WITH BEAMS AND COLUMNS.
2. SIZE OF PIPES WAS BASED ON 2.25 INCHES RAINFALL AND 2% SLOPE. SIZE AND SLOPE MAYBE MODIFIED PER TABLE 1106.2 AND 1106.3 OF INTERNATIONAL PLUMBING CODE (IPC).

SCALE: 1:100

0 2000 4000 10000

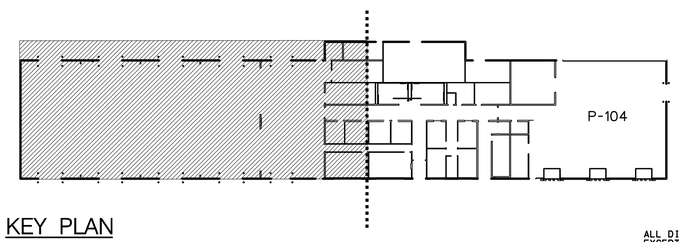

KEY PLAN

ALL DIMENSIONS ARE IN MILLIMETERS EXCEPT AS NOTED

US Army Corps of Engineers New York District

U.S. ARMY ENGINEER DISTRICT CORPS OF ENGINEERS NEW YORK, NEW YORK

Designed by: Date: Job no.:
Dwn by: Ckd by: Solicitation no.:
Reviewed by: Contract no.:
Submitted by: Plot date: 04-AUG-2005 12:08 Plot scale: 1 Scale: 1:200/0:1:100/0:0
File name: S:\Stanford Military Fort Drum\Facilities\Mechanical\100%_Submittal\ForceMOD57708_PP-103xxx.dgn

FORCE MODERNIZATION EDUCATION /TRANSITIONAL FACILITY FOR FEMALE WAC PERSONNEL

1ST FRL PLAN-STORM DRAIN (SHEET 1)

Sheet reference number: P-103

Submitted by: e3endem3
S:\filer-oom\military\Fort Drum\ForceMOD\Mechanical\100% Submittal\ForceMOD57708_PP-103xxx.dgn
Plot Date: 04-AUG-2005 12:08

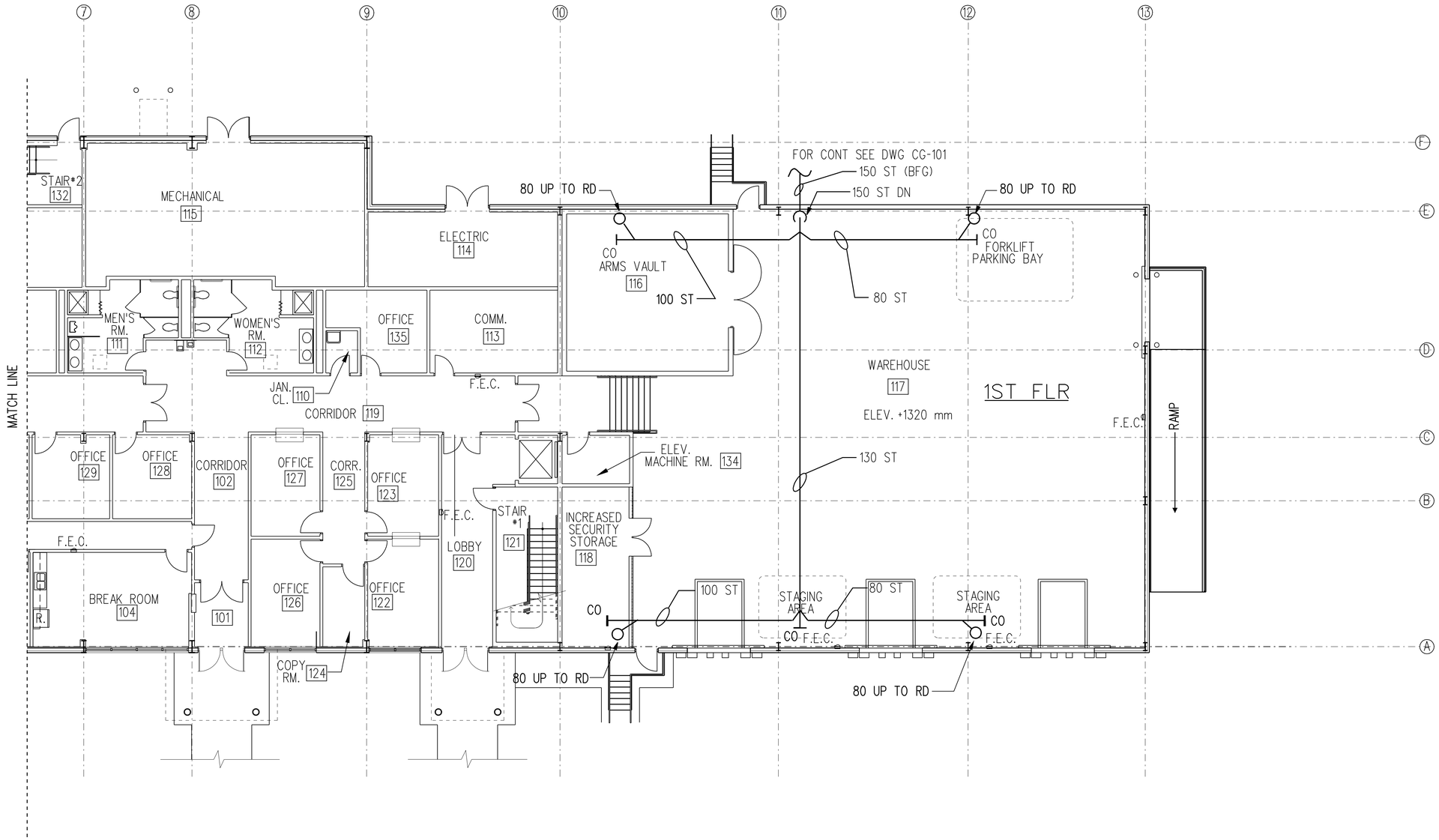

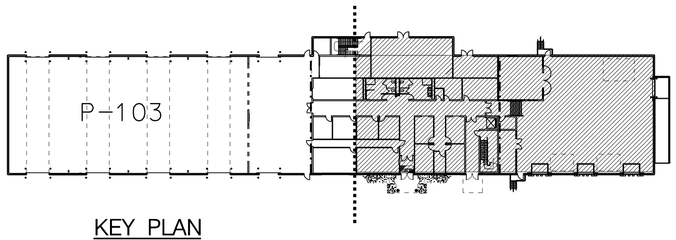

KEY PLAN

SCALE 1:500

ALL DIMENSIONS ARE IN MILLIMETERS EXCEPT AS NOTED

US Army Corps of Engineers
New York District

U.S. ARMY ENGINEER DISTRICT
CORPS OF ENGINEERS
NEW YORK, NEW YORK

PN 57708
FORCE MODERNIZATION EDUCATION /TRANSITIONAL FACILITY
FORT DRUM, NEW YORK

1st FLOOR PLAN-STORM DRAIN (SHEET 2)

Sheet reference number:
P-104

Submitted by: e3endem3 Plot Date: 04-AUG-2005 12:09
S:\fileroom\military\Fort Drum\ForceMOD\Mechanical\100% Submittal\ForceMOD57708_PP-104xxx.dgn

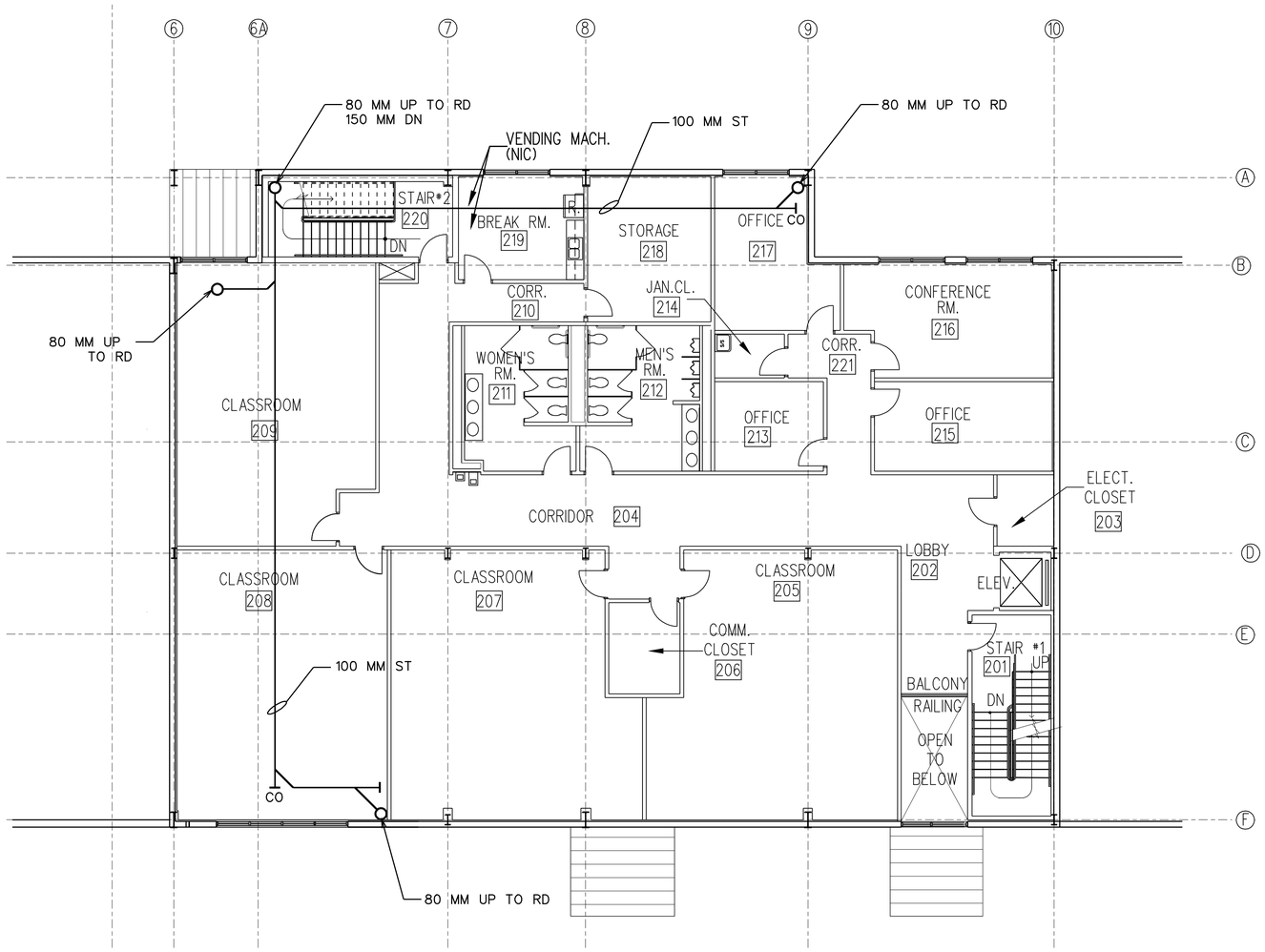

SECOND FLOOR PLAN - STORM DRAIN

SCALE: 1:100

SCALE: 1:100

0 2000 4000 10000

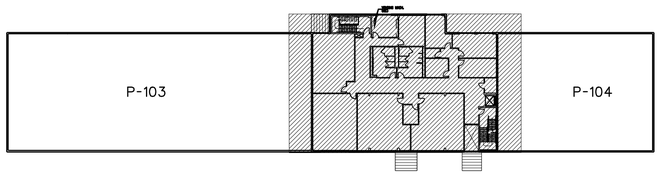

KEY PLAN

ALL DIMENSIONS ARE IN MILLIMETERS EXCEPT AS NOTED

US Army Corps of Engineers
New York District

U.S. ARMY ENGINEER DISTRICT
CORPS OF ENGINEERS
NEW YORK, NEW YORK

Designed by: Date:
Dwn by: Ckd by: Solicitation no.:
Reviewed by: Contract no.:
Submitted by: Plot date: 04-AUG-2005 12:09
Plot by: e3endem3
Scale: 1:200(X)1:100(Y)
File name: S:\filroom\military\fort Drum\Force\DD\Mechanical\100% Submittal\FORCEMOD57708_PP-105xxx.dgn

PN 57708
FORCE MODERNIZATION EDUCATION (TRANSITIONAL FACILITY)
FORT DRUM, NEW YORK

2ND FLR PLAN-
STORM DRAIN

Sheet reference number:
P-105

Submitted by: e3endem3
S:\filroom\military\Fort Drum\Force\MOD\Mechanical\100% Submittal\ForceMOD57708_PP-105xxx.dgn
Plot Date: 04-AUG-2005 12:09

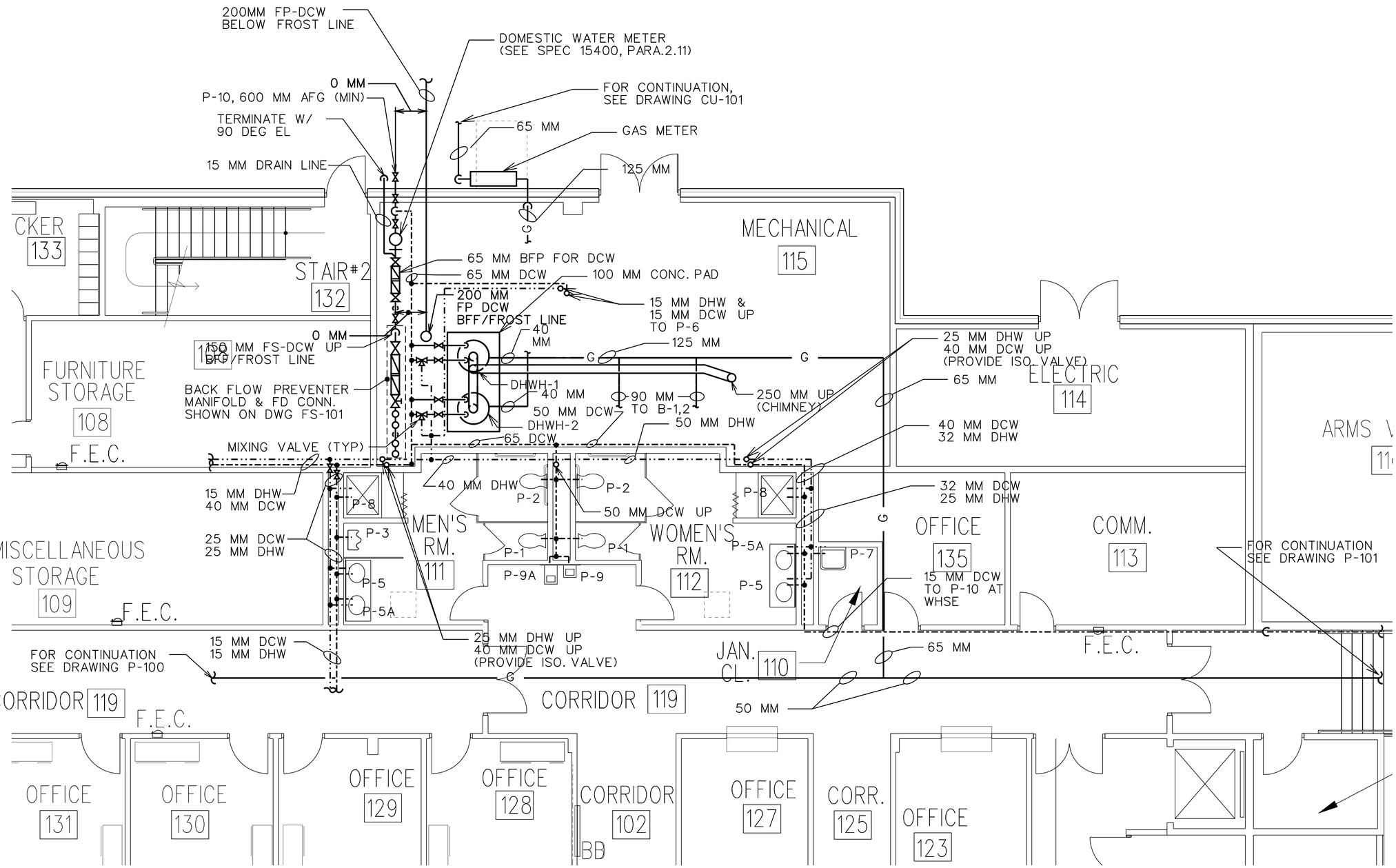

1 PART PLAN – HOT & COLD WATER

P–101 P–400

PROC. VEH/ADMIN/WHSE
SCALE 1:50

NOTE:

1. FOR PIPE SIZES COORDINATE WITH DRAWING P-601.

ALL DIMENSIONS ARE IN MILLIMETERS
UNLESS OTHERWISE NOTED

US Army Corps of Engineers
New York District

Mark	Description	Date	Appr.

U.S. ARMY ENGINEER DISTRICT
CORPS OF ENGINEERS
NEW YORK, NEW YORK

Designed by: NAME
Dwn by: NAME
Ckd by: NAME
Reviewed by: NAME
Submitted by: NAME
Date: 10 Nov. 2006
Solicitation no.: DACA51-A-05-0000
Contract no.: DACA51-A-00-0000
Plot date: 08-AUG-2005 10:38
Plot by: ALLEN, JOHN
Scale: 1:200/0.1:200/50
File name: S:\Banner Military Fort Drum\Facility\Mechanical\100%_Submittal\Forcemod\DGN\PP_400xxx.dgn
Size: 24x36

FORCE MODERNIZATION EDUCATION FACILITY
FORT DRUM, NEW YORK

PART PLAN 1st FLR
PLUMBING (DCW & DHW)

PN 57708

Sheet reference number:
P–400

SUBMITTED BY: E3ENDFWB
S:\FILEROOM\MILITARY\FORT DRUM\FORCEMOD\MECHANICAL\100% SUBMITTAL\FORCEMOD57708_PP-400XXX.DGN
PLOT DATE: 08-AUG-2005 10:38

SHEET FILE: C:\CADD STANDARDS\working mec\MORDER_SHEET_2005-3-BBM-A1.dgn

NOTES:
1) FOR SIZE AND LOCATION OF ACCESS PANEL (AP) SEE ARCHITECTURAL DWGS. COORDINATE WITH LOCATION OF CLEAN OUT.
2) LOCATE SUMP PUMP IN 600X600X600 SUMP PIT. COORDINATE WITH ELECTRICAL. SUMP PUMP SHALL BE 1.27 L\S, 15240 MM HEAD, 373 W, 208 V, 3 PH, 60 Hz, 57.51 RPS WITH INTEGRAL FULLY SUBMERSIBLE FLOAT SWITCH FOR AUTOMATIC CONTROL OF PUMP. PROVIDE DISCHARGE CONNECTION TO SIGHT DRAIN AND VENT. PROVIDE HIGH WATER ALARM.
3) TRAP LIQUID SEAL SHALL NOT BE LESS THAN 102 MM, PER INTERNATIONAL PLUMBING CODE.

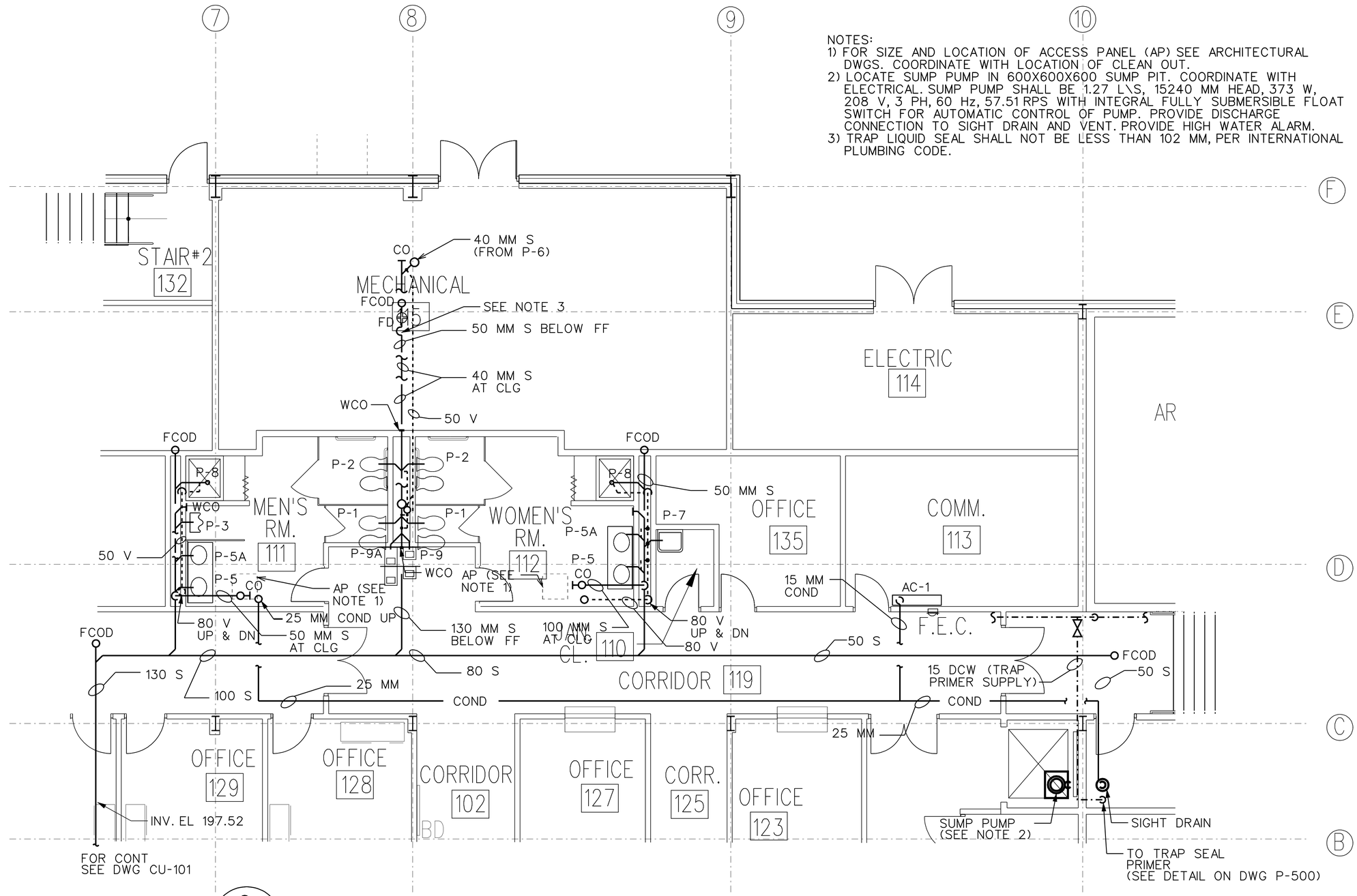

2
P-101 P-401

PART PLAN – SANITARY SEWER

PROC. VEH./ADMIN./WHSE
SCALE 1:50

ALL DIMENSIONS ARE IN MILLIMETERS
UNLESS OTHERWISE NOTED

US Army Corps of Engineers
New York District

No.	Description	Date	Appr.

U.S. ARMY ENGINEER DISTRICT
CORPS OF ENGINEERS
NEW YORK, NEW YORK

Designed by: Date:
Dwn by: Ckd by: Solicitation no.:
Reviewed by: Contract no.:
Submitted by: Plot date: 09-AUG-2005 11:36
Plot by: e3endem3
Scale: 1:50000/1:50000
File name: S:\Benson military\fort Drum\FORCE\Mechanical\MOD_Submittal\submittal\PP_401xxx.dgn

FORCE MODERNIZATION EDUCATION (TRANSITIONAL FACILITY)
FORT DRUM, NEW YORK

PART PLAN – FIRST FLR
PLUMBING
(SEWER)

PN 57708

Sheet reference number:
P-401

Plot Date: 09-AUG-2005 11:36
Submitted by: e3endem3
S:\filer-room\military\Fort Drum\FORCE\MOD\Mechanical\100% Submittal\ForceMOD57708_PP-401xxx.dgn

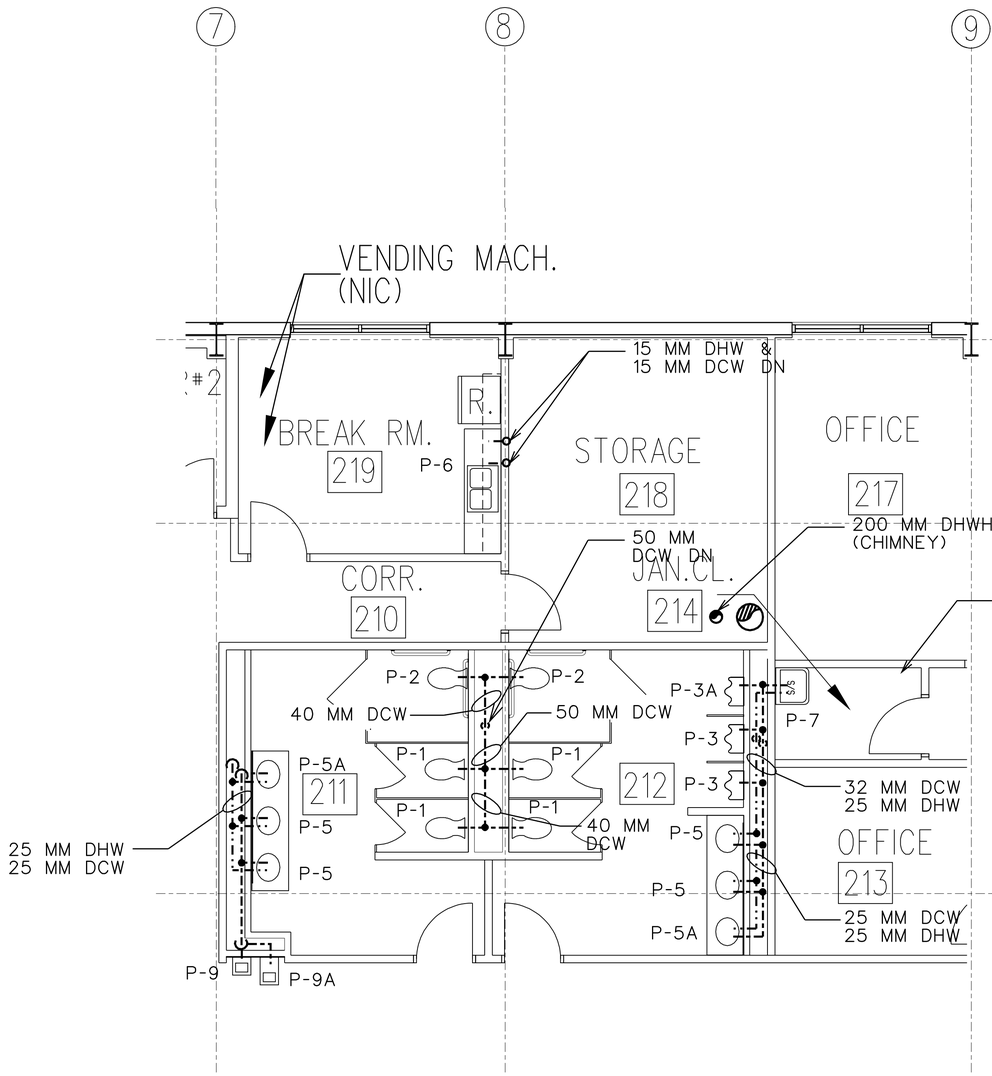

3 PART PLAN – HOT & COLD WATER

P–102 P–402

PROC. VEH./ADMIN./WHSE
SCALE 1:50

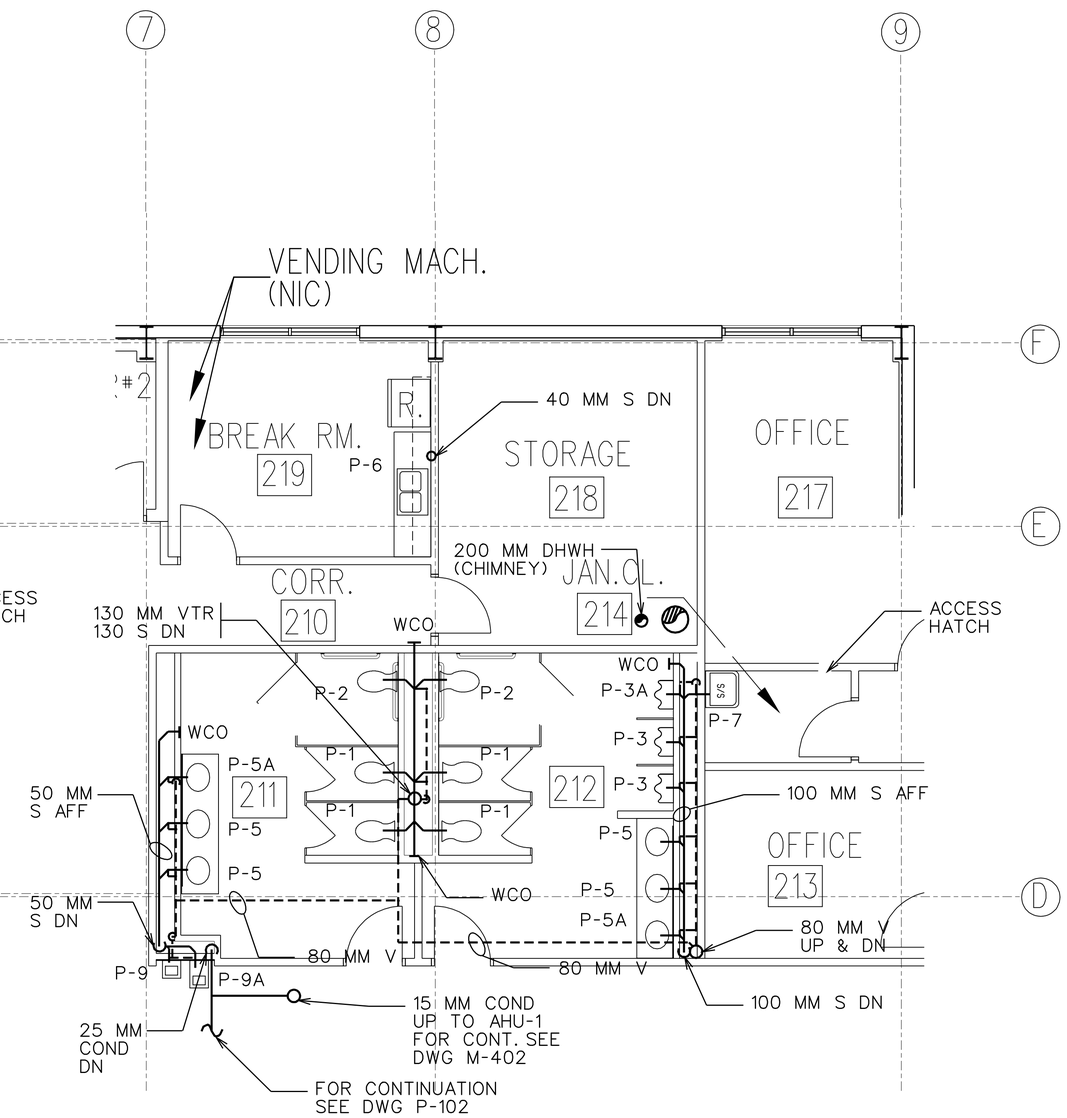

4 PART PLAN – SANITARY SEWER

P–102 P–402

PROC. VEH./ADMIN./WHSE
SCALE 1:50

US Army Corps of Engineers
New York District

U.S. ARMY ENGINEER DISTRICT
CORPS OF ENGINEERS
NEW YORK, NEW YORK

Designed by: Date:
Dwn by: Ckd by: Solicitation no.:
Reviewed by: Contract no.:
Submitted by: Plot date: 08-AUG-2005 10:38 Plot scale: 1:1 Plot time: 00:00:00.00000

File name: S:\Mission Military\Fort Drum\FORCEMOD\Mechanical\DWG_Submittal\mod057708_pp-402xxx.dgn

PN 57708
FORCE MODERNIZATION EDUCATION / TRANSITIONAL FACILITY
FORT DRUM, NEW YORK
PART PLAN – 2ND FLR
PLUMBING
(DCW,DHW & SEWER)

Sheet reference number:
P–402

SUBMITTED BY: E3ENDFWB
S:\FILEROOM\MILITARY\FORT DRUM\FORCEMOD\MECHANICAL\100% SUBMITTAL\FORCEMOD57708_PP-402XXX.DGN
PLOT DATE: 08-AUG-2005 10:38

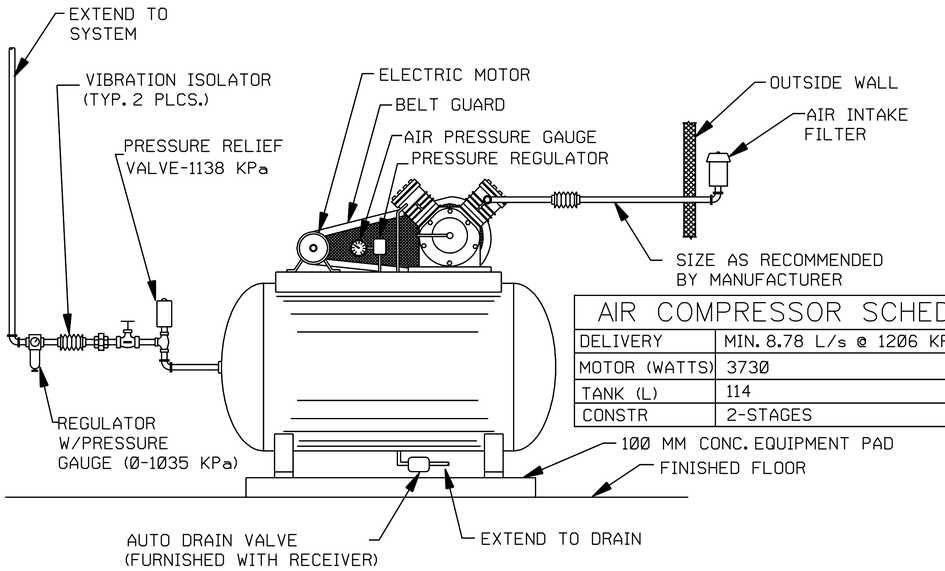

AIR COMPRESSOR SCHEDULE	
DELIVERY	MIN. 8.78 L/s @ 1206 KPa
MOTOR (WATTS)	3730
TANK (L)	114
CONSTR	2-STAGES

TYPICAL HORIZONTAL AIR COMPRESSOR DETAIL

NTS

STARTING AND STOPPING PRESSURE TO BE SET BASED ON AIR COMSUMING EQUIPMENT. PROVIDE PRESSURE REDUCING VALVE AS REQUIRED. (SEE TYPICAL COMPRESSED AIR OUTLET DETAIL)

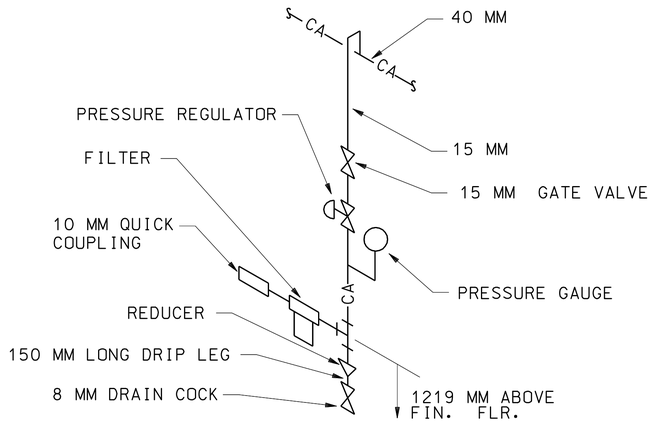

TYPICAL COMPRESSED AIR OUTLET

NTS

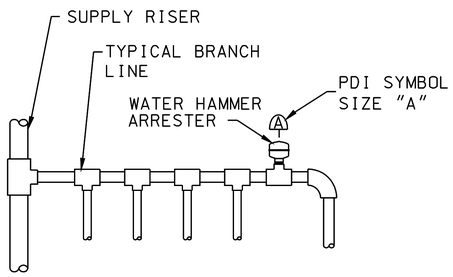

NOTES:

WATER HAMMER ARRESTER INSTALLATION DETAIL

NTS

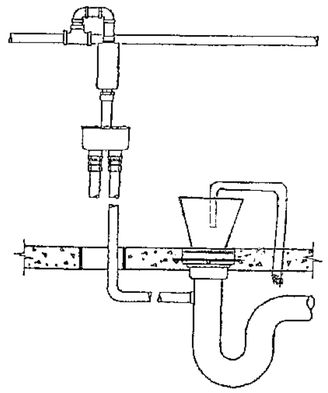

TRAP SEAL PRIMER DETAIL

NTS

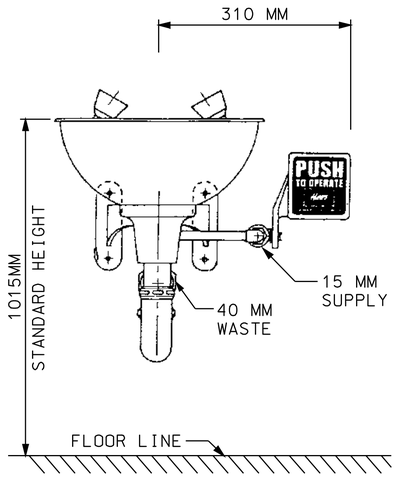

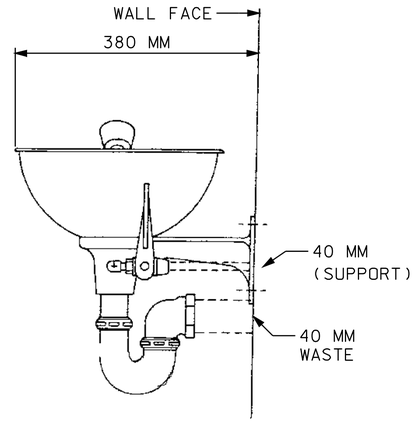

THESE ROUGHING IN DIMENSIONS MAY VARY .113M±

EYE & FACE WASH

NTS

WATER HAMMER ARRESTER SCHEDULE						
PDI UNITS	A	B	C	D	E	F
FIXTURE UNIT RATING	1-11	12-32	33-60	61-113	114-154	155-330

US Army Corps of Engineers New York District

No.	Description	Date	Appr.

Designed by: NAME | Date: 01 NOV. 2005 | Date: 2006 JUL
Dwn By: NAME | Ckd By: NAME | Solicitation no.: DACA51-A-05-0000
Contract no.: DACW51-0-05-0000
Approved by: NAME | Pkg date: 04-AUG-2005 12:08
Submitted by: NAME | Plot date: 04-AUG-2005 12:08
Scale: 1:0000/1:00000

U.S. ARMY ENGINEER DISTRICT CORPS OF ENGINEERS NEW YORK, NEW YORK

File name: S:\Mission military\Fort Drum\Fort Drum\Mechanical\Old_Submittal\Archive\Drawing A-200xxx.dgn

FORCE MODERNIZATION EDUCATION (TRANSITIONAL FACILITY) FORT DRUM, NEW YORK

PN 57708

DETAILS - PLUMBING

Sheet reference number: P-500

SHEET FILE: S:\DACO_STANDARDS\drafting mech\DACO_SHEET_2000-0-0000-A.dgn

Submitted by: e3endem3
S:\fileroom\military\Fort Drum\ForceMOD\Mechanical\100% Submittal\ForceMOD57708_P-500xxx.dgn
Plot Date: 04-AUG-2005 12:08

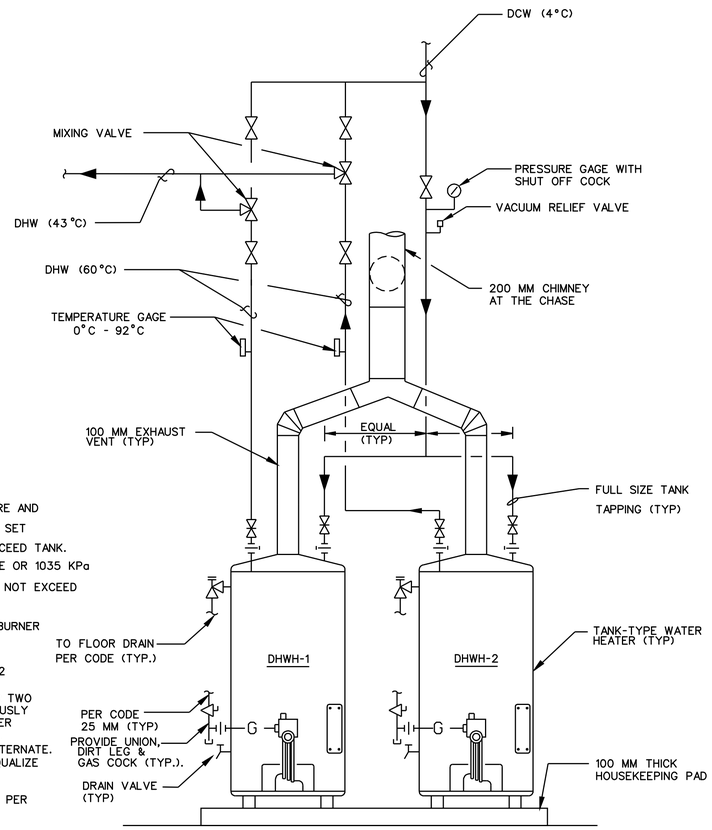

NOTES:

1) PROVIDE AGA TEMPERATURE AND PRESSURE RELIEF VALVE. SET PRESSURE SHALL NOT EXCEED TANK. RATED WORKING PRESSURE OR 1035 KPa SET TEMPERATURE SHALL NOT EXCEED 99°C AGA TEMPERATURE RATING OR EXCEED MAX BURNER INPUT RATING.

2) UNITS DHWH-1 AND DHWH-2 TO OPERATE ONE AT A TIME WITH PROVISION FOR TWO UNIT TO RUN SIMULTANEOUSLY IF DEMAND FOR HOT WATER ARISES. PROVIDE CONTROL FOR UNITS TO RUN IN ALTERNATE. "LEAD-LAG" START TO EQUALIZE USAGE.

2) PROVIDE EXPANSION TANK PER SPEC. & MANUFACTURERS RECOMMENDATION.

VEH. PROC./ADMIN./WHSE/CLASSROOM WATER HEATER PIPING DIAGRAM

NTS

PLUMBING FIXTURE SCHEDULE

FIXTURE NO.	DESCRIPTION	CONNECTIONS MM				REMARKS
		WASTE	VENT	DCW	DHW	
P-1	WATER CLOSET	100	50	25	——	
P-2	WATER CLOSET, HC	100	50	25	——	
P-3	URINAL	80	50	20	——	
P-3A	URINAL (HC)	80	50	20	——	
P-5	LAVATORY (VANITY)	40	40	10	10	SEE NOTE 1
P-5A	LAVATORY (VANITY, HC)	40	40	10	10	SEE NOTE 1
P-6	KITCHEN SINK	50	40	15	15	
P-7	SERVICE SINK	50	40	15	15	
P-8	SHOWER	50	40	15	15	
P-8A	SHOWER, HC	50	40	15	15	PRE-FAB UNIT, SEE NOTE 2
P-9	ELECTRIC WATER COOLER	40	40	10	——	
P-9A	ELECTRIC WATER COOLER, HC	40	40	10	——	
P-10	WALL HYDRANT	——	——	15	——	
P-11	HOSE BIBB	——	——	15	——	
P-12	EMER. EYE WASH & FACE WASH	40	——	15	——	SEE NOTE 3

NOTES:
1. SEE ARCH. SPECS. AND DRAWINGS FOR COUNTERTOP DETAIL
2. SEE ARCH. SPECS.& DRAWING FOR SHOWER DESCRIPTION.
3. PROVIDE PRESSURE-COMPENSATED TEMPERING VALVE. SEE SPECIFICATIONS. .

DOMESTIC HOT WATER HEATER SCHEDULE

UNIT NO.	STORAGE (L)	RECOVERY (LPH)	(KW) INPUT PER HR	TEMP RISE °C	FUEL TYPE	REMARKS
DHWH-1	424	1,832	73	56	NATURAL GAS	LOCATED IN M.E.R.
DHWH-2	424	1,832	73	56	NATURAL GAS	LOCATED IN M.E.R.

US Army Corps of Engineers
New York District

U.S. ARMY ENGINEER DISTRICT
CORPS OF ENGINEERS
NEW YORK, NEW YORK

FORCE MODERNIZATION EDUCATION CENTER (TRANSITIONAL FACILITY FOR DRAFTING) FORT DRUM, NEW YORK

PLUMBING SCHEDULES & SCHEMATICS

Sheet reference number: P-600

Submitted by: e3endem3 Plot Date: 04-AUG-2005 12:08
s:\fileroom\military\Fort DrumForceMOD\Mechanical\100% Submittal\ForceMOD57708_P-600xxx.dgn

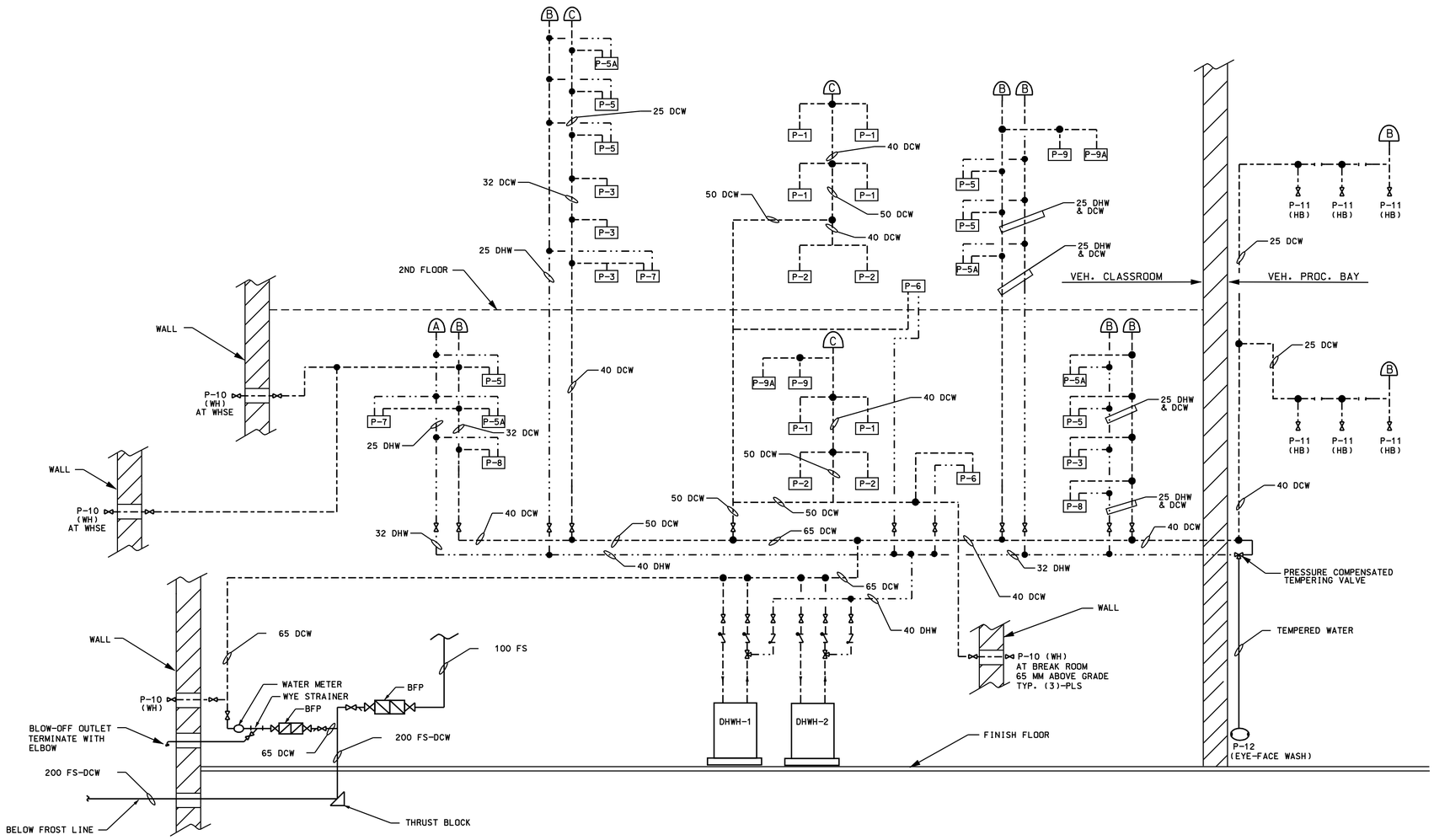

NOTE:
FLOW OF WATER ENTERING BUILDING IS
5318 LITERS PER MINUTE AT A PRESSURE
OF 445 KPA

WATER PIPING RISING DIAGRAM

N.T.S.

ALL DIMENSIONS ARE IN MILLIMETERS
UNLESS OTHERWISE NOTED

US Army Corps of Engineers
New York District

Mark	Description	Date	Appr.

Mark	Description	Date	Appr.

Date:
Rev. No.:
Designed by:
Date:
Dwn by:
Ckd by:
Reviewed by:
Submitted by:
Solicitation no.:
Contract no.:
Plot date: 04-AUG-2005 12:08
Plot scale: 1:1
Sheet: 1:0000x1:0000
File name: E:\Tenant\military\fort drum\models\Mechanical\100% Submittal\forceMOD\57708_P-601xxx.dgn

U.S. ARMY ENGINEER DISTRICT
CORPS OF ENGINEERS
NEW YORK, NEW YORK

FORCE MODERNIZATION EDUCATION /TRANSITIONAL FACILITY
FORT DRUM, NEW YORK
PN 57708

PLUMBING RISER DIAG. (DCW & DHW)

Sheet reference number:
P-601

Submitted by: e3endem3
S:\fileroom\military\Fort Drum\ForceMOD\Mechanical\100% Submittal\ForceMOD57708_P-601xxx.dgn
Plot Date: 04-AUG-2005 12:08

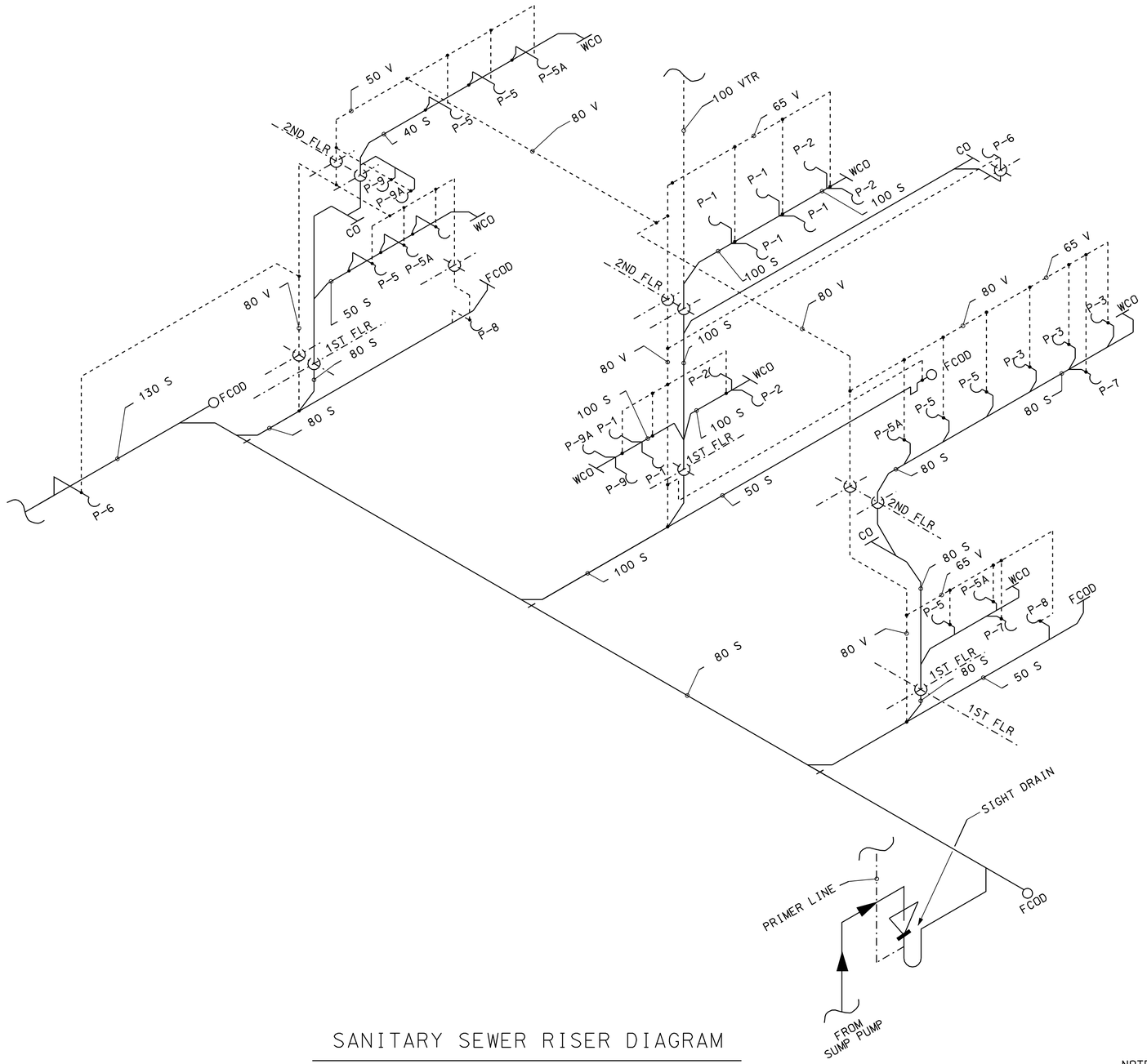

SANITARY SEWER RISER DIAGRAM

N.T.S.

NOTE:
ALL DIMENSIONS ARE IN MILLIMETERS
UNLESS OTHERWISE NOTED

US Army Corps of Engineers
New York District

U.S. ARMY ENGINEER DISTRICT
CORPS OF ENGINEERS
NEW YORK, NEW YORK

PN 57708
FORCE MODERNIZATION EDUCATION /TRANSITIONAL FACILITY
FORT DRUM, NEW YORK

PLUMBING RISER DIAGRAM
(SEWER)

Sheet reference number:
P-602

Submitted by: e3endem3 Plot Date: 04-AUG-2005 12:08
S:\fileroom\military\Fort Drum\ForceMOD\Mechanical\100% Submittal\ForceMOD57708_P-602xxx.dgn

MECHANICAL DRAWING ABBREVIATIONS AND SYMBOLS (HVAC)

ABBREVIATIONS

A

ADDIT	ADDITIVE
ACS	AUTOMATIC CONTROL SYSTEM
ACU-1	AIR CONDITIONING UNIT (UNIT No. 1)
AD	ACCESS DOOR
AF	AIR FILTER
AFF	ABOVE FINISHED FLOOR
AHU-1	AIR HANDLING UNIT (UNIT No. 1)
AL	ACOUSTIC LINING
ALUM	ALUMINUM
AMCS	AUTOMATED MONITORING CONTROL SYSTEM
AP	ACCESS PANEL
ACC SEC	ACCESS SECTION
ATC	AUTOMATIC TEMPERATURE CONTROL
AS-1	AIR SEPARATOR (UNIT No.1)
AS	ACOUSTICAL SILENSER
AV	AUTOMATIC VENT
APD	AIR PRESSURE DIFFERENTIAL

B

BG	BOTTOM GRILLE
BW	BRAKE WATTS
BR	BOTTOM REGISTER
BT	BOTTOM THROAT
BDD	BACK DRAFT DAMPER
B-1	BOILER NO.1

C

C	CELISUS
CC	COOLING COIL
CD	CEILING DIFFUSER
CLD	CEILING LINEAR DIFFUSER
CLR	CEILING LINEAR REGISTER
CG	CEILING GRILLE
CH-1	CHILLER NO. 1
CHWP-1	CHILLED WATER PUMP (UNIT No. 1)
CHWR	CHILLED WATER RETURN
CHWS	CHILLED WATER SUPPLY
CS	CIRCUIT SETTER
CLG	CEILING
CMS	CUBIC METERS PER SECOND
COMPR	COMPRESSOR
COND	CONDENSATE
CONN	CONNECT, CONNECTION
CONV	CONVERTER
CPA	CONTROL POINT ADJUST
CP-1	CIRCULATING PUMP (UNIT No. 1)
CR	CEILING REGISTER
CU	COPPER
CUH-1	CABINET UNIT HEATER (UNIT NO.1)
CU-1	CONDENSING UNIT (UNIT NO.1)
CWP-1	CONDENSER WATER PUMP (UNIT No. 1)
CAP	CAPACITY
CENT.	CENTRIFUGAL
CF-1	CHEMICAL FEEDER (UNIT No. 1)
CV-A	CONVECTOR TYPE A
CW	COLD WATER
CRU-1	CONDENSATE RETURN UNIT (NO.1)
CHWS	CHILLED HOT WATER SUPPLY
CHWR	CHILLED HOT WATER RETURN
CHWRR	CHILLED HOT WATER REVERSE RETURN
CWS	CHILLED WATER SUPPLY
CWR	CHILLED WATER RETURN

D

D	DROP , DAMPER
DB	DRY BULB
DHU	DEHUMIDIFIER
DHW-1	DOMESTIC HOT WATER (UNIT No. 1)
DIAM	DIAMETER
DN	DOWN
DPC	DIFFERENTIAL PRESSURE CONTROLLER
DWG	DRAWING
DX-1	DIRECT EXPANSION (UNIT No. 1)
DMPR	DAMPER

E

EA	EACH
EAT	ENTERING AIR TEMPERATURE
EDB	ENTERING DRY BULB TEMPERATURE
EDR	EQUIVALENT DIRECT RADIATION
EF-1	EXHAUST FAN (UNIT No. 1)
EL	ELEVATION
ELEC	ELECTRIC
ENT	ENTERING
ET-1	EXPANSION TANK (UNIT No. 1)

E

EQ	EQUAL
ER	EXHAUST REGISTER
ET-1	EXPANSION TANK (UNIT No. 1)
EWB	ENTERING WET BULB
EWT	ENTERING WATER TEMPERATURE
EXH	EXHAUST
EXP	EXPANSION
E.J.	EXPANSION JOINT

F

F	FILTER
F&T	FLOAT AND THERMOSTATIC
FA	FREE AREA (SQ METERS)
FC	FLEXIBLE CONNECTION
FD	FIRE DAMPER
FF	FINAL FILTER
FG	FINISHED GRADE
FIN FL	FINISHED FLOOR
FND	FOUNDATION DRAIN
FEC	FIRE EXTINGUISHER CABINET
FPLM	FINS PER LINEAR METER
FPS	FEET PER SECOND
FT-1	FIN TUBE RADIATION (TYPE FT-1)
FV	FACE VELOCITY
FMS	FLOW MEASURING STATION

G

GA	GROSS AREA
GMT-1	GLYCOL MAKEUP TANK (UNIT No. 1)
GX	GENERAL EXHAUST
GFE	GOVERNMENT FURNISHED EQUIPMENT
GR	HOT WATER/30% GLYCOL RETURN
GS	HOT WATER/30% GLYCOL SUPPLY
GSP	GLYCOL SOLUTION PUMP

H

H	HEIGHT
HC-1	HEATING COIL (UNIT No. 1)
HC EWC	HANDICAP ELECTRIC WATER COOLER
HD	HEAVY DUTY
HOA	HAND/OFF/AUTO
HR	HOUR
HS	HIGH SPEED
HTG	HEATING
HUM	HUMIDIFIER
HWP-1	HOT WATER PUMP (UNIT No. 1)
HV	HEATING AND VENTILATING
HX	HEAT EXCHANGER
HZ	HERTZ
H STAT	HUMIDISTAT
HWS	HOT WATER SUPPLY (HEATING)
HWR	HOT WATER RETURN (HEATING)

I

ID	INSIDE DIAMETER
IPS	IRON PIPE SIZE
IRH-1	INFRARED HEATER (UNIT No. 1)

K

KW	KILOWATT
KH-1	KITCHEN HOOD NO.1
KG/MM2	KILOGRAMS PER MILLIMETERS SQUARED

L

L	LITERS
LAT	LEAVING AIR TEMPERATURE
LCP	LOCAL CONTROL PANEL
LCV	LEVEL CONTROL VALVE
LD	LINEAR DIFFUSER
LDB	LEAVING DRY BULB TEMPERATURE
LIN M	LINEAR METERS
LPH	LITERS PER HOUR
LS	LOW SPEED
L/S	LITERS PER SECOND
LVG	LEAVING
LWB	LEAVING WET BULB TEMPERATURE
LWT	LEAVING WATER TEMPERATURE

M

M	METER
M/S	METERS PER SECOND
MAU	MAKE-UP AIR UNIT
MAX	MAXIMUM
MCC	MOTOR CONTROL CENTER
MD	MOTORIZED DAMPER
MER	MECHANICAL EQUIPMENT ROOM
MW	MOTOR WATTS
MIM	MINIMUM
MOT	MOTOR
MTG	MOUNTING
MXB	MIXING BOX
MUW	MAKE UP WATER
MM	MILLIMETER

N

NC	NORMALLY CLOSED
NIC	NOT IN CONTRACT
NO	NORMALLY OPEN
NPSH	NET POSITIVE SUCTION HEAD
NTS	NOT TO SCALE

O

OA	OUTSIDE AIR
OAI	OUTSIDE AIR INTAKE
OD	OUTSIDE DIAMETER
OV	OUTLET VELOCITY
OPER	OPERATOR, OPERATING
OPNG	OPENING

P

P-1	PUMP NO. 1
Pa	PASCALS
PD	PRESSURE DROP
PF	PREFILTER
PG	PRESSURE GAUGE
PHC	PREHEAT COIL
PHWP-1	PRIMARY HOT WATER PUMP (UNIT No. 1)
PRV	PRESSURE REDUCING VALVE
PVC	POLYVINYL CHLORIDE
PH	PHASE
PRESS	PRESSURE

R

R	RISE
RA	RETURN AIR
RAD	RADIATION
REL AIR	RELIEF AIR
REFR	REFRIGERANT
RF	RETURN FAN
RFP-1	RADIANT FLOOR PUMP (UNIT No. 1)
RH	RELATIVE HUMIDITY
RHC	REHEAT COIL
RM	ROOM
ROH	RELIEF/OUTLET HOOD
ROT	ROTATION
RPF	ROLL PREFILTER
RPS	REVOLUTIONS PER SECOND
RR	RETURN REGISTER
RECVR.	RECEIVER
RHWS	RADIANT HOT WATER SUPPLY
RHWR	RADIANT HOT WATER RETURN
RHWRR	RADIANT HOT WATER REVERSE RETURN

S

SA	SUPPLY AIR
SC	SPOT COOLER
SF	SUPPLY FAN
SP	STATIC PRESSURE
SPS	STATIC PRESSURE SENSOR
SPEC	SPECIFICATION
SR	SUPPLY REGISTER
STGS	STAGES
SS	STAINLESS STEEL
SUCT	SUCTION
SMK D.	SMOKE DAMPER
SMK/FD	COMBINATION SMOKE & FIRE DAMPER

T

T	THROAT
TA	THROW AWAY
TA	TRANSFER AIR
TDH	TOTAL DYNAMIC HEAD
TEMP	TEMPERATURE
TF	TERMINAL FILTER
TC-1	TEMPERING COIL NO. 1
TG	TRANSFER GRILL
TG	TOP GRILLE
TR	TOP REGISTER
TRF	TRANSFER FAN
TRG	TRANSFER GRILLE
TS	TIP SPEED
(T) STAT	THERMOSTAT
TT	TOP THROAT
TV	TURNING VANES
TYP	TYPICAL
TX	TOILET EXHAUST
TC	TEMPERATURE CONTROL SENSOR
(TC)	TEMPERATURE CONTROLLER
[T]	TEMPERATURE INDICATION

U

UH-1	UNIT HEATER (UNIT UH-1)

V

V	VOLTS
VAV-1	VARIABLE AIR VOLUME (UNIT No. 1)
VFD	VARIABLE FREQUENCY DRIVE
VIV	VARIABLE INLET VANES
VD	VOLUME DAMPER
VI	VIBRATION ISOLATORS

W

W	WATTS
W/	WITH
W/O	WITHOUT
WB	WET BULB
WC	WATER COLUMN
WG	WATER GAUGE
WMS	WIRE MESH SCREEN
WP	WORKING PRESSURE, WEATHER PROOF
WPD	WATER PRESSURE DROP
WT	WEIGHT

SYMBOLS

SYMBOL	DESCRIPTION
	SUPPLY DUCT UP
	SUPPLY DUCT DOWN
	EXHAUST OR RETURN DUCT UP
	EXHAUST OR RETURN DUCT DOWN
	FLEXIBLE CONNECTOR
	SUPPLY AIR REGISTER (ARROW INDICATE TYPE 2-WAY, 3-WAY OR 4-WAY)
	CEILING AIR DIFFUSER (4-WAY) THROW UNLESS OTHERWISE NOTED)
	RETURN AIR REGISTER
	TURNING VANES
MD	MOTORIZED DAMPER
FD	FIRE DAMPER
VD	VOLUME DAMPER
	AUTOMATIC VENT
	MANUAL VENT
	DIRECTION OF FLOW
PRV	PRESSURE REDUCING VALVE
	GATE VALVE
	GLOBE VALVE
	IN-LINE STRAINER W/GATE VALVE & CAPPED PIPE
	IN-LINE STRAINER
	CIRCUIT SETTER
	CONTROL VALVE (2-WAY)
	CONTROL VALVE (3-WAY), CHANGE-OVER VALVE
	RELIEF VALVE
PDC	PRESSURE DIFFERENTIAL CONTROLLER
	TEMP & PRESS RELIEF VALVE
P	PRESSURE GAUGE WITH COCK
	BALANCING COCK
	FLEXIBLE PIPE CONNECTION
	REDUCER (ECCENTRIC), FLAT ON TOP
	CONCENTRIC REDUCER/INCREASER
	COMBINATION BALANCING & SHUT OFF VALVE
	PIPE GUIDE
	ANCHOR
	UNION
	UNDERCUT DOOR
	LOUVER DOOR
	FLOW CONTROL/BALANCING VALVE

SYMBOL	DESCRIPTION
1	LINEAR DIFFUSER (TAG No. 1)
1	GRILLE/DIFFUSER/REGISTER (TAG No. 1)
	EXPANSION JOINT
	POINT OF CONNECTION
H	HUMIDISTAT
S	SENSOR
T	THERMOSTAT
T	TEMPERATURE INDICATOR
R	TEMPERATURE RESET INTERFACE
TC	TEMPERAURE CONTROLLER
CM	CARBON MONOXIDE DETECTOR
	ACOUSTICALLY LINED DUCT
	LINEAR SLOT DIFFUSER
	IN-LINE PUMP
	UNIT HEATER
— CHWS —	CHILLED WATER SUPPLY
— CHWR —	CHILLED WATER RETURN
— COND —	CONDENSATE
— HWS —	HOT WATER SUPPLY
— HWR —	HOT WATER RETURN
— RL —	REFRIGERANT LIQUID
— RG —	REFRIGERANT GAS

NOTE:
THIS IS A GENERAL LIST OF ABBREVIATIONS AND SYMBOLS. NOT ALL ENTRIES MAY APPLY TO THIS PROJECT.

US Army Corps of Engineers
New York District

Mark	Description	Date	Appr.

Designed by:
Dwn by: Ckd by:
Reviewed by:
Submitted by:
Date:
Solicitation no.:
Contract no.:
Plot date: 04-AUG-2005 12:03
Plot scale: 1:1
Size: 22x34
File name: E:\Temp\military\ForceDrum\ForceMOD\Mechanical\100% Submittal\ForceMOD57708_M-001xxx.dgn

U.S. ARMY ENGINEER DISTRICT
CORPS OF ENGINEERS
NEW YORK, NEW YORK

PN 57708
FORCE MODERNIZATION EDUCATION (TRANSITIONAL FACILITY
FORT DRUM, NEW YORK

SYMBOLS & ABBREVIATIONS
HVAC

Sheet reference number:
M-001

Submitted by: e3endem3
S:\filer\om\military\fort Drum\ForceMOD\Mechanical\100% Submittal\ForceMOD57708_M-001xxx.dgn
Plot Date: 04-AUG-2005 12:03

GENERAL NOTES

1. WHEREVER THE REQUIREMENTS AND REGULATIONS OF FEDERAL OR MUNICIPAL AUTHORITIES ARE MORE STRINGENT THAN THE REQUIREMENTS INDICATED ON THE DRAWINGS OR SPECIFICATIONS THEY SHALL TAKE PRECEDENCE OVER THE DRAWINGS OR SPECIFICATIONS AND SHALL BE MADE PART OF THE CONTRACT AT NO ADDITIONAL COST TO THE OWNER. HOWEVER WHERE THE DRAWING OR SPECIFICATIONS ARE MORE STRINGENT THAN FEDERAL OR LOCAL AUTHORITY REQUIREMENTS AND REGULATION, THE MORE STRINGENT SHALL APPLY AND THE WORK SHALL BE INCLUDED IN THE CONTRACT.

2. EQUIPMENT SIZES ARE BASED ON PRELIMINARY INFORMATION FROM REPRESENTATIVE

MANUFACTURERS. THE CONTRACTOR SHALL INDICATE CERTIFIED DIMENSIONS FROM MANUFACTURERS IN HIS SHOP DRAWINGS.

3. HOUSEKEEPING PAD AND SPACE ALLOCATIONS FOR MECHANICAL EQUIPMENT ARE BASED ON REPRESENTATIVE MANUFACTURER'S PHYSICAL EQUIPMENT SIZES. THE CONTRACTOR SHALL BE RESPONSIBLE FOR CHECKING ANY SUBSTITUTED EQUIPMENT SIZES FROM CERTIFIED MANUFACTURER'S DRAWINGS AND SHALL MAKE MODIFICATIONS WITHOUT ANY ADDITIONAL COST TO THE GOVERNMENT.

4. ELECTRICAL POWER PROVISIONS FOR MECHANICAL EQUIPMENT ARE BASED ON PRELIMINARY INFORMATION FROM REPRESENTATIVE MANUFACTURER. THE CONTRACTOR SHALL BE RESPONSIBLE FOR CHECKING ELECTRICAL RATING FROM CERTIFIED DRAWINGS AND SHALL MAKE ANY CIRCUIT DISTRIBUTION MODIFICATION REQUIRED WITHOUT ANY ADDITIONAL COST TO THE OWNER FOR SUBSTITUTED EQUIPMENT. THE CONTRACTOR SHALL SUBMIT A SCHEDULE OF SUCH CHANGE FOR ACCEPTANCE BY THE ENGINEER. ALL ACCEPTED CHANGES SHALL BE RECORDED ON "AS-BUILT" DRAWINGS.

5. DUCTS AND PIPES SHALL BE INSTALLED AS HIGH AS POSSIBLE & AS CLOSE AS POSSIBLE TO CEILING/ FLOOR STRUCTURE TO MAINTAIN CEILING HEIGHTS SHOWN ON ARCHITECTURAL DRAWINGS AND TO MAINTAIN A MINIMUM OF 2032mm HEADROOM IN ALL MECHANICAL EQUIPMENT ROOMS.

6. FIRE DAMPERS SHALL HAVE A MINIMUM OF 2 HOUR RATING UNLESS OTHERWISE NOTED. REFER TO THE ARCHITECTURAL DRAWINGS FOR LOCATIONS OF FIRE RATED PARTITIONS. ALL DUCTS THROUGH RATED CONSTRUCTION SHALL BE PROVIDED WITH FIRE DAMPERS. PROVIDE ACCESS DOORS IN DUCTS TO FIRE DAMPERS.

7. CONTRACTOR SHALL PROVIDE VOLUME DAMPERS AT ALL BRANCH DUCTWORK PLUS WHEREVER REQUIRED FOR PURPOSE OF SYSTEM BALANCING. CONTRACTOR SHALL PROVIDE VOLUME DAMPERS AT EACH DIFFUSER AND REGISTER FOR AIR BALANCING PURPOSES. CONTRACTOR TO PROVIDE VOLUME DAMPERS AT ALL FLEXIBLE DUCT TAKEOFFS. CONTRACTOR SHALL PROVIDE SHEETMETAL INCREASERS/REDUCERS AS REQUIRED TO MAKE FLEX DUCT CONNECTIONS TO DIFFUSERS OR TAPS INTO DUCTWORK. NO VOLUME DAMPERS SHALL BE LOCATED UPSTREAM OF CAV TERMINALS.

8. DUCT TRANSITION SHALL BE FABRICATED WITH FLAT BOTTOMS UNLESS OTHERWISE NOTED.

9. PROVIDE SLEEVES FOR ALL PIPES PENETRATING WALLS AND FLOORS AS PER SPECIFICATIONS. ALL OPENING AROUND PENETRATIONS SHALL BE FIRE PROOFED WITH APPROVED MATERIALS.

10. SEAL ALL OPENINGS WHERE DUCTS AND PIPES PENETRATE NON RATED WALLS TO PREVENT AIR TRANSFER BETWEEN SPACES WITH APPROVED MATERIALS USE APPROVED FIRE STOPPING MATERIALS TO SEAL OPENINGS IN RATED WALLS.

11. WHERE TRANSFER DUCTS ARE INDICATED ON THE DRAWINGS, GRILLES SHALL BE PROVIDED ON BOTH SIDES OF THE WALL.

12. LOCATIONS OF ROOM THERMOSTATS ARE APPROXIMATE. FINAL LOCATIONS SHALL BE COORDINATED IN THE FIELD, AND APPROVED BY THE CONTRACTING OFFICER.

13. PROVIDE VALVED AND CAPPED CONNECTIONS TO ALL LOW POINTS IN PIPING SYSTEMS REQUIRED FOR DRAINAGE.

14. PROVIDE ALL AUTOMATIC OR MANUAL AIR VENTS AS REQUIRED AT ALL HIGH POINTS OF PIPING SYSTEM.

15. CONTRACTOR SHALL PROVIDE ALL NECESSARY VERTICAL PIPING FOR DROPS AND RISES IN PIPING TO CONNECT ALL EQUIPMENT TO COMPLETE THE SYSTEM AS PER PLANS AND SPECIFICATIONS WITHOUT ANY ADDITIONAL COST TO THE GOVERNMENT.

16. THE CONTRACTOR SHALL COORDINATE IN THE FIELD AND PROVIDE NECESSARY OFFSETS VERTICAL AND HORIZONTAL PIPING, FITTING AND VALVES AS REQUIRED WITHOUT ANY ADDITIONAL COST TO THE GOVERNMENT.

17. THE CONTRACTOR SHALL PROVIDE ALL NECESSARY CEILING DIFFUSERS, REGISTERS AND GRILLES. FRAME TYPE TO MATCH CEILING CONSTRUCTION IN WHICH UNITS ARE TO BE INSTALLED.

18. DUCTWORK TO OUTSIDE AIR INTAKE SHALL BE SEALED AIRTIGHT. PROVIDE DUCT TRANSITION PIECES OR PLENUMS AS REQUIRED TO SUIT WALL OPENINGS.

19. DUCTWORK SHALL BE PROVIDED IN ACCORDANCE WITH SMACNA AND ASHRAE'S LATEST EDITION AS NECESSARY TO MEET THE PERFORMANCE REQUIREMENTS OF THE DESIGN.

20. ALL DUCT SIZES INDICATED ARE INSIDE CLEAR DIMENSIONS. WHERE INTERNAL LINING OCCURS, INCREASE DUCT SIZES ACCORDINGLY BY THE LINING THICKNESS. FOR ACOUSTICAL LINING, REFER TO DETAILS AND SPECIFICATIONS.

21. COORDINATE ACCESS DOOR LOCATIONS IN HUNG CEILINGS AND WALLS WITH THE OTHER TRADES. SEE ARCHITECTURAL DRAWINGS FOR LOCATIONS REQUIRING FIRE RATED ACCESS. IN SUCH CASE PROVIDE 2 HR RATED DOORS WITH MINIMUM 50mm THICK FIRE RATED INSULATION.

22. THE WORK SHOWN ON THESE DRAWINGS ARE DIGRAMMATIC AND ARE INTENDED TO CONVEY THE SCOPE OF WORK INDICATING GENERAL ARRANGEMENT OF EQUIPMENT. THE CONTRACTOR MAY MAKE CHANGES IN HIS SHOP DRAWINGS AS APPROVED IN WRITING BY THE CONTRACTING OFFICER WITH NO ADDITIONAL COST. CONTRACTOR SHALL BE RESPONSIBLE TO VERIFY EXACT EXTENT OF WORK REQUIRED.

23. COORDINATE ALL WORK WITH OTHER TRADES AND EXISTING CONDITIONS TO AVOID CONFLICTS.

24. WORK SHALL BE DONE IN ACCORDANCE WITH ALL APPLICABLE CODES.

25. THE CONTRACTOR SHALL PROVIDE PROTECTION FOR THE GENERAL PUBLIC AND CONSTRUCTION WORKERS IN AND AROUND THE CONSTRUCTION AREA. ADEQUATE BARRIERS SHALL BE PROVIDED TO EXERCISE CONTROL OF SAFE INGRESS OF PREMISES. FIRE EXITS SHALL AT NO TIME BE BLOCKED.

26. ALL UNUSED MATERIALS AND DEBRIS SHALL BE LEGALLY DISPOSED OF AWAY FROM THE PREMISES.

27. DIMENSION REFER TO FINISH CONSTRUCTION (UNLESS OTHERWISE NOTED).

28. MINOR DETAILS NOT USUALLY SHOWN OR SPECIFIED, BUT NECESSARY FOR PROPER CONSTRUCTION OF ANY PORTIONS OF THE WORK SHALL BE INCLUDED AS IF THEY WERE INDICATED IN THE DRAWINGS.

29. INSTALL EQUIPMENT AND MATERIALS AS PER MANUFACTURERS' RECOMMENDATIONS. ANY DIFFICULTIES MUST BE REPORTED TO THE CONTRACTING OFFICER.

30. THE COMPLETE INSTALLATION OF BOILERS, FUEL BURNING EQUIPMENT , ELECTRICAL WORK AND ALL OTHER ITEMS OF WORK SHALL BE IN STRICT ACCORDANCE WITH ALL LAWS AND CODES, AND REGULATIONS.

31. THE HOT WATER SYSTEMS SHALL BE OPERATING ON 50/50 POLYPROPYLENE GLYCOL/WATER. ALL EQUIPMENT PERFORMANCE SHALL BE BASED ON THIS.

32. ALL EQUIPMENT AND PIPING SHALL BE SEISMICALLY SUPPORTED AS PER SPECIFICATION REQUIREMENTS.

33. ALL DUCTWORK SHALL BE SEISMICALLY SUPPORTED AS PER SMACNA STANDARDS, AND AS SHOWN ON DRAWINGS, AND SPECIFICATIONS.

34. THE CONTRACTOR SHALL PROVIDE 50 MM FILL LINES IN THE HOT WATER PIPING SYSTEM AT SUITABLE LOCATIONS FOR INITIAL FILL AND START-UP OF THE SYSTEM.

35. THE CONTRACTOR SHALL COORDINATE BETWEEN VARIOUS DISCIPLINES FOR INTERFERENCES, GENERAL COMPLIANCE AND CONSTRUCTABILITY.

36. ALL EQUIPMENT INCLUDING FANS WITH MOTORS, HOSE REELS, AIR HANDLING UNITS ETC. SHALL HAVE ADEQUATE SEISMIC ANCHORING TO THE SUPPORTS. ADD DIAGONAL BRACINGS AS REQUIRED TO PREVENT EQUIPMENT SWAY. IN ADDITION, THE ANCHORAGE SHALL BE DESIGNED TO RESIST A HORIZONTAL LOAD EQUAL TO 20% OF THE EQUIPMENT WEIGHT.

37. ALL CONTROLS SHALL BE COMPATIBLE WITH THE EXISTING FORT DRUM TRANE TRACER SUMMIT DDC CONTROL SYSTEM.

38. IT IS THE INTENTION OF THESE DRAWINGS TO CALL FOR FINISHED WORK, TESTED AND READY FOR OPERATION. WHEREVER THE WORD "PROVIDE" IS USED, IT SHALL MEAN "FURNISH AND INSTALL COMPLETE AND READY FOR USE."

39. THE DRAWINGS ARE DIAGRAMMATIC AND DO NOT NECESSARILY SHOW EVERY COMPONENT AND/OR ACCESSORY REQUIRED FOR A COMPLETE INSATALLATION. THE CONTRACTOR SHALL PROVIDE ALL ITEMS NECESSARY FOR A PROPERLY WORKING SYSTEM IN COMPLIANCE WITH ACCEPTED INDUSTRY STANDARDS AND MANUFACTURER'S RECOMMENDATIONS.

40. WHERE THE WORK OF VARIOUS TRADES WILL BE INSTALLED IN CLOSE PROXIMITY TO ONE ANOTHER OR WHERE THERE IS EVIDENCE THAT THE WORK OF ONE TRADE WILL INTERFERE WITH WORK OF OTHER TRADES, THE CONTRACTOR SHALL ASSIST IN WORKING OUT SPACE CONDITIONS TO MAKE A SATISFACTORY ADJUSTMENT. IF THE CONTRACTOR ALLOWS ONE TRADE TO INSTALL HIS WORK BEFORE COORDINATING WITH WORK OF OTHER TRADES, THE CONTRACTOR SHALL MAKE NECESSARY CHANGES TO CORRECT THE CONDITIONS IN SUCH A MANNER ACCEPTABLE TO THE ARCHITECT AND THE ENGINEER AND BEAR THE COST OF SUCH CORRECTIONS. ALL EQUIPMENT PERFORMANCE SHALL BE BASED ON THIS.

41 THE CONTRACTOR SHALL LOCATE ALL EQUIPMENT WHICH MUST BE SERVICED, OPERATED OR MAINTAINED IN FULLY ACCESSIBLE POSITION. IF REQUIRED FOR ACCESSIBILITY FURNISH ACCESS DOORS FOR THIS PURPOSE. MINOR DEVIATIONS FROM DRAWINGS MAY BE MADE TO ALLOW FOR BETTER ACCESSIBILITY AND ANY CHANGE FOR THAT PURPOSE IS ACCEPTABLE.

42. TURNING VANES SHALL BE PROVIDED IN ALL 90 DEGREE ELBOWS, LOW PRESSURE DUCTWORK WHICH IS 790 MM OR GREATER IN WIDTH SHALL BE PROVIDED WITH DOUBLE THICKNESS TURNING VANES. FOR DUCTWORK BETWEEN 325 MM AND 750 MM IN WIDTH, TURNING VANES MAY BE SINGLE THICKNESS. DUCTWORK WHICH IS 300 MM OR LESS IN WIDTH SHALL BE PROVIDED WITH RADIUS ELBOWS IN LIEU OF MITERED ELBOWS WITH TURNING VANES.

43. ALL DUCTWORK SHALL CONNECT TO EQUIPMENT WITH FLEXIBLE CONNECTIONS.

44. ANY DUCTWORK PENETRATING FIRE RATED ASSEMBLIES SHALL BE IN ACCORDANCE WITH MECHANICAL CODE, SECTION "FIRE DAMPERS." ALL FIRE DAMPERS SHALL BE UL LABELED, CLASS "B".

45. CONTRACTOR IS PROHIBITED FROM USING SOLDER, PIPING COMPONENT OR EQUIPMENT WHICH MAY CONTAMINATE THE WATER SUPPLY WITH LEAD.

46. CONTRACTOR SHALL COORDINATE THE FRAME TYPE AND LOCATION OF ALL AIR DIFFUSERS, GRILLES, ETC. WITH ARCHITECTURAL FEATURES, CEILING GRID AND LIGHTING FIXTURES TO ENSURE A SYMMETRIC AND/OR INTEGRAL PATTERN OF DESIGN AND CONSTRUCTION . REFER TO ARCHITECTURAL REFLECTED CEILING PLAN FOR PROPER LOCATION OF DEVICES.

47. ALL TEMPERATURE SENSORS SHALL BE INSTALLED 1200 MM AFF UNLESS OTHERWISE NOTED. TEMPERATURE SENSORS LOCATED ON PERIMETER WALLS/COLUMNS SHALL BE PROVIDED WITH INSULATED SUB-BASES.

48. CONTRACTOR SHALL FURNISH AND INSTALL TEMPERATURE SENSORS IN LOCATIONS INDICATED ON THE DRAWINGS. TEMPERATURE SENSORS SHALL NOT BE LOCATED ABOVE DIMMER SWITCHES OR OTHER HEAT-PRODUCING ELECTRICAL DEVICES. THERMOSTATS AND TEMPERATURE SENSORS/TRANSMITTERS SHALL BE ALIGNED WITH TOP EDGE OF ADJACENT LIGHT SWITCH(ES) AND LOCATED IN CLOSE PROXIMITY TO DOOR JAMB UNLESS OTHERWISE INDICATED ON PLANS.

49. CONTRACTOR SHALL COORDINATE THE LOCATION OF ALL AIR TERMINALS TO ENSURE THAT ALL REQUIRED SERVICE AREAS-BELOW AND AROUND AIR TERMINALS AND BETWEEN CEILING AND UNDERSIDE OF SLAB-ARE FREE FROM PARTITION FRAMINF, PIPING, CONDUIT OR OTHER IMPEDIMENTS. WHERE PARTITION FRAMING MUST BE LOCATED WITHIN AIR TERMINAL ELECTRICAL SERVICE AREAS, CONTRACTOR SHALL FRAME FROM TOP OF CEILING TO UNDERSIDE OF BUILDING STRUCTURE.

US Army Corps of Engineers
New York District

U.S. ARMY ENGINEER DISTRICT
CORPS OF ENGINEERS
NEW YORK, NEW YORK

FORCE MODERNIZATION EDUCATION /TRANSITIONAL FACILITY
PN 57708
FORT DRUM, NEW YORK

GENERAL NOTES

Sheet reference number:
M-002

Submitted by: e3endem3 Plot Date: 08-AUG-2005 12:49
S:øfileroomømilitaryøFort DrumøForceMODøMechanicalø100% SubmittaløForceMOD57708_M-002xxx.dgn

NOTE:
ALL MECHANICAL EQUIPMENT, DUCTS, HOSEREELS AND ASSOCIATED FIXTURES AND SUPPORTS SHALL BE INSTALLED AT A MINIMUM HEIGHT ABOVE FINISHED FLOOR OF 3658 mm

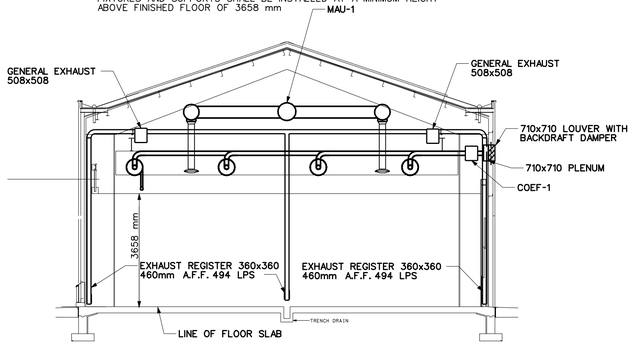

SECTION A-A
NTS

NOTES
1. ALL MECHANICAL SYSTEMS AND COMPONENTS INSTALLED IN THE VEHICLE PROCESSING AREA AND WAREHOUSE AREA SHALL BE INSTALLED AT A MIN. OF 3660MM (12'-0") A.F.F. WITH EXCEPTIONS AS INDICATED.
2. ALL MECHANICAL SYSTEMS AND COMPONENTS INSTALLED IN BAY NO.1 OF THE VEHICLE PROCESSING AREA SHALL BE INSTALLED TO CLEAR THE BRIDGE CRANE AND ASSOCIATED COMPONENTS AND SUPPORTING STRUCTURES INSTALLED IN THIS BAY.
3. CARBON MONOXIDE DETECTOR SHALL BE INTERLOCKED WITH OVERHEAD DOORS OH-1 AND OH-3.

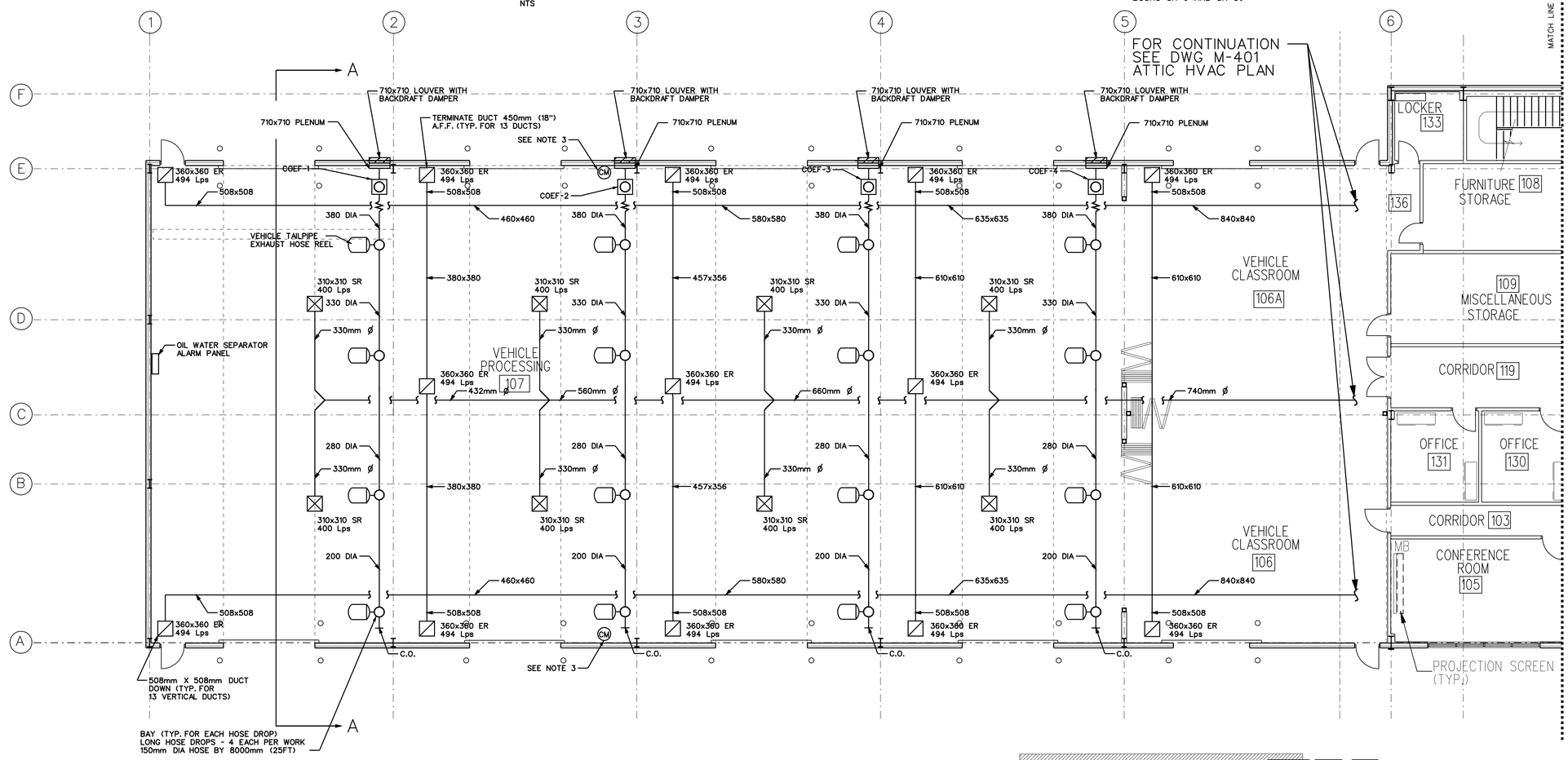

FLOOR PLAN - VEHICLE PROCESSING - WAREHOUSE
VEHICLE TAILPIPE EXHAUST SYSTEM

SCALE: 1:100
0 2000 4000 10000

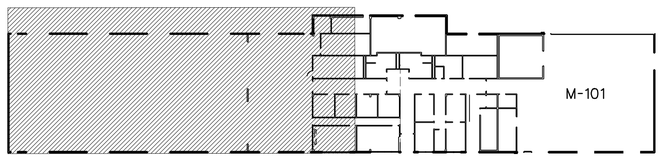

KEY PLAN

EXCEPT AS NOTED

US Army Corps of Engineers
New York District

Mark	Description	Date	Appr.

U.S. ARMY ENGINEER DISTRICT
CORPS OF ENGINEERS
NEW YORK, NEW YORK

Designed by: | Date: | Size: 24x36
Dwn by: | Ckd by: | Solicitation no.:
Reviewed by: | Contract no.:
Submitted by: | File size: 24.4KB-2006 10:04 | File name: M-100xxx.dgn | Sheet: 1/20000/1/00000
File name: S:\Tierroom\military\fort drum\FortDrumMOD\Mechanical\100% Submittal\ForceMOD57708_MH-100xxx.dgn

FORCE MODERNIZATION EDUCATION /TRANSITIONAL FACILITY
FORT DRUM, NEW YORK
PN 57708

VEHICLE PROC./ADMIN.WHSE VEHICLE TAILPIPE EXHAUST SYSTEM

Sheet reference number:
M-100

Submitted by: e3endem3
S:\Tierroom\military\Fort DrumMOD\Mechanical\100% Submittal\ForceMOD57708_MH-100xxx.dgn
Plot Date: 04-AUG-2005 12:04

NOTES
1. ALL MECHANICAL SYSTEMS AND COMPONENTS INSTALLED IN THE VEHICLE PROCESSING AREA AND WAREHOUSE AREA SHALL BE INSTALLED AT A MIN. OF 3660MM (12'-0") A.F.F. WITH EXCEPTIONS AS INDICATED.

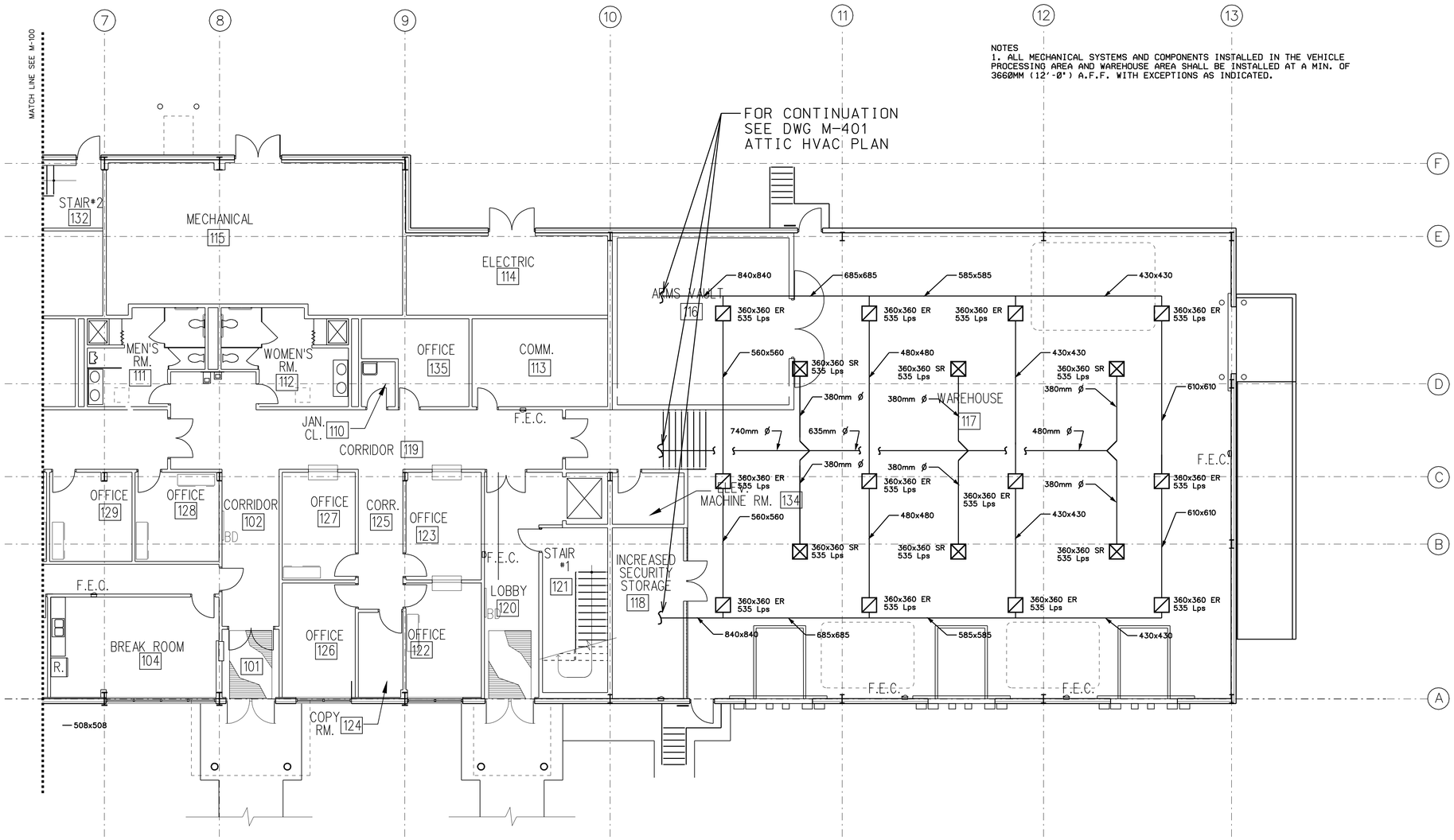

FLOOR PLAN - VEHICLE PROCESSING - WAREHOUSE
VEHICLE TAILPIPE EXHAUST SYSTEM

0 2000 4000 10000
SCALE: 1:100

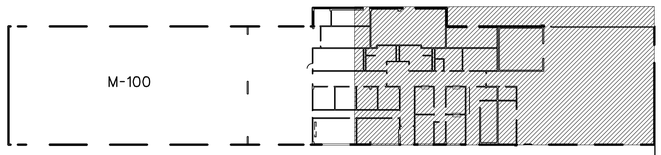

KEY PLAN

EXCEPT AS NOTED

US Army Corps of Engineers
New York District

Mark	Date	Description	Appr.

U.S. ARMY ENGINEER DISTRICT
CORPS OF ENGINEERS
NEW YORK, NEW YORK

Designed by: | Date: | Scale: AS NOTED
Dwn by: | Ckd by: | Solicitation no.:
Reviewed by: | Contract no.:
Submitted by: | Plot date: 04-AUG-2005 12:04 | Plot by: e3endem3 | Size: 120000X90000

File name: S:\fileroom\military\fort drum\models\drawings\mechanical\06_8\models\mod057708_MH-101xxx.dgn

FORCE MODERNIZATION EDUCATION (TRANSITIONAL FACILITY)
FORT DRUM, NEW YORK

VEHICLE PROC./ADMIN./WHSE HEATING & VENTING PLAN

PN 57708

Sheet reference number:
M-101

Submitted by: e3endem3 Plot Date: 04-AUG-2005 12:04
S:\fileroom\military\fort Drum\ForceMOD\Mechanical\100% Submittal\ForceMOD57708_MH-101xxx.dgn

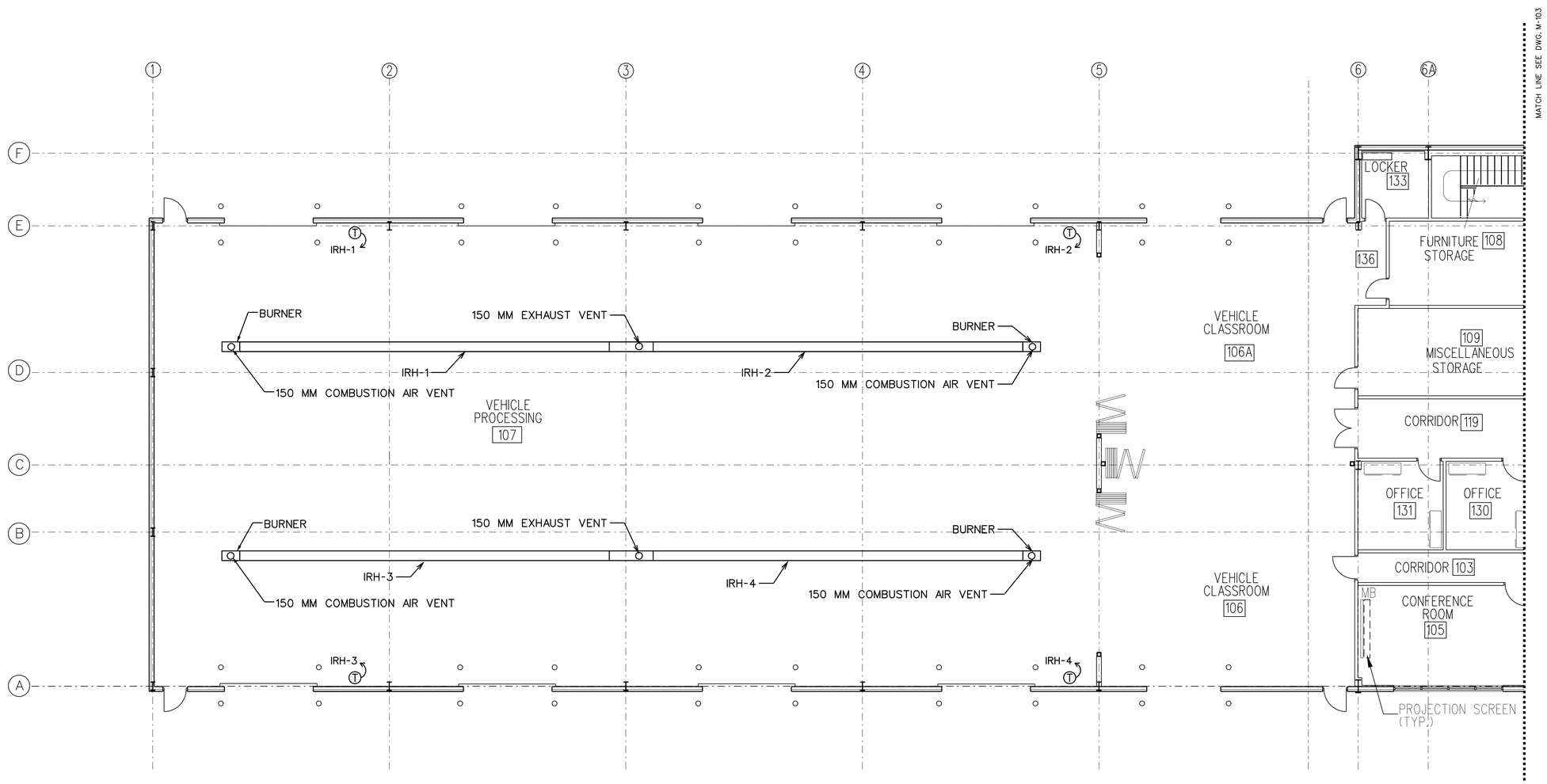

VEHICLE PROCESSING / ADMIN / WAREHOUSE BUILDING
VEHICLE PROCESSING AREA
INFRA-RED HEATING PLAN

NOTES

1. INFRA-RED HEATERS - CONTRACTOR SHALL POST SIGNS INDICATING THE MAXIMUM PERMISSIBLE STACKING HEIGHT TO MAINTAIN REQUIRED CLEARANCES FROM EACH INFRA-RED HEATER TO COMBUSTIBLES, IN ACCORDANCE WITH NFPA 54. CLEARANCE TO COMBUSTIBLES SHALL BE IN ACCORDANCE WITH MANUFACTURE'S RECOMMENDATIONS
2. MINIMUM MOUNTING HEIGHT FOR INFRA-RED HEATERS SHALL BE AS PER MANUFACTURE'S RECOMMENDATIONS.
3. INFRA-RED HEATER INSTALLATION SHALL COMPLY WITH ANSI/ NFPA 88A - LATEST EDITION (STANDARD FOR PARKING STRUCTURES), AND ANSI/ NFPA 88B LATEST EDITION (STANDARD FOR REPAIR GARAGES)
4. ALL MECHANICAL SYSTEMS AND COMPONENTS INSTALLED IN THE VEHICLE PROCESSING BAY AND WAREHOUSE AREA SHALL BE INSTALLED AT A MIN. OF 3660 MM A.F.F WITH EXCEPTIONS AS INDICATED.

SCALE: 1:100

0 2000 4000 10000

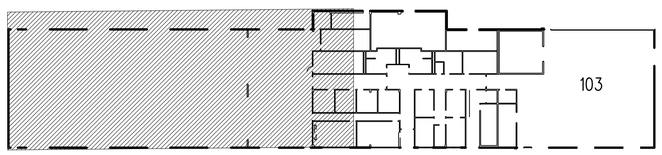

KEY PLAN

ALL DIMENSIONS ARE IN MILLIMETERS EXCEPT AS NOTED

US Army Corps of Engineers
New York District

U.S. ARMY ENGINEER DISTRICT
CORPS OF ENGINEERS
NEW YORK, NEW YORK

Designed by: | Date: | Rev. No.
Dwn by: | Ckd by: | Solicitation no.:
Reviewed by: | Contract no.:
Submitted by: | Plot date: 04-AUG-2005 12:04 | Plot by: e3endem3 | Scale: 1:100 | Contract no.: W912DR-04-C-0004

File name: S:\filerooms\military\fort drum\forceMOD\Mechanical\100% Submittal\forceMOD57708_MH-102xxx.dgn

FORCE MODERNIZATION EDUCATION /TRANSITIONAL FACILITY
FORT DRUM, NEW YORK
PN 57708

VEHICLE PROC./ADMIN./WHSE
VEHICLE PROCESSING AREA
INFRA-RED HEATING PLAN 1

Sheet reference number:
M–102

Submitted by: e3endem3
S:\filerooms\military\fort DrumØForceMODØMechanicalØ100% SubmittalØforceMOD57708_MH-102xxx.dgn
Plot Date: 04-AUG-2005 12:04

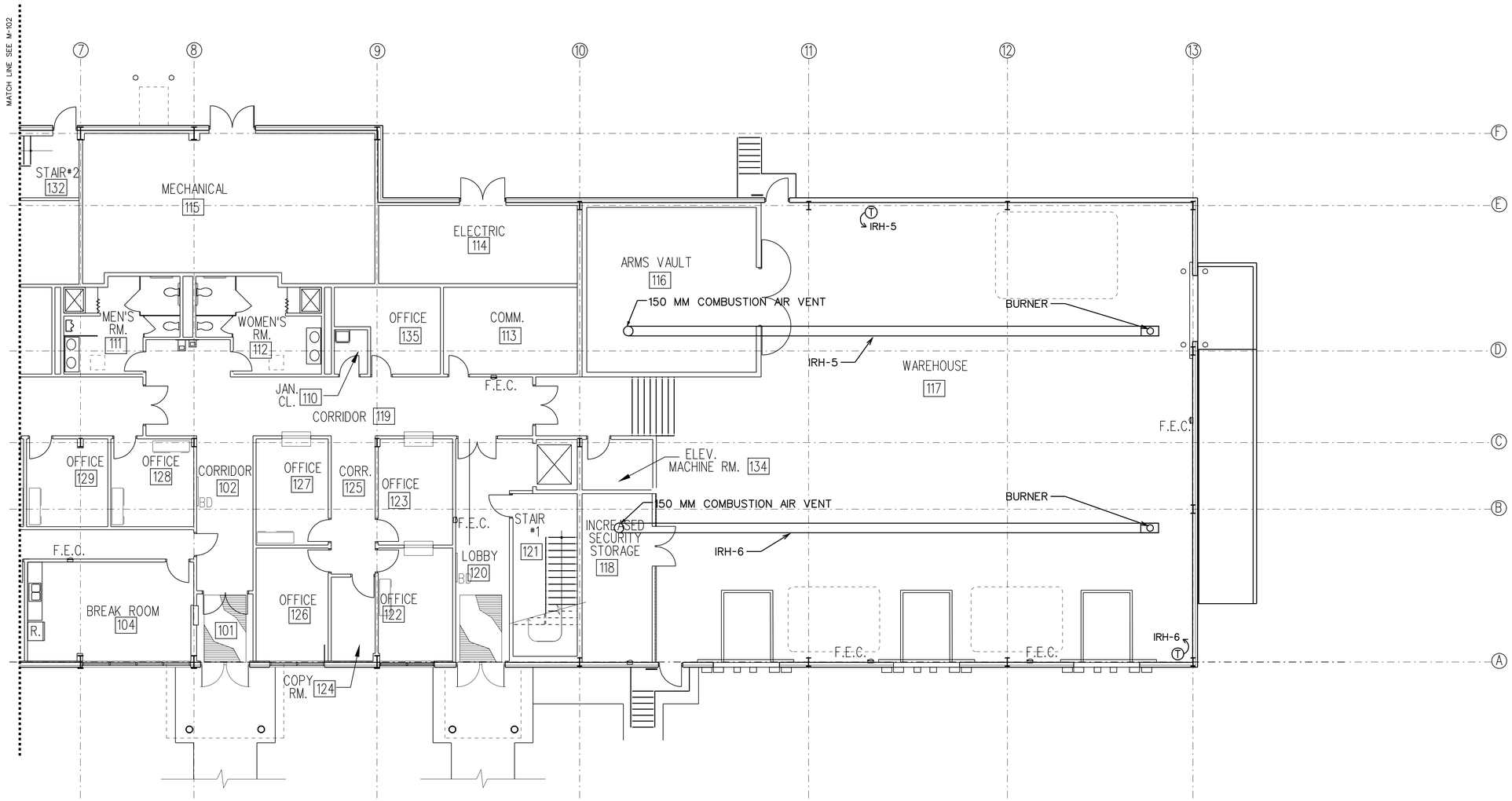

VEHICLE PROCESSING / ADMIN / WAREHOUSE BUILDING
WAREHOUSE AREA
INFRA-RED HEATING PLAN

NOTES

1. INFRA-RED HEATERS - CONTRACTOR SHALL POST SIGNS INDICATING THE MAXIMUM PERMISSIBLE STACKING HEIGHT TO MAINTAIN REQUIRED CLEARANCES FROM EACH INFRA-RED HEATER TO COMBUSTIBLES, IN ACCORDANCE WITH NFPA 54. CLEARANCE TO COMBUSTIBLES SHALL BE IN ACCORDANCE WITH MANUFACTURE'S RECOMMENDATIONS
2. MINIMUM MOUNTING HEIGHT FOR INFRA-RED HEATERS SHALL BE (AS PER ABOVE FACTORY'S RECOMMENDATIONS.
3. INFRA-RED HEATER INSTALLATION SHALL COMPLY WITH ANSI/ NFPA 88A - LATEST EDITION (STANDARD FOR PARKING STRUCTURES), AND ANSI/ NFPA 88B LATEST EDITION (STANDARD FOR REPAIR GARAGES)
4. ALL MECHANICAL SYSTEMS AND COMPONENTS INSTALLED IN THE VEHICLE PROCESSING BAY AND WAREHOUSE AREA SHALL BE INSTALLED AT A MIN. OF 3660 MM A.F.F WITH EXCEPTIONS AS INDICATED.

0 2000 4000 10000
SCALE: 1:100

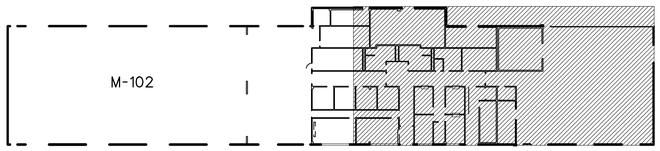

KEY PLAN

EXCEPT AS NOTED

US Army Corps of Engineers
New York District

U.S. ARMY ENGINEER DISTRICT
CORPS OF ENGINEERS
NEW YORK, NEW YORK

FORCE MODERNIZATION EDUCATION / TRANSITIONAL FACILITY
FORT DRUM, NEW YORK

VEHICLE PROC/ADMIN/WHSE
WAREHOUSE AREA
INFRA-RED HEATING PLAN 2

Sheet reference number:
M-103

Submitted by: e3endem3
S:\fileroom\military\Fort Drum\ForceMOD\Mechanical\100% Submittal\ForceMOD57708_MH-103xxx.dgn
Plot Date: 04-AUG-2005 12:05

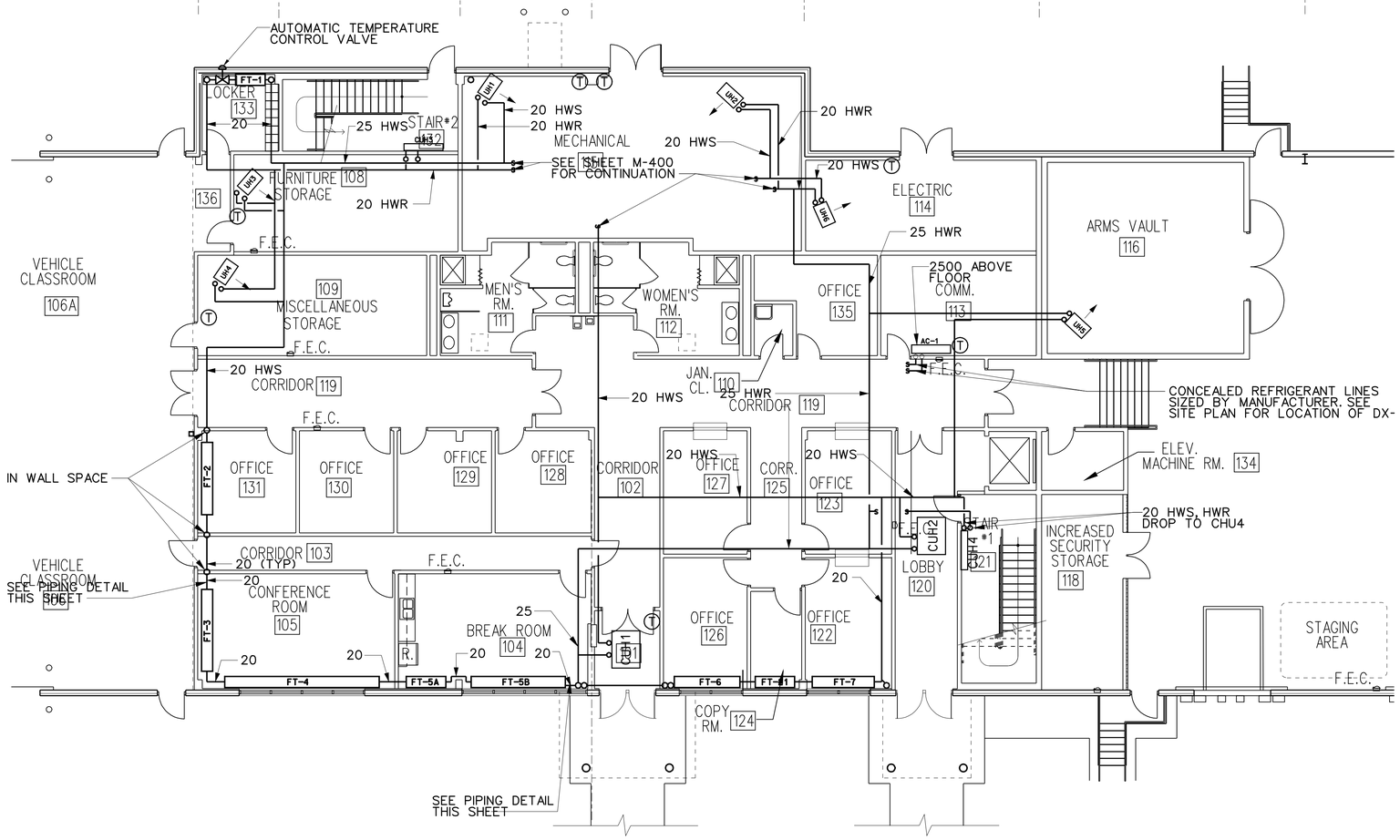

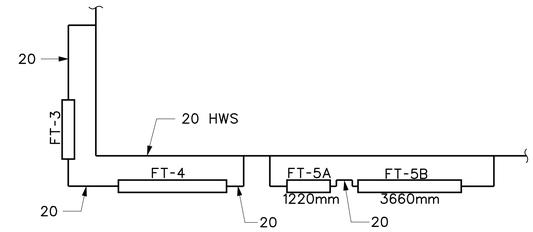

FINNED TUBE PIPING DETAIL

VEHICLE PROCESSING / ADMIN / WAREHOUSE BUILDING
ADMIN AREA FIRST FLOOR
HYDRONIC HEATING PIPING PLAN

NOTE:
ALL DIMENSIONS ARE IN MILLIMETERS EXCEPT AS NOTED.

0 2000 4000 10000
SCALE: 1:100

US Army Corps of Engineers
New York District

U.S. ARMY ENGINEER DISTRICT
CORPS OF ENGINEERS
NEW YORK, NEW YORK

Designed by: Date: Size: A1
Dwn by: Ckd by: Solicitation no.:
Reviewed by: Contract no.:
Submitted by: Plot date: 04-AUG-2005 12:07 Plot time: 12:07:00 Scale: 100:0100mm1:100000
File name: S:\filerooms\military\Fort Drum\Forced\Mechanical\100% Submittal\ForceMOD57708_MP-104xxx.dgn

FORCE MODERNIZATION PROJECT PN 57708
FIELD OFFICE / TRANSITIONAL FACILITY
FORT DRUM, NEW YORK

FIRST FLOOR
HYDRONIC HEATING
PIPING PLAN

Sheet reference number:
M–104

Plot Date: 04-AUG-2005 12:07
Submitted by: e3endem3
S:\filerooms\military\Fort Drum\ForceMOD\Mechanical\100% Submittal\ForceMOD57708_MP-104xxx.dgn

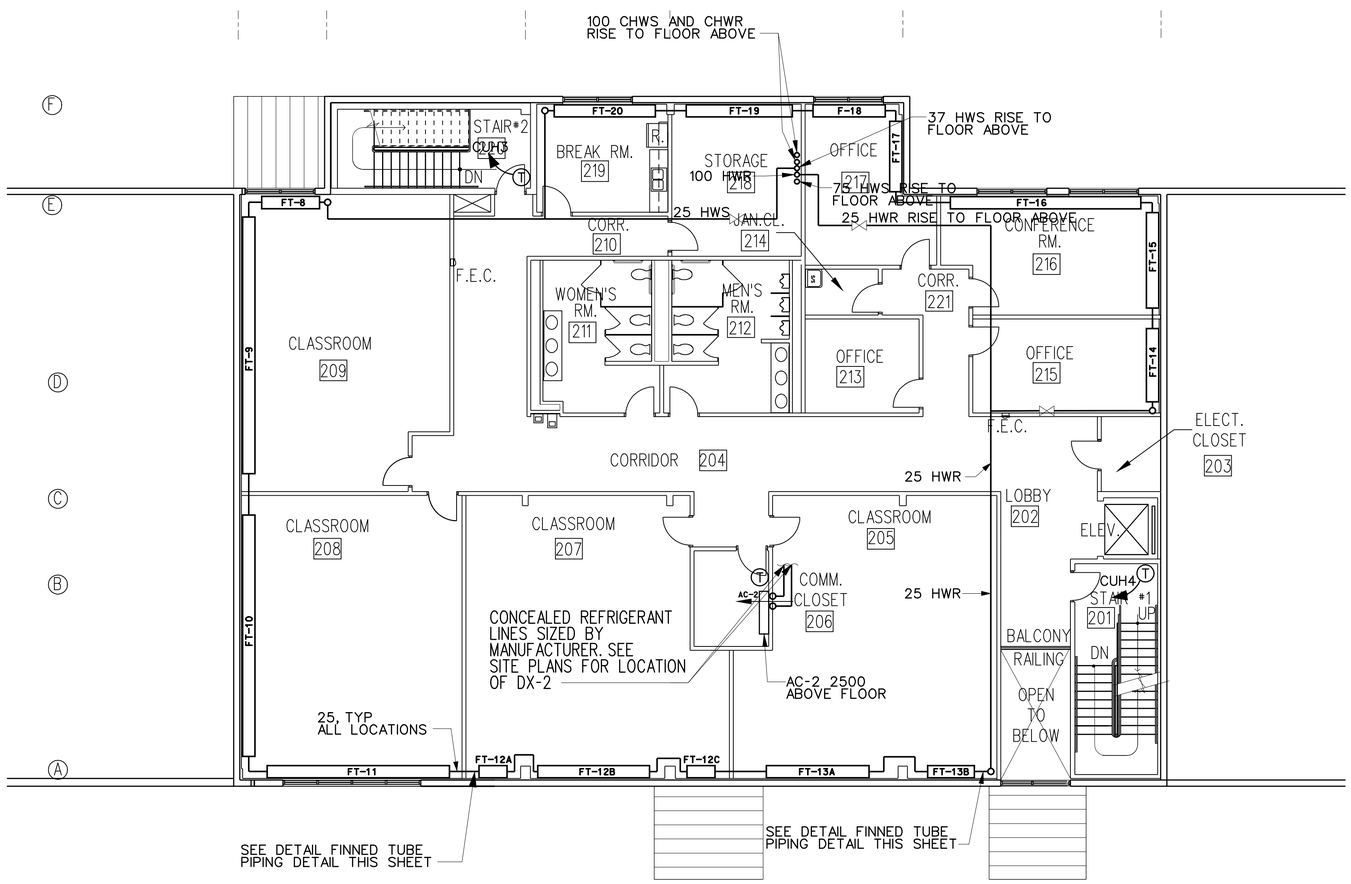

VEHICLE PROCESSING / ADMIN / WAREHOUSE BUILDING
ADMIN AREA SECOND FLOOR
HYDRONIC HEATING PIPING PLAN

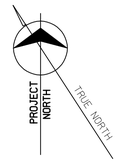

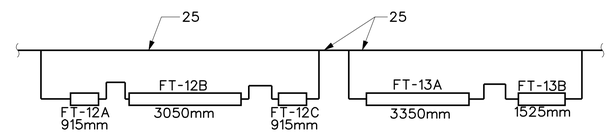

FINNED TUBE PIPING DETAIL

NOTE:
ALL DIMENSIONS ARE IN MILLIMETERS EXCEPT AS NOTED.

0 2000 4000 10000
SCALE: 1:100

US Army Corps of Engineers
New York District

U.S. ARMY ENGINEER DISTRICT
CORPS OF ENGINEERS
NEW YORK, NEW YORK

Designed by: Date:
Dwn by: Ckd by: Solicitation no.:
Reviewed by: Contract no.:
Submitted by: File name: 04-AUG-2005 10:07 File by: e3endem3 Sheet: 100.00000/100000
File name: S:\filer\military\Fort Drum\FortDrum\Mechanical\100% Submittal\ForceMOD\57708_MP-105xxx.dgn

FORCE MODERNIZATION EDUCATION /TRANSITIONAL FACILITY
FORT DRUM, NEW YORK
PN 57708

SECOND FLOOR HYDRONIC PIPING PLAN

Sheet reference number:
M–105

Submitted by: e3endem3 Plot Date: 04-AUG-2005 12:07
S:\filer\om\military\Fort Drum\ForceMOD\Mechanical\100% Submittal\ForceMOD57708_MP-105xxx.dgn

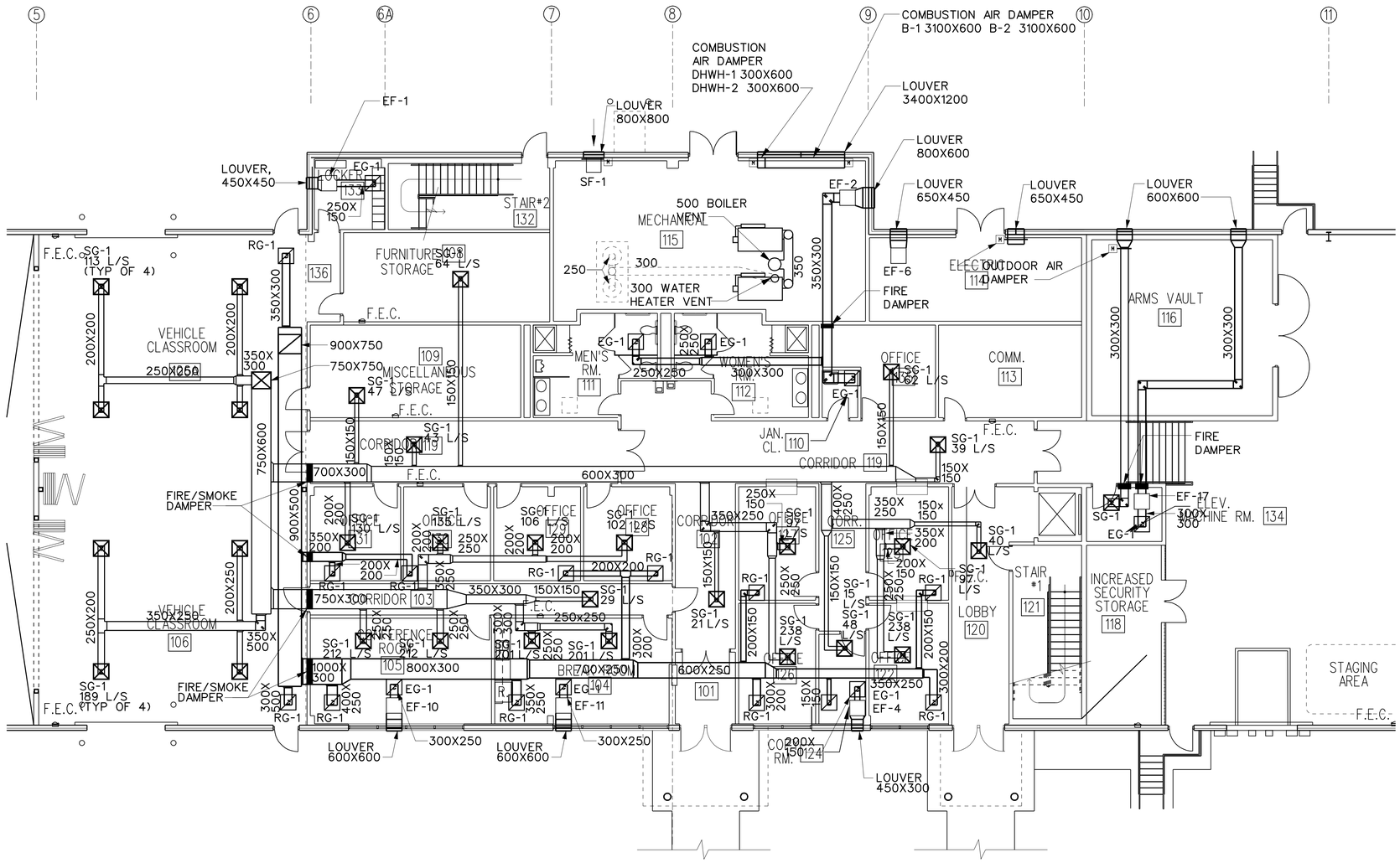

VEHICLE PROCESSING / ADMIN / WAREHOUSE BUILDING
FIRST FLOOR HVAC PLAN

NOTE:
ALL DIMENSIONS ARE IN MILLIMETERS EXCEPT AS NOTED.

0 2000 4000 10000
SCALE: 1:100

US Army Corps of Engineers
New York District

PROJECT NORTH
TRUE NORTH

U.S. ARMY ENGINEER DISTRICT
CORPS OF ENGINEERS
NEW YORK, NEW YORK

Designed by: Date: Size: 24x36
Dwn by: Ckd by: Solicitation no:
Reviewed by: Contract no:
Submitted by: Plot date: 04-AUG-2005 12:05 Plot scale: 1:1 Plot date: 00/00/0000 12:00:00
File name: S:\Barnum\military\Fort Drum\Force\DD\Mechanical\100% Submittal\ForceMOD577708_MH-106xxx.dgn

FORCE MODERNIZATION EDUCATION (TRANSITIONAL FACILITY)
FORT DRUM, NEW YORK
PN 57708

FIRST FLOOR HVAC PLAN

Sheet reference number:
M-106

Submitted by: e3endem3
S:\filer\om\military\Fort Drum\ForceMOD\Mechanical\100% Submittal\ForceMOD577708_MH-106xxx.dgn
Plot Date: 04-AUG-2005 12:05

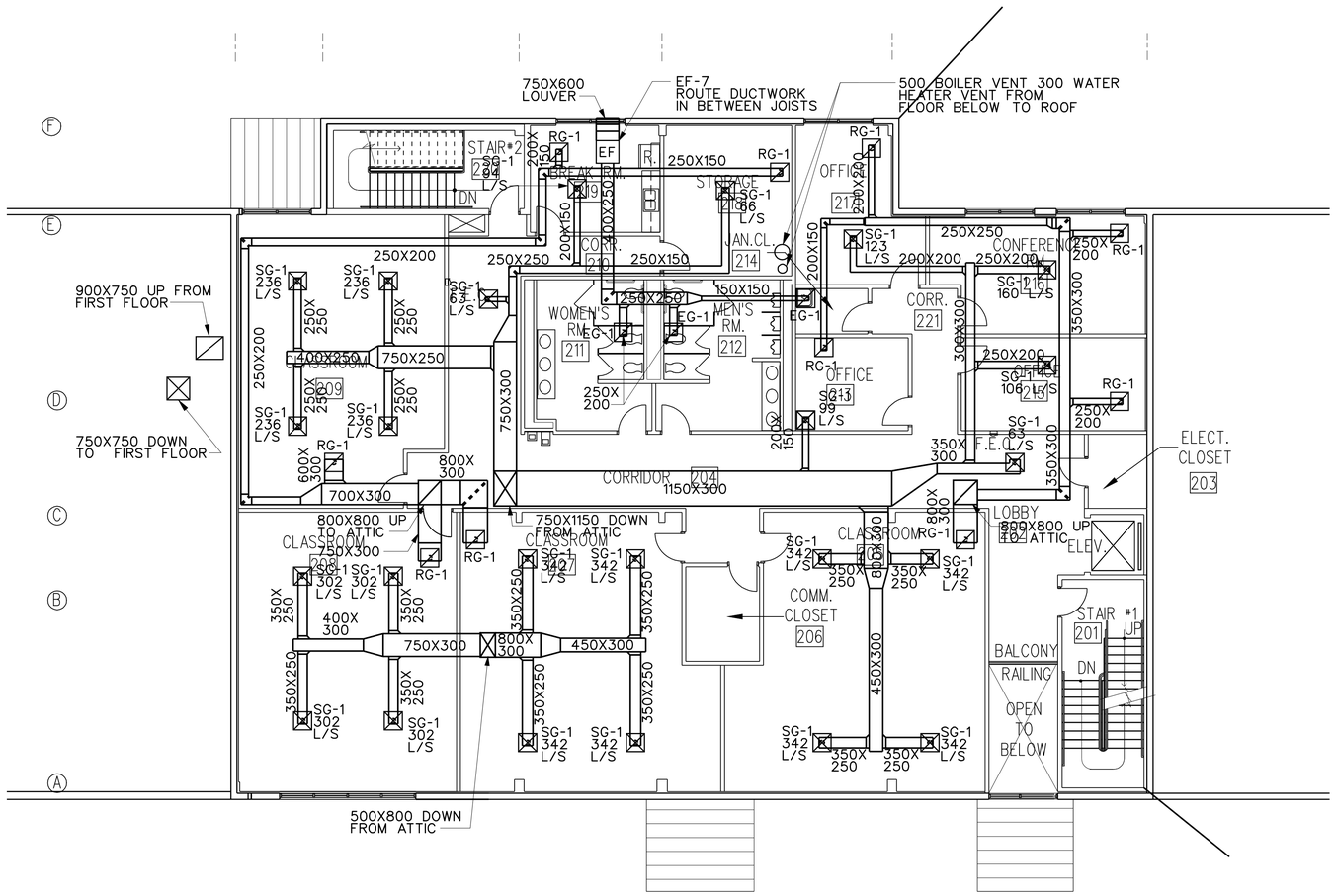

VEHICLE PROCESSING / ADMIN / WAREHOUSE BUILDING
SECOND FLOOR HVAC PLAN

NOTE:
ALL DIMENSIONS ARE IN MILLIMETERS EXCEPT AS NOTED.

0 2000 4000 10000
SCALE: 1:100

US Army Corps of Engineers
New York District

U.S. ARMY ENGINEER DISTRICT
CORPS OF ENGINEERS
NEW YORK, NEW YORK

PN 57708
FORCE MODERNIZATION EDUCATION /TRANSITIONAL FACILITY
FORT DRUM, NEW YORK

SECOND FLOOR HVAC PLAN

Sheet reference number:
M-107

Submitted by: e3endem3 Plot Date: 04-AUG-2005 12:05
S:\filerooms\military\Fort Drum\ForceMOD\Mechanical\100% Submittal\ForceMOD57708_MH-107xxx.dgn

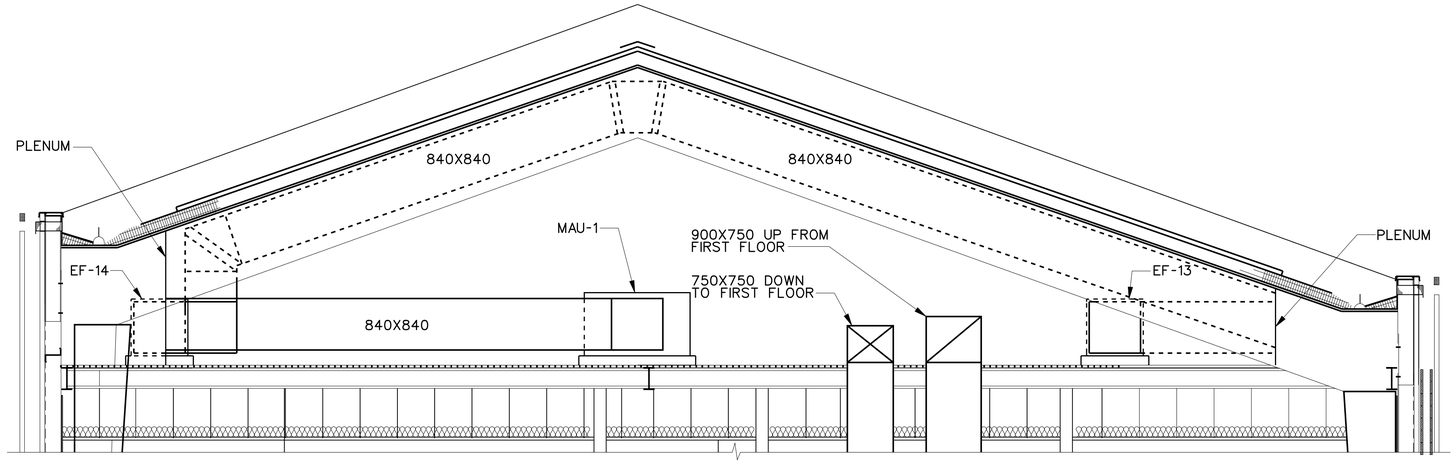

NOTE:
ALL STRUCTURAL BRACING SHALL NOT INTERFERE WITH DUCTWORK, EQUIPMENT PLACEMENT, AND EQUIPMENT ACCESS.

1 / M-401 ATTIC ELEVATION LOOKING WEST

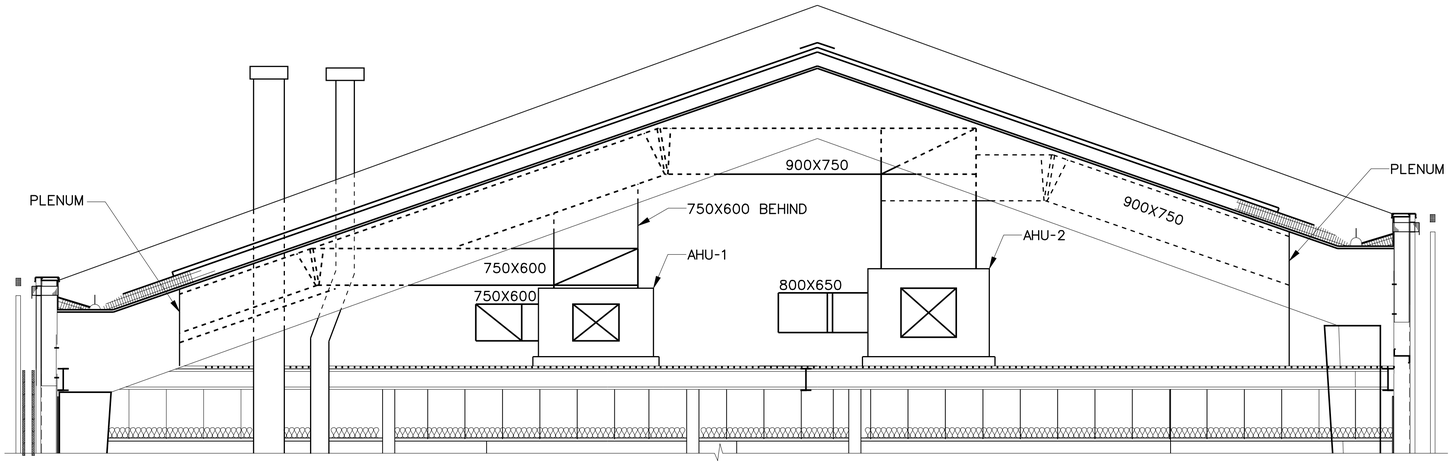

NOTE:
ALL STRUCTURAL BRACING SHALL NOT INTERFERE WITH DUCTWORK, EQUIPMENT PLACEMENT, AND EQUIPMENT ACCESS.

2 / M-401 ATTIC ELEVATION LOOKING EAST

NOTE:
ALL DIMENSIONS ARE IN MILLIMETERS EXCEPT AS NOTED.

0 1000 2000 50000
SCALE: 1:50

US Army Corps of Engineers
New York District

U.S. ARMY ENGINEER DISTRICT
CORPS OF ENGINEERS
NEW YORK, NEW YORK

PN 57708
FORCE MODERNIZATION EDUCATION /TRANSITIONAL FACILITY
FORT DRUM, NEW YORK

HVAC SECTIONS

Sheet reference number:
M-300

Submitted by: e3endem3 Plot Date: 04-AUG-2005 12:05
S:\fileroom\military\Fort Drum\ForceMOD\Mechanical\100% Submittal\ForceMOD57708_MH-300xxx.dgn

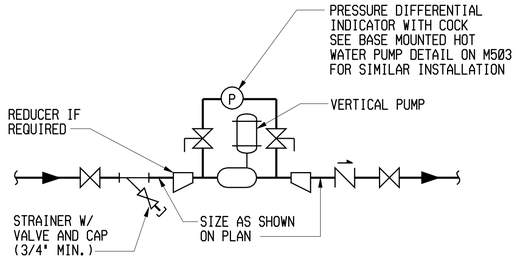

INLINE PUMP PIPING DETAIL

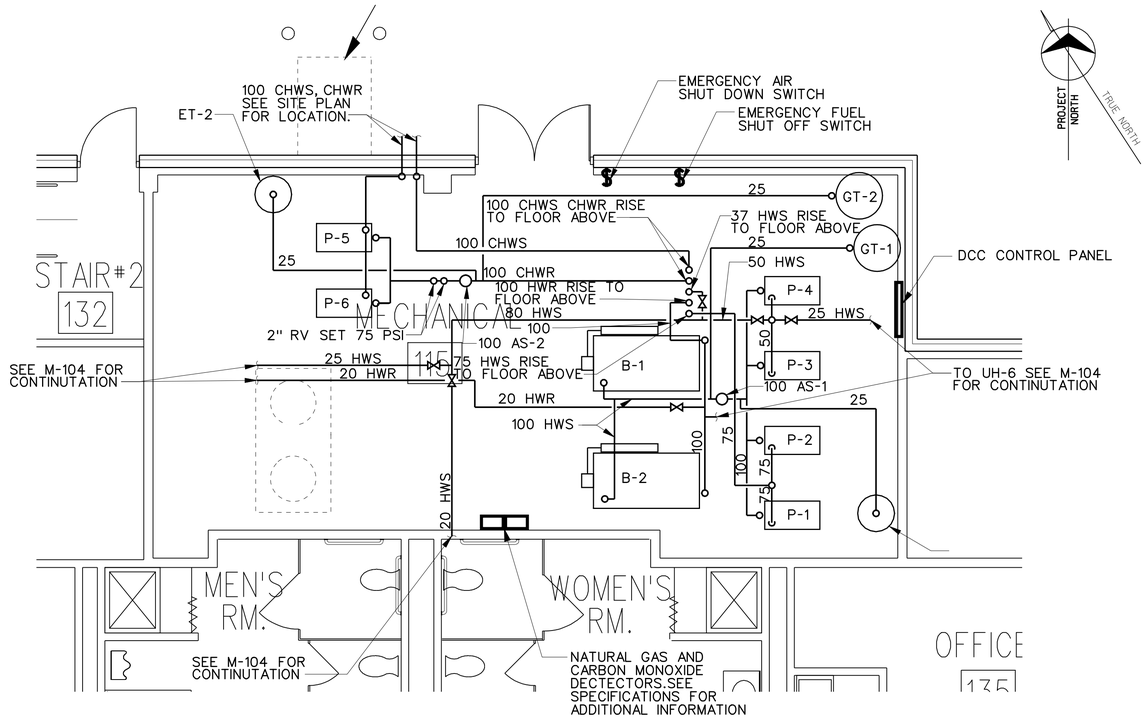

ENLARGED MECHANICAL ROOM PIPING PLAN

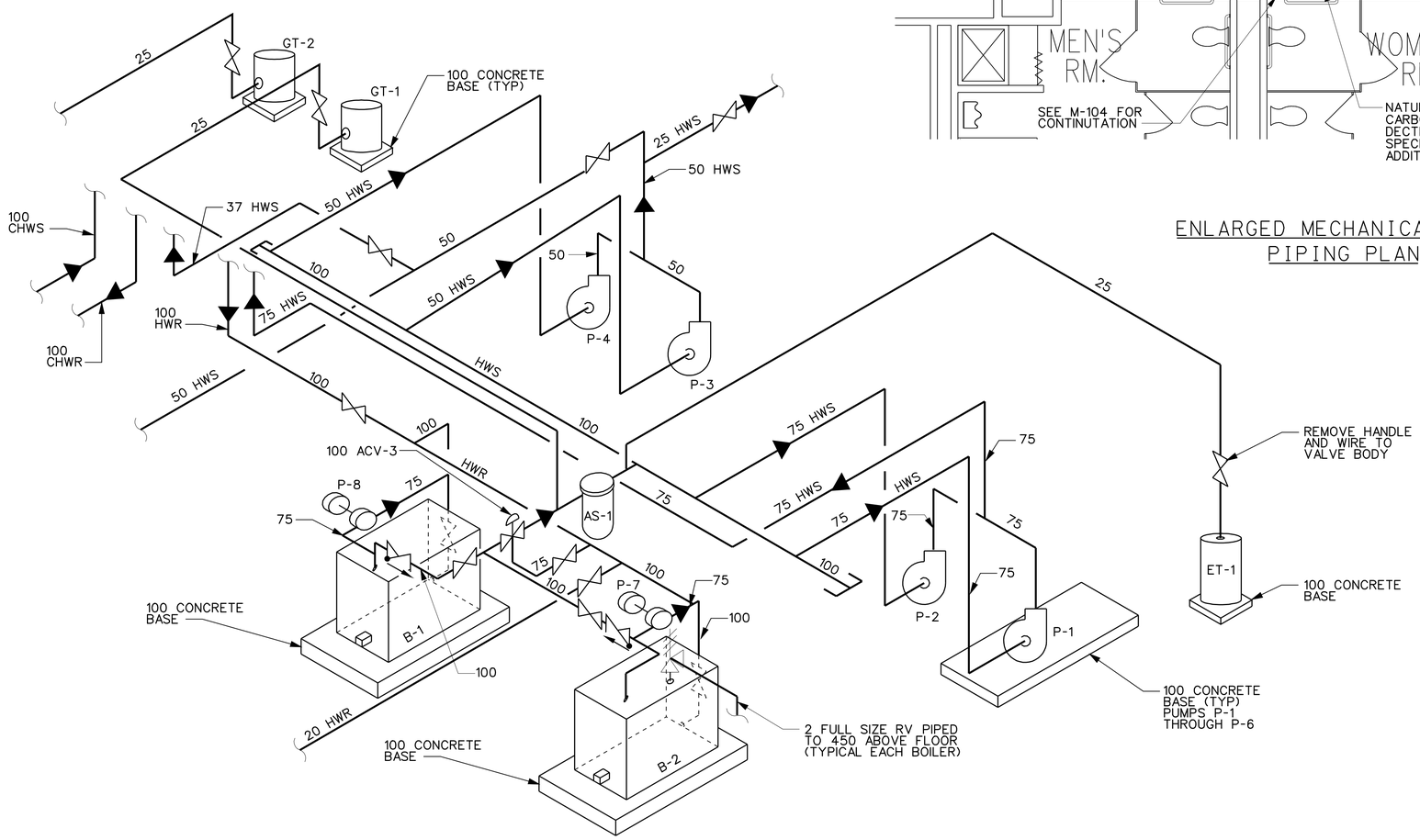

BOILER PIPING DIAGRAM

NO SCALE

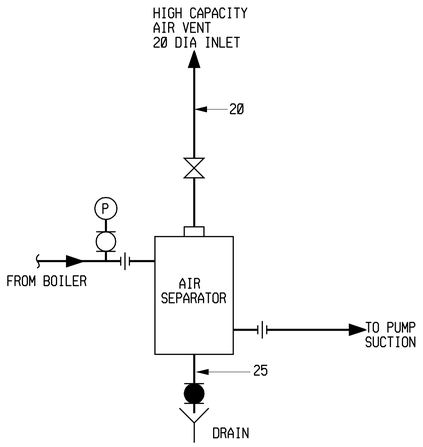

AIR SEPARATOR PIPING DETAIL

NOTE:
ALL DIMENSIONS ARE IN MILLIMETERS EXCEPT AS NOTED.

0 1000 2000 50000

SCALE: 1:50

US Army Corps of Engineers
New York District

Mark	Date	Description	Mark	Date	Description

Designed by: | Date: | Size: A1
Dwn by: | Ckd by: | Solicitation no.:
Reviewed by: | Contract no.:
Submitted by: | File name: 04-AUG-2005 12:07 | File type: MicroStation V8 | Scale: as shown | Size: 49.00000 x 31.00000

U.S. ARMY ENGINEER DISTRICT
CORPS OF ENGINEERS
NEW YORK, NEW YORK

File name: E:\Secure\military\Fort Drum\models\Mechanical\100% Submittal\ForceMOD57708_MP-400xxx.dgn

FORCE MODERNIZATION PH 57708
FY 2007/2008 /TRANSITIONAL FACILITY
FORT DRUM, NEW YORK

MECHANICAL ROOM ENLARGED PIPING PLAN

Sheet reference number:
M-400

Plot Date: 04-AUG-2005 12:07
Submitted by: e3endem3
S:\filer\oom\military\Fort DrumMODMechanical\100% Submittal\ForceMOD57708_MP-400xxx.dgn

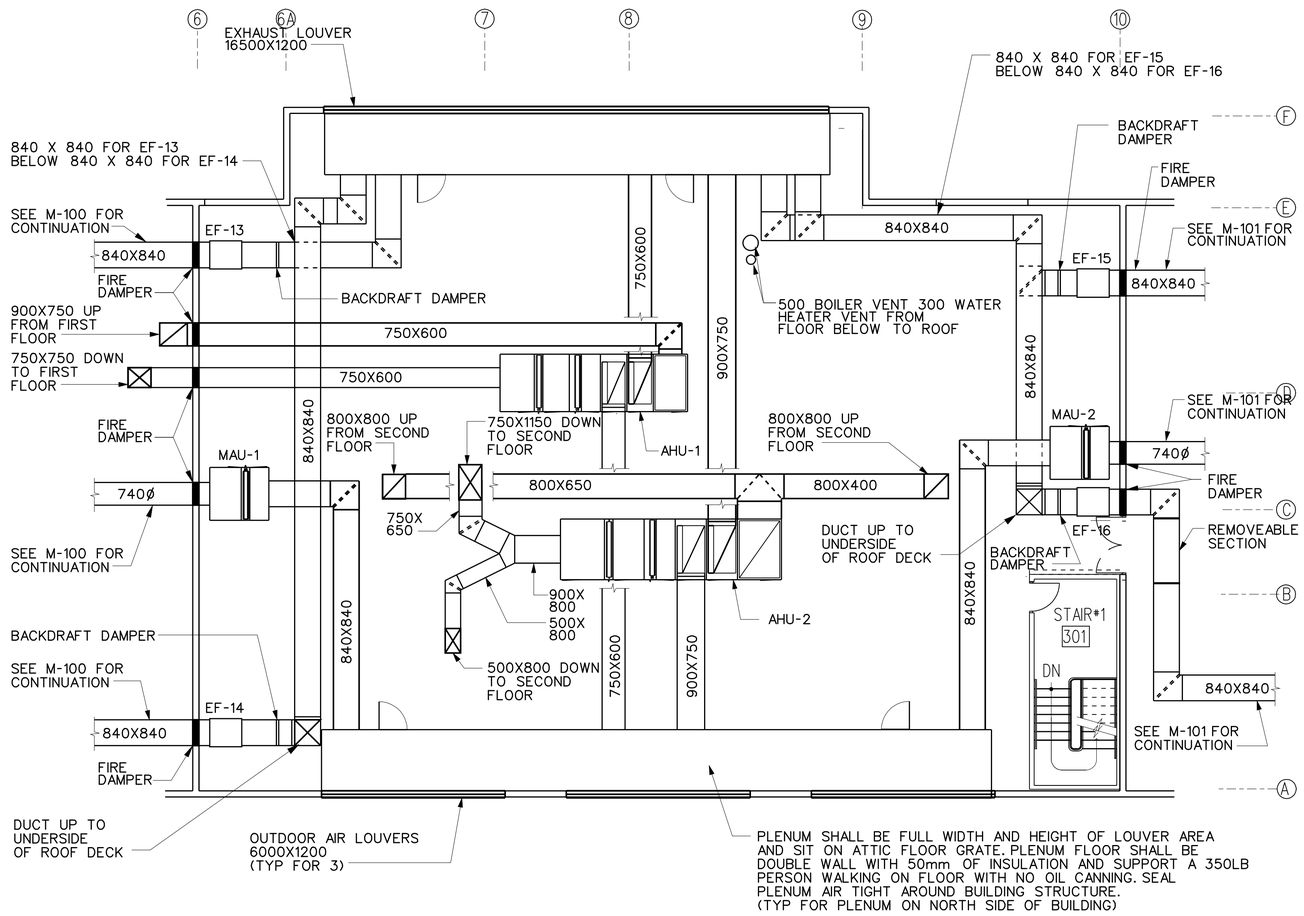

ATTIC HVAC PLAN

PROJECT NORTH
TRUE NORTH

0 2000 4000 10000
SCALE: 1:100

US Army Corps of Engineers
New York District

U.S. ARMY ENGINEER DISTRICT
CORPS OF ENGINEERS
NEW YORK, NEW YORK

Designed by:
Dwn by:
Ckd by:
Reviewed by:
Submitted by:
Date:
Solicitation no.:
Contract no.:
Plot date: 04-AUG-2005 12:05
Plot scale: 1:100
Size: 24
File name: S:\Mission\Military\Fort Drum\FortDrum\Mechanical\100% Submittal\FortDrumMechanical100%Submittal.dgn

FORCE MODERNIZATION PN 57708
EDUCATION TRANSITIONAL FACILITY
FORT DRUM, NEW YORK

ATTIC HVAC PLAN

Sheet reference number:
M–401

Submitted by: e3endem3
S:\fileroom\military\Fort DrumFortDrumMOD\MechanicalØ100% SubmittalØForceMOD57708_MH-401xxx.dgn
Plot Date: 04-AUG-2005 12:05

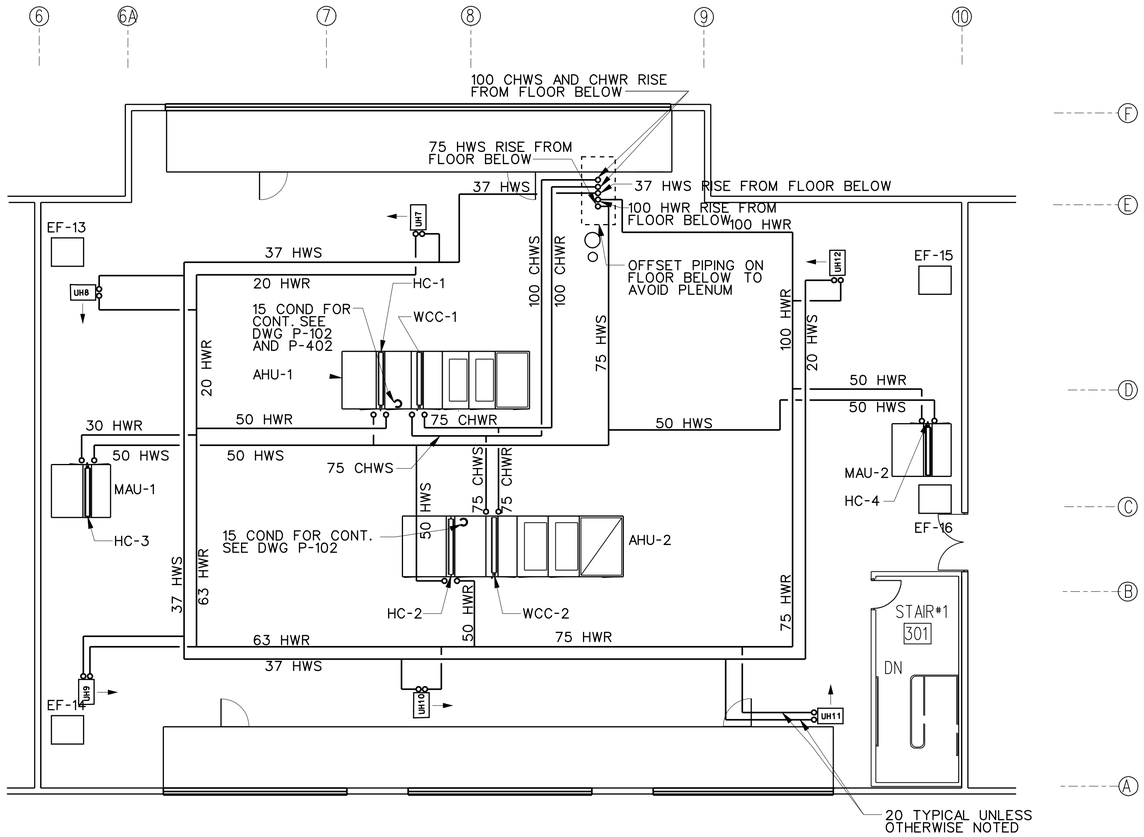

ATTIC PIPING PLAN

NOTE:
ALL DIMENSIONS ARE IN MILLIMETERS EXCEPT AS NOTED.

0 2000 4000 10000
SCALE: 1:100

PROJECT NORTH
TRUE NORTH

US Army Corps of Engineers
New York District

U.S. ARMY ENGINEER DISTRICT
CORPS OF ENGINEERS
NEW YORK, NEW YORK

Designed by:
Dwn by:
Ckd by:
Reviewed by:
Submitted by:
Date:
Solicitation no.:
Contract no.:
Plot date: 08-AUG-2005 10:38
Plot by: e3endfwb
Scale: 100:0000/0:0000
File name: S:\fileroom\military\fort drum\model\forcemod\mechanical\100% submittal\forcemod577708_mp-402xxx.dgn

FORCE MODERNIZATION PN 577708
EDUCATION TRANSITIONAL FACILITY
FORT DRUM, NEW YORK

ATTIC PIPING PLAN

Sheet reference number:
M–402

SUBMITTED BY: E3ENDFWB
S:\FILEROOM\MILITARY\FORT DRUM\FORCEMOD\MECHANICAL\100% SUBMITTAL\FORCEMOD577708_MP-402XXX.DGN
PLOT DATE: 08-AUG-2005 10:38

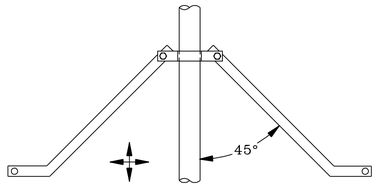

FIGURE "A"

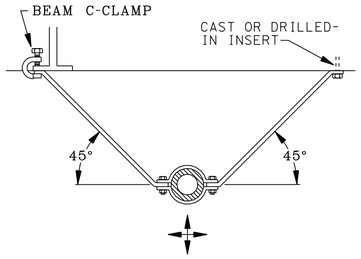

FIGURE "D"

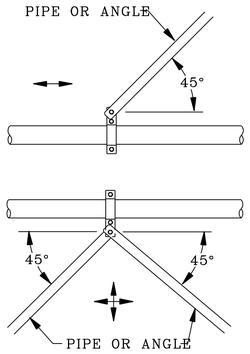

FIGURE "G"

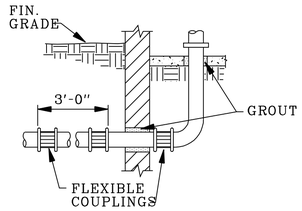

PIPE GROUTED IN WALL

FIGURE "J"

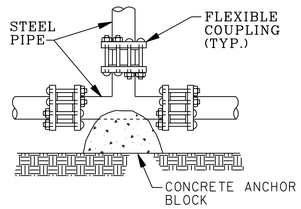

UNDERGROUND PIPING RISER-TEES

FIGURE "M"

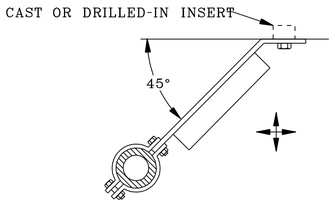

FIGURE "B"

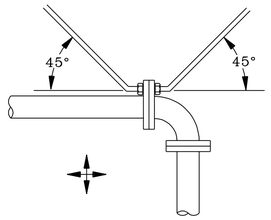

FIGURE "E"

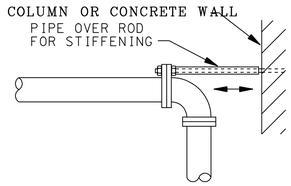

FIGURE "H"

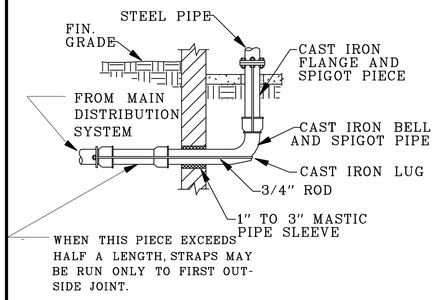

UNGROUTED PIPE

FIGURE "K"

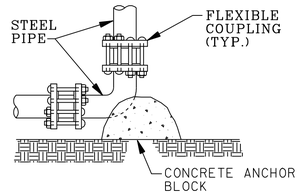

UNDERGROUND PIPING RISER-ELBOWS

FIGURE "N"

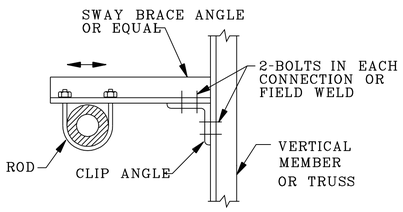

FIGURE "C"

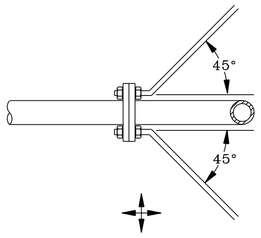

FIGURE "F"

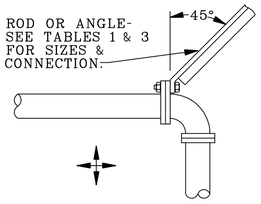

FIGURE "I"

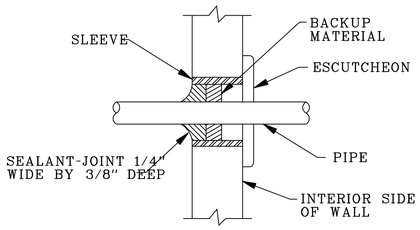

PIPE SLEEVE F/BARE PIPE THRU WALL-ABOVE GRADE

FIGURE "L"

NOTES:
RODS OR ANGLES MAY BE USED FOR SUPPORTS INTERCHANGEABLY. SEE MAXIMUM BRACING LENGTHS SHOWN IN TABLE 1 AND MINIMUM SIZES AND SPAN INTERVALS IN TABLE 3.

ARROWS INDICATE DIRECTION OF AVAILABLE FORCE RESISTANCE, TYPICAL.

SEISMIC PIPE SUPPORT DETAILS

NTS

US Army Corps of Engineers
New York District

Mark	Description	Date	Appr.

U.S. ARMY ENGINEER DISTRICT
CORPS OF ENGINEERS
NEW YORK, NEW YORK

Designed by: | Date: | Size: 24x36 | Scale: NTS
Dwn by: | Ckd by: | Solicitation no.:
Reviewed by: | Contract no.:
Submitted by: | File name: 04-AUG-2005 12:04 | Plot date: 04-AUG-2005 | Plot by: | Date: 1/2000/1/00000
File name: S:\Mission Valley\Fort Drum\FORCE\Mechanical\100% Submittal\ForceMOD57708_M-500xxx.dgn

FORCE MODERNIZATION EDUCATION (TRANSITIONAL FACILITY
FOR DRUM, NEW YORK

PN 57708

SEISMIC DETAILS – 1

Sheet reference number:
M–500

Submitted by: e3endem3
S:\fileroom\military\Fort Drum\ForceMOD\Mechanical\100% Submittal\ForceMOD57708_M-500xxx.dgn
Plot Date: 04-AUG-2005 12:04

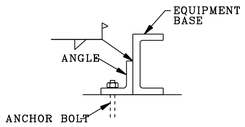

FIGURE "O"

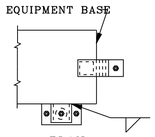

PLAN

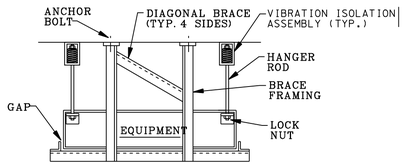

SUSPENDED EQUIPMENT W/ VIBRATION MOUNT

FIGURE "T"

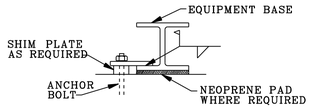

FIGURE "P"

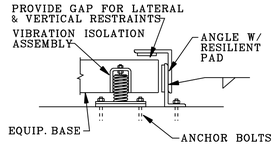

ELEVATION

FIGURE "R"

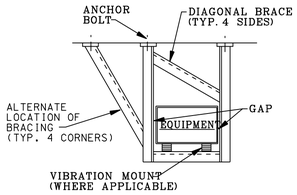

FIGURE "Q"

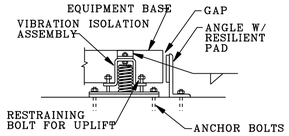

FIGURE "S"

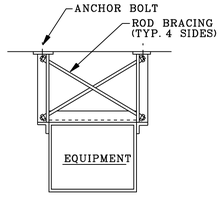

SUSPENDED EQUIPMENT

FIGURE "U"

NOTES:
1. CLEARANCES AT SIDES FOR SPRING MOUNTED EQUIPMENT AS IN FIG. "R" & "S", SHALL BE IN ACCORDANCE WITH MFR'S. RECOMMENDATIONS.
2. SEE MAXIMUM BRACING LENGTHS, TABLE 1, FOR BRACE SIZES.
3. IF EQUIPMENT IS MOUNTED ON NEOPRENE PADS, ANCHOR BOLTS SHALL BE ISOLATED FROM EQUIPMENT BY A NEOPRENE SLEEVE AND WASHER.
4. PROVIDE A MINIMUM OF (4) 1/2" ANCHOR BOLTS FOR EQUIPMENT UP TO 100,000 LBS. AND (4) 3/4" BOLTS FOR EQUIPMENT 100,000 LBS. OR GREATER.
ADD (1) ADDITIONAL 3/4" BOLT FOR EACH ADDITIONAL 25,000 LBS.

EQUIPMENT SEISMIC SUPPORTS

NTS

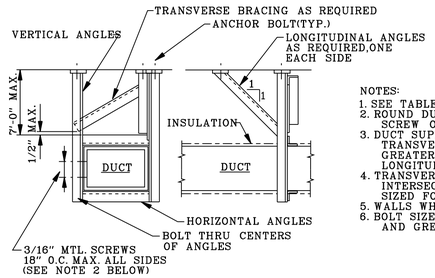

NOTES:
1. SEE TABLE 2 FOR ANGLE SIZES.
2. ROUND DUCT SUPPORTS SHALL BE SIMILAR, EXCEPT (1) 3/16" METAL SCREW ON EACH OF THE FOUR QUADRANTS.
3. DUCT SUPPORT INTERVALS SHALL BE AS FOLLOWS:
TRANSVERSE SWAY BRACING: MAX. EVERY 30' O.C. EACH HORIZ. TURN GREATER THAN 45\, AND AT END OF EACH RUN.
LONGITUDINAL SWAY BRACING: MAX. EVERY 60' O.C.
4. TRANSVERSE BRACING MAY SERVE AS HORZ. BRACING OF PERPENDICULAR INTERSECTING DUCTS IF INSTALLED WITHIN 4' OF INTERSECTION AND SIZED FOR LARGER DUCT.
5. WALLS WHICH DUCTS PENETRATE MAY SERVE AS TRANSVERSE BRACING.
6. BOLT SIZE SHALL BE 1/4" UP TO 54" DUCT SIZE AND 3/8" FOR 54 " AND GREATER DUCT SIZE.

DUCT SEISMIC SUPPORTS

NTS

TABLE 3

PIPING SUPPORT SIZES & SPAN INTERVALS

PIPE I.D. INCHES (SEE NOTES)	BOLT TO ANGLE OR ROD	TRANSVERSE, LONGITUDINAL, AND VERTICAL ANGLES	ROD DIA.	MAXIMUM SPAN INTERVALS BETWEEN TRANSVERSE SWAY BRACING (FT)	
				STEEL PIPING	ALL OTHER(5) PIPING MAT'L.
1	3/8"	1-1/2" X 1-1/2" X 3/16"	3/8"	27.50	13.75
1-1/4	3/8"	1-1/2" X 1-1/2" X 3/16"	3/8"	27.50	13.75
1-1/2	3/8"	1-1/2" X 1-1/2" X 3/16"	3/8"	31.25	15.00
2	3/8"	1-1/2" X 1-1/2" X 3/16"	1/2"	36.25	17.50
2-1/2	3/8"	2" X 2" X 5/16"	1/2"	40.00	18.75
3	3/8"	2" X 2" X 5/16"	1/2"	42.50	21.25
3-1/2	3/8"	2" X 2" X 5/16"	1/2"	45.00	22.50
4	1/2"	2" X 2" X 5/16"	5/8"	48.75	23.75
5	1/2"	2" X 2" X 5/16"	5/8"	51.25	25.00
6	1/2"	2" X 2" X 5/16"	3/4"	56.25	27.50
8	5/8"	2-1/2" X 2-1/2" X 1/2"	3/4"	61.25	32.50
10	7/8"	2-1/2" X 2-1/2" X 1/2"	-	67.50	35.00
12	1"	3" X 3" X 3/4"	-	72.50	38.75

NOTES:
1. MAXIMUM SPAN INTERVALS ARE BASED ON PIPE WEIGHT WITH NO ATTACHMENTS. IF THE WEIGHT OF THE ATTACHMENTS ON A SPAN IS GREATER THAN 10% OF THE PIPE SPAN WEIGHT, ATTACHMENTS SHALL BE LATERALLY BRACED SEPARATELY.
2. FLEXIBLE CONNECTORS SHALL BE USED AS REQUIRED.
3. LONGITUDINAL BRACE INTERVAL SHALL BE MAXIMUM 40 FT.
4. ALL TUBING SHALL BE BRACED AT 4 FT. INTERVALS.
5. CAST IRON SOIL PIPE SHALL BE BRACED AT 10 FT. INTERVALS.
6. SWAY BRACE REFERS TO TRANSVERSE OR LONGITUDINAL SUPPORTS.

TABLE 2

DUCT SUPPORT ANGLE SIZES

DUCT SIZE- DIA. OR LONGER SIDE (IN)	MIN. ANGLE SIZE
LESS THAN 42	2" x 2" x 1/8"
42 TO 60	2-1/2" x 2-1/2" x 3/16"
OVER 60	3" x 3" x 3/16"

TABLE 1

MAXIMUM BRACING LENGTHS

ITEM(1)	MAXIMUM LENGTH,L(2)
∡ 1" X 1"	39"
∡ 1-1/4" X 1-1/4"	48"
∡ 1-1/2" X 1-1/2"	58"
∡ 1-3/4" X 1-3/4"	68"
∡ 2" X 2"	77"
∡ 2-1/2" X 2-1/2"	97"
∡ 3" X 3"	116"
∡ 3-1/2" X 3-1/2"	136"
3/8" ROD	19"
1/2" ROD	25"
5/8" ROD	31"
3/4" ROD	37"
7/8" ROD	43"

NOTES:
1. REFERS TO ANGLES WHERE THE MAXIMUM LENGTH IS RELATIVELY INDEPENDENT OF THICKNESS. i.e. MAX. LENGTH SHOWN FOR A 1" X 1" ANGLE IS GOOD FOR ANGLES 1/4" & 3/8" THICK, ETC.
2. MAX. LENGTH, L, BASED ON L = 200r; LEAST RADIUS OF GYRATION = r.

SEISMIC BRACING TABLES

NTS

US Army Corps of Engineers
New York District

Mark	Description	Date	Appr.

U.S. ARMY ENGINEER DISTRICT
CORPS OF ENGINEERS
NEW YORK, NEW YORK

Designed by: | Date: | Size: 24x36
Dwn by: | Ckd by: | Solicitation no.:
Reviewed by: | Contract no.:
Submitted by: | File name: S:\Recent military\fort Drum\FortDrum\Mechanical\00%_Submittal\ForceMOD57708_M-501xxx.dgn | Plot date: 04-AUG-2005 12:04 | Plot by: e3endem3 | Scale: 1:0000/01:00000

FORCE MODERNIZATION EDUCATION (TRANSITIONAL FACILITY)
FORT DRUM, NEW YORK

PN 57708

SEISMIC DETAILS – 2

Sheet reference number:
M–501

Plot Date: 04-AUG-2005 12:04
Submitted by: e3endem3
S:\fileroom\military\Fort Drum\ForceMOD\Mechanical\00% Submittal\ForceMOD57708_M-501xxx.dgn

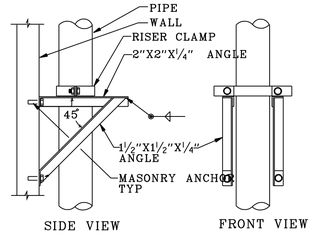

VERTICAL PIPE SUPPORT DETAIL

NTS

NOTE:
THE NUMBER OF PIPES SUPPORTED AND LEVELS OF SUPPORT WILL VARY WITH THE RELATIVE LOCATION TO THE CONDENSING UNIT.

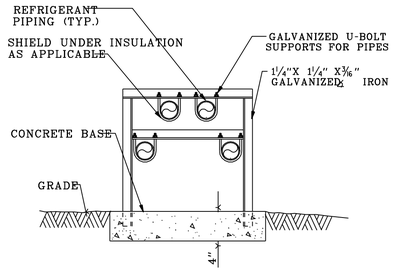

REFRIGERANT PIPE SUPPORT DETAIL

NTS

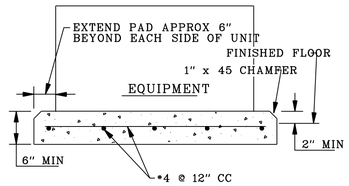

TYPICAL EQUIPMENT PAD DETAIL

NTS

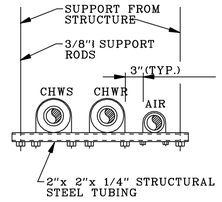

TRAPEZE HANGAR ASSEMBLY

NTS

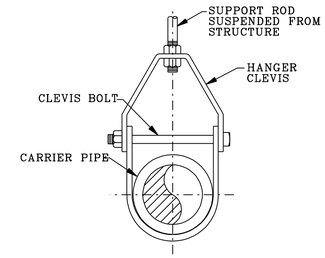

TYPICAL ADJUSTABLE CLEVIS HANGAR

NTS

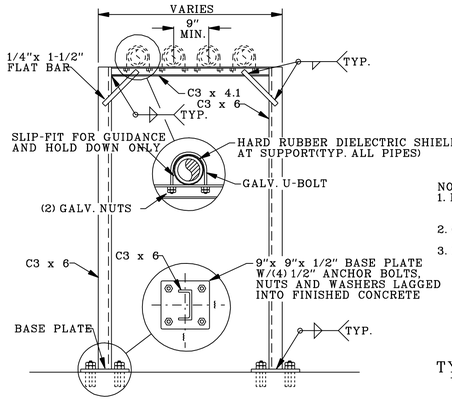

NOTES:
1. NUMBER OF PIPE SUPPORT RUNGS AND OVER-ALL DIMENSIONS VARY WITH NUMBER OF PIPES TO BE SUPPORTED.
2. CLEAN STEEL OF ALL MILL SCALE AND RUST. HOT DIP GALVANIZE ENTIRE STRUCTURE.
3. PROVIDE GALV. STEEL INSULATION SHIELDS FOR INSULATED PIPING.

TYPICAL PIPE SUPPORT STRUCTURE

NTS

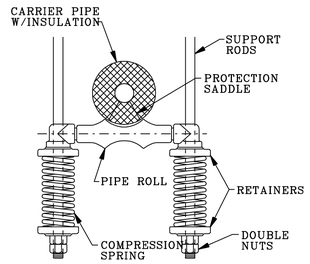

TYPICAL SPRING CUSHION HANGAR DETAIL

NTS

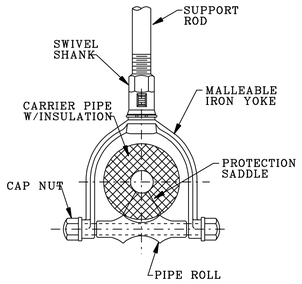

TYPICAL ADJUSTABLE SWIVEL PIPE HANGAR DETAIL

NTS

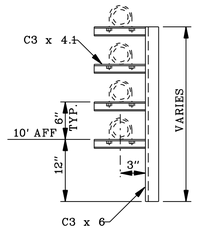

NOTE: NUMBER OF PIPE SUPPORT RUNGS AND OVER-ALL DIMENSION VARIES WITH NUMBER OF PIPES SUPPORTED AND WALL SUPPORT POINTS. REFER TO ARCH. AND STRUCT. DWGS. FOR DETAILS OF SECURING TO WALL STRUCTURE.

TYPICAL WALL SUPPORTED PIPE HANGAR DETAIL

NTS

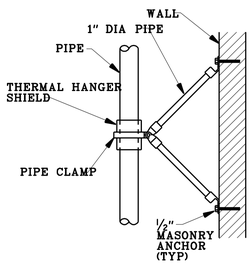

TYPICAL VERTICAL PIPE SUPPORT DETAIL

NTS

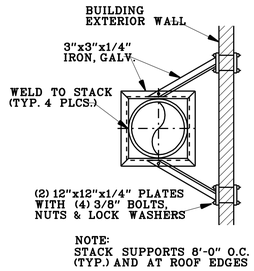

NOTE:
STACK SUPPORTS 8'-0" O.C. (TYP.) AND AT ROOF EDGES

TYPICAL VERTICAL STACK SUPPORT DETAIL

NTS

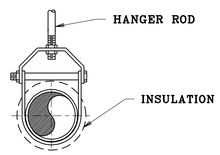

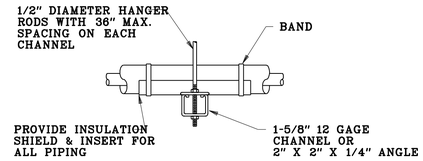

MAXIMUM PIPE/TUBING SUPPORT SPACING, FEET																	
NOM. SIZE	THRU 3/4"	1	1-1/4	1-1/2	2	2-1/2	3	4	5	6	8	10	12	14	16	18	20	24
PIPE	7 FT	7	7	9	10	11	12	14	16	17	19	22	23	25	27	28	30	32
TUBING	5 FT	6	7	8	8	9	10	12	13	14	16	-	-	-	-	-	-	-
NOTE: FOR TRAPEZE HANGER TAKE SPACING OF SMALLEST SIZE ON TRAPEZE																		

X TYPICAL PIPE SUPPORT DETAILS
X|X SCALE: X

US Army Corps of Engineers
New York District

Mark	Description	Date	Appr.

U.S. ARMY ENGINEER DISTRICT
CORPS OF ENGINEERS
NEW YORK, NEW YORK

Designed by: | Date: | Date:
Dwn by: | Ckd by: | Solicitation no.:
Reviewed by: | Contract no.:
Submitted by: | Plot date: 04-AUG-2005 12:04 | Plot by: Admin | Scale: 1:200/0/1:100/0/0

File name: S:\Blanchard Military Fort Drum\Forced\Contract\Mechanical\100%\Submittal\ForceMD057708_M-502xxx.dgn

PN 57708
FORCE MODERNIZATION, EDUCATION /TRANSITIONAL FACILITY
FORT DRUM, NEW YORK

SEISMIC DETAILS – 3

Sheet reference number:
M–502

Submitted by: e3endem3
S:\filer-oom\military\Fort Drum\ForceMD\Mechanical\100% Submittal\ForceMD057708_M-502xxx.dgn
Plot Date: 04-AUG-2005 12:04

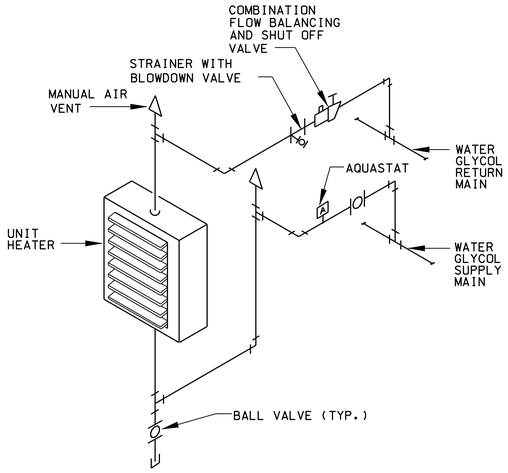

UNIT HEATER (HOT WATER)

PIPING TYPICAL DETAIL

NTS

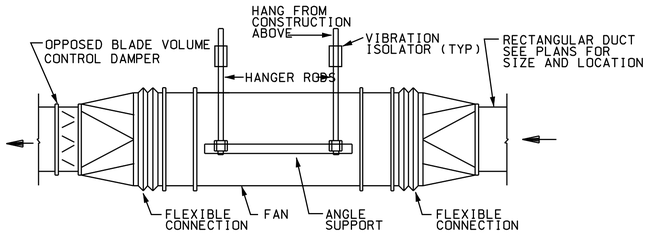

TYPICAL IN-LINE FAN DETAIL

NTS

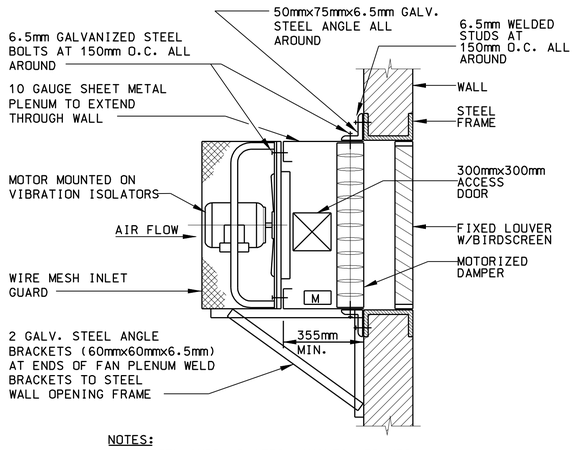

NOTES:

1. ALL STEEL CURB, PLATES, ANGLES, FRAMES, RETAINING ANGLES AND SUPPORT FRAMES SHALL BE GALVANIZED.
2. GROUND ELECTRICAL EQUIPMENT IN ACCORDANCE WITH NEC. FOR WIRING DETAILS SEE ELECTRICAL DRAWINGS.
3. SIZES OF STRUCTURAL STEEL SHAPES AND HARDWARE SHOWN ARE MINIMUM.
4. WELDING SYMBOLS SHALL BE ACCORDING TO AMERICAN INSTITUTE OF STEEL CONSTRUCTION.

WALL EXHAUST AND SUPPLY FAN

NTS

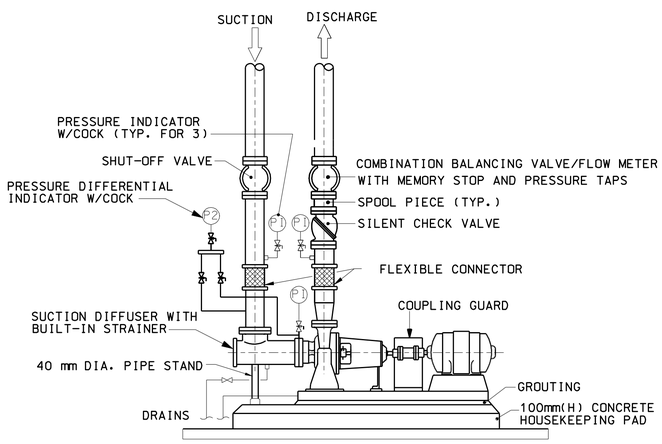

NOTES:

1. PRESSURE INDICATORS AT INLET AND OUTLET MOUNTED AT SAME ELEVATION

BASE MOUNTED, END SUCTION HOT WATER PUMP PIPING ARRANGEMENT (TYP.)

NTS

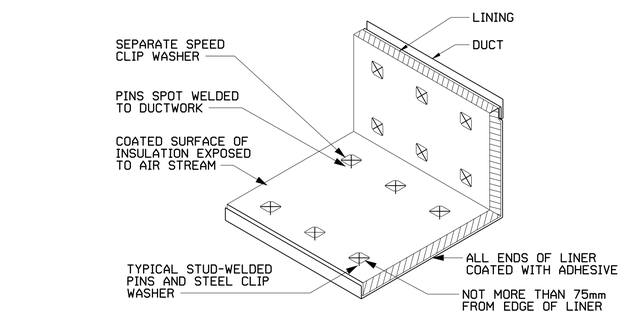

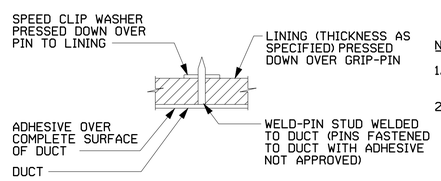

NOTES:

1. PROVIDE 24 GAGE NOSING AT ALL LEADING AND TRAILING EDGES.
2. NOT LESS THAN TWO PINS EACH FACE OF DUCT.

SOUND LINING INSTALLATION DETAIL

NTS

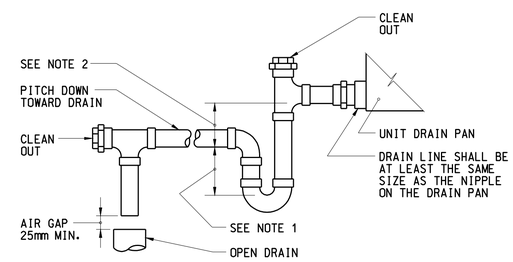

NOTES:

1. ON POSITIVE PRESSURE SYSTEM(E.G. DUCT COILS, BLOW-THRU UNITS, ETC.) DEPTH OF SEAL SHALL BE A MINIMUM OF 1.5 TIMES SYSTEM PRESSURE IN THE DRAIN PAN.
2. ON NEGATIVE PRESSURE SYSTEMS (E.G. DRW-THRU UNITS) DEPTH OF SEAL SHALL BE MINIMUM OF 1.5 TIMES SYSTEM PRESSURE IN THE DRAIN PAN.

TYPICAL CONDENSATE DRAIN TRAP

NTS

US Army Corps of Engineers
New York District

Mark	Description	Date	Appr.

U.S. ARMY ENGINEER DISTRICT
CORPS OF ENGINEERS
NEW YORK, NEW YORK

Designed by: | Date: | Size: 24x36 | Drwn by: | Ckd by: | Solicitation no.: | Reviewed by: | Contract no.: | Submitted by: | File name: S:\Mission\Military\Fort Drum\FortDrum\Mechanical\100% Submittal\FortDrumMOD57708_M-503xxx.dgn | File date: 04-AUG-2005 12:04 | Plot date: 04-AUG-2005 | Rev. No.: 1.00000/1.00000 | Scale: 1.00000/1.00000

FORCE MODERNIZATION EDUCATION (TRANSITIONAL FACILITY
PN 57708
FORT DRUM, NEW YORK

MECHANICAL DETAILS – 1

Sheet reference number:
M–503

Submitted by: e3endem3
S:\fileroom\military\Fort Drum\FortDrumMOD\Mechanical\100% Submittal\FortDrumMOD57708_M-503xxx.dgn
Plot Date: 04-AUG-2005 12:04

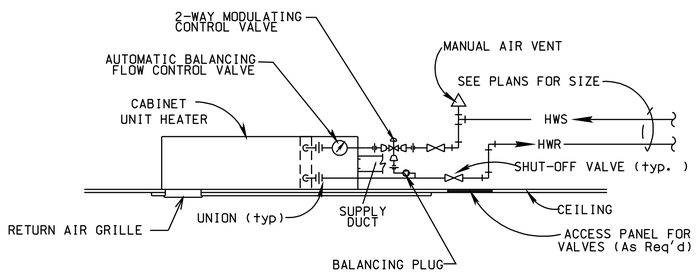

HOT WATER CABINET UNIT HEATER DETAIL

NTS

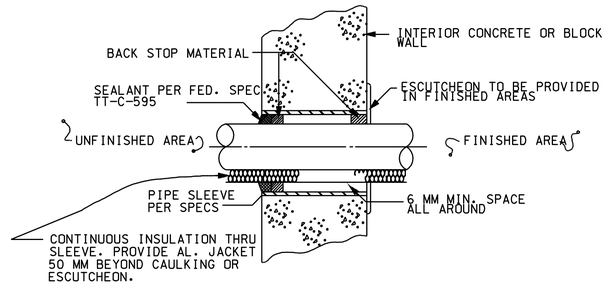

TYPICAL WALL PIPE SLEEVE DETAIL

NTS

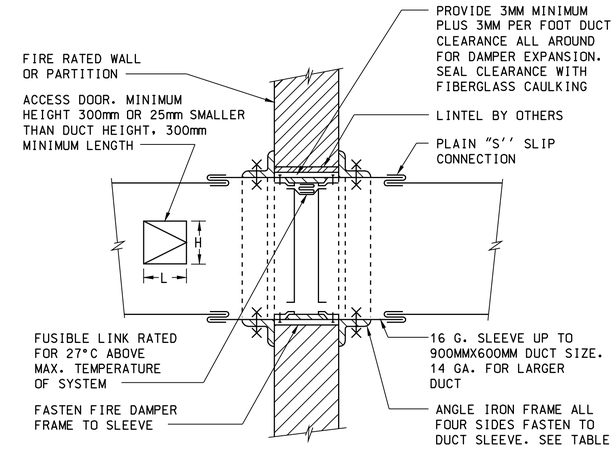

RUSKIN MODEL IBD2 AS STANDARD NYC BSA NO. 292-71-SA OR APPROVED EQUAL

ANGLE IRON TABLE	
WALL OPENING	ANGLE SIZE
UP TO 760MM	25x25x3 MM
780MM TO 1370MM	32x32x3MM
1400MM TO 2130MM	75x50x5MM
2150MM TO 3000MM	75x50x5MM

GENERAL NOTES:

1. FIRE DAMPER TO BE U.L. LABELED N.F.P.A. 90 A (IN N.Y.C., B.S.A. & M.E.A. APPROVED)
2. N.F.P.A. APPROVED INSTALLATION DETAILS TO BE PART OF SUBMISSION OF FIRE DAMPER FOR APPROVAL, WHICH SHALL MEET N.F.P.A. STANDARD 90 A (IN N.Y.C., B.S.A. & M.E.A. APPROVED)
3. DETAILS SHOWN ARE FOR FIRE DAMPERS IN HORIZONTAL DUCTWORK. FOR FIRE DAMPERS IN VERTICAL DUCTWORK DETAILS SIMILAR
4. ACCESS DOOR IS SHOWN IN SIDE OF DUCT; IF FUSIBLE LINK IS MORE ACCESIBLE FROM BOTTOM OF DUCT RELOCATE ACCESS DOOR
5. FOR FIRST 3 m OF FAN DISCHARGE DUCTS AND FOR DUCT SIZES LESS THAN 200mm DEEP, FIRE DAMPER BLADES SHALL BE INSTALLED IN POCKET OUTSIDE OF AIR STREAM
6. FIRE DAMPERS IN VERTICAL DUCT SHALL BE SPRING LOADED

LOW PRESSURE FIRE DAMPER

NTS

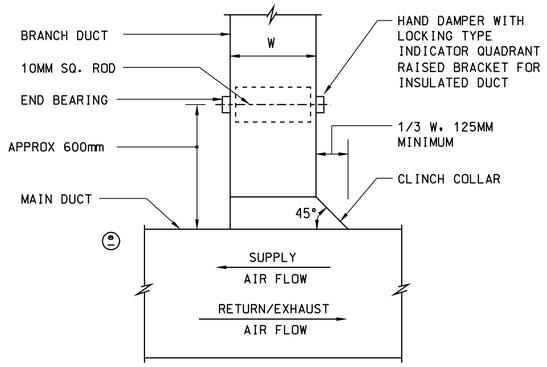

NOTE:
FURNISH THIS TYPE CONNECTION WHEN SINGLE LINE DUCTWORK IS INDICATED AS THIS. FOR BRANCHES WITH LESS THAN 25% OF THE TOTAL AIR FLOW

RECTANGULAR DUCT WITH VOLUME DAMPER

NTS

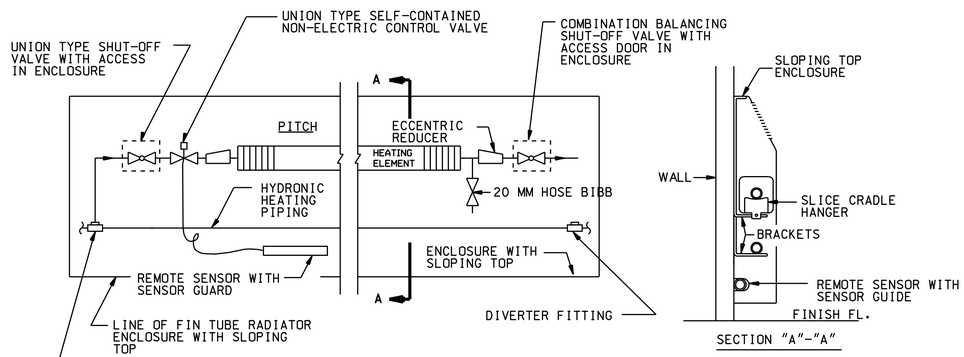

NOTE:
RADIATOR ENCLOSURE TO ENCLOSE RADIATOR AND ALL PIPING. ENCLOSURE TO EXTEND FROM WALL TO WALL UNLESS OTHERWISE INDICATED

TYPICAL FIN-TUBED PIPING DETAIL

NTS

US Army Corps of Engineers
New York District

Mark	Description	Date	Appr.

Mark	Description	Date	Appr.

Size: 24x36 | Date: | Solicitation no.: | Contract no.: | Plot date: 04-AUG-2005 12:04 | Plot by: e3endem3 | Date: 1/2/2001 1/2/2001 | Designed by: | Dwn by: | Ckd by: | Reviewed by: | Submitted by: | File name: S:\Mission\Military\Fort Drum\FDX\Mechanical\100% Submittal\ForceMOD\57708_M-504xxx.dgn

U.S. ARMY ENGINEER DISTRICT
CORPS OF ENGINEERS
NEW YORK, NEW YORK

PN 57708
FORCE MODERNIZATION EDUCATION (TRANSITIONAL FACILITY
FORT DRUM, NEW YORK

MECHANICAL DETAILS - 2

Sheet reference number:
M-504

Submitted by: e3endem3
s:\fileroom\military\Fort Drum\ForceMOD\Mechanical\100% Submittal\ForceMOD57708_M-504xxx.dgn
Plot Date: 04-AUG-2005 12:04

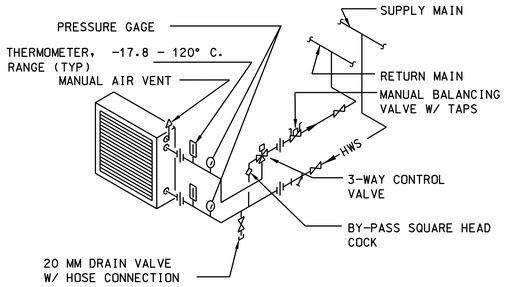

NOTES:

1. ARRANGE PIPING TO PERMIT REMOVAL OF COIL.
2. THE MANUAL BALANCING VALVES SHALL BE INSTALLED BY THE CONTRACTOR IN CONFORMANCE WITH VALVE MANUFACTURER'S RECOMMENDED SPACING UP AND DOWNSTREAM FROM PIPE CHANGES IN DIRECTION AND/OR OTHER VALVES AND COMPONENTS IN THE PIPING.

TYPICAL HOT WATER COIL PIPING DETAIL - AHU'S

NTS

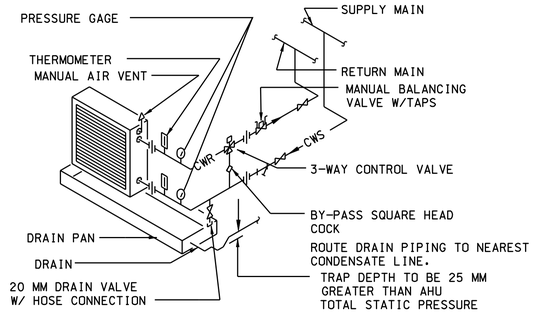

NOTES:

1. ARRANGE PIPING TO PERMIT REMOVAL OF COIL.
2. THE FLOW CONTROL BALANCING VALVES SHALL BE INSTALLED BY THE CONTRACTOR IN CONFORMANCE WITH VALVE MANUFACTURER'S RECOMMENDED SPACING UP AND DOWNSTREAM FROM PIPE CHANGES IN DIRECTION AND/OR OTHER VALVES AND COMPONENTS IN THE PIPING.

TYPICAL CHILLED WATER COIL PIPING DETAIL - AHU'S

NTS

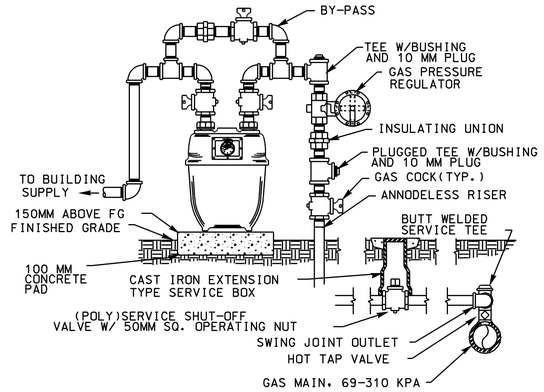

NOTES:

1. LINE SIZES AS CALLED FOR ON SITE PLAN.
2. CONTRACTOR SHALL BE RESPONSIBLE FOR CONNECTING GAS LINE TO THE EXISTING 300 MM GAS MAIN.
3. CONTRACTOR SHALL PROVIDE A SOLENOID VALVE IN THE GAS LINE TO THE EQUIPMENT IN THE MECHANICAL ROOM.

TYPICAL GAS SERVICE (W/BY-PASS) DETAIL

NTS

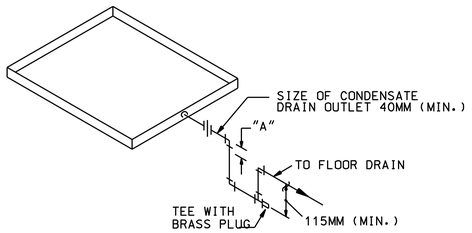

NOTE:
DIMENSION "A' SHALL BE EQUAL TO 1.5 TIMES THE UNIT FAN STATIC PRESSURE IN PA OF WATER

TYPICAL PIPING AT DRIP PAN FOR AHU'S DETAIL

NTS

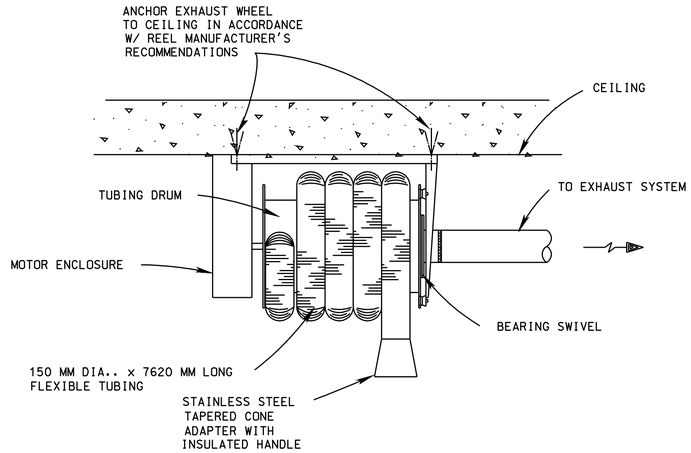

TYPICAL VEHICLE EXHAUST REEL

NTS

US Army Corps of Engineers
New York District

Mark	Description	Date	Appr.

U.S. ARMY ENGINEER DISTRICT
CORPS OF ENGINEERS
NEW YORK, NEW YORK

Designed by: | Date: | Job no.:
Dwn by: | Ckd by: | Solicitation no.:
Reviewed by: | Contract no.:
Submitted by: | Plot date: 08-AUG-2005 14:36 | Plot scale: 1:1 | Size: 00000x00000

File name: S:\Mission Military\Fort Drum\FortDrum\Mechanical\005_Submittal\mech005708_M-505xxx.dgn

PN 57708
FORCE MODERNIZATION EDUCATION / TRANSITIONAL FACILITY
FORT DRUM, NEW YORK

MECHANICAL DETAILS - 3

Sheet reference number:
M-505

Submitted by: e3endem3
S:\fileroom\military\Fort Drum\FortDrum\Mechanical\100% Submittal\ForceMOD\57708_M-505xxx.dgn
Plot Date: 08-AUG-2005 14:36

UNIT HEATER (UH) SCHEDULE

UNIT NO.	LOCATION	OUT PUT KW	AIR DATA		HOT WATER DATA			TYPE	W	REMARKS
			CMS (MIN)	EAT °C	EWT°C	COIL PRESSURE DROP(mm)	L/S			
UH-1	RM 115 MECH. ROOM	4.565	0.2360	10	82.2	670	0.1135	HORIZONTAL PROPELLER	9	SEE NOTES 1,2,3
UH-2	RM 115 MECH. ROOM	4.565	0.2360	10	82.2	670	0.1135	HORIZONTAL PROPELLER	9	SEE NOTES 1,2,3
UH-3	RM 108 STORAGE	4.565	0.2360	10	82.2	670	0.1135	HORIZONTAL PROPELLER	9	SEE NOTES 1,2,3
UH-4	RM 109 TOOL ROOM	1.992	0.115	10	82.2	244	0.0505	HORIZONTAL PROPELLER	9	SEE NOTES 1,2,3
UH-5	RM 116 ARMS VAULT	4.565	0.2366	10	82.2	670	0.1135	HORIZONTAL PROPELLER	9	SEE NOTES 1,2,3
UH-6	RM 114 ELEC. ROOM	1.992	0.115	10	82.2	244	0.0505	HORIZONTAL PROPELLER	9	SEE NOTES 1,2,3
UH-7	ATTIC	4.565	0.2360	10	82.2	670	0.1135	HORIZONTAL PROPELLER	9	SEE NOTES 2,3,4
UH-8	ATTIC	4.565	0.2360	10	82.2	670	0.1135	HORIZONTAL PROPELLER	9	SEE NOTES 2,3,4
UH-9	ATTIC	4.565	0.2360	10	82.2	670	0.1135	HORIZONTAL PROPELLER	9	SEE NOTES 2,3,4
UH-10	ATTIC	4.565	0.2360	10	82.2	670	0.1135	HORIZONTAL PROPELLER	9	SEE NOTES 2,3,4
UH-11	ATTIC	4.565	0.2360	10	82.2	670	0.1135	HORIZONTAL PROPELLER	9	SEE NOTES 2,3,4
UH-12	ATTIC	4.565	0.2360	10	82.2	670	0.1135	HORIZONTAL PROPELLER	9	SEE NOTES 2,3,4

NOTES:
1- UNIT SHALL BE THERMOSTATICALLY CONTROLLED BY WALL MOUNTED THERMOSTAT.
2- PROVIDE LOCAL SAFETY DISCONNECT SWITCH.
3- HEATING COIL PERFORMANCE DATA IS BASED ON 50% PROPYLENE GLYCOL.
4- UNIT SHALL BE THERMOSTATICALLY CONTROLLED BY UNIT MOUNTED THERMOSTAT.

FINNED TUBE RADIATION FINNED SECTION SCHEDULE

UNIT NO.	EWT (°C)	LWT (°C)	PIPE		FINS		WATTS PER MM	LENGTH (MM)	ROW	TOTAL WATTS	L/S	ENCLOSURE TYPE	REMARKS
			TYPE	SIZE (MM)	TYPE	SIZE (MM)							
FT-1	82.2	71.1	COPPER	19.1	ALUM.	70x76x0.40	0.567	1524	1	864	0.032	NOM. 356mm HIGH W/SLOPING TOP	SEE NOTE 1,2,3,7
FT-2	82.2	71.1	COPPER	19.1	ALUM.	70x76x0.40	0.567	610	1	346	0.032	NOM. 356mm HIGH W/SLOPING TOP	SEE NOTE 1,2,3,7
FT-3	82.2	71.1	COPPER	19.1	ALUM.	70x76x0.40	0.567	1830	1	1036	0.032	NOM. 356mm HIGH W/SLOPING TOP	SEE NOTE 1,2,3,4,7
FT-4	82.2	71.1	COPPER	19.1	ALUM.	70x76x0.40	0.567	4267	1	2420	0.0438	NOM. 356mm HIGH W/SLOPING TOP	SEE NOTE 1,2,3,4,7
FT-5	82.2	71.1	COPPER	19.1	ALUM.	70x76x0.40	0.567	4880	1	3111	0.0569	NOM. 356mm HIGH W/SLOPING TOP	SEE NOTE 1,2,3,4,5,7
FT-6	82.2	71.1	COPPER	19.1	ALUM.	70x76x0.40	0.567	2438	1	1383	0.032	NOM. 356mm HIGH W/SLOPING TOP	SEE NOTE 1,2,3,7
FT-7	82.2	71.1	COPPER	19.1	ALUM.	70x76x0.40	0.567	2438	1	1383	0.032	NOM. 356mm HIGH W/SLOPING TOP	SEE NOTE 1,2,3,7
FT-8	82.2	71.1	COPPER	19.1	ALUM.	70x76x0.40	0.567	1524	1	864	0.032	NOM. 356mm HIGH W/SLOPING TOP	SEE NOTE 1,2,3,6,7
FT-9	82.2	71.1	COPPER	19.1	ALUM.	70x76x0.40	0.567	4877	1	2765	0.0502	NOM. 356mm HIGH W/SLOPING TOP	SEE NOTE 1,2,3,7
FT-10	82.2	71.1	COPPER	19.1	ALUM.	70x76x0.40	0.567	5486	1	3111	0.0572	NOM. 356mm HIGH W/SLOPING TOP	SEE NOTE 1,2,3,7
FT-11	82.2	71.1	COPPER	19.1	ALUM.	70x76x0.40	0.567	3048	1	1728	0.032	NOM. 356mm HIGH W/SLOPING TOP	SEE NOTE 1,2,3,7
FT-12	82.2	71.1	COPPER	19.1	ALUM.	70x76x0.40	0.567	4877	1	2765	0.0509	NOM. 356mm HIGH W/SLOPING TOP	SEE NOTE 1,2,3,4,5,7
FT-13	82.2	71.1	COPPER	19.1	ALUM.	70x76x0.40	0.567	4877	1	2765	0.0509	NOM. 356mm HIGH W/SLOPING TOP	SEE NOTE 1,2,3,4,5,7
FT-14	82.2	71.1	COPPER	19.1	ALUM.	70x76x0.40	0.567	1676	1	951	0.032	NOM. 356mm HIGH W/SLOPING TOP	SEE NOTE 1,2,3,7
FT-15	82.2	71.1	COPPER	19.1	ALUM.	70x76x0.40	0.567	1676	1	951	0.032	NOM. 356mm HIGH W/SLOPING TOP	SEE NOTE 1,2,3,7
FT-16	82.2	71.1	COPPER	19.1	ALUM.	70x76x0.40	0.567	2743	1	1555	0.032	NOM. 356mm HIGH W/SLOPING TOP	SEE NOTE 1,2,3,7
FT-17	82.2	71.1	COPPER	19.1	ALUM.	70x76x0.40	0.567	1219	1	691	0.032	NOM. 356mm HIGH W/SLOPING TOP	SEE NOTE 1,2,3,7
FT-18	82.2	71.1	COPPER	19.1	ALUM.	70x76x0.40	0.567	2286	1	1296	0.032	NOM. 356mm HIGH W/SLOPING TOP	SEE NOTE 1,2,3,7
FT-19	82.2	71.1	COPPER	19.1	ALUM.	70x76x0.40	0.567	2896	1	1642	0.032	NOM. 356mm HIGH W/SLOPING TOP	SEE NOTE 1,2,3,7
FT-20	82.2	71.1	COPPER	19.1	ALUM.	70x76x0.40	0.567	2743	1	1555	0.032	NOM. 356mm HIGH W/SLOPING TOP	SEE NOTE 1,2,3
FT-21	82.2	71.1	COPPER	19.1	ALUM.	70x76x0.40	0.567	1016	1	576	0.032	NOM. 356mm HIGH W/SLOPING TOP	SEE NOTE 1,2,3

NOTES:
1- ALL FIN TUBE RADIATORS SHALL BE PROVIDED WITH NON-ELECTRIC THERMOSTATICALLY CONTROLLED SUPPLY VALVES TO MAINTAIN ROOM TEMPERATURE AT 12.8 DEGREES CELSIUS. VALVES AND PIPING SHALL BE HOUSED WITHIN RADIATOR ENCLOSURE.
2- BOTTOM OF BASEBOARD ENCLOSURE SHALL BE MOUNTED 150 MM ABOVE FINISHED FLOOR. ENCLOSURE SHALL EXTEND FULL LENGTH OF WALL, SEE FLOOR PLAN FOR WALL LENGTH.
3- PERFORMANCE BASED ON 50% PROPYLENE GLYCOL.
4- FT CONTROLLED AS ONE BY ONE CONTROL VALVE.
5- FT SECTION IN MULTIPLE PLACES, SEE FLOOR PLAN.
6- FT CABINET SHALL ONLY COVER FT ELEMENT FROM CORNER TO WHERE HWS ENTERS WALL NOT FULL WALL LENGTH.
7- DIVERTER FITTINGS AT BYPASS LINE NOT REQUIRED.

CABINET UNIT HEATER (CHU) SCHEDULE

UNIT NO.	LOCATION	AIR DATA		HOT WATER DATA				TYPE	REMARKS
		CMS	EAT °C	EWT°C	KW	COIL PRESSURE DROP(mm)	L/S		
CUH-1	VESTIBULE (RM 101)	0.108	10	82.2	3.176	50	0.0757	CEILING MOUNTED FULLY RECESSED	SEE NOTES 1,2,3
CUH-2	LOBBY (RM 120)	0.108	10	82.2	3.176	50	0.0757	CEILING MOUNTED FULLY RECESSED	SEE NOTES 1,2,3
CUH-3	STAIR #2	0.297	10	82.2	10.03	335	0.2334	WALL INVERTED	SEE NOTES 1,2,3,4
CUH-4	STAIR #1	0.203	10	82.2	7.178	183	0.1703	WALL INVERTED	SEE NOTES 1,2,3,4

NOTES:
1- UNIT SHALL BE THERMOSTATICALLY CONTROLLED BY WALL MOUNTED THERMOSTAT.
2- PROVIDE LOCAL SAFETY DISCONNECT SWITCH.
3- HEATING COIL PERFORMANCE DATA IS BASED ON 50% PROPYLENE GLYCOL.
4- SURFACE MOUNT 200 ABOVE FLOOR, BOTTOM OUTLET, TOP FRONT INLET.

FAN SCHEDULE

UNIT NO.	LOCATION	SERVICE	TYPE	L/S	ESP Pa	RPM	KW	VOLTAGE	PHASE	SONES	REMARKS
EF-1	LOCKER RM 110	LOCKER RM EXHAUST	CENTRIFUGAL-DIRECT DRIVE RECESSED-CEILING	119	125	1050	0.084	120	1	2.5	SEE NOTES 2,3,4
EF-2	MECHANICAL RM 115	LADIES RM, MENS RM, JANITORS CLOSET EXHAUST	CENTRIFUGAL-DIRECT DRIVE RECESSED-CEILING	424	187	1050	0.344	120	1	6.0	SEE NOTES 2,3,4
EF-4	COPY RM 124	COPY RM EXHAUST	CENTRIFUGAL-DIRECT DRIVE RECESSED-CEILING	68	125	1550	0.083	120	1	2.1	SEE NOTES 1,2,3
EF-6	ELECTRIC RM 114	ELECTRIC RM EXHAUST	CENTRIFUGAL-DIRECT DRIVE RECESSED-CEILING	165	125	1550	0.132	120	1	3.9	SEE NOTES 2,3,6
EF-7	BREAK RM 219	WOMENS TOILET EXHAUST	CENTRIFUGAL-DIRECT DRIVE RECESSED-CEILING	424	187	1050	0.344	120	1	6.0	SEE NOTES 2,3,4
EF-10	CONFERENCE RM 105	CONFERENCE RM EXHAUST	CENTRIFUGAL-DIRECT DRIVE RECESSED-CEILING	311	125	1050	0.273	120	1	5.6	SEE NOTES 1,2,3
EF-11	BREAK RM 104	BREAK RM EXHAUST	CENTRIFUGAL-DIRECT DRIVE RECESSED-CEILING	311	125	1050	0.273	120	1	5.6	SEE NOTES 1,2,3
EF-13	ATTIC	VEHICLE PROCESSING EXHAUST	CENTRIFUGAL-BELT DRIVE	3210	375	887	1.425	200	3	19.5	SEE NOTES 2,3,5
EF-14	ATTIC	VEHICLE PROCESSING EXHAUST	CENTRIFUGAL-BELT DRIVE	3210	375	887	1.425	200	3	19.5	SEE NOTES 2,3,5
EF-15	ATTIC	WAREHOUSE BUILDING EXHAUST	CENTRIFUGAL-BELT DRIVE	3210	375	887	1.425	200	3	19.5	SEE NOTES 2,3,5
EF-16	ATTIC	WAREHOUSE BUILDING EXHAUST	CENTRIFUGAL-BELT DRIVE	3210	375	887	1.425	200	3	19.5	SEE NOTES 2,3,5
EF-17	ELEVATOR MACHINE ROOM	ELEVATOR MACHINE EXHAUST	CENTRIFUGAL-DIRECT DRIVE RECESSED-CEILING	312	125	1050	0.273	120	1	5.6	SEE NOTES 2,3,6
SF-1	MECHANICAL RM 115	MECHANICAL RM SUPPLY	PACKAGED BELT DRIVE PROPELLER WALL FAN	566	125	678	0.164	120	1	6.9	SEE NOTE 2,7

NOTES:
1. CONTROLLED BY ON / OFF SWITCH IN ROOM.
2. PROVIDE LOCAL SAFETY DISCONNECT SWITCH.
3. PROVIDE BACKDRAFT DAMPER.
4. CONTROLLED BY OCCUPIED/UNOCCUPIED CYCLE, FOR AHU SERVING SPACE.
5. FANS SHALL NOT EXCEED A SOUND PRESSURE LEVEL OF 60 dbA MEASURED 1 METER FROM CABINET. FANS SHALL BE TWO SPEED.
6. PROVIDE WALL MOUNTED THERMOSTAT. INTERLOCK WITH OUTDOOR AIR DAMPER.
7. PROVIDE LOCKABLE WIRE GUARD OVER FAN AND MOTOR.

US Army Corps of Engineers
New York District

U.S. ARMY ENGINEER DISTRICT
CORPS OF ENGINEERS
NEW YORK, NEW YORK

FORCE MODERNIZATION EDUCATION /TRANSITIONAL FACILITY
FORT DRUM, NEW YORK

MECHANICAL SCHEDULES

Submitted by: e3endem3 Plot Date: 04-AUG-2005 12:05
S:\fileroom\military\Fort Drum\ForceMOD\ForceMOD57708\Mechanical\100% Submittal\ForceMOD57708_MH-600xxx.dgn

PUMP (P) SCHEDULE

DESIGNATION	LOCATION	SERVICE	FLOW L/S	PRESSURE HEAD KPa	TYPE SERIES	(KW)	RPM	IMPELLER SIZE mm	INLET SIZE mm	OUTLET SIZE mm	EFF %	REMARKS
P-1	MECHANICAL RM	HOT WATER SYSTEM MAU-1, MAU-2, AHU-1	7.02	194	END SUCTION CENTRIFUGAL	5.625	1750	206	50	37	60	SEE NOTE 1
P-2		HOT WATER SYSTEM MAU-1, MAU-2, AHU-1	7.02	194		5.625	1750	206	50	37	60	
P-3		HOT WATER SYSTEM FIN TUBE, U.H. CAB.U.H.	2.43	194		3.73	1750	197	37	37	48	
P-4		HOT WATER SYSTEM FIN TUBE, U.H. CAB.U.H.	2.43	194		3.73	1750	197	32	32	48	
P-5		CHILLED WATER SYSTEM AHU-1	8.21	194		5.625	1750	213	50	37	53	
P-6		CHILLED WATER SYSTEM AHU.1	8.21	194	END SUCTION CENTRIFUGAL	5.625	1750	213	50	37	53	
P-7		BOILER CIRCULATING	4.7	30	IN-LINE CENTRIFUGAL	.375	1750	92	75	75	56	
P-8		BOILER CIRCULATING	4.7	30	IN-LINE CENTRIFUGAL	.375	1750	92	75	75	56	

NOTES:
1. PERFORMANCE BASED ON 50% GLYCOL. MOTOR SHALL BE NON OVERLOADING.

AIR HANDLING UNIT (AHU) SCHEDULE

PLAN DESIGNATION	SUPPLY FAN FLOW RATE (L/s)	SUPPLY FAN MINIMUM OUTDOOR AIR (L/s)	SUPPLY FAN EXTERNAL STATIC PRESSURE (Pa)	SUPPLY FAN RPM	SUPPLY FAN BRAKE POWER (kW)	SUPPLY FAN MOTOR POWER (kW)	RETURN/EXHAUST FAN FLOW RATE (L/s)	RETURN/EXHAUST FAN EXTERNAL STATIC PRESSURE (Pa)	RETURN/EXHAUST FAN RPM	RETURN/EXHAUST FAN BRAKE POWER (kW)	RETURN/EXHAUST FAN MOTOR POWER (kW)	FILTER TYPE	FILTER EFFICIENCY (%)	ELECTRICAL (V/Hz/PHASE)	NOTES
AHU-1	3,539	1,180	313	1445	3.6	3.7	3,539	313	709	2.9	3.7	PLEATED	MERV 8	200/60/3	1,2,3
AHU-2	5,663	1,227	313	752	6.6	7.5	5,663	313	497	3.7	5.5	PLEATED	MERV 8	200/60/3	1,2,3
MAU-1	3,209	3,209	313	1729	3.4	3.7	NA	NA	NA	NA	NA	PLEATED	MERV 8	200/60/3	1,2,3,4
MAU-2	3,209	3,209	313	1729	3.4	3.7	NA	NA	NA	NA	NA	PLEATED	MERV 8	200/60/3	1,2,3,4

NOTES:
(1) SEE DRAWINGS FOR ARRANGEMENT
(2) EXTERNAL STATIC PRESSURE INCLUDES FILTERS, DUCTWORK, AND COILS NOT IN AHU CASING
(3) FANS SHALL NOT EXCEED A SOUND PRESSURE LEVEL OF 60 dbA MEASURED 1 METER FROM THE CABINET.
(4) FANS SHALL BE TWO SPEED.

BOILER SCHEDULE

UNIT NO.	LOCATION	HOT WATER KG/MM²	KW IBR GROSS OUTPUT	KW IBR NET RATING	TEMP °C EWT	TEMP °C LWT	FIRING RATE OIL TYPE	FIRING RATE OIL L/M	FIRING RATE GAS TYPE	FIRING RATE GAS KW	FORCED DRAFT FAN W	REMARKS
B-1	MECH RM	.03	502	436	82	71	—	—	NATURAL	626	—	SEE NOTE 1, 2
B-2	MECH RM	.03	502	436	82	71	—	—	NATURAL	626	—	SEE NOTE 1, 2

NOTES:
1- PROVIDE LOCAL SAFETY DISCONNECT SWITCH.
2- HEATING HOT WATER SHALL BE OPERATED WITH 50% PROPYLENE GLYCOL.

AIR SEPARATOR (AS) SCHEDULE

UNIT NO.	SYSTEM SERVED	MIN CAP L/S	REMARKS
AS-1	HEATING	9.45	SEE NOTE 1
AS-2	COOLING	8.21	SEE NOTE 1

NOTES
1- ASME

DUCTLESS SPLIT SYSTEM AIR CONDITIONING UNIT SCHEDULE

INDOOR UNIT UNIT NO.	INDOOR UNIT DRY L/S HI-LO	INDOOR UNIT MOISTURE REMOVAL L/H	INDOOR UNIT DIMENSIONS (MM) WxDxH	INDOOR UNIT APPR. WT KG	OUTDOOR UNIT UNIT NO.	OUTDOOR UNIT TOTAL COOLING CAPACITY KW	OUTDOOR UNIT DIMENSIONS (MM) WxDxH	OUTDOOR UNIT APPR. WT KG	REMARKS
AC-1	335-250	3.3	1400x230x330	26	DX-1	7.032	860x310x1245	92	SEE NOTES 1,2,3,4
AC-2	335-250	3.3	1400x230x330	26	DX-2	7.032	860x310x1245	92	SEE NOTES 1,2,3,4

NOTES
1. PROVIDE LOW AMBIENT CONTROLS
2. UNIT SHALL BE PROVIDED WITH A CRANKCASE HEATER BY WALL MOUNTED THERMOSTAT.
3. UNIT SHALL BE THERMOSTATICALLY CONTROLLED.
4. FOR ELECTRICAL CHARACTERISTICS, SEE ELECTRICAL DRAWINGS.
5. UNIT SHALL OPERATE AT CAPACITY SHOWN WHEN CONDENSING UNIT IS LOCATED AS SHOWN ON SITE PLAN.

EXPANSION TANK (ET) SCHEDULE

PLAN DESIGNATION	TYPE	LOCATION	CAPACITY (L)	RATED PRESSURE (kPa)	MAXIMUM PRESSURE (kPa)	MINIMUM PRESSURE (kPa)	NOTES
ET-1	VERTICAL BLADDER	BOILER RM	500	862	200	124	1,2,3
ET-2	VERTICAL BLADDER	BOILER RM	205	862	200	124	1,2,3

NOTES:
(1) CONSTRUCTED IN ACCORDANCE WITH ASME SECTION VIII DIVISION 1
(2) ET SHALL SET ON 150 mm CONCRETE EQUIPMENT BASE
(3) ROUTE DRAINS TO NEAREST FLOOR DRAIN

ALL NOTES SHOWN MAY NOT APPEAR IN SCHEDULE

DIFFUSERS, GRILLES & REGISTERS SCHEDULE

PLAN DESIGNATION	BASIS OF DESIGN MANUFACTURER	BASIS OF DESIGN	TYPE	MAX. PRESS. DROP (Pa)	MAXIMUM NC LEVEL	FINISH	NOTES
RG-1	TUTTLE & BAILEY	T70	HORIZONTAL BAR SINGLE DEFLECTION	24.88	30	WHITE	(1) (2)
EG-1	TUTTLE & BAILEY	T70	HORIZONTAL BAR SINGLE DEFLECTION	24.88	30	WHITE	(3)
SG-1	TUTTLE & BAILEY	T50	HORIZONTAL BAR SINGLE DEFLECTION	24.88	30	WHITE	(1) (2)

NOTES:
(1) DIFFUSER, GRILLE, OR REGISTER SHALL BE SUITABLE FOR LAY-IN CEILING
(2) USE 600 X 600 MODULAR SIZE, SEE PLANS FOR DUCT SIZE
(3) SEE PLANS FOR GRILL AND REGISTER SIZE

HEATING WATER COIL (HC) SCHEDULE

PLAN DESIGNATION	QTY	SERVICE	FLOW RATE (L/s)	MINIMUM COIL AREA (m^2)	MAXIMUM FACE VELOCITY (m/s)	MAXIMUM PRESSURE DROP (Pa)	MINIMUM ROWS	AIRSIDE CONDITIONS EAT (°C)	AIRSIDE CONDITIONS LAT (°C)	WATERSIDE CONDITIONS FLOW RATE (L/s)	WATERSIDE CONDITIONS EWT (°C)	WATERSIDE CONDITIONS LWT (°C)	WATERSIDE CONDITIONS ACV SIZE (mm)	MAXIMUM PRESSURE DROP (kPa) COIL	MAXIMUM PRESSURE DROP (kPa) ACV	MAXIMUM PRESSURE DROP (kPa) TOTAL	NOTES
HC-1	1	AHU-1	3,539	1.4	2.5	190	2	2.3	29.4	1.4	82.2	60.0	32	6.0	19.4	25.4	(1)
HC-2	1	AHU-2	5,663	2.1	2.7	190	2	7.2	29.4	1.8	82.2	60.0	40	6.0	19.4	25.4	(1)
HC-3	1	MAU-1	3,209	1.2	2.6	190	2	-28.9	12.8	1.9	82.2	60.0	2@32	6.0	10.5	16.4	(1)(2)
HC-4	1	MAU-2	3,209	1.2	2.6	190	2	-28.9	12.8	1.9	82.2	60.0	2@32	6.0	10.5	16.4	(1)(2)

NOTES:
(1) CAPACITIES BASED ON 50% PROPYLENE GLYCOL MIXTURE FOR HEATING WATER
(2) TWO CONTROL VALVES SHALL BE CONNECTED IN PARALLEL. THE FIRST CONTROL VALVE SHALL MODULATE TO 100% BEFORE THE SECOND CONTROL VALVE IS OPENED.

WATER COOLING COIL (WCC) SCHEDULE

PLAN DESIGNATION	QTY	SERVICE	FLOW RATE (L/s)	MINIMUM COIL AREA (m^2)	MAXIMUM FACE VELOCITY (m/s)	MAXIMUM PRESSURE DROP (Pa)	MINIMUM ROWS	AIRSIDE CONDITIONS EAT (°C DB)	AIRSIDE CONDITIONS EAT (°C WB)	AIRSIDE CONDITIONS LAT (°C DB)	AIRSIDE CONDITIONS LAT (°C WB)	WATERSIDE CONDITIONS FLOW RATE (L/s)	WATERSIDE CONDITIONS EWT (°C)	WATERSIDE CONDITIONS ACV SIZE (mm)	MAXIMUM PRESSURE DROP (kPa) COIL	MAXIMUM PRESSURE DROP (kPa) ACV	MAXIMUM PRESSURE DROP (kPa) TOTAL	NOTES
WCC-1	1	AHU-1	3,539	1.4	2.5	190	6	25.4	18.4	12.8	12.5	3.4	7.2	50	53.8	22.4	76.2	(1)
WCC-2	1	AHU-2	5,663	2.2	2.5	190	6	24.8	17.9	12.8	12.4	5.0	7.2	65	59.8	23.9	83.7	(1)

NOTES:
(1) CAPACITIES BASED ON 40% PROPYLENE GLYCOL MIXTURE FOR CHILLED WATER

GLYCOL MAKE-UP PACKAGE (GT)

DESIGNATION ON DRAWING	LOCATION	SYSTEM SERVED	MAKE-UP CAPACITY LITERS/MIN.@KPa	MOTOR SIZE WATTS	PRESSURE RANGE KPa	SOLUTION CONTAINER LITERS	DIMENSIONS (HEIGHT X DIA.) mm x mm	REMARKS
GT-1	MECH ROOM	HEATING WATER PIPING	6.81@345	250	69-345	190	1080X710	See NOTES 1,2, 3
GT-2	MECH ROOM	COOLING WATER PIPING	6.81@345	250	69-345	190	1080X710	See NOTES 1,2, 3

NOTES:
1. UNIT SHALL INCUDE: SOLUTION CONTAINER AND LID (TRANSLUCENT POLYETHYLENE CONTAINER), PUMP, MOTOR, MAGNETIC STARTER, STAINER, LOCAL SAFETY DISCONNECT SWITCH, SHUT-OFF VALVE, RELIEF VALVE, PRIMING VALVE, PRESSURE REDUCING VALVE (PRV), PRESSURE GAUGE, PRESSURE TANK AND PRESSURE CONTROL.
2. UNIT SHALL FEATURE A CUT-OFF AND ALARM ARRANGEMENT WHICH WILL STOP THE PUMP IN CASE OF EXCESSIVE PRESSURE, OR A LOW SOLUTION LEVEL, AND ACTIVATE AN AUDIBLE ALARM (WHICH CAN BE SILENCED) AND A VISUAL ALARM.
3. SETTING FOR FILL PRESSURE OF PRV WILL BE 82.8 Pka.

AIR COOLED LIQUID CHILLER SCHEDULE

UNIT NO.	CHILLER CAPACITY KW (NOM.) @ 34.65°C AMBIENT AIR	CHILLER L/S	CHILLER TEMP (°C) IN	CHILLER TEMP (°C) OUT	CHILLER PRESS DROP (MAX) (MM)	CHILLER EER	CHILLER INPUT KW/TON	COMPRESSOR NOM SIZE (KW)	COMPRESSOR VOLT/PHASE	COMPRESSOR STEPS OF UNLOADING	COMPRESSOR NO. OF COMP.	CONDENSER NOM. SIZE (KW)	CONDENSER NO. OF COILS	CONDENSER FANS NO. OF FANS	CONDENSER FANS W	CONDENSER FANS VOLT/PHASE	REMARKS
CH-1	199/69.1	8.67	12.8	7.2	2073	9.8	69.1/56.6	211	NOTE 5	100-75-50-25	4	211	2	6	746	NOTE 5	SEE NOTES 1, 2,3,4,5

NOTE:
1-PROVIDE REDUCED VOLTAGE STARTERS FOR EACH COMPRESSOR.
2-UNIT SHALL BE COMPATIBLE WITH AHU-1.
3-CHILLER SHALL BE OPERATED WITH 50% PROPYLENE GLYCOL.
4-PROVIDE LOCAL SAFETY DISCONNECT SWITCH.
5-SEE ELECTRICAL DRAWINGS FOR ELECTRICAL POWER CHARACTERISTICS.

US Army Corps of Engineers
New York District

U.S. ARMY ENGINEER DISTRICT
CORPS OF ENGINEERS
NEW YORK, NEW YORK

PN 57708
FORCE MODERNIZATION (TRANSITIONAL FACILITY)
FORT DRUM, NEW YORK

MECHANICAL SCHEDULES

Sheet reference number:
M-601

Submitted by: e3endem3
S:\fileroom\military\Fort Drum\ForceMOD\Mechanical\100% Submittal\ForceMOD57708_MH-601xxx.dgn
Plot Date: 04-AUG-2005 12:05

VEHICLE EXHAUST HOSE SCHEDULE

DESIGNATION	LOCATION	SERVICE	L/S	PRESSURE HEAD ESP Pa	KW	PH	V	RPM	REMARKS
COEF-1	VEHICLE PROC'G BAYS	VEHICLE EXHAUST	760	2000	2.2	3	208	2900	SEE NOTE 1
COEF-2	VEHICLE PROC'G BAYS	VEHICLE EXHAUST	760	2000	2.2	3	208	2900	SEE NOTE 1
COEF-3	VEHICLE PROC'G BAYS	VEHICLE EXHAUST	760	2000	2.2	3	208	2900	SEE NOTE 1
COEF-4	VEHICLE PROC'G BAYS	VEHICLE EXHAUST	760	2000	2.2	3	208	2900	SEE NOTE 1

NOTE:

1. PROVIDE MAGNETIC STARTER AND LOCAL SAFETY DISCONNECT SWITCHES.

INFRA-RED HEATER SCHEDULE

UNIT NO.	LOCATION	KW INPUT	W	PH	V	TUBE LENGTH MM	REMARKS
IRH-1	VEHICLE PROCESSING	43.95	29.9	1	120	15240	SEE NOTES 1,2,3,4
IRH-2	VEHICLE PROCESSING	43.95	29.9	1	120	15240	SEE NOTES 1,2,3,4
IRH-3	VEHICLE PROCESSING	43.95	29.9	1	120	15240	SEE NOTES 1,2,3,4
IRH-4	VEHICLE PROCESSING	43.95	29.9	1	120	15240	SEE NOTES 1,2,3,4
IRH-5	WAREHOUSE	58.60	29.9	1	120	21336	SEE NOTES 1,2,3,4
IRH-6	WAREHOUSE	58.60	29.9	1	120	21336	SEE NOTES 1,2,3,4

NOTES:
1. PROVIDE STRAIGHT TUBE CONFIGURATION, DIRECT SPARK IGNITION, INTERMITTENT BLOWER WITH PRE-PURGE CYCLE, ELECTRONIC FLAME MONITORING, ETC.
2. UNIT SHALL BE DIRECTLY VENTED OUTDOORS WITH INSULATED FLUE PIPE AND COMBUSTION AIR SUPPLIED DIRECTLY FROM OUTDOORS BY PIPE.
3. UNITS SHALL BE THERMOSTATICALLY CONTROLLED.
4. PROVIDE LOCAL SAFETY DISCONNECT SWITCH.

US Army Corps of Engineers
New York District

Mark	Description	Date	Appr.

Mark	Description	Date	Appr.

U.S. ARMY ENGINEER DISTRICT
CORPS OF ENGINEERS
NEW YORK, NEW YORK

Designed by: | Date: | Sheet no.: M-602
Dwn by: | Ckd by: | Solicitation no.:
Reviewed by: | Contract no.:
Submitted by: | Plot date: 04-AUG-2005 12:04 | Plot by: e3endem | Scale: 0.000000:1.000000
File name: S:\Standard Military Fort Drum\Fort Drum\Mechanical\100%_Submittal\ForceMOD57708_M-602xxx.dgn

FORCE MODERNIZATION EDUCATION /TRANSITIONAL FACILITY
FORT DRUM, NEW YORK

MECHANICAL SCHEDULES-3

Sheet reference number:
M-602

MECHANICAL SCHEDULES-3

M-602

Submitted by: e3endem3 Plot Date: 04-AUG-2005 12:04
S:\filer-oom\military\Fort Drum\ForceMOD\Mechanical\100% Submittal\ForceMOD57708_M-602xxx.dgn

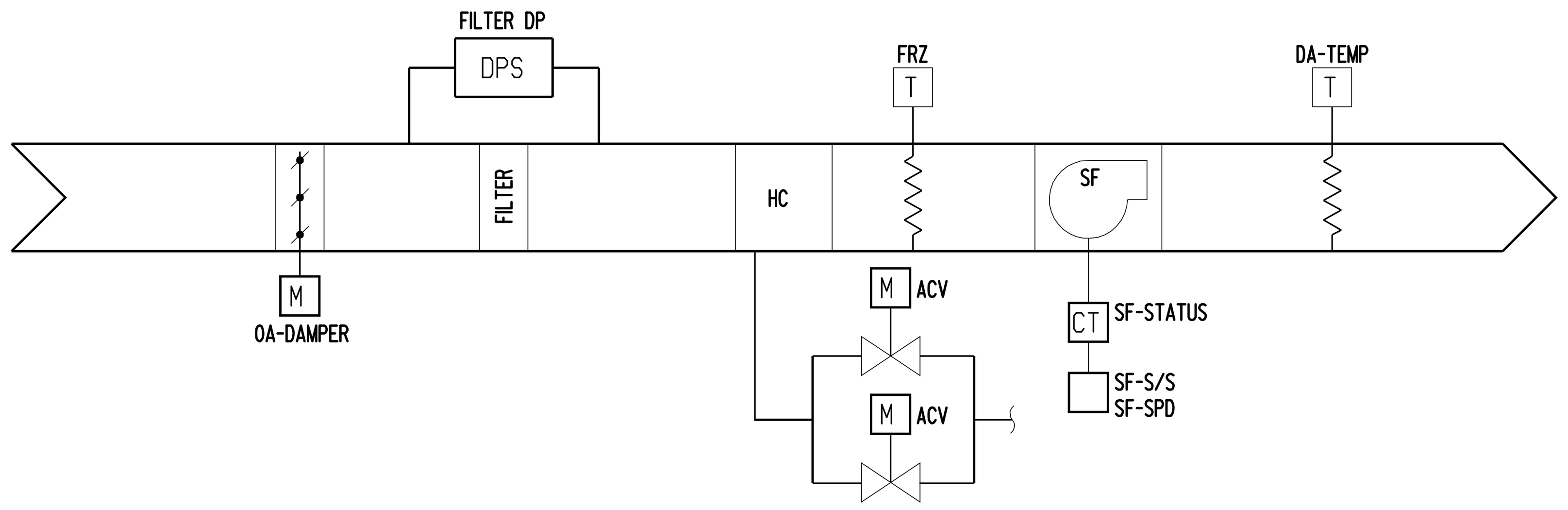

MAU-1, MAU-2
NO SCALE

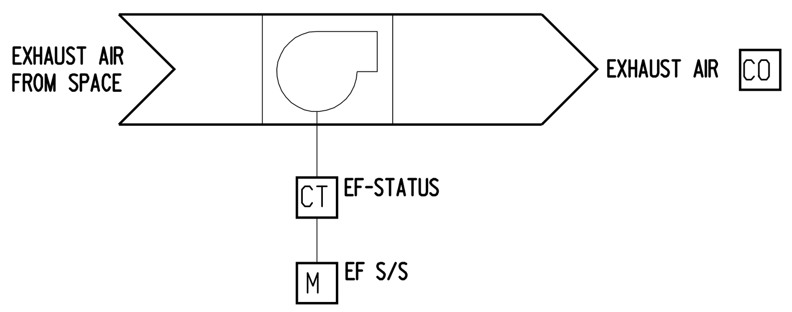

COEF-XX, AND EF-XX
NO SCALE

MAKE-UP AIR UNIT 1 & 2								
PLAN DESIGNATION	POINT DESCRIPTION	POINT TYPE						NOTES
		AO	DO	AI	DI	VP	ALARMS	
OA-TEMP	OUTDOOR AIR TEMPERATURE			X				COMMON TO ALL UNITS
OA-DMPR	OUTDOOR AIR DAMPER	X						
FILTER-DP	FILTER DIFFERENTIAL PRESSURE			X			X	
FRZ-STAT	FREEZE STATUS				X		X	
HC-ACV	HEATING COIL AUTOMATIC CONTROL VALVE	X						
DA-TEMP	DISCHARGE AIR TEMPERATURE			X				
DA-SPT	DISCHARGE AIR SETPOINT					X		
SF-STATUS	SUPPLY FAN STATUS				X		X	
SF-SS	SUPPLY FAN START/STOP		X					
SF-SPD	SUPPLY FAN SPEED		X					OFF/LOW/HIGH
EF-STATUS	EXHAUST FAN STATUS				X		X	
EF-SS	EXHUAST FAN START/STOP		X					
EF-SPD	EXHAUST FAN SPEED		X					OFF/LOW/HIGH

POINT LIST - GENERAL								
PLAN DESIGNATION	POINT DESCRIPTION	POINT TYPE						NOTES
		AO	DO	AI	DI	VP	ALARMS	
OA-TEMP	OUTDOOR AIR TEMPERATURE			X				COMMON TO ALL UNITS
B-SPT	BOILER SET POINT	X						
HW-TEMP	HEATING WATER SUPPLY TEMPERATURE			X				
HW-ACV	HEATING WATER AUTOMATIC CONTROL VALVE	X						
HW-SPT	HEATING WATER SET POINT					X		
CW-TEMP	CHILLED WATER SUPPLY TEMPERATURE			X				
CW-SPT	CHILLED WATER SET POINT					X		
ELEC-MTR	BUILDING ELECTRIC METER			X				
GAS-MTR	BUILDING GAS METER			X				
WAT-MTR	BUILDING WATER METER			X				

SEQUENCE OF OPERATION

VEHICLE TAILPIPE EXHAUST FAN CONTROL (COEF-1, COEF-2, COEF-3, COEF-4):

1. VEHICLE TAILPIPE EXHAUST FAN CONTROL SHALL BE INDEPENDENT OF DDC SYSTEM BY LOCAL MANUAL SWITCH AND INTERLOCKED WITH MAKE-UP AIR UNIT (MAU-1) AS DESCRIBED IN EXHAUST FAN AND MAKE-UP AIR UNIT CONTROL SEQUENCE.

EXHAUST FAN AND MAKE-UP AIR UNIT CONTROL (EF-13, EF-14, EF-15, EF-16, MAU-1 & MAU-2):

1. EXHAUST FANS AND MAKE-UP AIR UNITS SHALL BE CONTROLLED BY BUILDING DDC SYSTEM.
2. EXHAUST FANS SHALL BE ASSOCIATED AS FOLLOWS:
   - A. EF-13 & EF-14 WITH MAU-1
   - B. EF-15 & EF-16 WITH MAU-2
3. EXHAUST FANS SHALL BE CONTROLLED IN A LEAD/LAG ARRANGEMENT WITH THE LEAD FAN CHOSEN MANUALLY THROUGH THE DDC SYSTEM.
4. WHEN SYSTEM IS IN THE “OCCUPIED” MODE OF OPERATION, AS DETERMINED BY PROGRAMMED OCCUPANCY SCHEDULE OR OVERRIDE SIGNAL FROM THE CONTROL SYSTEM, LEAD EXHAUST FAN AND ASSOCIATED MAU SHALL OPERATE AS FOLLOWS:
   - A. THE LEAD EXHAUST FAN SHALL BE ENERGIZED AND OPERATE AT HALF SPEED.
   - B. IF AIRFLOW FOR THE LEAD FAN IS NOT PROVEN, THE LAG FAN SHALL START AND OPERATE AT HALF SPEED AND AN ALARM SHALL BE ACTIVATED IN THE DDC SYSTEM INDICATING LEAD FAN FAILURE. IF AIRFLOW FOR THE LAG FAN IS NOT PROVEN, AN ALARM SHALL BE ACTIVATED IN THE DDC SYSTEM INDICATING LAG FAN FAILURE.
   - C. WHEN EXHAUST FAN IS “ON”, MAKE-UP AIR UNIT SHALL OPERATE AS FOLLOWS:
     - 1) OUTDOOR AIR DAMPER WITHIN UNIT SHALL OPEN. SUPPLY FAN SHALL BE PREVENTED FROM STARTING UNTIL DAMPER HAS BEEN VERIFIED OPEN BY END SWITCH.
     - 2) MAU SUPPLY FAN SHALL START AND OPERATE AT HALF SPEED. FAN OPERATION SHALL BE VERIFIED TO DDC SYSTEM. IF FAN START IS NOT VERIFIED, FAN SHALL STOP UNTIL MANUALLY RESET AND AN ALARM SHALL SOUND IN DDC SYSTEM.
     - 3) MAU-1 FAN SPEED SHALL OPERATE AS FOLLOWS:
       - A) IF ZERO, ONE, OR TWO VEHICLE EXHAUST FANS (COEF-1, COEF-2, COEF-3, AND COEF-4) ARE “ON” MAU-1 SUPPLY FAN SHALL OPERATE AT HALF SPEED.
       - B) IF THREE OR FOUR VEHICLE TAILPIPE EXHAUST FANS ARE “ON” MAU-1 SUPPLY FAN SHALL OPERATE AT FULL SPEED.
     - 4) OUTSIDE AIR SHALL BE TEMPERED BY HEATED WATER HEATING COIL. MODULATING AUTOMATIC CONTROL VALVE SHALL MAINTAIN SUPPLY AIR TEMPERATURE OF 65°F (ADJUSTABLE).
5. WHEN SYSTEM IS IN THE “UNOCCUPIED” MODE OF OPERATION, AS DETERMINED BY OCCUPANCY SCHEDULE OR OVERRIDE SIGNAL FROM THE CONTROL SYSTEM, EXHAUST FANS AND MAU SHALL OPERATE AS FOLLOWS:
   - A. EXHAUST FANS SHALL STOP.
   - B. MAU OUTDOOR AIR DAMPER SHALL BE CLOSED.
   - C. MAU SUPPLY FAN SHALL BE DE-ENERGIZED.
   - D. MAU HEATED WATER COIL AUTOMATIC CONTROL VALVE SHALL BE CLOSED.
6. PROVIDE FREEZESTAT ON DOWNSTREAM SIDE OF MAU HEATING COIL TO DE-ENERGIZE MAU SUPPLY FAN AND CLOSE OUTSIDE AIR DAMPER.
7. PROVIDE FILTER GAGE TO SHOW PRESSURE DROP ACROSS FILTER BANK ON MAU
8. PROVIDE “OFF-LOW-HIGH” SPEED SWITCHES FOR EF-13, EF-14, EF-15, AND EF-16. SWITCHES FOR EF-13 AND EF-14 SHALL BE LOCATED ON THE EAST WALL OF THE VEHICLE MAINTENANCE BAY. SWITCHES FOR EF-15 AND EF-16 SHALL BE LOCATED ON THE WEST WALL OF THE WAREHOUSE.
9. ACTIVATION OF MANUAL EMERGENCY SHUTDOWN SWITCH SHALL CAUSE EXHAUST FANS AND MAU SUPPLY FANS TO SHUTDOWN. DDC PANEL SHALL REQUIRE MANUAL RESETTING AFTER MANUAL SWITCH IS RESET.
10. WHEN THE CARBON MONOXIDE (CO) SENSOR INDICATES CO LEVELS ABOVE 20 PARTS PER MILLION (ADJUSTABLE), AN AUDIBLE AND VISIBLE ALARM SHALL SOUND, EF-13 AND EF-14 SHALL OPERATE AT FULL SPEED, COEF-1, COEF-2, COEF-3, AND COEF-4 SHALL CONTINUE TO OPERATE, OVERHEAD DOORS OH-1 AND OH-3 SHALL OPEN, AND MAU-1 SUPPLY FAN SHALL OPERATE AT FULL SPEED REGARDLESS OF MANUAL SWITCH POSITION. DDC PANEL SHALL REQUIRE MANUAL RESETTING AFTER MANUAL SWITCH IS RESET.
11. ACTIVATION OF FIRE ALARM FROM FIRE ALARM PANEL TO DDC SYSTEM SHALL OVERRIDE EXHAUST FAN STATUS TO “ON”, CAUSE MAU SUPPLY FAN TO SHUT DOWN, AND AN ALARM SHALL ALERT OPERATOR THROUGH DDC SYSTM. DDC PANEL SHALL REQUIRE MANUAL RESETTING AFTER MANUAL SWITCH IS RESET.

SEQUENCE OF OPERATION

GAS FIRED HEATING WATER BOILERS AND PUMPS CONTROL (B-1 & P-7, B-2 & P8):

1. BOILERS AND PUMPS SHALL BE ASSOCIATED AS FOLLOWS:
   - A. B-1 WITH P-7.
   - B. B-2 WITH P-8.
2. BOILER AND ASSOCIATED PUMP SHALL BE CONTROLLED BY UNIT MOUNTED CONTROL PANEL AND SHALL HAVE CONTACTS FOR REMOTE START STOP THROUGH THE DDC CONTROL SYSTEM.
3. B-1 AND B-2 SHALL BE CONTROLLED IN A LEAD/LAG ARRANGEMENT, WITH THE LEAD BOILER MANUALLY CHOSEN THROUGH THE DDC SYSTEM.
4. ONCE BOILER IS STARTED, UNIT MOUNTED CONTROL PANEL SHALL CYCLE BOILER TO MAINTAIN BOILER WATER TEMPERATURE SET POINT 93°C (200°F, ADJUSTABLE).
5. HEATING SUPPLY WATER TEMPERATURE SET POINT SHALL BE RESET BASED ON THE FOLLOWING SCHEDULE (ADJUSTABLE):

OUTDOOR AIR TEMPERATURE, °F	SUPPLY WATER TEMPERATURE, °F
-5°F	180°F
70°F	130°F

6. HEATING SUPPLY WATER THREE-WAY AUTOMATIC CONTROL VALVE SHALL MODULATE TO MAINTAIN HEATING SUPPLY WATER SET POINT. IN THE EVENT OF VALVE FAILURE, FLOW SHALL BE MAINTAINED THROUGH THE BOILERS.
7. PROVIDE CARBON MONOXIDE AND GAS DETECTION IN THE MECHANICAL ROOM. FUEL SHALL BE SHUT OFF TO ALL EQUIPMENT IN THE ROOM IF THE CARBON MONOXIDE LEVEL EXCEEDS 20 PPM, THE GAS LEVEL EXCEEDS 25% OF THE LEL, OR IF THE EMERGENCY FUEL SHUT OFF BUTTOM IS DEPRESSED.

AIR COOLED CHILLER AND PUMP CONTROL (CH-1, P-5, & P-6):

1. AIR COOLED PACKAGE CHILLER SHALL BE CONTROLLED BY UNIT MOUNTED CONTROL PANEL WITH REMOTE START/STOP THROUGH DDC CONTROL SYSTEM.
2. CHILLED WATER PUMPS P-5 AND P-6 SHALL BE CONTROLLED IN A LEAD/LAG ARRANGEMENT WITH THE LEAD PUMP CHOSEN MANUALLY THROUGH THE DDC SYSTEM.
3. WHEN OUTDOOR AIR TEMPERATURE IS ABOVE SET POINT 10°C (50°F, ADJUSTABLE), DDC CONTROL SYSTEM SHALL START AND OPERATE LEAD CHILLED WATER PUMP CONTINUOUSLY.
4. IF WATER FLOW FOR LEAD PUMP IS NOT PROVEN, LAG PUMP SHALL START AND OPERATE CONTINUOUSLY AND AN ALARM IN DDC SYSTEM SHALL BE ACTIVATED FOR FAILURE OF LEAD PUMP. IF WATER FLOW FOR LAG PUMP IS NOT PROVEN AN ALARM IN DDC SYSTEM SHALL BE ACTIVATED FOR FAILURE OF LAG PUMP AND CHILLER SHALL NOT START.
5. WHEN WATER FLOW HAS BEEN PROVEN, UNIT MOUNTED PANEL SHALL ALLOW CHILLER TO OPERATE TO MAINTAIN CHILLED WATER SUPPLY TEMPERATURE OF 7.2°C (45°F, ADJUSTABLE). IF WATER FLOW HAS NOT BEEN PROVEN, CHILLER SHALL NOT START AND AN ALARM INDICATING CHILLER START FAILURE SHALL BE ACTIVATED IN UNIT CONTROL PANEL AND DDC CONTROL PANEL.

SEQUENCE OF OPERATION

HEATING WATER DISTRIBUTION PUMPS (P-3, & P-4) CONTROL:

1. P-3 AND P-4 ARE ASSOCIATED WITH FIN TUBE RADIATOR HEATERS, UNIT HEATERS, AND CABINET HEATERS.
2. P-3 AND P-4 SHALL BE CONTROLLED IN A LEAD/LAG ARRANGEMENT WITH THE LEAD PUMP CHOSEN MANUALLY THROUGH THE DDC SYSTEM.
3. THE LEAD PUMP SHALL BE ENERGIZED AND OPERATE CONTINUOUSLY WHEN THE OUTDOOR AIR TEMPERATURE IS BELOW 15°C (60°F, ADJUSTABLE) AND B-1 OR B-2 IS ON.
4. IF WATER FLOW FOR THE LEAD PUMP IS NOT PROVEN, THE LAG PUMP SHALL START AND OPERATE CONTINUOUSLY AND AN ALARM SHALL BE ACTIVATED IN THE DDC SYSTEM INDICATING LEAD PUMP FAILURE. IF WATER FLOW FOR LAG PUMP IS NOT PROVEN, AN ALARM SHALL BE ACTIVATED IN DDC SYSTEM INDICATING LAG PUMP FAILURE.

FIN TUBE RADIATOR HEATERS (FT-XX) CONTROL:

1. FIN TUBE RADIATOR HEATERS SHALL BE CONTROLLED INDEPENDENTLY FROM DDC SYSTEM VIA UNIT MOUNTED, NON-ELECTRIC, CAPILLARY TEMPERATURE SENSING AUTOMATIC CONTROL VALVES (ACV).
2. WHEN SPACE AIR TEMPERATURE IS BELOW FT TEMPERATURE SET POINT 13°C (55°F, ADJUSTABLE), ACV SHALL MODULATE TO MAINTAIN SPACE AIR TEMPERATURE.

UNIT HEATERS (UH-XX) CONTROL:

1. UNIT HEATERS SHALL BE CONTROLLED INDEPENDENTLY FROM DDC SYSTEM BY UNIT MOUNTED THERMOSTAT AND UNIT HEATER FAN.
2. WHEN SPACE AIR TEMPERATURE IS BELOW SET POINT 13°C (55°F, ADJUSTABLE), UNIT FAN SHALL TURN ON/OFF TO MAINTAIN SPACE TEMPERATURE.

CABINET UNIT HEATERS (CUH-XX) CONTROL:

1. CABINET HEATERS SHALL BE CONTROLLED INDEPENDENTLY FROM DDC SYSTEM BY SPACE MOUNTED THERMOSTAT.
2. WHEN SPACE AIR TEMPERATURE IS BELOW SET POINT 13°C (55°F, ADJUSTABLE), UNIT FAN SHALL TURN ON/OFF TO MAINTAIN SPACE TEMPERATURE.

EXHAUST FANS (EF-4, EF-10 & EF-11) CONTROL:

1. EXHAUST FANS EF-4, EF-10 & EF-11 SHALL BE CONTROLLED INDEPENDENTLY FROM DDC SYSTEM BY LOCAL ON/OFF SWITCH IN ROOM.

EXHAUST FANS (EF-1, EF-2, & EF-7) CONTROL:

1. EXHAUST FANS EF-1, EF-2 & EF-7 SHALL BE CONTROLLED BY BUILDING DDC SYSTEM.
2. WHEN SYSTEM IS IN THE “OCCUPIED” MODE OF OPERATION, EXHAUST FANS SHALL START AND RUN CONTINUOUSLY.
3. WHEN SYSTEM IS IN THE “UNOCCUPIED” MODE OF OPERATION, EXHAUST FANS SHALL STOP.

EXHAUST FANS (EF-6 & EF-17) CONTROL:

1. EXHAUST FANS EF-6 & EF-7 SHALL BE CONTROLLED INDEPENDENT OF BUILDING DDC SYSTEM BY WALL MOUNTED THERMOSTAT.
2. WHEN SPACE AIR TEMPERATURE IS ABOVE 32°C (90°F, ADJUSTABLE): FA
   - A. OUTDOOR AIR DAMPER SHALL OPEN. EXHAUST FAN SHALL BE PREVENTED FROM STARTING UNTIL DAMPER HAS BEEN VERIFIED OPEN BY END SWITCH.
   - B. EXHAUST FAN SHALL START AND OPERATE CONTINUOUSLY.

0 2000 4000 10000
SCALE: 1:100

US Army Corps of Engineers
New York District

Mark	Description	Date	Appr.

Mark	Description	Date	Appr.

U.S. ARMY ENGINEER DISTRICT
CORPS OF ENGINEERS
NEW YORK, NEW YORK

Designed by: | Date: | Size: A1
Dwn by: | Ckd by: | Solicitation no.:
Reviewed by: | Contract no.:
Submitted by: | Plot date: 08-AUG-2005 16:18 | Plot by: e3endem3 | Scale: 1.000000:1.000000
File name: S:\fileroom\military\Fort Drum\ForceMOD\Mechanical\100% Submittal\ForceMOD57708_MH-700xxx.dgn

PN 57708
FORCE MODERNIZATION EDUCATION /TRANSITIONAL FACILITY
FORT DRUM, NEW YORK

CONTROLS
AIR HANDLING UNIT
FLOW DIAGRAM SHEET 1

Sheet reference number:
M-700

Submitted by: e3endem3 Plot Date: 08-AUG-2005 16:18
S:\fileroom\military\Fort Drum\ForceMOD\Mechanical\100% Submittal\ForceMOD57708_MH-700xxx.dgn

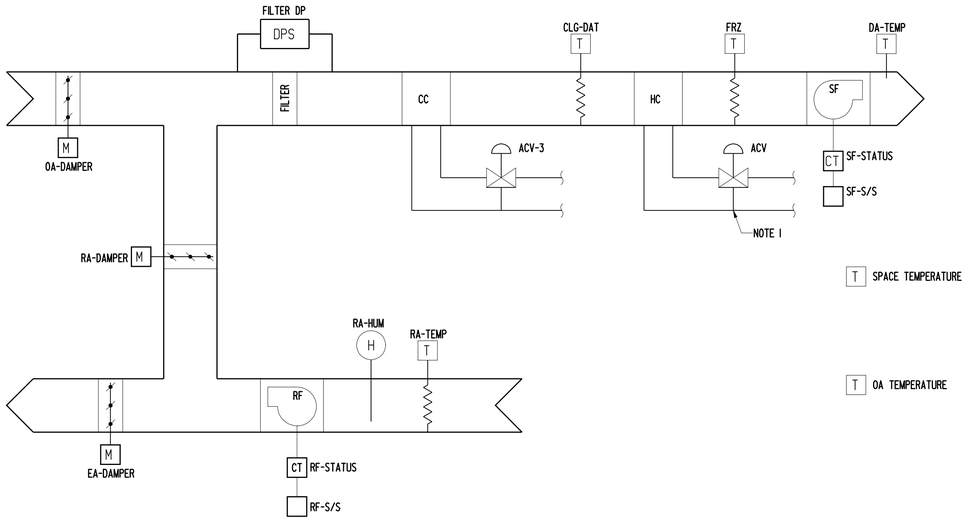

AHU-1, AHU-2
NO SCALE

SEQUENCE OF OPERATION

NORMAL CONTROL POSITIONS:

1. "NORMAL" POSITIONS OF CONTROLLED DEVICES SHALL BE POSITION DEVICE RETURNS TO ON POWER FAILURE. WHERE NORMAL POSITION IS NOT LISTED, ACTUATOR SHALL FAIL IN POSITION AT TIME OF POWER FAILURE. NORMAL POSITIONS SHALL BE AS FOLLOWS:
   - A. OUTSIDE AIR DAMPERS(S) - CLOSED UNLESS NOTED OTHERWISE.
   - B. RETURN AIR DAMPER - OPEN UNLESS NOTED OTHERWISE.
   - C. EXHAUST AIR DAMPER - CLOSED UNLESS NOTED OTHERWISE.
   - D. AUTOMATIC CONTROL VALVE (ACV) ON HEATING COILS - OPEN TO COIL UNLESS NOTED OTHERWISE.
   - E. AUTOMATIC CONTROL VALVE (ACV) ON COOLING COILS - CLOSED TO COIL UNLESS NOTED OTHERWISE.

CONSTANT VOLUME AIR HANDLING UNIT (AHU-1 & AHU-2) CONTROL:

1. AHU SHALL BE CONTROLLED BY BUILDING DDC SYSTEM. AHU-1 AND AHU-2 SHALL HAVE INDEPENDENT OCCUPANCY SCHEDULES.
2. WHEN SYSTEM IS IN THE "OCCUPIED" MODE OF OPERATION, AS DETERMINED BY PROGRAMMED OCCUPANCY SCHEDULE OR OVERRIDE SIGNAL FROM THE CONTROL SYSTEM, AHU-1 AND AHU-2 SHALL OPERATE AS FOLLOWS:
   - A. SUPPLY FAN SHALL START AND RUN CONTINUOUSLY. IF SUPPLY AIRFLOW IS NOT PROVEN FAN SHALL BE STOPPED, AND AN ALARM SHALL BE ACTIVATED.
   - B. RETURN FAN SHALL START AND RUN CONTINUOUSLY. IF RETURN AIRFLOW IS NOT PROVEN FAN SHALL BE STOPPED, AND AN ALARM SHALL BE ACTIVATED IN THE DDC SYSTEM.
   - C. OUTDOOR AIR DAMPER SHALL OPEN.
   - D. WHEN SPACE TEMPERATURE IS BELOW HEATING SET POINT 21°C (70°F, ADJUSTABLE), HEATING COIL ACV SHALL MODULATE TO MAINTAIN SPACE AIR TEMPERATURE.
   - E. AS SPACE AIR TEMPERATURE RISES ABOVE HEATING SET POINT, OUTDOOR AIR DAMPER, RETURN AIR DAMPER, AND EXHAUST AIR DAMPER SHALL MODULATE IN PARALLEL TO MAINTAIN SPACE AIR TEMPERATURE.
   - F. WHEN OUTDOOR AIR TEMPERATURE IS ABOVE 21°C (70°F, ADJUSTABLE), OUTDOOR AIR DAMPER AND EXHAUST AIR DAMPER SHALL CLOSE TO MINIMUM POSITION, AND RETURN AIR DAMPER SHALL OPEN.
   - G. ON FURTHER RISE IN SPACE TEMPERATURE ABOVE COOLING SET POINT 24°C (75°F, ADJUSTABLE), WATER COOLING COIL ACV SHALL MODULATE TO MAINTAIN SPACE TEMPERATURE
3. WHEN SYSTEM IS IN THE "UNOCCUPIED" MODE OF OPERATION, AS DETERMINED BY OCCUPANCY SCHEDULE OR OVERRIDE SIGNAL FROM THE CONTROL SYSTEM, AHU-1 AND AHU-2 SHALL OPERATE AS FOLLOWS:
   - A. SUPPLY FAN AND RETURN FAN SHALL STOP AND OUTDOOR AIR DAMPER SHALL CLOSE FULLY.
4. PROVIDE FILTER GAGE TO SHOW PRESSURE DROP ACROSS FILTER BANK ON AHU.
5. SAFETY SHUTDOWN CIRCUIT SHALL BE PROVIDED EXTERNAL TO SYSTEM CONTROLLER. CIRCUIT SHALL BE DIRECTLY CONNECTED TO STARTERS OF MOTOR-POWERED EQUIPMENT AND SHALL FUNCTION REGARDLESS OF STATUS OF SYSTEM CONTROLLER. IN EVENT OF SYSTEM SHUTDOWN, DEVICES SHALL RETURN TO NORMAL POSITION. FOLLOWING SHALL COMPRISE SAFETY SHUT DOWN CIRCUIT:
   - A. FREEZE STAT BELOW SET POINT OF 4°C (40°F, ADJUSTABLE).
   - B. SMOKE DETECTION IN SUPPLY OR RETURN AIR DUCT.
   - C. BUILDING FIRE ALARM.
   - D. MANUAL EMERGENCY SHUTDOWN.
6. PROVIDE REMOTE TEMPERATURE SETPOINT CONTROLLERS IN ROOM 122. THE CONTROLLERS SHALL INDICATE RA-TEMP AND BE ABLE TO REMOTELY ADJUST THE RETURN AIR TEMPERATURE SETPOINTS FOR AHU-1 AND AHU-2.

HEATING WATER DISTRIBUTION PUMPS CONTROL (P-1 & P-2):

1. P-1 AND P-2 ARE ASSOCIATED WITH AHU-1, AHU-2, MAU-1, AND MAU-2.
2. P-1 AND P-2 SHALL BE CONTROLLED IN A LEAD/LAG ARRANGEMENT WITH THE LEAD PUMP CHOSEN MANUALLY THROUGH THE DDC SYSTEM.
3. THE LEAD PUMP SHALL BE ENERGIZED AND OPERATE CONTINUOUSLY WHEN THE OCCUPANCY SCHEDULE FOR EITHER AHU-1 OR AHU-2 IS IN THE "OCCUPIED" MODE AND B-1 OR B-2 IS ON, OR THE LEAD PUMP SHALL BE ENERGIZED AND OPERATE CONTINUOUSLY WHEN MAU-1 OR MAU-2 IS ON, B-1 OR B-2 IS ON, AND THE OUTDOOR AIR TEMPERATURE IS BELOW 15°C (60°F, ADJUSTABLE).
4. IF WATER FLOW FOR THE LEAD PUMP IS NOT PROVEN, THE LAG PUMP SHALL START AND OPERATE CONTINUOUSLY AND AN ALARM SHALL BE ACTIVATED IN THE DDC SYSTEM INDICATING LEAD PUMP FAILURE. IF WATER FLOW FOR LAG PUMP IS NOT PROVEN, AN ALARM SHALL BE ACTIVATED IN DDC SYSTEM INDICATING LAG PUMP FAILURE.

POINT LIST - AIR HANDLING UNIT 1 & 2

PLAN DESIGNATION	POINT DESCRIPTION	POINT TYPE AO	DO	AI	DI	VP	ALARMS	NOTES
OA-TEMP	OUTDOOR AIR TEMPERATURE			X				COMMON TO ALL UNITS
OA-DMPR	OUTDOOR AIR DAMPER	X						ECONOMIZER CONTROL
RA-DMPR	RETURN AIR DAMPER	X						ECONOMIZER CONTROL
EA-DMPR	EXHAUST AIR DAMPER	X						ECONOMIZER CONTROL
FILTER-DP	FILTER DIFFERENTIAL PRESSURE			X			X	MONITOR DIFF. PRESS., ALARM ABOVE 1" W.G.
FRZ-STAT	FREEZE STATUS			X			X	ALARM SETPOINT OF 42 DEG F (ADJ)
CLG-DAT	COOLING COIL DISHARGE AIR TEMPERATURE			X				
CC-ACV	COOLING COIL AUTOMATIC CONTROL VALVE							
HC-ACV	HEATING COIL AUTOMATIC CONTROL VALVE							
RA-HUMD	RETURN AIR HUMIDITY			X				MONITOR
RA-TEMP	RETURN AIR TEMPERATURE			X				
SF-SS	SUPPLY FAN START/STOP		X					
SF-STATUS	SUPPLY FAN STATUS				X			VERIFY SUPPLY FAN OPERATION
RF-SS	RETURN FAN START/STOP		X					
RF-STATUS	RETURN FAN STATUS				X			VERIFY RETURN FAN OPERATION
CLG-SPT	COOLING DISCHARGE AIR SETPOINT					X		OWNER ADJUSTABLE
RA-SPT	RETURN AIR TEMPERATURE SETPOINT					X		OWNER ADJUSTABLE
ECON-SP	ECONOMIZER SETPOINT					X		OWNER ADJUSTABLE

NOTES:
1. PROVIDE AHU-1 WATER COOLING COIL WITH A THREE-WAY AUTOMATIC CONTROL VALVE AND AHU-2 WATER COOLING COIL WITH A TWO-WAY ACV.

0 2000 4000 10000
SCALE: 1:100

US Army Corps of Engineers
New York District

Mark	Description	Date	Appr.	Mark	Description	Date	Appr.

U.S. ARMY ENGINEER DISTRICT
CORPS OF ENGINEERS
NEW YORK, NEW YORK

Designed by: | Date: | Scale/Sheet no.:
Dwn by: | Ckd by: | Solicitation no.:
Reviewed by: | Contract no.:
Submitted by: | Plot date: 04-AUG-2005 12:07 | Plot by: e3endem3 | Scale: 1:200/0/1/00000 | Contract number:

File name: S:\filer-oom\military\Fort Drum\ForceMOD\Mechanical\100% Submittal\ForceMOD57708_MH-701xxx.dgn

FORCE MODERNIZATION EDUCATION (TRANSITIONAL FACILITY)
FORT DRUM, NEW YORK
PN 57708

CONTROLS AIR HANDLING UNIT FLOW DIAGRAM SHEET 2

Sheet reference number:
M-701

Submitted by: e3endem3
S:\filer-oom\military\Fort Drum\ForceMOD\Mechanical\100% Submittal\ForceMOD57708_MH-701xxx.dgn
Plot Date: 04-AUG-2005 12:07

SUBMITTED BY: E3ENDSVC PLOT DATE: 09-AUG-2005 15:12
S:\FILEROOM\MILITARY\FORT DRUM\FORCEMOD\ELECTRICAL\90%SUBMITTAL\SHEETFILES\FORCEMOD57708_E-001XXX.DGN

EXTERIOR ELECTRICAL LEGEND (FOR DWG E-401)

Symbol	Description
	EXISTING POWER POLE
UP	UNDERGROUND PRIMARY FEEDER DUCT BANK
UC	UNDERGROUND COMMUNICATION DUCT BANK
	LIGHTING POLE FIXTURE
—X—X—X—X—X—	FENCE
G	COUNTERPOISE: 120MM2 BARE COPPER
MH-1 MC-1	ELECTRICAL/COMMUNICATIONS MANHOLE, SEE DETAIL ON DWG E-503 MH-1 FOR POWER MC-1 FOR COMMUNICATION

INTERIOR ELECTRICAL LEGEND

Symbol	Description
A, A a, A a	300x1200MM OR 600x1200MM FLUORESCENT LIGHTING FIXTURE PROVIDE JUNCTION BOX AND 1200MM TO 1800MM LONG FLEXIBLE METALLIC CONDUIT WITH 3 -4MM2 THWN/THHN CONDUCTORS FOR ALL FIXTURES (THOUGH NOT SHOWN ON DRAWINGS) LETTER "a" DENOTES CONTROL, NUMBER DENOTES CIRCUIT DESIGNATION LETTER "A" DENOTES LIGHTING FIXTURE TYPE
NL NL	EMERGENCY LIGHT FIXTURE WITH TYPE 200 BATTERY BACK UP 'NL' DENOTES NIGHT LIGHT, UNSWITCHED POWER
	FLUORESCENT DOWNLIGHT FIXTURE U. O. N.
	FLUORESCENT DOWNLIGHT FIXTURE WITH EMERGENCY BATTTERY UNIT
J	JUNCTION BOX OR OUTLET BOX - RECESSED OR SURFACE, WALL OR CEILING-MOUNTED
	EXIT LIGHTS (WITH ARROWS WHERE INDICATED) DARKENED PORTION INDICATES FACESIDE. EMERGENCY BATTERY TYPE. BRACKET INDICATES WALL MOUNTED TYPE
S_a	SINGLE POLE SWITCH 1200MM AFF.; "a" INDICATES SWITCH IS CONTROLLING DEVICE NOTED BY "a"
S_D	DIMMER SWITCH 1200MM AFF (T.O.D.)
S_{D_3}	3-WAY DIMMER SWITCH 1200MM AFF (T.O.D.)
S_3	THREE-WAY SWITCH, 1200MM AFF (T.O.D.)
S_4	4-WAY SWITCH 1200MM AFF T.O.D. (U.O.N.)
S_p	LIGHT SWITCH WITH PILOT LIGHT, 1200MM AFF (T.O.D.)
S_M	WALL MOUNTED PASSIVE INFRARED OCCPANCY SENSOR, 1200MM AFF (T.O.D.)
U	CEILING MOUNTED ULTRASONIC OCCUPANCY SENSOR
D	DUPLEX CONVEN. RECEP, GROUNDING TYPE, 450MM AFF (B.O.D.), NEMA 5-20R, (U.O.N.) D INDICATES DEDICATED RECEPTACLE
IG	DUPLEX RECEPTACLE, NEMA 5-20R, WITH ISOLATED GROUND AND SURGE SUPPRESSION, 450MM AFF B.O.D. (U.O.N)
	TWO(2) DUPLEX RECPEP (NEMA 5-20R) IN TWO GANG WALL BOX, 450MM AFF B.O.D. (U.O.N.)
	DUPLEX RECEPTACLE, GROUNDING TYPE, NEMA 5-20R, FLOOR MOUNT
GFI	DUPLEX RECEPTACLE, NEMA 5-20R, WITH GROUND FAULT CIRCUIT INTERRUPTER
	SINGLE CONVEN. RECEP, GROUNDING TYPE, 450MM AFF, 5-20R, (U.O.N.)
	COMBINATION MOTOR STARTER-DISCONNECT HORSEPOWER RATED (HAND-OFF-AUTO SW)
	DISCONNECT SWITCH, UNFUSED (U.O.N.) HORSEPOWER RATED, 1350MM AFF (U.O.N.)
	MOTOR WITH DISCONNECT SWITCH APPROX. H.P. INDICATED
	SURFACE MOUNTED PANELBOARD & CABINET
FACE	FLUSH MOUNTED PANELBOARD & CABINET
	3 PUSH BUTTON STATION (FOR OVERHEAD DOOR)
BMS	BALANCE MAGNETIC SWITCH INSTALLED ON DOORS (CONCEALED)
MS	MOTION SENSOR
SK	SECURITY KEYPAD WITH CARD READER
CCTV	CLOSED-CIRCUIT TELEVISION CAMERA
A	ALARM STROBE LIGHT AND HORN (FOR ARMS VAULT SECURITY SYSTEM)
T	TRANSFORMER
	TRANSFORMER CONNECTION DELTA / GROUNDED WYE
	GROUND ROD / CONNECTION, 21 MM DIAMETER, 3.05M LONG
TVSS	TRANSIENT VOLTAGE SURGE SUPPRESSOR
S	SOUND SYSTEM SPEAKER WITH GRILL, CEILING MOUNTED
L A	LIGHTNING ARRESTER WITH GROUND ROD / CONNECTION
G	GROUND BUS
1	MOTOR, NUMBER DESIGNATES HORSEPOWER
	CABLE TRAY, 305MM WIDE X 103MM HIGH
LC	LIGHTING CONTACTOR
PC	PHOTOELECTRIC CELL
M P	MICROPHONE, CEILING MOUNTED 'P' DENOTES PODIUM MOUNTED.

INTERIOR ELECTRICAL LEGEND CON'T

Symbol	Description
LPA-1	HOMERUN TO PANEL CIRCUIT BREAKER. PANEL AND CIRCUIT BREAKER DESIGNATIONS AS INDICATED. HOMERUN TO BE 2-4MM2, 1-4MM2(G)-21MMC UNLESS OTHERWISE NOTED.
PM	DIGITAL POWER METER, DIGITAL R/O TO EMCS PULSE INITIATOR
100 AT / 100 AF	CIRCUIT BREAKER "AT" DENOTES AMPERE TRIP, "AF" DENOTES AMPERE FRAME
1	HOUSE TELEPHONE OUTLET (1 JACK), 450MM AFF, UON. (1) CAT. 6E CABLE IN 27MM2 C RUN CONCEALED IN DRYWALL AND/OR HUNG CEILING TO COMM. ROOM VIA CABLE TRAY.
	TELEPHONE OUTLET (2 JACKS) (2) CAT. 6E CABLE IN 27MM2 C RUN CONCEALED IN DRYWALL AND/OR HUNG CEILING TO COMM. ROOM VIA CABLE TRAY.
1/1	TEL / DATA OUTLET CONSISTING OF ONE (1) TEL JACK AND ONE (1) DATA JACK (2) CAT. 6E CABLE IN 27MM2 C RUN CONCEALED IN DRYWALL AND/OR HUNG CEILING TO COMM. ROOM VIA CABLE TRAY.
	DATA OUTLET (2 JACKS) (2) CAT. 6E CABLE IN 27MM2 C RUN CONCEALED IN DRYWALL AND/OR HUNG CEILING TO COMM. ROOM VIA CABLE TRAY.
	POWER / TEL / DATA FLOOR BOX, CONSISTING OF ONE DUPLEX POWER OUTLET, ONE (1) TEL JACK AND ONE (1) DATA JACK. PROVIDE POWER WIRING AND COMM. CABLES AS INDICATED.
	POWER / DATA FLOOR BOX, CONSISTING OF ONE (1) DUPLEX POWER OUTLET, AND TWO (2) DATA JACKS. PROVIDE POWER WIRING AND COMM. CABLES AS INDICATED.
—GL—	CLASS I COPPER LIGHTNING CONDUCTOR (84.8 KG PER 305 METERS) - SECURE TO BUILDING AT 915 MM INTERVALS.
	21MM X 3.05M COPPER CLAD STEEL GROUND ROD
	GROUND TEST WELL
	10mm x 457mm SOLID COPPER AIR TERMINAL WITH COPPER BASE
2/2	QUAD COMMUNICATIONS OUTLET, WITH 2 VOICE AND 2 DATA JACKS. (4) CAT 6E CABLES IN 27MM2 RUN CONCEALED IN DRYWALL AND/OR HUNG CEILING TO COMM. ROOM VIA CABLE TRAY.
T	THERMOSTAT

ABBREVIATIONS

AFF	ABOVE FINISHED FLOOR
AFG	ABOVE FINISHED GRADE
AIC	AMPERES INTERRUPTING CAPACITY (SYMMETRICAL)
BFG	BELOW FINISHED GRADE
B.O.D.	BOTTOM OF DEVICE
C	CONDUIT
C.O.D.	CENTER OF DEVICE
COMM	COMMUNICATIONS
CONT	CONTINUATION
CT	CURRENT TRANSFORMER
DWG	DRAWING
EF	EXHAUST FAN
EWC	ELECTRIC WATER COOLER
EXP	EXPLOSION PROOF
FACP	FIRE ALARM CONTROL PANEL
G, GND, GRD	GROUND
GFI	GROUND FAULT INTERRUPTER
HP	HORSEPOWER
IG	ISOLATED GROUND
KCM, KCMIL	THOUSAND CIRCULAR MILS
LTG	LIGHTING
NEC	NATIONAL ELECTRICAL CODE
NEMA	NATIONAL ELECTRICAL MANUFACTURER'S ASSOCIATION
NIC	NOT IN CONTRACT
NTS	NOT TO SCALE
PA	PUBLIC ADDRESS
RECEP	RECEPTACLE
RGS	RIGID GALVANIZED STEEL CONDUIT
SHT	SHEET NUMBER
T.O.D.	TOP OF DEVICE
TMGB	TELECOMMUNICATION MASTER GROUND BAR
TYP	TYPICAL
UG	UNDERGROUND
UON/U.O.N.	UNLESS OTHERWISE NOTED
WP	WEATHER PROOF
TGB	TELECOMMUNICATION GROUND BUS

NEMA APPROVED ELECTRICAL CONDUIT CONVERSION TABLE

INCHES	MILLIMETERS	INCHES	MILLIMETERS
1/2	16	2-1/2	63
3/4	21	3	78
1	27	3-1/2	91
1-1/4	35	4	103
1-1/2	41	5	129
2	53	6	155

METRIC CONDUCTOR CONVERSION TABLE

AWG	mm^2	AWG	mm^2	KCM	mm^2
18	1.0	4	25	300	150
16	1.5	2	35	350	185
14	2.5	1/0	50	500	240
12	4	2/0	70	600	300
10	6	3/0	95	800	400
8	10	250	120	1000	500
6	16				

GENERAL NOTES

1. WHERE RIGID STEEL CONDUIT IS SPECIFIED IT SHALL BE ONLY HEAVY WALL RIGID GALVANIZED STEEL TYPE. (INTERMEDIATE METAL CONDUIT SHALL NOT BE PERMITTED WHERE GRS IS SPECIFIED). UNDERGROUND PVC CONDUIT SHALL BE ENCASED IN CONCRETE WITH SPARES.
2. WHERE IMC IS SPECIFIED EITHER RIGID GALVANIZED STEEL OR INTERMEDIATE METAL CONDUIT MAY BE USED.
3. ALL JUNCTION AND OUTLET BOXES INSTALLED OUTDOORS SHALL BE OF THE CAST THREADED HUB TYPE, NON-ALUMINUM.
4. CONDUIT SIZES SHOWN ARE MINIMUM AND ARE BASED ON THWN/THHN WIRING, IF OTHER TYPE WIRING IS USED, THE CONDUIT SIZES SHALL BE INCREASED TO PROVIDE MAX. (40%) PERCENT CONDUIT FILL AS PER NEC, AT NO ADDITIONAL COST TO THE GOVERNMENT.
5. GROUND ALL EXPOSED BUILDING STEELS USING 95mm2 COPPER CONDUCTOR, BOND STEEL ACROSS ALL SEISMIC JOINTS AND EXPANSION JOINTS USING COPPER CONDUCTOR AND WHERE REQUIRED TO MAINTAIN CONTINUITY FOR THOSE AREAS WHERE BUILDING STEEL IS EXPOSED.
6. ALL SWITCHES CONTROLLING MOTORS OR NON-LOCAL LIGHTING SHALL BE LABELED AS TO FUNCTION.
7. WHERE KEY OPERATED SWITCHES ARE SPECIFIED ALL KEYS MUST BE LABELED AND DELIVERED TO THE CONTRACTING OFFICER.
8. ALL DEVICES SHALL BE SELF GROUNDING TYPE, OR AN APPROPRIATE GROUND JUMPER SIZED PER NEC TABLE 250-95, SHALL BE INSTALLED.
9. USE DUCT SEAL AROUND CONDUCTORS WHERE CONDUITS ENTER AND LEAVE THE BUILDING.
10. RECESSED FLUORESCENT FIXTURES SHALL BE BOLTED INDEPENDENTLY SUPPORTED, SEE SPECIFICATIONS.
11. ALL FIXTURES & EQUIPMENT SHALL BE ADEQUATELY ANCHORED FOR SEISMIC ZONE 2A.
12. FIXTURE PROTECTION FOR RECESSED FLUORESCENT FIXTURES IN FIRE-RATE CEILING SHALL BE IN ACCORDANCE WITH REGULATIONS OF UNDERWRITERS LABORATORIES FOR CEILING SYSTEM INDICATED. BALLASTS SHALL BE EXTRA COOL RUNNING TYPE APPROVE FOR THE INTENDED APPLICATION. SHOP DRAWINGS MUST BE SUBMITTED FOR APPROVAL FOR FIXTURE PROTECTION TOGETHER WITH THE LIGHTING FIXTURES. INDICATING THE TYPE OF BALLAST.
13. IN ADDITION TO AREAS INDICATED. ALL CORRIDOR WALLS ARE FIRE RATED. ALL PENETRATIONS OF CONDUITS THROUGH FIRE RATED WALLS OR CEILINGS MUST BE SEAL AROUND CONDUIT SO AS TO RESTORE ORIGINAL FIRE RATING OF WALLS OR CEILINGS. APPROVED FIRE-RATED FITTINGS SHALL BE USED. SEE ARCHITECTURAL SHEET FOR EXACT LOCATIONS AND RATING OF FIRE-RATED WALLS AND CEILINGS
14. THE AVAILABLE SHORT CIRCUIT CURRENTS INDICATED ON ELECTRICAL PLAN ARE BASE ON TRANSFORMER IMPEDANCE AS INDICATED. IF A LOWER IMPEDANCE TRANSFORMER IS FINISHED THE CONTRACTOR SHALL CALCULATE THE AVAILABLE SHORT CIRCUIT CURRENT IN COORDINATING AND PROVIDING ALL PROTECTIVE DEVICES AT NO ADDITIONAL COST TO THE GOVERNMENT.
15. VEHICLE PROCESSING ROOM (107) AND VEHICLE CLASSROOMS (106 & 106A) SHALL BE RATED AS CLASS 1, DIVISION 2 HAZARDOUS AREAS FROM THE FLOOR UP TO 18" ABOVE FINISH FLOOR. ALL ELECTRICAL EQUIPMENT / DEVICES CONDUIT & WIRES LOCATED IN THESE CLASSIFIED AREAS SHALL CONFORM TO THE NATIONAL ELECTRICAL CODE, ARTICLE 501 REQUIREMENTS.
16. IN HAZARDOUS LOCATIONS THE ELECTRICAL INSULATION SHALL COMPLY WITH THE APPROPRIATE ARTICLES OF THE NEC AND ALSO THE FOLLOWING:
    A. USE ONLY RIGID STEEL OR IMC CONDUIT WITH 21 MM THREAD TAPER PER FOOT
    B. BOXES, FITTINGS AND JOINTS SHALL BE THREADED AND EXPLOSION-PROOF WITH AT LEAST FIVE FULLY ENGAGED THREADS
    C. CONDUIT SEALS SHALL BE USED AT EACH ARC-PRODUCING DEVICE AT ALL HAZARDOUS LOCATION BOUNDARIES
    D. USE CONDUIT SEALS ON CONDUITS PASSING FROM HAZARDOUS TO NON-HAZARDOUS AREAS
17. PROVIDE THE NUMBER OF WIRES FOR LIGHTING, POWER AND CONTROL CIRCUITING AS SHOWN ON PLANS AND / OR AS REQUIRED. ALL CIRCUITS (LIGHTING, RECEPTACLE, ETC.) SHALL HAVE A SEPARATE GROUND CONDUCTOR. ALL RECEPTACLE CIRCUITS SHALL BE PROVIDED WITH A DEDICATED NEUTRAL. SHARING OF NUETRALS WILL NOT BE PERMITTED.
18. CONTROL/POWER WIRING REQUIRED BUT NOT SHOWN FOR AND NOT LIMITED TO THERMOSTATS, CONTROLLERS, VARIABLE FREQUENCY DRIVE CONTROLS, EQUIPMENT MANUFACTURER CONTROL PANELS, DAMPER MOTORS, VARIABLE VOLUME CONTROLS AND MOTORS, VALVES, SMOKE DAMPERS, SENSING DEVICES (TEMPERATURE, PRESSURE, HUMIDITY, LEVEL, FLOW, VOLUME, ON-OFF, FIRE ALARM DEVICES) SHALL BE SUPPLIED AND INSTALLED TO PROVIDE A COMPLETE AND USABLE FACILITY AS SPECIFIED.
19. IN VEHICLE PROCESSING ROOM, VEHICLE CLASSROOM AND WAREHOUSE AREA, RIGID GALVANIZED STEEL CONDUIT SHALL BE USED WHEN EXPOSED FROM FLOOR UP TO 12' ABOVE FINISHED FLOOR, EMT MAY BE USED FOR REMAINING AREAS AS ALLOWED BY NATIONAL ELECTRICAL CODE
20. CONDUIT PENETRATIONS THROUGH FIRE RATED WALLS, PARTITIONS AND/OR CEILINGS SHALL BE PROVIDED WITH APPROVED FITTINGS AND FIRE RETARDANT SEALANTS.
21. EACH LIGHTING AND RECEPTACLE OUTLET CIRCUIT SHALL BE PROVIDED WITH A DEDICATED GROUND AND NEUTRAL CONDUCTOR. ADDITIONALLY, ISOLATED GROUND RECEPTACLE CIRCUITS (INCLUDED THE PRE-WIRED WORK STATIONS) SHALL BE PROVIDED WITH AN ISOLATED GROUND CONDUCTOR.
22. WORK SHALL BE ACCOMPLISHED IN ACCORDANCE WITH THE LATEST EDITION OF THE NEC, NFPA, OSHA, GOVERNING FEDERAL, STATE, AND LOCAL INSTRUCTIONS/REGULATIONS.
23. ELECTRICAL CONTRACTOR SHALL INSTALL MECHANICAL CONTRACTOR FURNISHED MECHANICAL EQUIPMENT STARTERS, VFDs, CONTROLLERS, METERING, SAFETY SWITCHES AND/OR DISCONNECT SWITCHES.
24. DRAWINGS ARE DIAGRAMATIC AND DO NOT SHOW OFFSETS, BENDS, ELBOWS, JBs, TROUGHS, PULL BOXES AND OTHER REQUIRED EQUIPMENT/HARDWARE FOR THE PROPER AND COMPLETE INSTALLATION OF WORK. CONTRACTOR SHALL PROVIDE ALL THE NECESSARY MATERIALS FOR A COMPLETE ELECTRICAL SYSTEM TO FULFILL THE INTENTION OF THE PROJECT.
25. PENETRATIONS OF FIRE-RATED PARTITIONS, WALL OR FLOORS BY DATA AND COMMUNICATION WIRING OR CABLE SHALL BE THROUGH MODULAR, RE-ENTERABLE FIRESTOPPING DEVICE(S) CONTAINING SELF-SEALING INTUMESCENT INSERTS PER SPECIFICATION SECTION 07840.

US Army Corps of Engineers
New York District

Mark | Date | Description | Appr.

U.S. ARMY ENGINEER DISTRICT
CORPS OF ENGINEERS
NEW YORK, NEW YORK

Designed by: | Date: | Size: A1
Dwn by: | Ckd by: | Solicitation no.:
Reviewed by: | Contract no.:
Submitted by: | Plot date: 09-AUG-2005 15:12 Plot by: e3endsvc Scale: 1.000000:1.000000
File name: S:\fileroom\military\Fort Drum\ForceMOD\Electrical\90%SUBMITTAL\Sheetfiles\ForceMod57708_E-001xxx.dgn

PN 57708
FORCE MODERNIZATION EDUCATION /TRANSITIONAL FACILITY
FORT DRUM, NEW YORK

ELECTRICAL LEGEND ABBREVIATIONS & GENERAL NOTES

Sheet reference number:
E-001

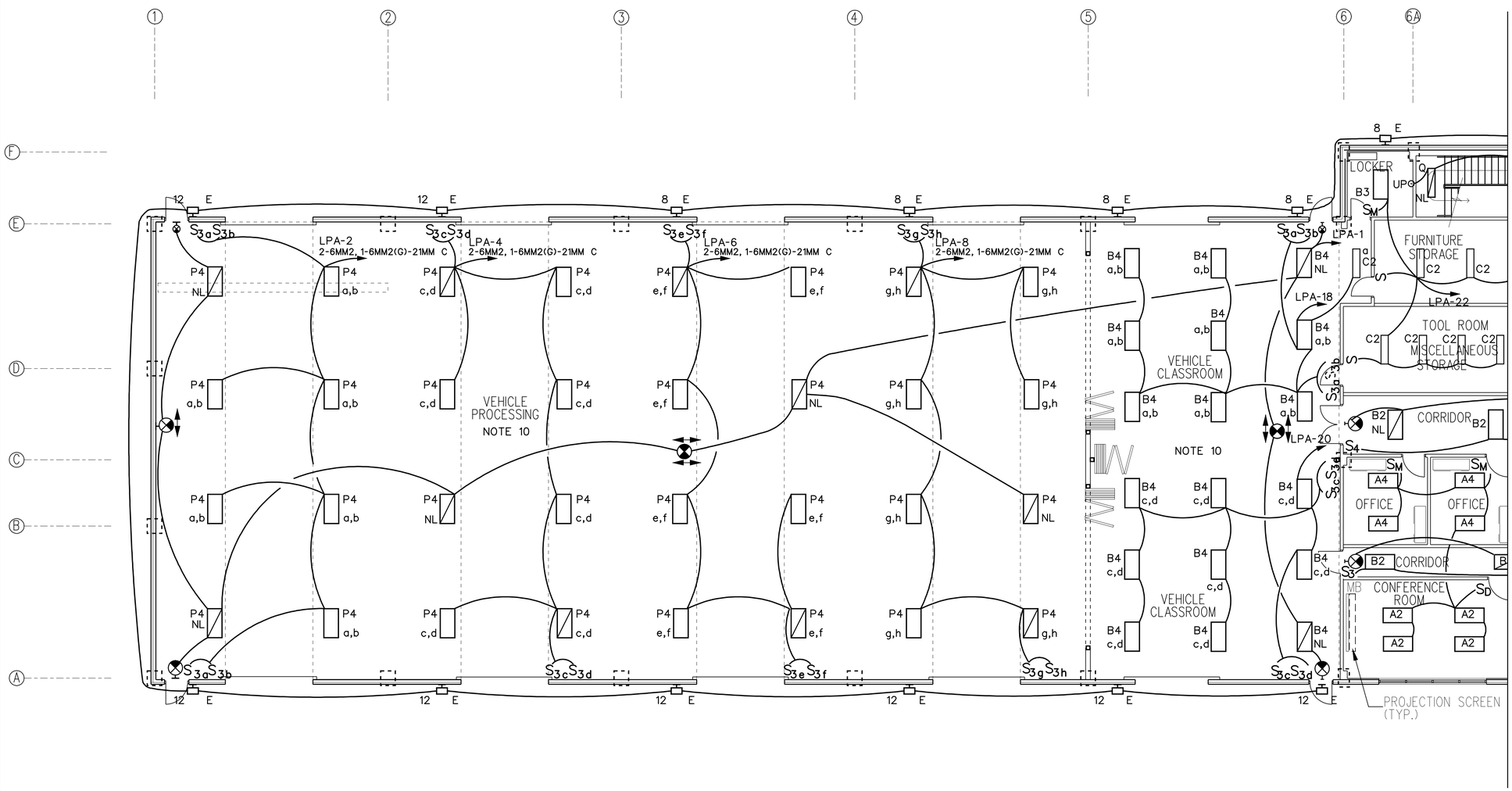

FIRST FLOOR PLAN – LIGHTING I

NOTES:

1. FOR GENERAL NOTES, SYMBOL LIST, SEE DWG. E–001
2. FOR LIGHTING FIXTURE DETAILS AND SCHEDULE, SEE DWG. E–606 & E–607
3. HOME RUN CONDUCTORS FOR INDOOR LIGHTING CIRCUIT SHALL BE 2–4MM2, 1–4MM2(G), 21MM C. UNLESS OTHERWISE NOTED.
4. CEILING MOUNTED LUMINAIRES SHALL BE COMPATIBLE WITH THE TYPE OF CEILING SYSTEM IN THE AREA SERVED.
5. INDOOR FLUORESCENT LIGHTING FIXTURES PROVIDED WITH EMERGENCY INVERTOR BALLAST(S) SHALL BE CONNECTED FOR SWITCHED OPERATION UNLESS OTHERWISE NOTED.
6. LIGHTING FIXTURE(S) DESIGNATED AS NIGHT–LITES (N.L.) SHALL BE CONNECTED ALONG WITH EXIT LIGHTS ON 24 HOURS CIRCUITS.
7. FOR LOCATION OF PANEL LP–A, SEE DWG E–102.
8. PROVIDE UNSWITCHED CIRCUIT(S) FOR EXIT SIGNS AND NIGHT LIGHTING FIXTURES.
9. FOR EXTERIOR LIGHTING CONTROL WIRING DIAGRAM, SEE DWG. E–501.
10. FOR FLUORESCENT LIGHTING FIXTURES IN AREAS WHERE DUAL SWITCHING ARE PROVIDED:
    A. PROVIDE TWO BALLASTS FOR EACH LIGHTING FIXTURE; ONE BALLAST FOR TWO INSIDE LAMPS, THE OTHER BALLAST FOR TWO OUTSIDE LAMPS.
    B. ALL INSIDE LAMPS ARE CONNECTED TOGETHER AND CONTROLLED BY ONE LIGHT SWITCH; ALL OUTSIDE LAMPS ARE CONNECTED TOGETHER AND CONTROLLED BY THE OTHER LIGHT SWITCH.

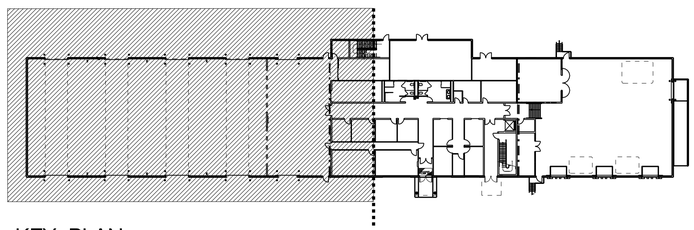

KEY PLAN

SCALE: 1:500

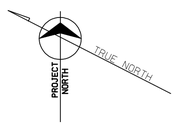

SCALE: 1:100

0 2000 4000 10000

ALL DIMENSIONS ARE IN MILLIMETERS
EXCEPTED AS NOTED

US Army Corps of Engineers
New York District

U.S. ARMY ENGINEER DISTRICT
CORPS OF ENGINEERS
NEW YORK, NEW YORK

Designed by: | Date: | Size: A1
Dwn by: | Ckd by: | Solicitation no.:
Reviewed by: | Contract no.:
Submitted by: | Plot date: 09-AUG-2005 16:12 | Plot by: | Scale: 1:00000/1:00000

FIELD OFFICE
FORCE MODERNIZATION
FORT DRUM, NEW YORK

FIRST FLOOR PLAN
– LIGHTING I

Sheet reference number:
E–101

SUBMITTED BY: E3ENDSVC
S:\FILEROOM\MILITARY\FORT DRUM\FORCEMOD\ELECTRICAL\90%SUBMITTAL\SHEETFILES\FORCEMOD57708_E-101XXX.DGN
PLOT DATE: 09-AUG-2005 15:12

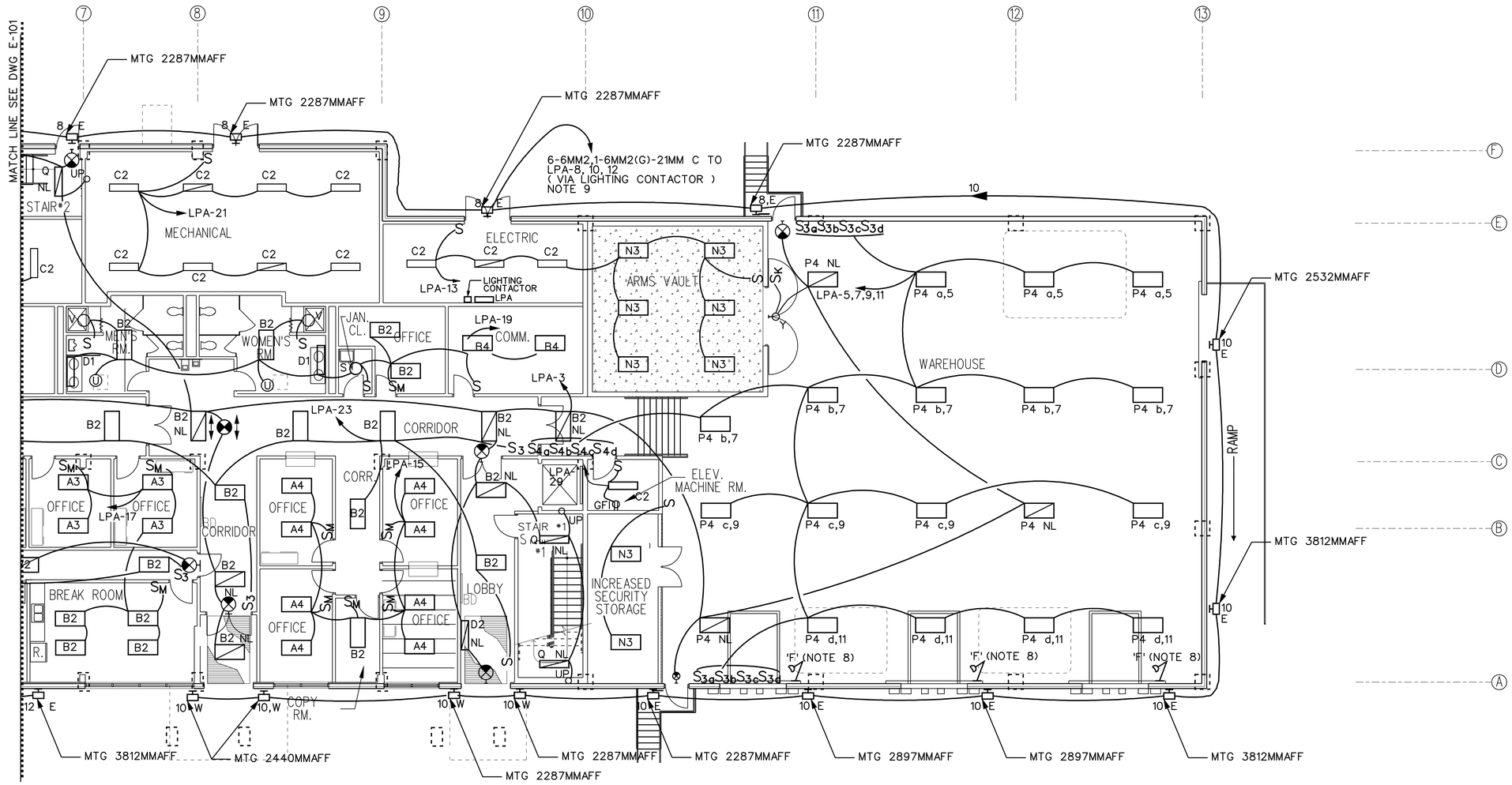

FIRST FLOOR PLAN – LIGHTING II

NOTES:

1. FOR GENERAL NOTES, SYMBOL LIST, SEE DWG. E–001
2. FOR LIGHTING FIXTURE DETAILS AND SCHEDULE, SEE DWG. E–606 & E–607
3. HOME RUN CONDUCTORS FOR INDOOR LIGHTING CIRCUIT SHALL BE 2–4MM2, 1–4MM2(G), 21MM C. UNLESS OTHERWISE NOTED.
4. CEILING MOUNTED LUMINAIRES SHALL BE COMPATIBLE WITH THE TYPE OF CEILING SYSTEM IN THE AREA SERVED.
5. INDOOR FLUORESCENT LIGHTING FIXTURES PROVIDED WITH EMERGENCY INVERTOR BALLAST(S) SHALL BE CONNECTED FOR SWITCHED OPERATION UNLESS OTHERWISE NOTED.
6. LIGHTING FIXTURE(S) DESIGNATED AS NIGHT–LITES (N.L.) SHALL BE CONNECTED ALONG WITH EXIT LIGHTS ON 24 HOURS CIRCUITS.
7. PROVIDE UNSWITCHED CIRCUIT(S) FOR EXIT SIGNS AND NIGHT LIGHTING FIXTURES.
8. PROVIDE DOCK LIGHTS IN WAREHOUSE AS INDICATED. DOCK LIGHTS TO BE PROVIDED WITH CORD AND PLUG AND TO PLUG INTO THE RECEPTACLES AS INDICATED ON DWG E–105.
9. FOR EXTERIOR LIGHTING CONTROL WIRING DIAGRAM, SEE DWG E–501.

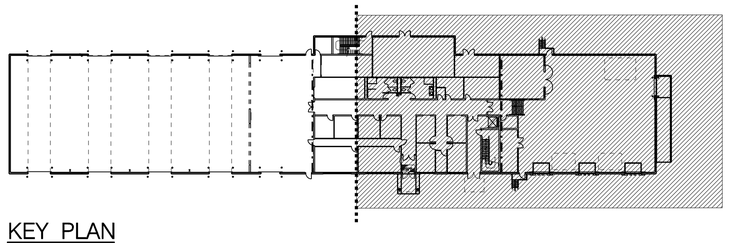

KEY PLAN

SCALE: 1:500

TRUE NORTH

PROJECT NORTH

SCALE: 1:100

0 2000 4000 10000

ALL DIMENSIONS ARE IN MILLIMETERS EXCEPTED AS NOTED

US Army Corps of Engineers New York District

US ARMY ENGINEER DISTRICT WORK FOR REIMBURSEMENT NEW YORK, NEW YORK

Designed by: Date: Size: A1
Dwn by: Ckd by: Solicitation no:
Reviewed by: Contract no:
Submitted by: Rev date: 09-AUG-2005 15:12 Rev by: dlunsford Scale: 1:00000/1:00000
File name: S:\FILEROOM\MILITARY\FORT DRUM\FORCEMOD\ELECTRICAL\90%SUBMITTAL\SHEETFILES\FORCEMOD57708_E-102XXX.DGN

FORCE MODERNIZATION FEY2005/06 (TRANSITIONAL FACILITY) FORT DRUM, NEW YORK

PN 57708

FIRST FLOOR PLAN – LIGHTING II

Sheet reference number: E–102

PLOT DATE: 09-AUG-2005 15:12

SUBMITTED BY: E3ENDSVC

S:\FILEROOM\MILITARY\FORT DRUM\FORCEMOD\ELECTRICAL\90%SUBMITTAL\SHEETFILES\FORCEMOD57708_E-102XXX.DGN

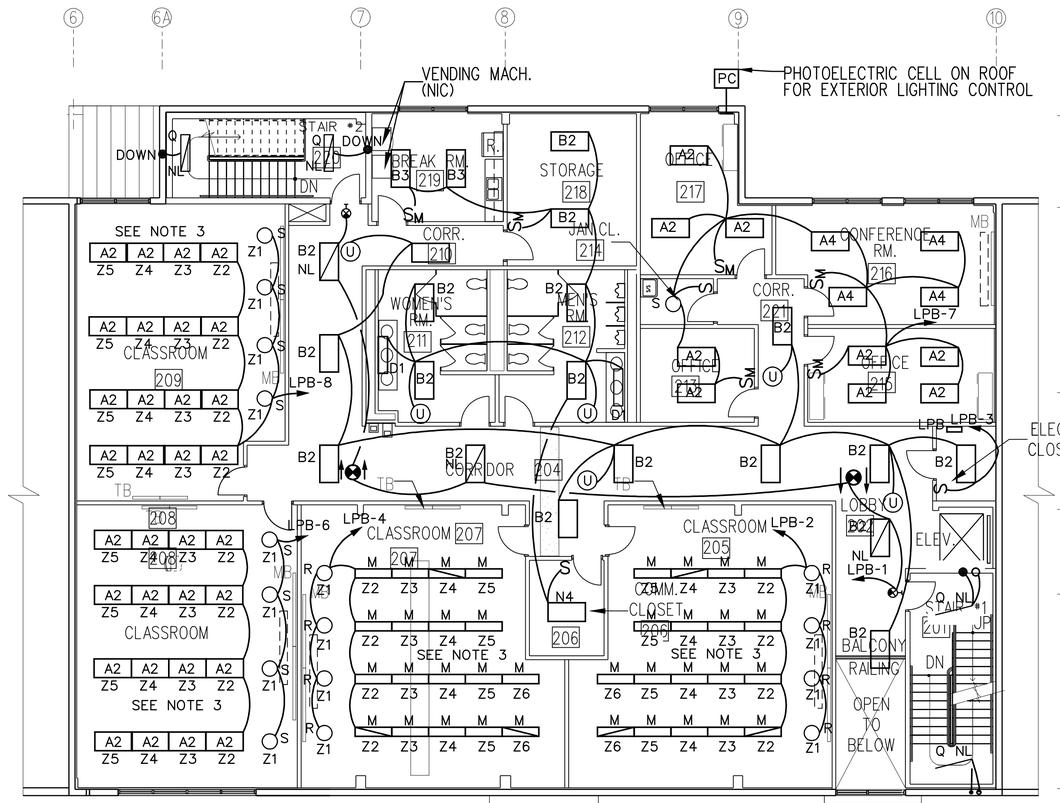

SECOND FLOOR PLAN – LIGHTING

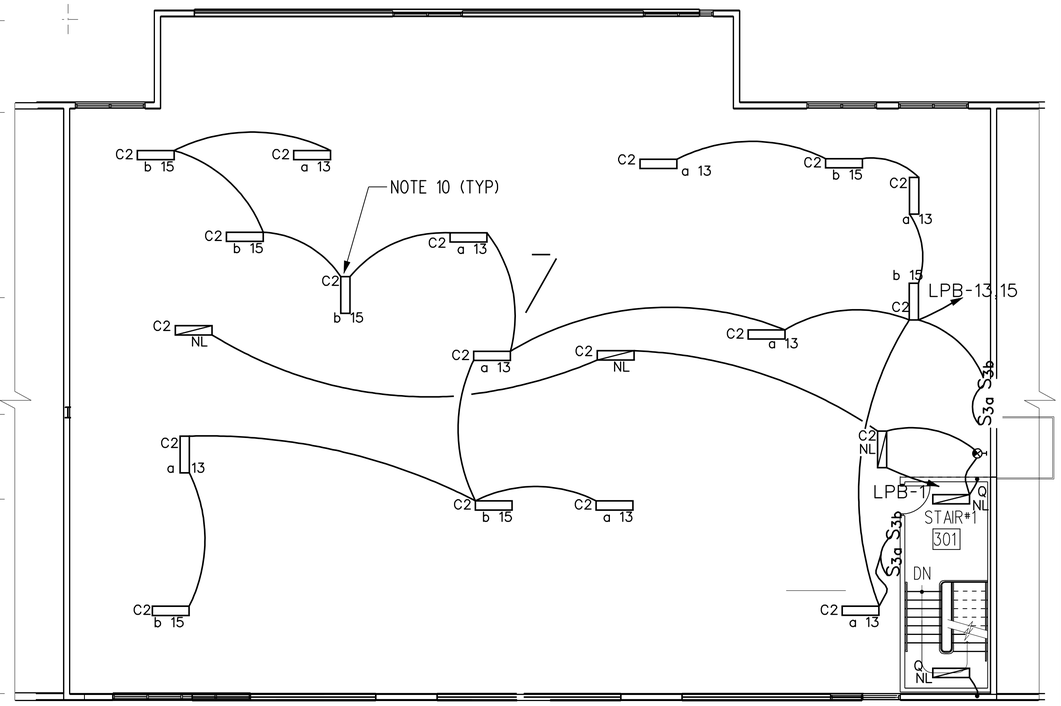

ATTIC FLOOR PLAN – LIGHTING

NOTES:

1. FOR GENERAL NOTES, SYMBOL LIST, SEE DWG. E–001
2. FOR LIGHTING FIXTURE DETAILS AND SCHEDULE, SEE DWG. E–606 & E–607
3. PROVIDE DIMING MODULE CONTROLLERS FOR 6 ZONES, WALL MOUNTED LOCATED NEAR THE INSTRUCTOR'S DESK IN CLASSEOOMS 205, 207, 208 & 209; (SIMILAR TO LUTRON GRAFIK EYE 3000 SERIES) AND ONE ZONE REMOTE CONTROLLERS (SIMILAR TO LUTRON GRAFIK EYE LOW VOLTAGE TWO–BUTTON ENTRANCE CONTROL) LOCATED AT ENTRANCE DOOR. ENSURE COORDINATION OF DIMMERS, DIMMING BALLAST AND LAMP TYPE WITH MANUFACTURER.
4. HOME RUN CONDUCTORS FOR INDOOR LIGHTING CIRCUIT SHALL BE 2–4MM2, 1–4MM2(G), 21MM C. UNLESS OTHERWISE NOTED.
5. CEILING MOUNTED LUMINAIRES SHALL BE COMPATIBLE WITH THE TYPE OF CEILING SYSTEM IN THE AREA SERVED.
6. INDOOR FLUORESCENT LIGHTING FIXTURES PROVIDED WITH EMERGENCY INVERTOR BALLAST(S) SHALL BE CONNECTED FOR SWITCHED OPERATION UNLESS OTHERWISE NOTED.
7. LIGHTING FIXTURE(S) DESIGNATED AS NIGHT–LITES (N.L.) SHALL BE CONNECTED ALONG WITH EXIT LIGHTS ON 24 HOURS CIRCUITS.
8. COORDINATE MOUNTING OF LIGHTING FIXTURES IN ATTIC FLOOR WITH MECHANICAL EQUIPMENT. MINIMUM MOUNTING HEIGHT AT 2150MM AFF, AND MAXIMUM MOUNTING HEIGHT AT 2600 MM AFF.
9. PROVIDED UNSWITCHED CIRCUIT(S) FOR EXIT SIGNS AND NIGHT LIGHTING FIXTURES.
10. COORDINATE MOUNTING OF LIGHTING FIXTURES WITH MECHANICAL EQUIPMENT. MINIMUM MOUNTING HEIGHT AT 2150 MM AND MAXIMUM MOUNTING HEIGHT AT 2600 MM ABOVE FINISHED FLOOR.

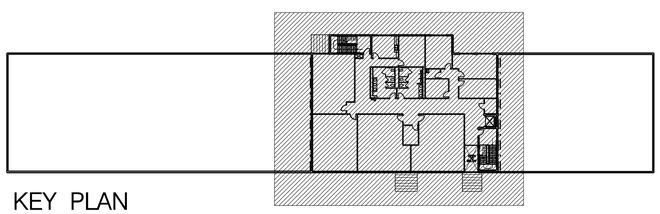

KEY PLAN
SCALE: 1:500

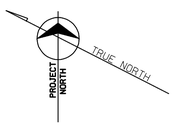

SCALE: 1:100
0 2000 4000 10000
ALL DIMENSIONS ARE IN MILLIMETERS EXCEPTED AS NOTED

US Army Corps of Engineers
New York District

U.S. ARMY ENGINEER DISTRICT
CORPS OF ENGINEERS
NEW YORK, NEW YORK

Designed by: | Date: | Size: A1
Dwn by: | Ckd by: | Solicitation no.:
Reviewed by: | Contract no.:
Submitted by: | Plot date: 09-AUG-2005 15:12 | Plot by: | Scale: 1:200/1:100/XXXX
File name: S:\fileroom\military\Fort Drum\Forcemod\Electrical\90%submittal\Sheetfiles\forcemod57708_e-103xxx.dgn

FN 57708
FORCE MODERNIZATION, DEVELOPMENT /TRANSITIONAL FACILITY
FORT DRUM, NEW YORK

SECOND FLOOR PLAN & ATTIC FLOOR PLAN – LIGHTING

Sheet reference number:
E–103

SUBMITTED BY: E3ENDSVC
S:\FILEROOM\MILITARY\FORT DRUM\FORCEMOD\ELECTRICAL\90%SUBMITTAL\SHEETFILES\FORCEMOD57708_E-103XXX.DGN
PLOT DATE: 09-AUG-2005 15:12

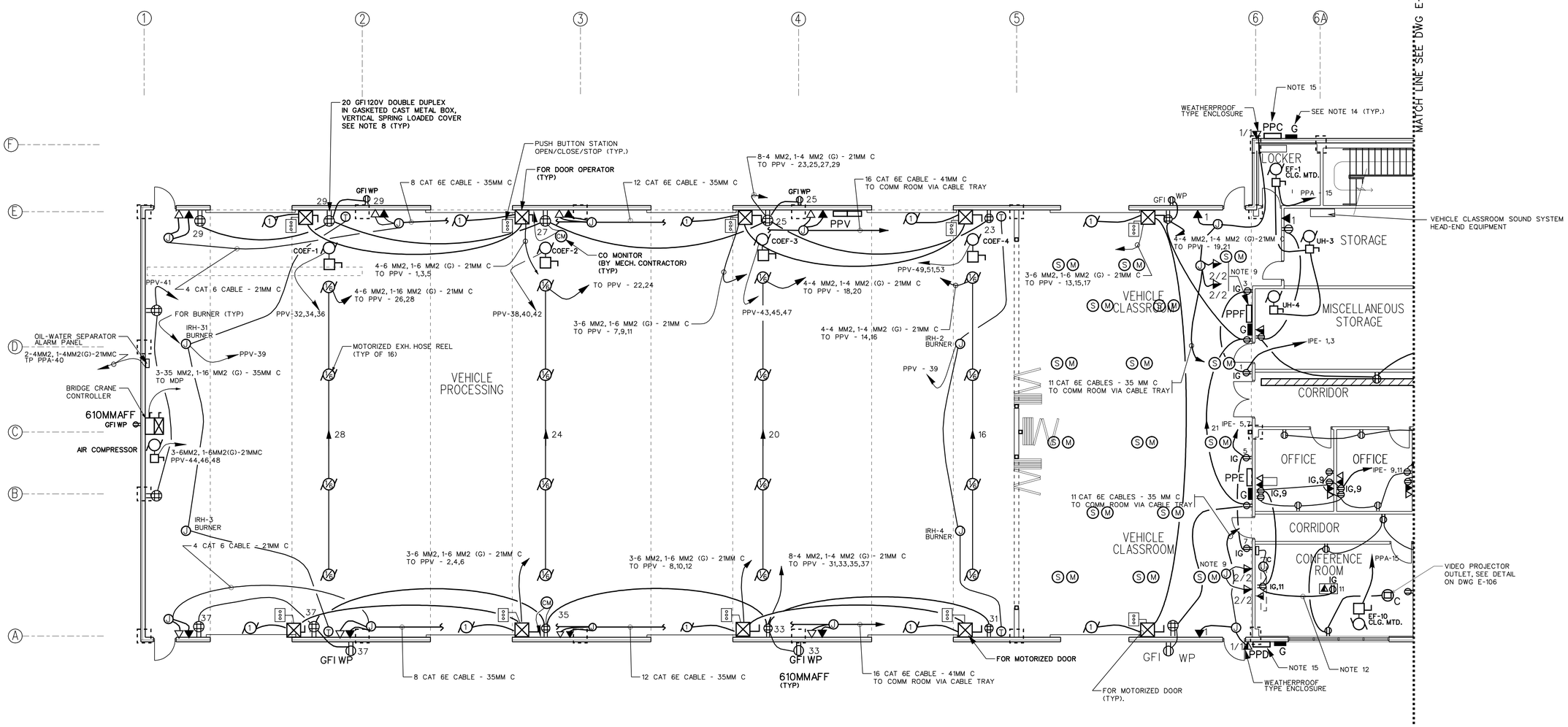

FIRST FLOOR PLAN – POWER & COMMUNICATIONS I

GENERAL NOTES:

1. REFER TO MECHANICAL DRAWINGS FOR THE ACTUAL LOCATION OF MECHANICAL EQUIPMENT.
2. CONVENIENCE RECEPTACLE OUTLET HOME RUNS SHALL BE 2-4MM2, 1-4MM2(G) - 21MM C, UNLESS NOTED OTHERWISE. ISOLATED GROUND RECEPTACLE OUTLET HOMERUNS SHALL BE 2-4MM2, 1-4MM2(G), 1-4MM2(IG) - 21MM C, UNLESS NOTED OTHERWISE.
3. REFER TO MECHANICAL EQUIPMENT CONNECTION SCHEDULE FOR CIRCUITING INFORMATION AND FEEDER SIZES OF MECHANICAL EQUIPMENT.
4. MC CABLE USE SHALL BE LIMITED TO A MAXIMUM LENGTH OF 1830MM.
5. LOCATION OF SWITCHES, RECEPTACLES, PANELS, DISCONNECT SWITCHES, PULL BOXES, AND OTHER DEVICES/EQUIPMENT ARE APPROXIMATE. COORDINATE EQUIPMENT LOCATION WITH OTHER TRADES TO PREVENT INTERFERENCE.
6. REFER TO SITE ELECTRICAL PLAN - DWG E-401 FOR OUTDOOR POWER WORK.
7. DRAWING SHOWS THE CORRECT NUMBER OF RECEPTACLE OUTLETS AND DATA/COMM JACKS. FINAL LOCATION OF DEVICES MAY CHANGE TO ACCOMODATE THE FINAL FURNITURE ARRANGEMENT.
8. ALL RECEPTACLES AND TEL/DATA OUTLETS IN VEHICLE BAYS AND VEHICLE CLASSROOMS TO BE MOUNTED 1220MM AFF FROM BOTTOM OF OUTLETS.
9. COORDINATE IN FIELD FOR EXACT LOCATIONS OF TELEPHONE & DATA OUTLETS IN VEHICLE CLASSROOMS.
10. REFER TO DWG E-601, SINGLE LINE DIAGRAM FOR FEEDER SIZES.
11. REFER TO DWG E-604 FOR MECHANICAL EQUIPMENT CIRCUIT SCHEDULE.
12. RUN CONDUIT & WIRES IN FLOOR SLAB. SEE DETAIL ON DWG E-502 & E-503.
13. CONTRACTOR SHALL PROVIDE SUPPORT FOR EXTERIOR PANELS AS REQUIRED.
14. REFER TO DWG E-504 FOR VEHICLE PAD GROUND BAR DETAIL.
15. PROVIDE PANEL PPC & PPD WITH NEMA 3R ENCLOSURE.

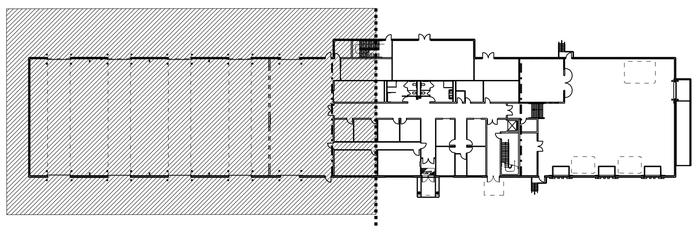

KEY PLAN
SCALE: 1:500

PROJECT NORTH
TRUE NORTH

SCALE: 1:100
0 2000 4000 10000

ALL DIMENSIONS ARE IN MILLIMETERS EXCEPTED AS NOTED

US Army Corps of Engineers
New York District

Mark	Description	Date	Appr.

Designed by: | Date: | Size: A1
Dwn by: | Ckd by: | Solicitation no.:
Reviewed by: | Contract no.:
Submitted by: | Rel date: 09-AUG-2005 16:13 | Plot scale: 1 | Plot date: 1/00000/00000
U.S. ARMY ENGINEER DISTRICT 26 FEDERAL PLAZA, RM 1937 NEW YORK, NEW YORK
File name: S:\Sources\Military\Fort Drum\Force\CD Contract\CAD\Submittal\Electrical\104XXX.dgn

FORCE MODERNIZATION PN 57708 TRAINING FACILITY /TRANSITIONAL FACILITY FORT DRUM, NEW YORK
FIRST FLOOR PLAN POWER & COMMUNICATIONS I

Sheet reference number:
E–104

SUBMITTED BY: E3ENDSVC
S:\FILEROOM\MILITARY\FORT DRUM\FORCEMOD\ELECTRICAL\90%SUBMITTAL\SHEETFILES\FORCEMOD57708_E-104XXX.DGN
PLOT DATE: 09-AUG-2005 15:13

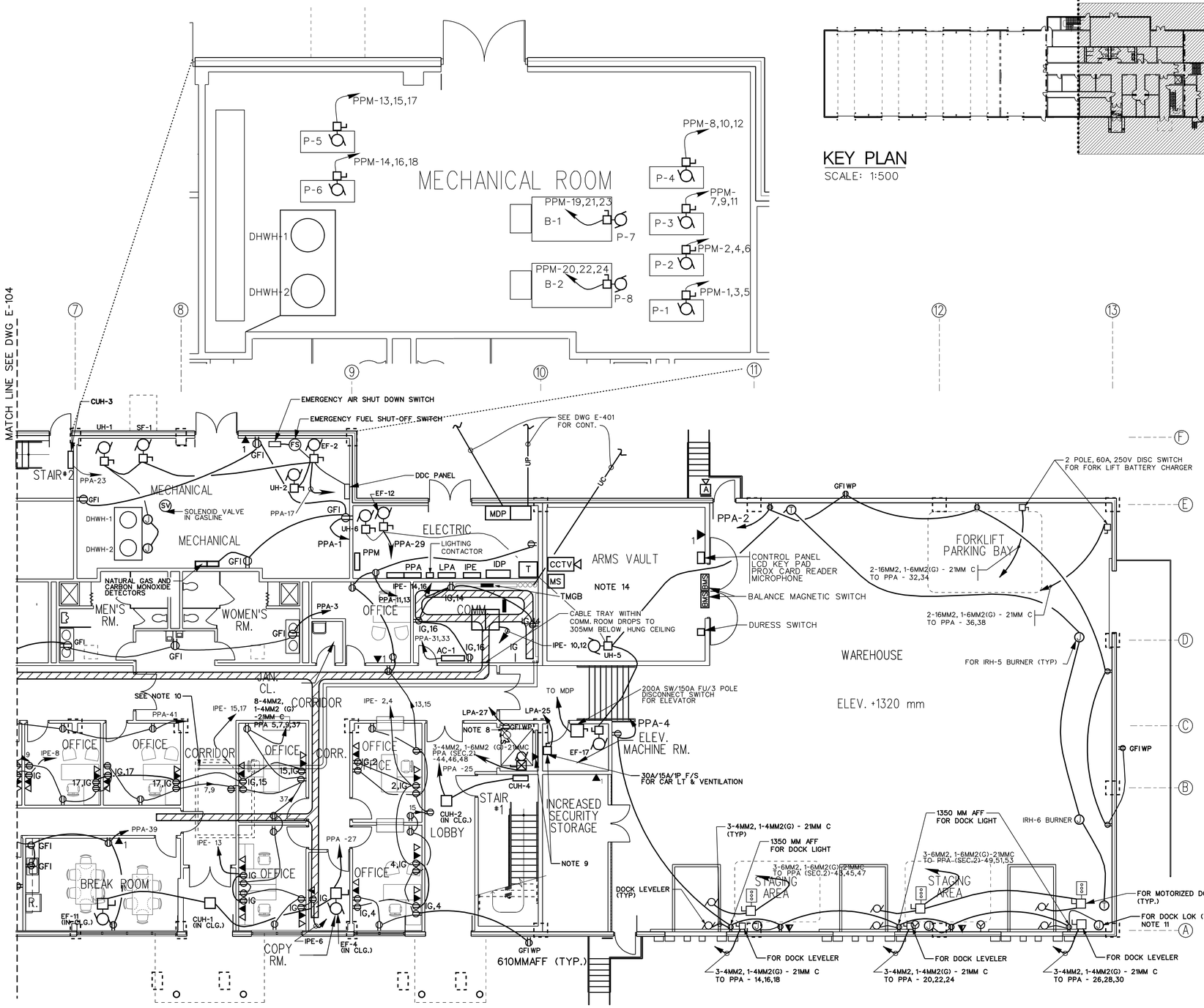

KEY PLAN

SCALE: 1:500

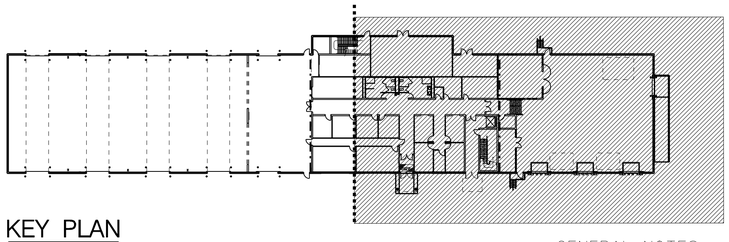

GENERAL NOTES:

1. REFER TO MECHANICAL DRAWINGS FOR THE ACTUAL LOCATION OF MECHANICAL EQUIPMENT.
2. CONVENIENCE RECEPTACLE OUTLET HOME RUNS SHALL BE 2-4MM2, 1-4MM2(G) - 21MM C, UNLESS NOTED OTHERWISE. ISOLATED GROUND RECEPTACLE OUTLET HOMERUNS SHALL BE 2-4MM2, 1-4MM2(G), 1-4MM2(IG) - 21MM C, UNLESS NOTED OTHERWISE.
3. REFER TO MECHANICAL EQUIPMENT CONNECTION SCHEDULE FOR CIRCUITING INFORMATION AND FEEDER SIZES OF MECHANICAL EQUIPMENT.
4. MC CABLE USE SHALL BE LIMITED TO A MAXIMUM LENGTH OF 1830MM.
5. LOCATION OF SWITCHES, RECEPTACLES, PANELS, DISCONNECT SWITCHES, PULL BOXES, AND OTHER DEVICES/EQUIPMENT ARE APPROXIMATE. COORDINATE EQUIPMENT LOCATION WITH OTHER TRADES TO PREVENT INTERFERENCE.
6. REFER TO SITE ELECTRICAL PLAN FOR OUTDOOR POWER WORK.
7. DRAWING SHOWS THE CORRECT NUMBER OF RECEPTACLE OUTLETS AND DATA/COMM JACKS. FINAL LOCATION OF DEVICES MAY CHANGE TO ACCOMODATE THE FINAL FURNITURE ARRANGEMENT.
8. COORDINATE LOCATION OF LIGHT SWITCH AND RECEPTACLE IN ELEVATOR PIT WITH ELEVATOR SHOP DRAWINGS. LIGHT FIXTURE SHALL BE ENCLOSED AND GASKETED, WALL MOUNTED. 150W INCANDESCENT WITH GLOBE AND GUARD - APPLETON #VPWB1075G OR EQUAL.
9. PROVIDE A CIRCUIT FOR ELEVATOR LIGHTS, VENTILATION AND TELEPHONE OUTLET FOR ELEVATOR TELEPHONE. MOUNT TELEPHONE OUTLET AT MIDWAY OF THE SHAFT.
10. 2-4" RGS UP TO COMM. ROOM ON 2ND FLOOR, TERMINATED 4" ABOVE FLOOR SLAB AND PROVIDE GROUND BUSHING.
11. COORDINATE WITH DOCK-LOK SHOP DWG. AND PROVIDE EXTENSION OF WIRING TO PIT AS REQUIRED.
12. REFER TO DWG E-601, SINGLE LINE DIAGRAM FOR FEEDER SIZES.
13. REFER TO DWG E-604 FOR MECHANICAL EQUIPMENT CIRCUIT SCHEDULE.
14. REFER TO DWG E-503 FOR ARMS VAULT SECURITY BLOCK DIAGRAM. COORDINATE WITH FORT DRUM PW IDS TECHNICIAN PRIOR TO INSTALLATION.

SCALE: 1:100

0 2000 4000 10000

ALL DIMENSIONS ARE IN MILLIMETERS EXCEPTED AS NOTED

FIRST FLOOR PLAN – POWER & COMMUNICATIONS II

US Army Corps of Engineers
New York District

Mark	Description	Date	Appr.

Designed by: Date: Size: A1
Dwn by: Ckd by: Solicitation no.:
Reviewed by: Contract no.:
Submitted by: File name: S:\Resources\Army\Fort Drum\Forcemod\Electrical\Revision\Submittals\Forcemod57708_E-105xxx.dgn
Plot date: 09-AUG-2005 15:13
Plot by: E3ENDSVC
Scale: 1:00000/1:00000

U.S. ARMY ENGINEER DISTRICT
CORPS OF ENGINEERS
NEW YORK, NEW YORK

FORCE MODERNIZATION PN 57708
FY03/FY07/FY08 /TRANSITIONAL FACILITY
FORT DRUM, NEW YORK

FIRST FLOOR PLAN
POWER &
COMMUNICATIONS II

Sheet reference number:
E–105

SUBMITTED BY: E3ENDSVC
S:\FILEROOM\MILITARY\FORT DRUM\FORCEMOD\ELECTRICAL\90%SUBMITTAL\SHEETFILES\FORCEMOD57708_E-105XXX.DGN
PLOT DATE: 09-AUG-2005 15:13

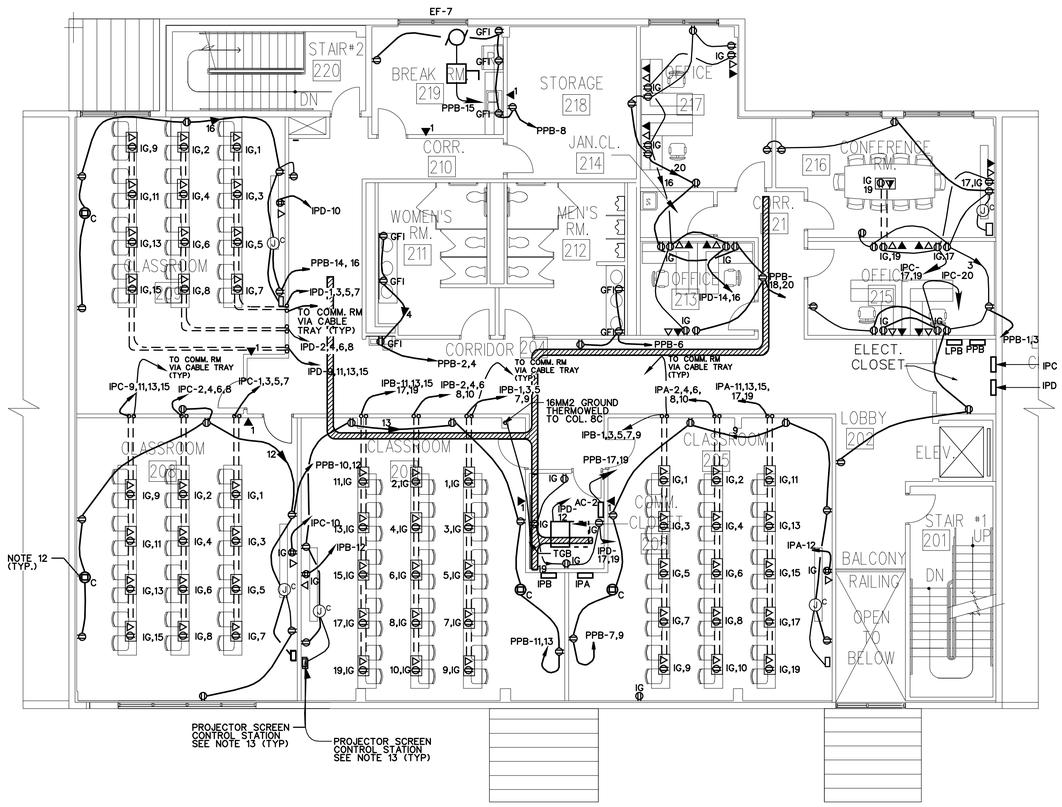

SECOND FLOOR PLAN – POWER & COMMUNICATIONS

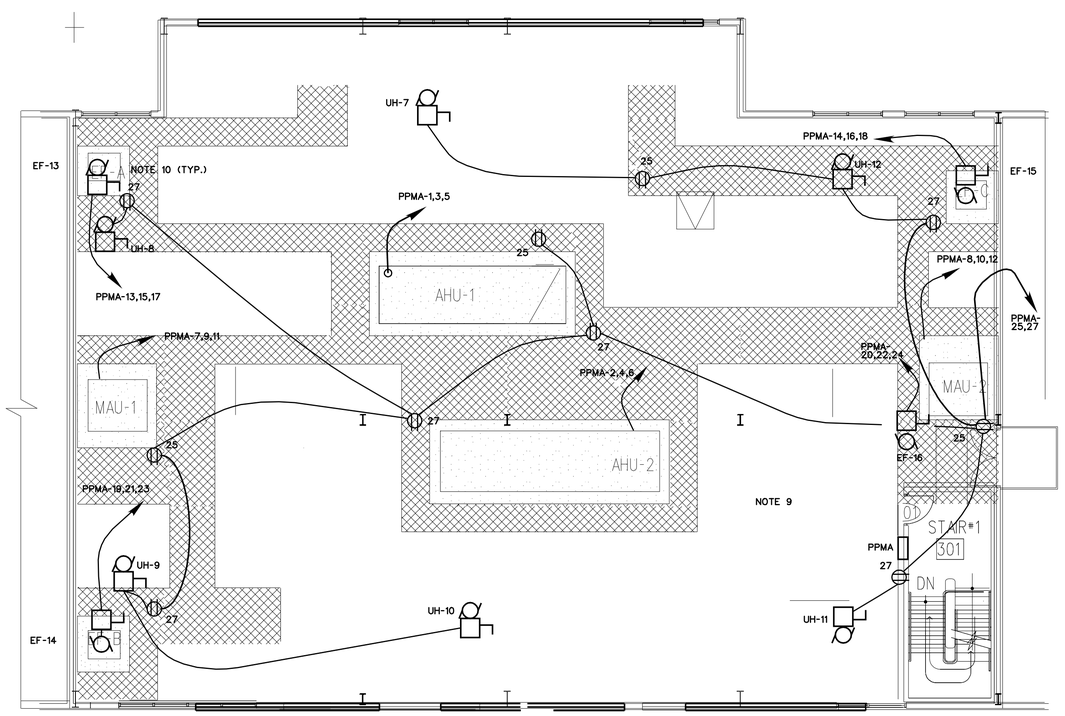

ATTIC FLOOR PLAN – POWER & COMMUNICATIONS

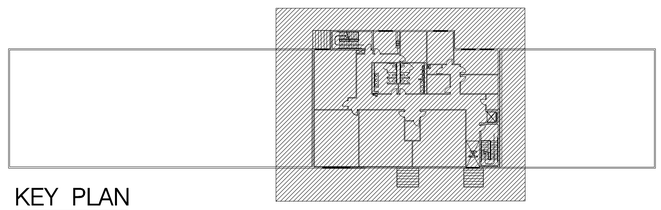

KEY PLAN

SCALE: 1:500

GENERAL NOTES:

1. REFER TO MECHANICAL DRAWINGS FOR THE ACTUAL LOCATION OF MECHANICAL EQUIPMENT.
2. CONVENIENCE RECEPTACLE OUTLET HOME RUNS SHALL BE 2-4MM2, 1-4MM2(G) - 21MM C, UNLESS NOTED OTHERWISE. ISOLATED GROUND RECEPTACLE OUTLET HOMERUNS SHALL BE 2-4MM2, 1-4MM2(G), 1-4MM2(IG) - 21MM C, UNLESS NOTED OTHERWISE.
3. REFER TO MECHANICAL EQUIPMENT CONNECTION SCHEDULE FOR CIRCUITING INFORMATION AND FEEDER SIZES OF MECHANICAL EQUIPMENT.
4. MC CABLE USE SHALL BE LIMITED TO A MAXIMUM LENGTH OF 1830MM.
5. LOCATION OF SWITCHES, RECEPTACLES, PANELS, DISCONNECT SWITCHES, PULL BOXES, AND OTHER DEVICES/EQUIPMENT ARE APPROXIMATE. COORDINATE EQUIPMENT LOCATION WITH OTHER TRADES TO PREVENT INTERFERENCE.
6. REFER TO SITE ELECTRICAL PLAN FOR OUTDOOR POWER WORK.
7. DRAWING SHOWS THE CORRECT NUMBER OF RECEPTACLE OUTLETS AND DATA/COMM JACKS. FINAL LOCATION OF DEVICES MAY CHANGE TO ACCOMODATE THE FINAL FURNITURE ARRANGEMENT.
8. REFER TO DWG E-601, SINGLE LINE DIAGRAM FOR FEEDER SIZES.
9. REFER TO DWG E-604 FOR MECHANICAL EQUIPMENT CIRCUIT SCHEDULE.
10. LOCATIONS OF RECEPTACLES ARE APPROXIMATE. CONTRACTOR SHALL PROVIDE SUPPORTING CHANNELS AS REQUIRED.
11. REFER TO DWG E-503 & E-504 FOR TYPICAL FLOOD BOX EMBEDDED CONDUIT & WIRING DIAGRAM.
12. C CEILING/WALL MOUNTED RECEPTACLE WITH DUPLEX DATA, VIDEO AND AUDIO OUTLETS - DETAIL "A" "C" DENOTES CEILING MOUNTED RECEPTACLES LOCATE PROJECTOR / RECEPTACLE AS PER MANUFACTURER RECOMMENDATION.
13. PROVIDE CIRCUIT AND WIRES FROM CEILING MOUNTED JUNCTION BOX TO THE PROJECTOR SCREEN CONTROL STATION.

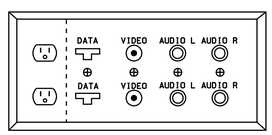

VIDEO PROJECTOR OUTLET

TYPICAL - NOT TO SCALE

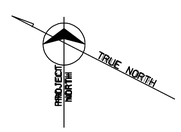

SCALE: 1:100

0 2000 4000 10000

ALL DIMENSIONS ARE IN MILLIMETERS EXCEPTED AS NOTED

US Army Corps of Engineers
New York District

U.S. ARMY ENGINEER DISTRICT CORPS OF ENGINEERS NEW YORK NEW YORK, NEW YORK

FN 5708
FORCE MODERNIZATION DEVELOPMENT (TRANSITIONAL FACILITY 1)
FORT DRUM, NEW YORK

SECOND & ATTIC FLOOR PLAN – POWER & COMMUNICATIONS

Sheet reference number: E–106

SUBMITTED BY: E3ENDSVC
S:\FILEROOM\MILITARY\FORT DRUM\FORCEMOD\ELECTRICAL\90%SUBMITTAL\SHEETFILES\FORCEMOD57708_E-106XXX.DGN
PLOT DATE: 09-AUG-2005 15:13

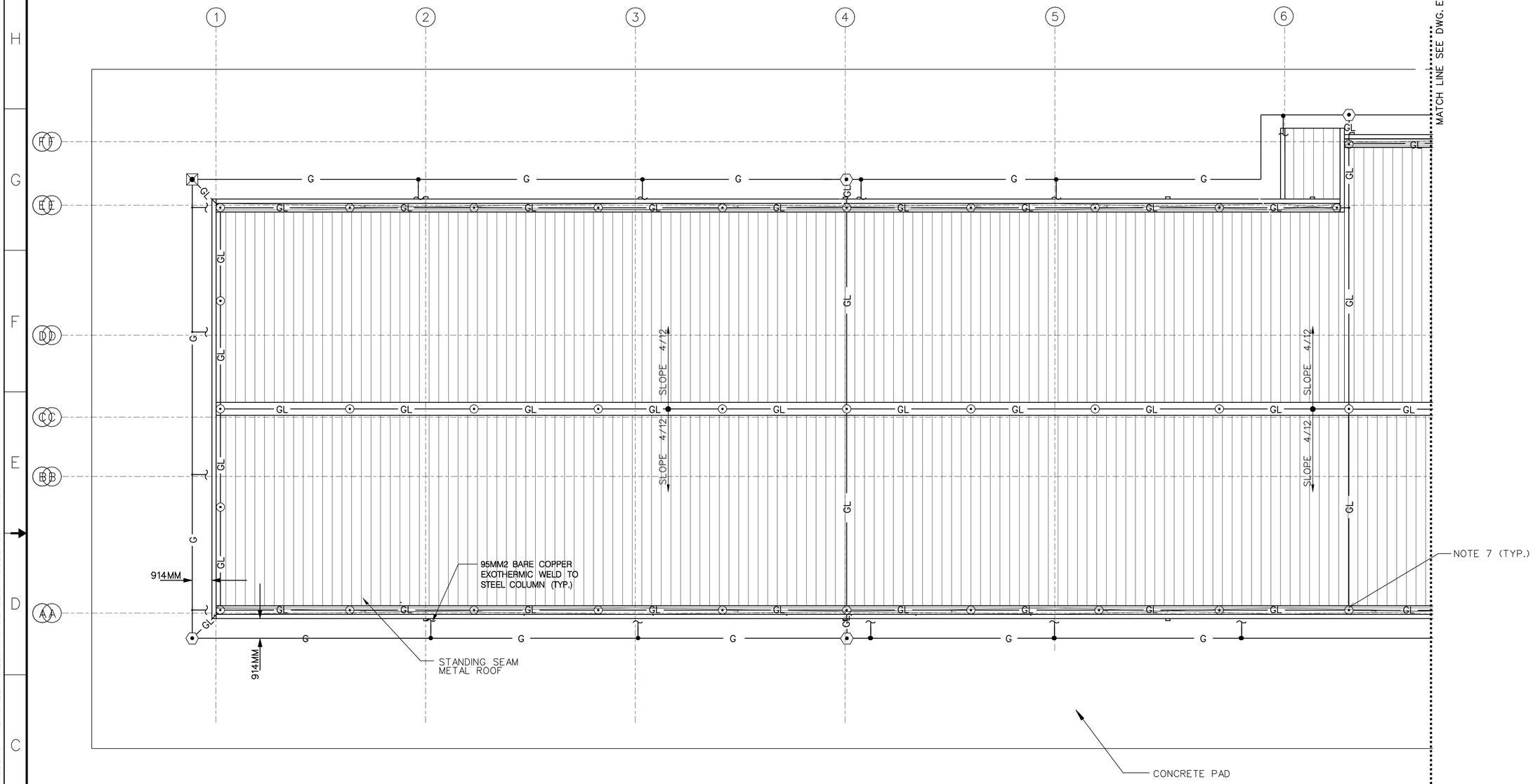

ROOF PLAN – LIGHTNING PROTECTION SYSTEM & GROUNDING SYSTEM I

NOTES:

1. THE COMPLETED INSTALLATION SHALL MEET THE REQUIREMENTS OF THE NATIONAL FIRE PROTECTION ASSOCIATION'S LIGHTNING PROTECTION CODE NFPA 780 AND THE INSTALLATION REQUIREMENTS FOR LIGHTNING PROTECTION SYSTEMS, UL96A OF UNDERWRITERS LABORATORIES INC. THE MASTER LABEL SHALL BE FURNISHED TO THE OWNER UPON COMPLETION.
2. COPPER GROUNDING COMPONENTS SHALL NOT BE MOUNTED ON ALUMINUM OR GALVANIZED STEEL SURFACES. ALUMINUM COMPONENTS SHALL BE USED TO AVOID ELECTROLYTIC CORROSION.
3. GROUNDED METAL BODIES WITHIN THE BONDING DISTANCE AS REQUIRED PER NFPA 780 SHALL BE BONDED TO THE SYSTEM USING BONDING CONDUCTORS AND FITTINGS IN ACCORDANCE WITH CODE REQUIREMENTS.
4. ROUTE GROUNDING CONDUCTOR COUNTERPOISE TO GROUNDING RODS IN 750MM DEEP TRENCH GROUNDING CONDUCTOR SHALL BE LOCATED A MINIMUM OF 914MM FROM LEADING EDGE OF FOUNDATION.
5. ENSURE ALL VENT PIPES, AND OTHER PIPE PENETRATIONS ARE BONDED TO THE GROUNDING CONDUCTOR (ALL BONDS TO THE PIPES ARE NOT SHOWN). ENSURE ALL EXHAUST HOODS ARE BONDED (VIA UL APPROVED BOLT CONNECTION) TO GROUNDING CONDUCTOR. SEE MECHANICAL AND ARCHITECTURE ROOF PLANS FOR THE LOCATION OF VENT PIPES, EXHAUST HOODS ETC..
6. DOWN CONDUCTOR SHALL BE RUN EITHER EXPOSED INSIDE THE BUILDING IN NON-FINISHED AREA OR CONCEALED OUTSIDE THE BUILDING WALL BETWEEN THE CMU & GYPBOARD FURRING.
7. ALL AIR TERMINALS ALONG THE EAVES SHALL BE MOUNTED ON THE PARAPET WALL. SEE MOUNTING DETAIL ON DWG E-502.

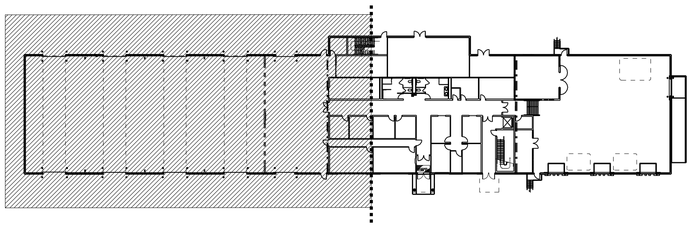

KEY PLAN

SCALE: 1:500

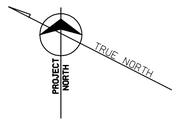

SCALE: 1:100

0 2000 4000 10000

ALL DIMENSIONS ARE IN MILLIMETERS EXCEPT AS NOTED

US Army Corps of Engineers
New York District

Mark	Description	Date	Appr.

US ARMY ENGINEER DISTRICT
FORT DRUM, NEW YORK
NEW YORK, NEW YORK

Designed by: Date:
Dwn by: Ckd by: Solicitation no.:
Reviewed by: Contract no.:
Submitted by: Rev date: 08-AUG-2005 16:13
Rev by: dlmcfarl
Scale: 1:00000/1:00000
Size: A0

File name: S:\Division\Military\Fort Drum\Force\DCD\Electrical\SolidWorks\Models\Foundation\Grid_& Grounding\

FORCE MODERNIZATION TRANSITIONAL FACILITY
FORT DRUM, NEW YORK

FN 37708
ROOF PLAN – LIGHTNING PROTECTION SYSTEM & GROUNDING SYSTEM I

Sheet reference number:
E–107

SUBMITTED BY: E3ENDSVC PLOT DATE: 09-AUG-2005 15:13
S:\FILEROOM\MILITARY\FORT DRUM\FORCEMOD\ELECTRICAL\90%SUBMITTAL\SHEETFILES\FORCEMOD57708_E-107XXX.DGN

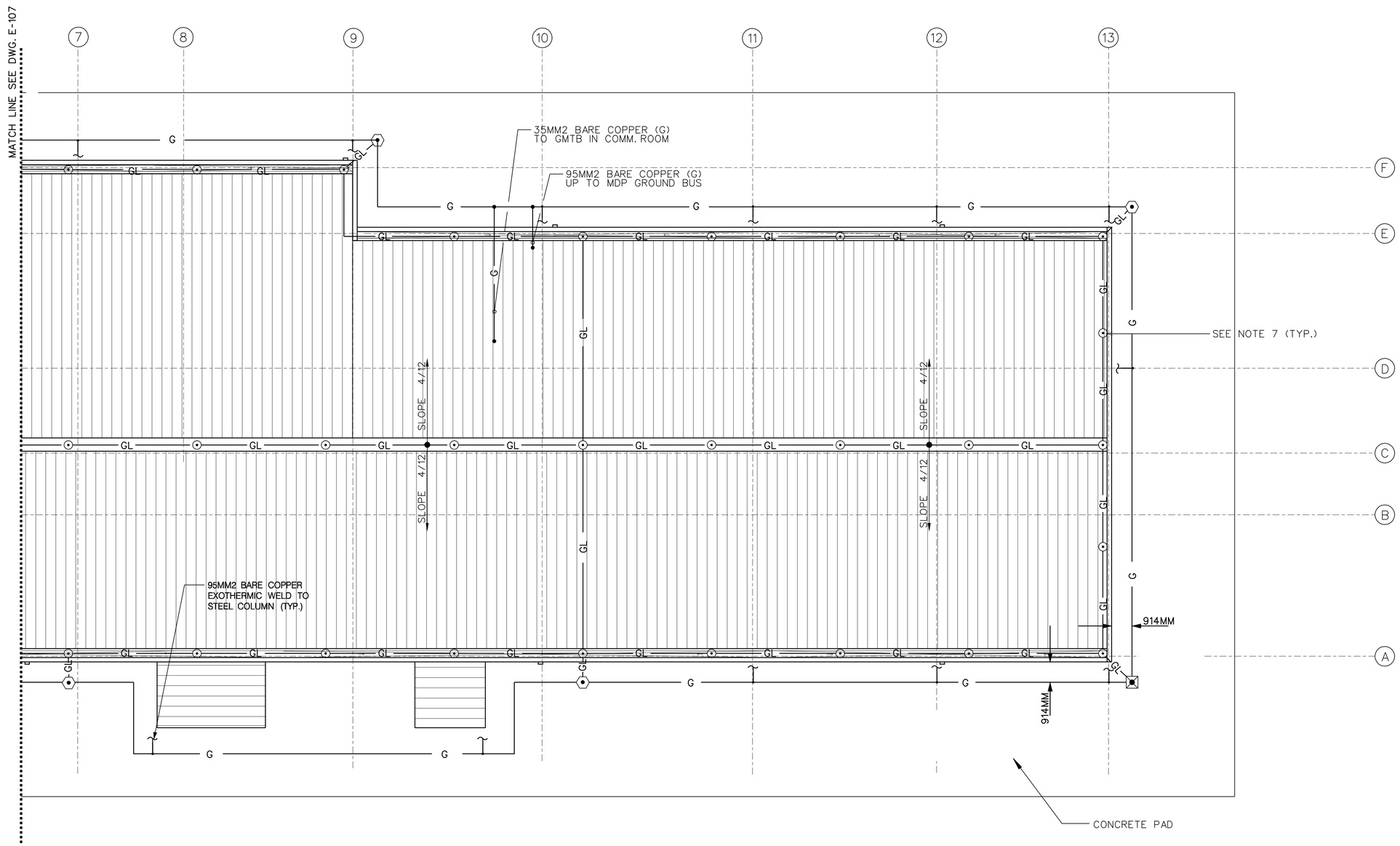

ROOF PLAN – LIGHTNING PROTECTION SYSTEM & GROUNDING SYSTEM II

NOTES:

1. THE COMPLETED INSTALLATION SHALL MEET THE REQUIREMENTS OF THE NATIONAL FIRE PROTECTION ASSOCIATION'S LIGHTNING PROTECTION CODE NFPA 780 AND THE INSTALLATION REQUIREMENTS FOR LIGHTNING PROTECTION SYSTEMS, UL96A OF UNDERWRITERS LABORATORIES INC. THE MASTER LABEL SHALL BE FURNISHED TO THE OWNER UPON COMPLETION.
2. COPPER GROUNDING COMPONENTS SHALL NOT BE MOUNTED ON ALUMINUM OR GALVANIZED STEEL SURFACES. ALUMINUM COMPONENTS SHALL BE USED TO AVOID ELECTROLYTIC CORROSION.
3. GROUNDED METAL BODIES WITHIN THE BONDING DISTANCE AS REQUIRED PER NFPA 780 SHALL BE BONDED TO THE SYSTEM USING BONDING CONDUCTORS AND FITTINGS IN ACCORDANCE WITH CODE REQUIREMENTS.
4. ROUTE GROUNDING CONDUCTOR COUNTERPOISE TO GROUNDING RODS IN 750MM DEEP TRENCH GROUNDING CONDUCTOR SHALL BE LOCATED A MINIMUM OF 914MM FROM LEADING EDGE OF FOUNDATION.
5. ENSURE ALL VENT PIPES, AND OTHER PIPE PENETRATIONS ARE BONDED TO THE GROUNDING CONDUCTOR (ALL BONDS TO THE PIPES ARE NOT SHOWN). ENSURE ALL EXHAUST HOODS ARE BONDED (VIA UL APPROVED BOLT CONNECTION) TO GROUNDING CONDUCTOR. SEE MECHANICAL AND ARCHITECTURE ROOF PLANS FOR THE LOCATION OF VENT PIPES, EXHAUST HOODS ETC..
6. DOWN CONDUCTOR SHALL BE RUN EITHER EXPOSED INSIDE THE BUILDING IN NON-FINISHED AREA OR CONCEALED OUTSIDE THE BUILDING WALL BETWEEN THE CMU & GYPBOARD FURRING.
7. ALL AIR TERMINALS ALONG THE EAVES SHALL BE MOUNTED ON THE PARAPET WALL. SEE MOUNTING DETAIL ON DWG E-502.

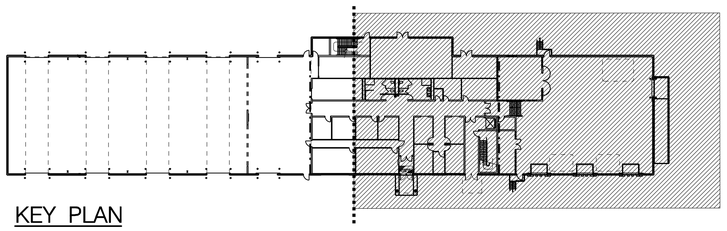

KEY PLAN

SCALE: 1:500

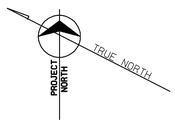

SCALE: 1:100

0 2000 4000 10000

ALL DIMENSIONS ARE IN MILLIMETERS EXCEPT AS NOTED

US Army Corps of Engineers
New York District

Mark	Description	Date	Appr.

U.S. ARMY ENGINEER DISTRICT
CORPS OF ENGINEERS
NEW YORK, NEW YORK

Designed by: | Date: | Date: A1
Dwn by: | Ckd by: | Solicitation no.:
Reviewed by: | Contract no.:
Submitted by: | Rel date: 09-AUG-2005 15:14 | Plot scale: 1:100000/100000 | Plot date:

File name: S:\Sources\Library\Fort Drum\Foundation\FORCE MOD\Military\Structural\Roofing & Cladding\

FN: 57708
FORCE MODERNIZATION / TRAINING / TRANSITIONAL FACILITY
FORT DRUM, NEW YORK

ROOF PLAN – LIGHTNING PROTECTION SYSTEM & GROUNDING SYSTEM II

Sheet reference number:
E–108

SUBMITTED BY: E3ENDSVC PLOT DATE: 09-AUG-2005 15:14
S:\FILEROOM\MILITARY\FORT DRUM\FORCEMOD\ELECTRICAL\90%SUBMITTAL\SHEETFILES\FORCEMOD57708_E-108XXX.DGN

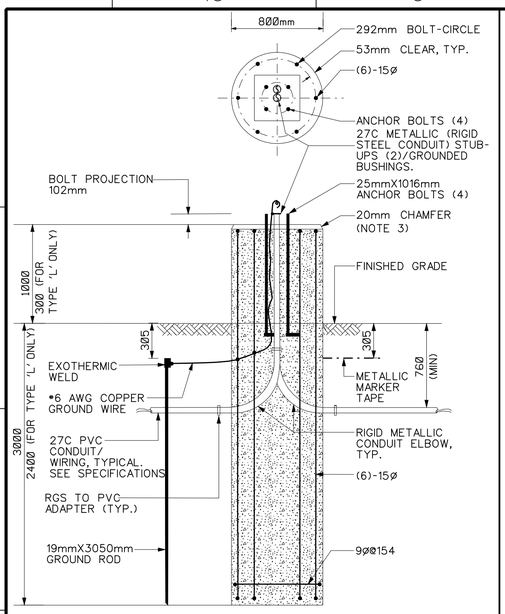

TYPICAL LIGHT POLE FOUNDATION FOR TYPE 'G','H1','H2','K','L'&'T'

N.T.S.

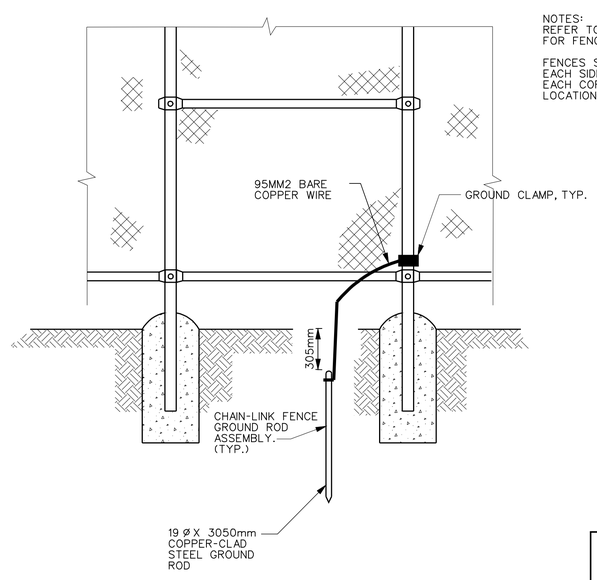

CHAIN-LINK FENCE GROUNDING-TYP.

N.T.S.

NOTES:
REFER TO SITE/CIVIL DRAWINGS FOR FENCE AND GATE POST DETAILS.

FENCES SHALL BE GROUNDED ON EACH SIDE OF ALL GATES AND AT EACH CORNER. GROUNDING LOCATIONS SHALL NOT EXCEED 198M.

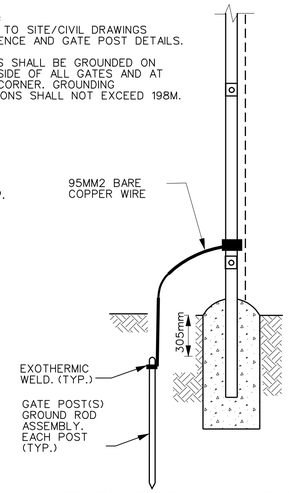

GATE POST GROUNDING-TYP.

N.T.S.

NOTES

1. EXISTING UTILITY POLES #1D-49 AND #2D-49 ARE TO BE RELOCATED. CONTRACTOR SHALL INSTALL NEW 14M WOOD POLE (CLASS 2 OR CLASS 3)AT NEW LOCATIONS AS INDICATED. REINSTALL EXISTING POLE MOUNTED LIGHTING FIXTURE (FOR UTILITY POLE #2D-49 ONLY), SCHEDULE A POWER SHUT-DOWN WITH FT DRUM 15 DAYS IN ADVANCE, CUT AND/OR EXTEND EXISTING 15KV POWER, LIGHTING, GROUNDING, COMMUNICATION AND SECURITY CABLES AND WIRES, IF REQUIRED, TO NEW LOCATIONS. MAINTAIN THE CONTINUITY OF EXISTING CIRCUITS.

2. FIBER OPTIC CABLES SHALL BE RUN TO BLDG T-549.

3. PROVIDE DIG. TAPE AND TRACE WIRE, TRACE WIRE TEST STATION/VAULT, ETC. AS REQUIRED FOR ALL UNDERGROUND ELECTRICAL AND COMMUNICATIONS DUCT BANKS AS PER FD DESIGN STANDARD. REFER TO DETAIL ON CIVIL DRAWINGS.

4. CONDUIT FOR EXTERIOR LIGHTING SHALL BE SCHEDULE 40 PVC AND INSTALLED AT 760MM BELOW GRADE. PROVIDE RIGID GALVANIZED STEEL ELBOW WHERE CONDUIT STUB IS REQUIRED.

5. GATE OPERATOR INSTALLATION TO BE COORDINATED FOR CONNECTION TO GATE WITH PROPER BRACKETS AND GUIDES. GATE OPERATOR POWER TO BE IN SEPARATE CONDUIT FROM COMMUNICATION CABLING CONDUITS AND MAY NOT BE RUN IN SAME HANDHOLES. PROVIDE CONCRETE BASE AS REQUIRED BY MANUFACTURER.

6. SENSING LOOP SHALL BE 600V, 1.5 MM2 XLPE CABLE WITH REQUIRED AMOUNT OF LOOPS PER MANUFACTURER. SAW CUT CONCRETE OR PAVING WITH 11MM BLADE, NO DEEPER THAN 1 9/32 IN DEPTH, AND AWAY FROM ANY STEEL REINCEMENT. ONLY USE SEALANT WHICH IS LISTED FOR TRAFFIC LOOPS. TWIST LEAD IN WIRE AT A MINIMUM OF 6 TURNS PER FOOT TO LOOP FROM CONTROLLER. NO SPLICING OF WIRING WILL BE PERMITTED.

7. PHOTOCELL CONTROLLER WIRING TO BE PROVIDED IN A 27MM2 PVC CONDUIT FROM GATE CONTROLLER TO TRANSMITTER AND RECEIVER. PROVIDE A 6/C 2.5MM2 FROM THE GATE OPERATOR TO THE RECEIVER AND A 2/C 2.5MM2 TO THE TRANSMITTER IN SAME CONDUIT.

8. COORDINATE WITH SLIDE GATE OPERATOR MANUFACTURER FOR WIRING.

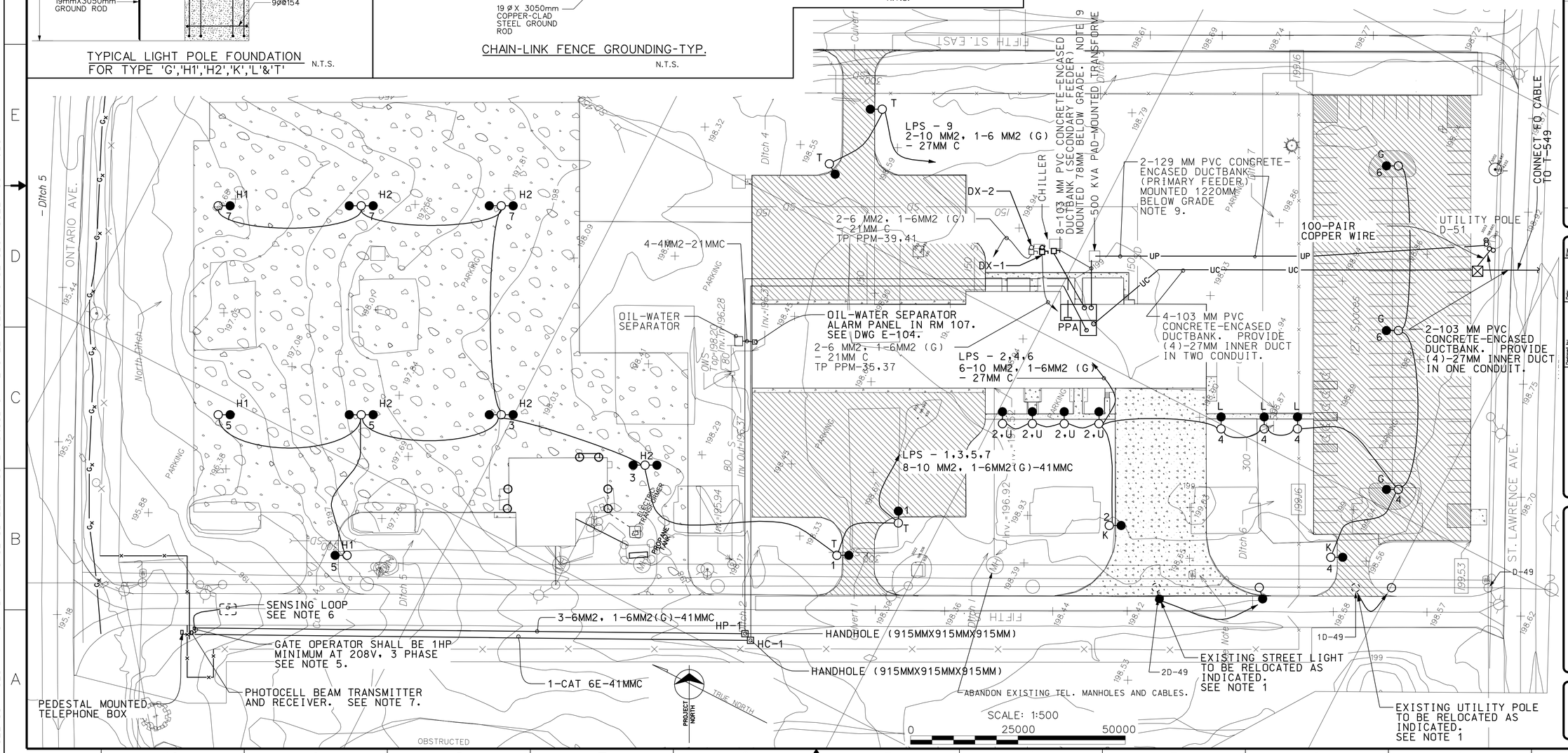

US Army Corps of Engineers
New York District

Mark	Description	Date	Appr.

U.S. ARMY ENGINEER DISTRICT
CORPS OF ENGINEERS
NEW YORK, NEW YORK

Designed by: | Date: | Size: A1
Dwn by: | Ckd by: | Solicitation no.:
Reviewed by: | Contract no.:
Submitted by: | Rejected by: | Date: 09-AUG-2005 15:14 | Plot scale: 1:00000 | Plot date: 1/00000/00000

File name: S:\fileroom\military\fort drum\forcemod\electrical\drawings\forcemod57708_e-401xxx.dgn

FORCE MODERNIZATION PROJECTS /TRANSITIONAL FACILITY
FORT DRUM, NEW YORK

ELECTRICAL SITE PLAN

PN 57708
FD 02-03-04-05-06

Sheet reference number:
E-401

PLOT DATE: 09-AUG-2005 15:14
SUBMITTED BY: E3ENDSVC
S:\FILEROOM\MILITARY\FORT DRUM\FORCEMOD\ELECTRICAL\90%SUBMITTAL\SHEETFILES\FORCEMOD57708_E-401XXX.DGN

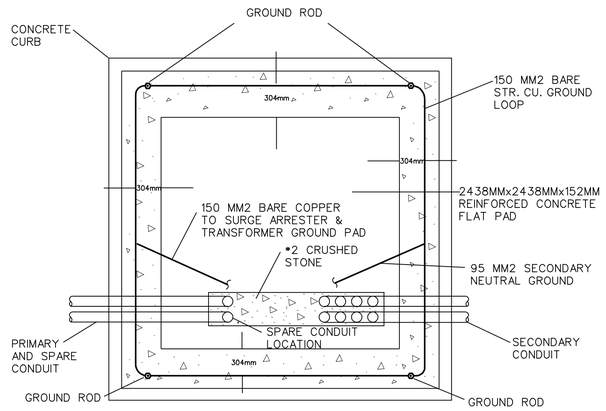

PLAN

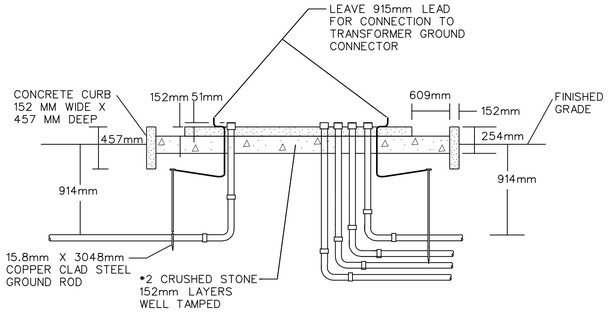

FRONT ELEVATION

GROUNDING AND CONDUIT PLAN
THREE PHASE, PAD MOUNTED TRANSFORMER
N.T.S

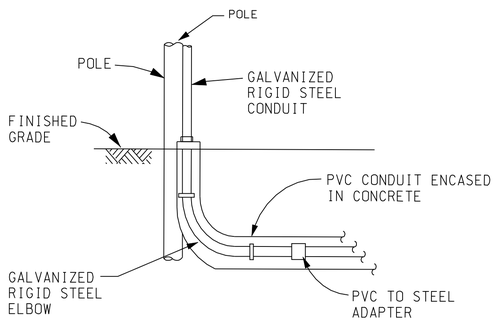

POLE-RISER DETAIL
TRANSITION FROM UNDERGROUND PVC
TO POLE USING STEEL CONDUITS
NTS

NOTE:

DETAIL TYPICAL FOR UNDERGROUND CABLE TO OVERHEAD POLE TRANSITION

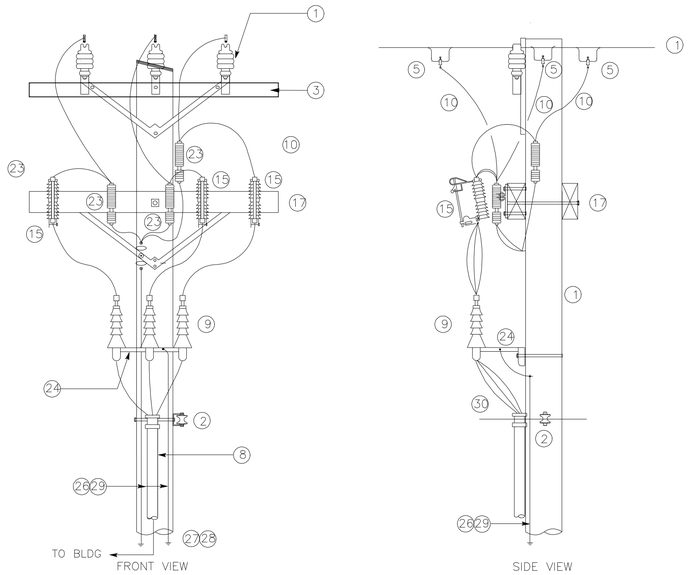

RISER POLE
N.T.S.

SCHEDULE OF POLE EQUIPMENT	
NO.	DESCRIPTION
1	(EXISTING) MV OVHD LINE/POLE
2	(EXISTING) SECONDARY CLEVIS WITH SPOOL INSULATOR
3	(EXISTING) CROSS ARM
5	STIRRUP, COMPRESSION TYPE AND HOT LINE CLAMP
8	RIGID CONDUIT, 3.05M (NOM), FROM PVC/RIGID CONVERSION.
9	1/C TERMINATION, 15/25 KV
10	PRIMARY CONDUCTOR
15	FUSED CUT OUT 15/25 KV
17	LOWER CROSS ARM
23	LIGHTNING ARRESTOR 10KV METAL OXIDE DISTRIBUTION CLASS
24	POTHEAD TRI-MOUNTING BRACKET
26	25MM2 SOLID COPPER
27	GROUND ROD
28	GROUND ROD CLAMP
29	HALF ROUND WOOD, PLASTIC OR FIBER MOLDING
30	WEATHER HEAD (NOT SHOWN)

NOTES:

1. EQUIPMENT SHOWN ARE NEW UNLESS NOTED OTHERWISE.
2. SCHEDULE SHOWN LISTS THE MAJOR ITEMS/EQUIPMENT ONLY. INCEDENTAL ITEMS AND OTHER EQUIPMENT NECESSARY FOR A COMPLETE INSTALLATION SHALL BE PROVIDED AT NO ADDITIONAL COST TO THE GOVERNMENT.
3. RISER CONDUIT (NO. 8) SHALL BE RIGID STEEL CONDUIT UP TO 3048MM ABOVE GROUND LEVEL.
4. TOP END OF RISER CONDUIT SHALL BE PACKED WITH FIRE RETARDANT INSULATION UPON COMPLETION OF CONDUCTOR INSTALLATION
5. COORDINATE IN FIELD WITH EXISTING 15KV POWER, LIGHTING, GROUNDING, COMMUNICATION AND SECURITY CABLE AND WIRES, ETC. ON THE EXISTING RISER POLE, REROUTE SAME IF REQUIRED.

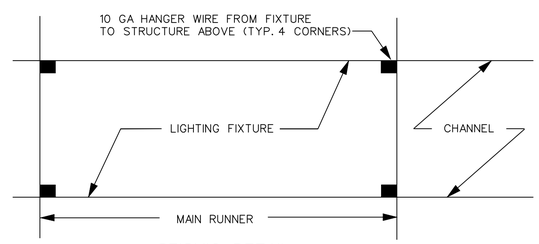

SEISMIC DETAIL
CEILING MOUNTED LIGHT FIXTURE
N.T.S.

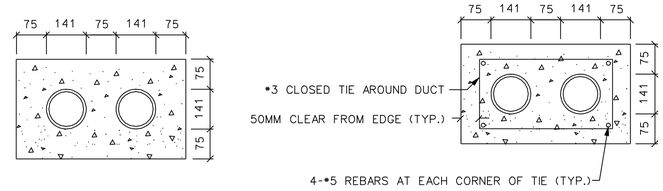

2 - 129MM CONDUIT (PVC) ENCASED DUCTBANK
N.T.S.

2 - 129MM CONDUIT (PVC) ENCASED DUCTBANK WITH REINFORCEMENT
N.T.S.

DUCTBANK NOTE:

1. PROVIDE REINFORCEMENT FOR DUCTS UNDER ROADWAYS & PARKING AREAS
2. 8-103MM CONDUIT (PVC) ENCASED DUCTBANK SIMILAR TO 4-103MM SECTIONS.

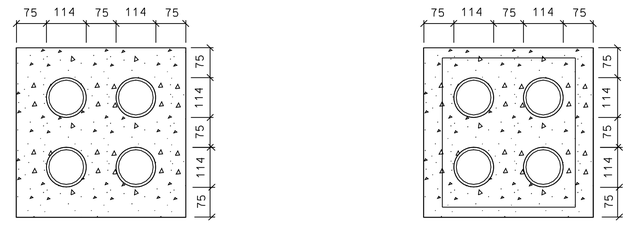

4 - 103MM CONDUIT (PVC) ENCASED DUCTBANK
N.T.S.

4 - 103MM CONDUIT (PVC) ENCASED DUCTBANK WITH REINFORCEMENT
N.T.S.

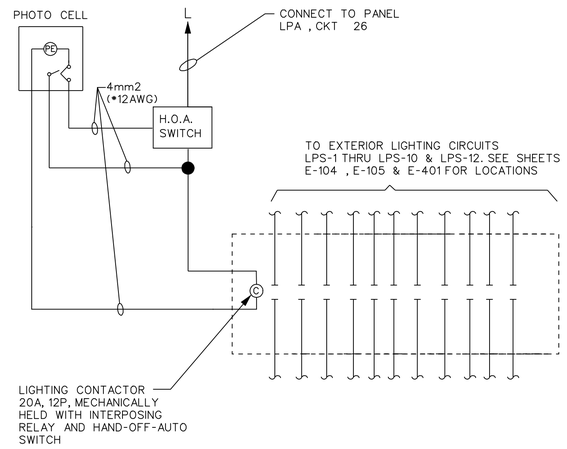

EXTERIOR LIGHTING CONTROL
WIRING DIAGRAM
N.T.S.

NOTES
1. SEE PLANS AND PANEL SCHEDULES FOR CIRCUITING.

US Army Corps of Engineers
New York District

Mark	Description	Date	Appr.

U.S. ARMY ENGINEER DISTRICT
JAMES A. FARLEY BUILDING
NEW YORK, NEW YORK

Designed by: | Date: | Size: A1
Dwn by: | Ckd by: | Solicitation no.:
Reviewed by: | Contract no.:
Submitted by: | Plot date: 09-AUG-2005 15:14 | Plot by: admjbrown | Scale: 1:00000/1:00000
File name: S:\Division\Military\Fort Drum\Forcemod\Technical\Specifications\Contract Drawings & Schedules\

FORCE MODERNIZATION FACILITY (TRANSITIONAL FACILITY)
FN 57708
FORT DRUM, NEW YORK

ELECTRICAL DETAILS I

Sheet reference number:
E-501

SUBMITTED BY: E3ENDSVC
S:\FILEROOM\MILITARY\FORT DRUM\FORCEMOD\ELECTRICAL\90%SUBMITTAL\SHEETFILES\FORCEMOD57708_E-501XXX.DGN
PLOT DATE: 09-AUG-2005 15:14

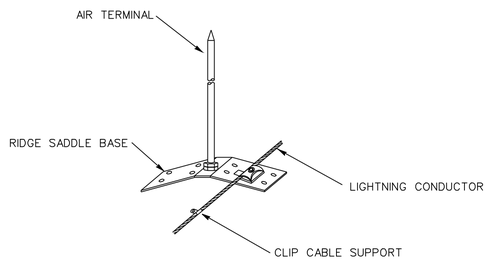

RIDGE SADDLE AIR TERMINAL DETAIL

N.T.S.

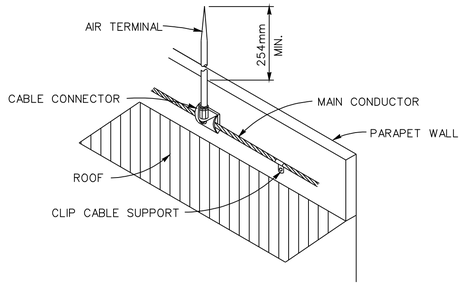

PARAPET-MOUNTED AIR TERMINAL

N.T.S.

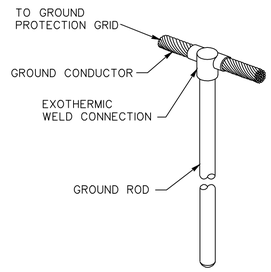

GROUND ROD

N.T.S.

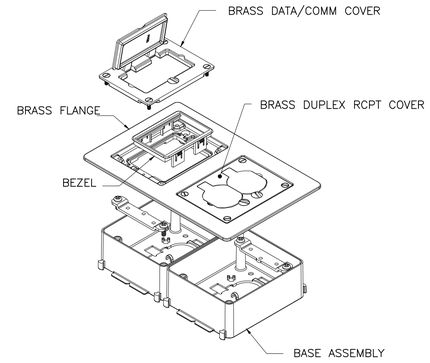

FLOOR MOUNTED DATA/COMM OUTLET

N.T.S.

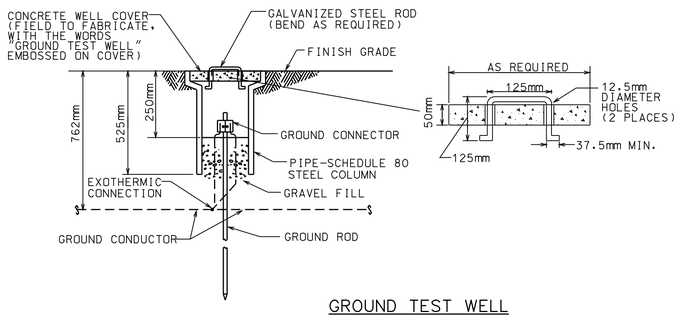

GROUND TEST WELL

N.T.S.

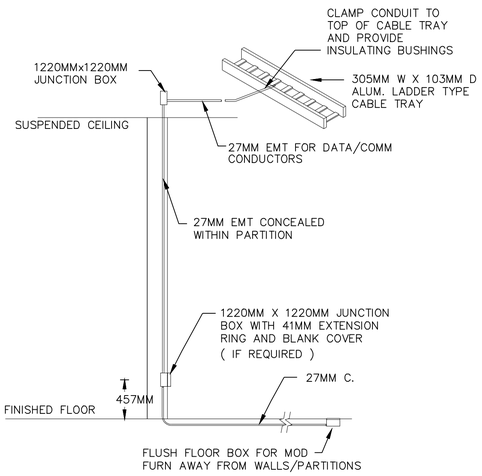

FLUSH FLOOR BOX DATA/
COMM CONNECTION DETAIL

N.T.S.

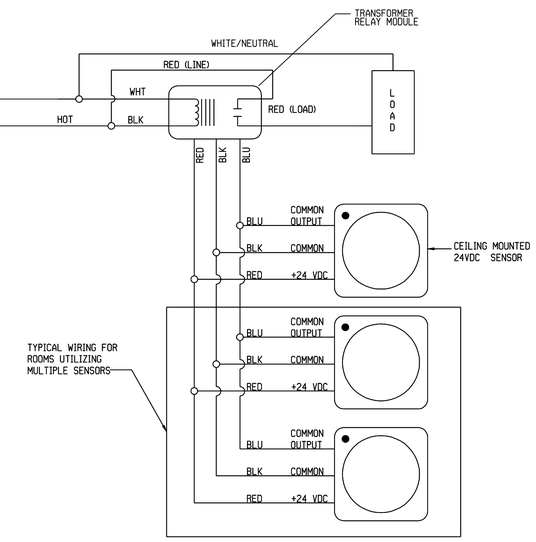

INTERIOR LIGHTING CONTROL

WIRING DIAGRAM

NTS

NOTES:
1. VERIFY WITH MANUFACTURER THE MAXIMUM PERMITTED NO. OF SENSORS PER RELAY MODULE.
2. LOCATE ALL RELAY MODULES IN NEMA I ENCLOSURES, AND WIRING SHALL BE ROUTED IN CONDUIT.
3. SEE PLANS AND PANEL SCHEDULES FOR CIRCUITING

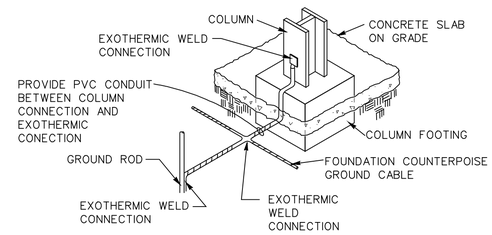

BUILDING GROUND LOOP COUNTERPOISE
TYPICAL COLUMN BASE GROUNDING DETAIL

N.T.S.

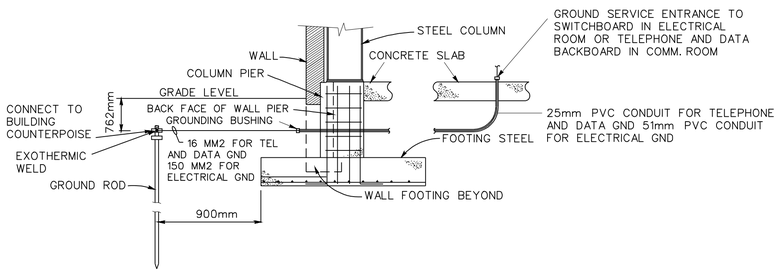

GROUND ENTRANCE DETAIL

N.T.S.

NOTES:
1. CONNECT GROUND TO COUNTERPOISE, BUILDING STEEL, METALLIC WATER SERVICE, AND FOUNDATION REINFORCED STEEL AS REQUIRED BY NEC.

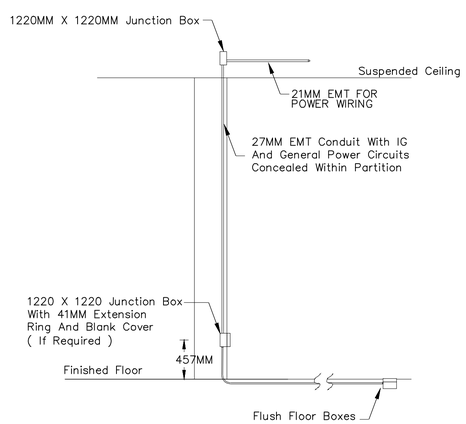

FLUSH FLOOR BOX
POWER CONNECTION DETAIL

N.T.S.

US Army Corps of Engineers
New York District

Mark	Description	Date	Appr.

Designed by: | Date: | Scale: All
Dwn by: | Ckd by: | Solicitation no.:
Reviewed by: | Contract no.:
Submitted by: | Plot date: 09-AUG-2005 15:14 | Plot by: eldrickjw | Size: 11X20X1.00000

File name: S:\Sources\Military\Fort Drum\Projects\Electrical\UG Duct\Fy05\Electrical\Details\Foundation\Bldg & Grounding.dgn

US ARMY ENGINEER DISTRICT
CORPS OF ENGINEERS
NEW YORK, NEW YORK

FORCE MODERNIZATION TRANSITIONAL FACILITY
FORT DRUM, NEW YORK
FN 37708
EDF07006

ELECTRICAL DETAILS II

Sheet reference number:
E-502

SUBMITTED BY: E3ENDSVC PLOT DATE: 09-AUG-2005 15:14
S:\FILEROOM\MILITARY\FORT DRUM\FORCEMOD\ELECTRICAL\90%SUBMITTAL\SHEETFILES\FORCEMOD57708_E-502XXX.DGN

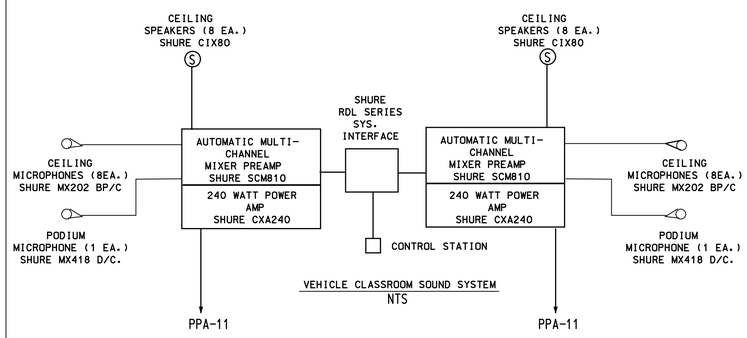

VEHICLE CLASSROOM SOUND SYSTEM
NTS

NOTES:

1. COORDINATE WITH MANUFACTURER FOR EXACT COMPONENTS AND WIRING REQUIREMENTS.

2. LOCATE HEAD-END EQUIPMENT IN STORAGE ROOM.

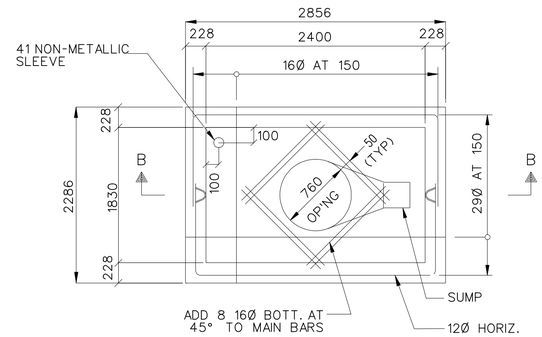

PLAN

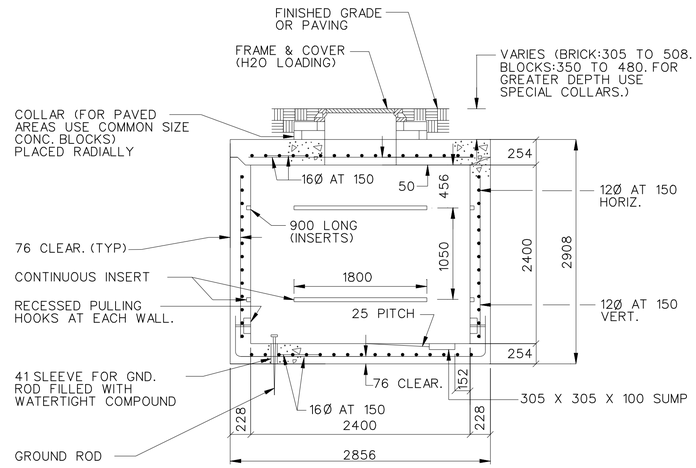

SECTION B-B

ELECTRICAL/COMMUNICATIONS MANHOLE

N.T.S

NOTE:

1. PROVIDE ADEQUATE "KNOCKOUTS" AND/OR WINDOWS FOR DUCT(S)/DUCTBANK AS SPECIFIED.

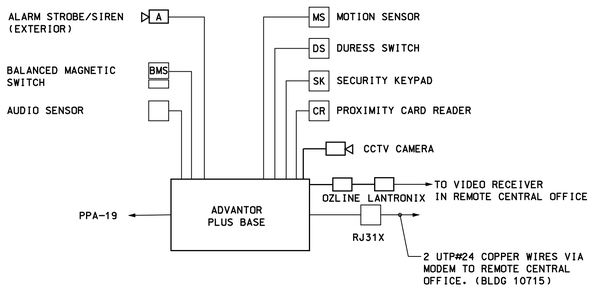

ARMS VAULT SECURITY SYSTEM BLOCK DIAGRAM
NTS

NOTES:

1. COORDINATE WITH ADVANTOR SYSTEM CORPORATION (800) 438-6415 FOR EXACT COMPONENTS AND WIRING REQUIREMENTS.

2. COORDINATE WITH FORT DRUM PHYSICAL SECURITY OFFICE (315) 772-9924 FOR EXACT DEVICE LOCATIONS PRIOR TO INSTALLATIONS.

3. PROVIDE RECHARGEABLE BACK-UP BATTEY POWER AND CHARGER.

NOTE:
WHEN RECEPTACLE IS IN USE, DOOR SHALL BE CAPABLE OF CONCEALING PLUG & RECEPTACLE, WITH WIRE PROTRUDING THROUGH THE NOTCHED, CLOSED DOOR. DESIGN SHALL BE FOR INTENDED PURPOSE AND SHALL BE IMPACT RESISTANT.

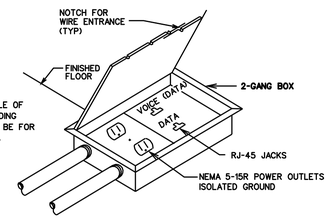

DETAIL "A"
FLUSH FLOOR COMBINATION POWER/COMM. DETAIL
N.T.S.

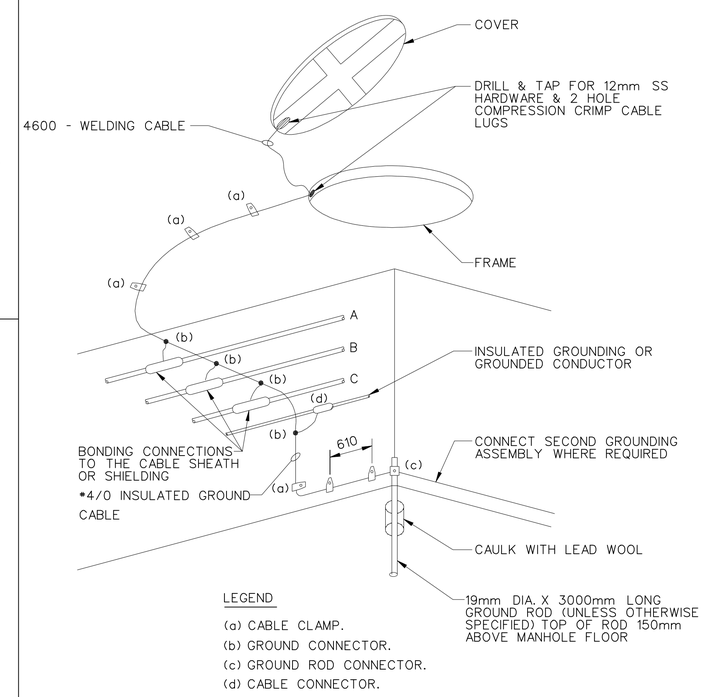

LEGEND

(a) CABLE CLAMP.
(b) GROUND CONNECTOR.
(c) GROUND ROD CONNECTOR.
(d) CABLE CONNECTOR.

GROUNDING OF ELECTRICAL / COMMUNICATION MANHOLES
N.T.S

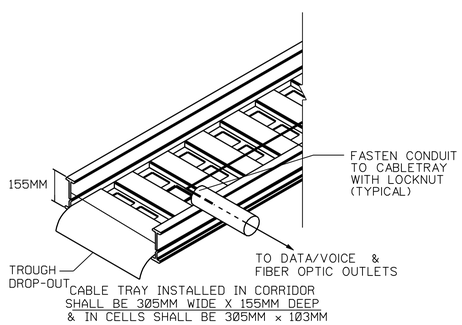

VENTED TROUGH TYPE CABLE TRAY DETAIL
NTS

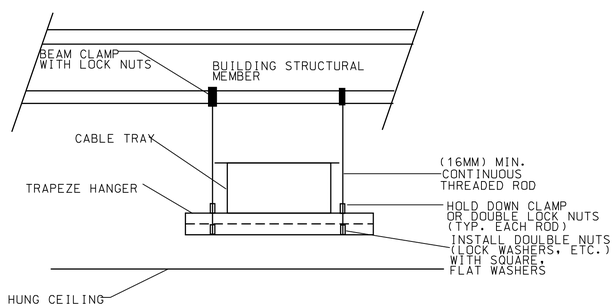

CABLE TRAY SUPPORT DETAIL
NTS

US Army Corps of Engineers
New York District

Mark	Date	Description	Mark	Date	Description

Designed by: | Date: | Sheet: All
Dwn by: | Ckd by: | Solicitation no.:
Reviewed by: | Contract no.:
Submitted by: | Rq date: 99-AUG-2005 00:00 | Plot date: 09-AUG-2005 | Plot by: | Scale: 1:00000/00000

U.S. ARMY ENGINEER DISTRICT
CORPS OF ENGINEERS
NEW YORK, NEW YORK

File name: S:\Resources\Military\Fort Drum\Force Mod\Electrical\90%Submittal\Specifications & Drawings

FORCE MODERNIZATION (TRADITIONAL) FACILITY
FY 07/08 (TRANSITIONAL FACILITY)
FORT DRUM, NEW YORK

FN: 57708

ELECTRICAL DETAILS III

Sheet reference number:
E-503

SUBMITTED BY: E3ENDSVC
S:\FILEROOM\MILITARY\FORT DRUM\FORCEMOD\ELECTRICAL\90%SUBMITTAL\SHEETFILES\FORCEMOD57708_E_503XXX.DGN
PLOT DATE: 09-AUG-2005 15:15

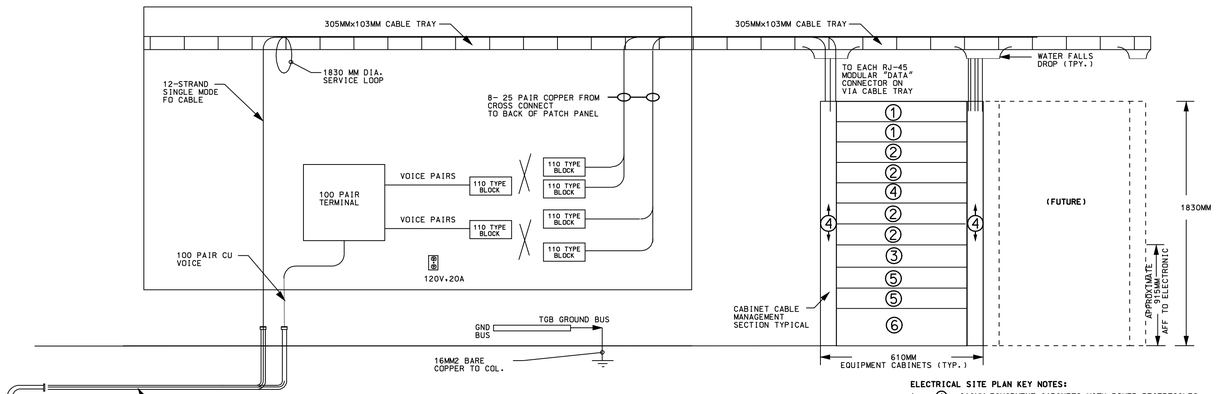

NOTE:
1. THE CONTRACTOR SHALL COORDINATE REQUIRED CROSS CONNECTIONS WITH LOCAL DIOM AND PROVIDE APPROPRATE RJ-45 PATCH CORDS IN ACCORDANCE TO SPECIFICATIONS.

ELECTRICAL SITE PLAN KEY NOTES:

1 - ① 610MM EQUIPMENT CABINETS WITH POWER RECEPTICLES AND COOLING FANS.
1 - ① 48 PORT CAT6 VOICE SERVICE LINES FROM 200 PAIR SERVICE ENTRANCE 110 BLOCTS WITH RJ-45 PATCH PANEL
4 - ② 48 PORT CAT6 (VOICE AND DATA) HORIZONTAL DROPS TO OUTLETS-RJ-45 PATCH PANEL
1 - ③ 12 PORT SC STYLE SINGLE MODE PATCH PANEL
1 - ④ CABLE MANAGEMENT SPACE PANEL TYP.
2 - ④ CABLE MANAGEMENT SPACE IN CABINETS TYP.
2 - ⑤ EQUIPMENT SPACE (DATA)
1 - ⑥ POWER EQUIPMENT SPACE (SUCH AS UPS ETC.)

DATA/VOICE CABINET LAYOUT - SECOND FLOOR COMM. ROOM
N.T.S.

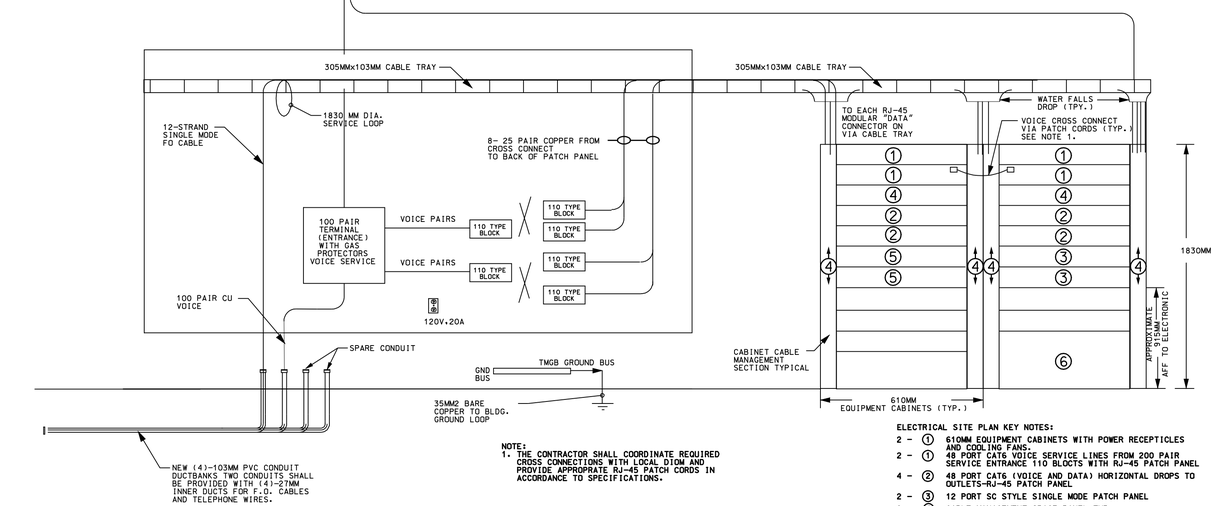

NOTE:
1. THE CONTRACTOR SHALL COORDINATE REQUIRED CROSS CONNECTIONS WITH LOCAL DIOM AND PROVIDE APPROPRATE RJ-45 PATCH CORDS IN ACCORDANCE TO SPECIFICATIONS.

ELECTRICAL SITE PLAN KEY NOTES:

2 - ① 610MM EQUIPMENT CABINETS WITH POWER RECEPTICLES AND COOLING FANS.
2 - ① 48 PORT CAT6 VOICE SERVICE LINES FROM 200 PAIR SERVICE ENTRANCE 110 BLOCTS WITH RJ-45 PATCH PANEL
4 - ② 48 PORT CAT6 (VOICE AND DATA) HORIZONTAL DROPS TO OUTLETS-RJ-45 PATCH PANEL
2 - ③ 12 PORT SC STYLE SINGLE MODE PATCH PANEL
2 - ④ CABLE MANAGEMENT SPACE PANEL TYP.
4 - ④ CABLE MANAGEMENT SPACE IN CABINETS TYP.
3 - ⑤ EQUIPMENT SPACE (DATA)
1 - ⑥ POWER EQUIPMENT SPACE (SUCH AS UPS ETC.)

DATA/VOICE CABINET LAYOUT - FIRST FLOOR COMM. ROOM
N.T.S.

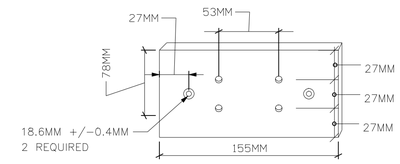

VEHICLE PAD GROUND BAR DETAIL
N.T.S.

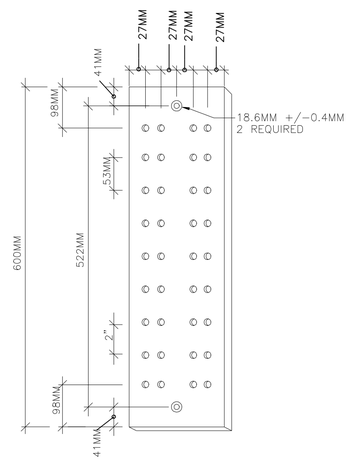

GROUND BAR DETAIL
N.T.S.

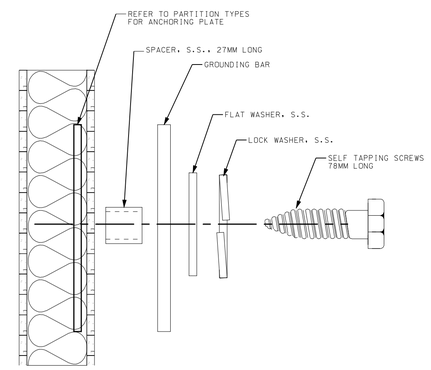

DRYWALL MOUNTING DETAIL
N.T.S.

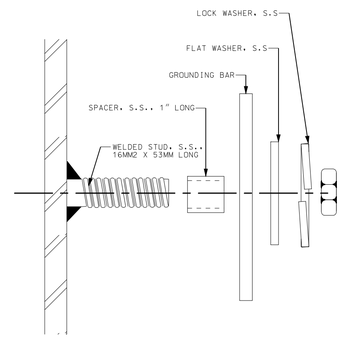

STEEL MOUNTING DETAIL
N.T.S.

NOTE: REFER TO ARCHITECTURAL DRAWINGS FOR ANCHOR PLATE DETAIL.

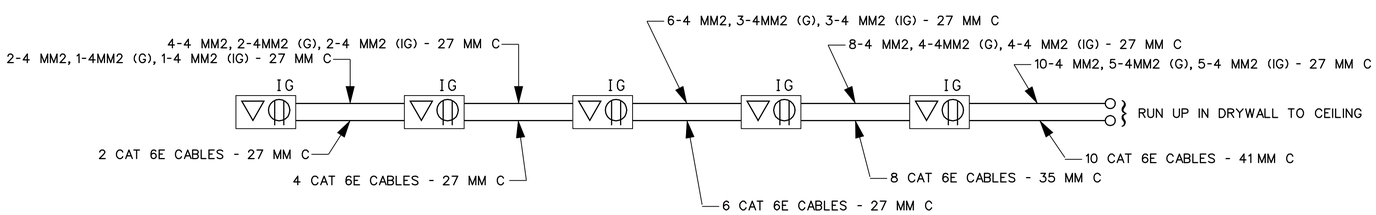

TYPICAL FLOOR BOX EMBEDDED CONDUIT & WIRING DIAGRAM FOR CLASSROOM WORKSTATIONS
N.T.S

US Army Corps of Engineers
New York District

Mark	Description	Date	Appr.

U.S. ARMY ENGINEER DISTRICT
CORPS OF ARMY ENGINEERS
NEW YORK, NEW YORK

Designed by: | Date: | Size: A1
Dwn by: | Ckd by: | Solicitation no.:
Reviewed by: | Contract no.:
Submitted by: | Rel date: 09-AUG-2005 15:15 | Plot Scale: 1 | Plot Date: 1/20/2001/20/2000

FORCE MODERNIZATION PN 57708
TRAINING FACILITY /TRANSITIONAL FACILITY
FORT DRUM, NEW YORK

ELECTRICAL DETAILS IV

Sheet reference number:
E-504

SUBMITTED BY: E3ENDSVC PLOT DATE: 09-AUG-2005 15:15
S:\FILEROOM\MILITARY\FORT DRUM\FORCEMOD\ELECTRICAL\90%SUBMITTAL\SHEETFILES\FORCEMOD57708_E-504XXX.DGN

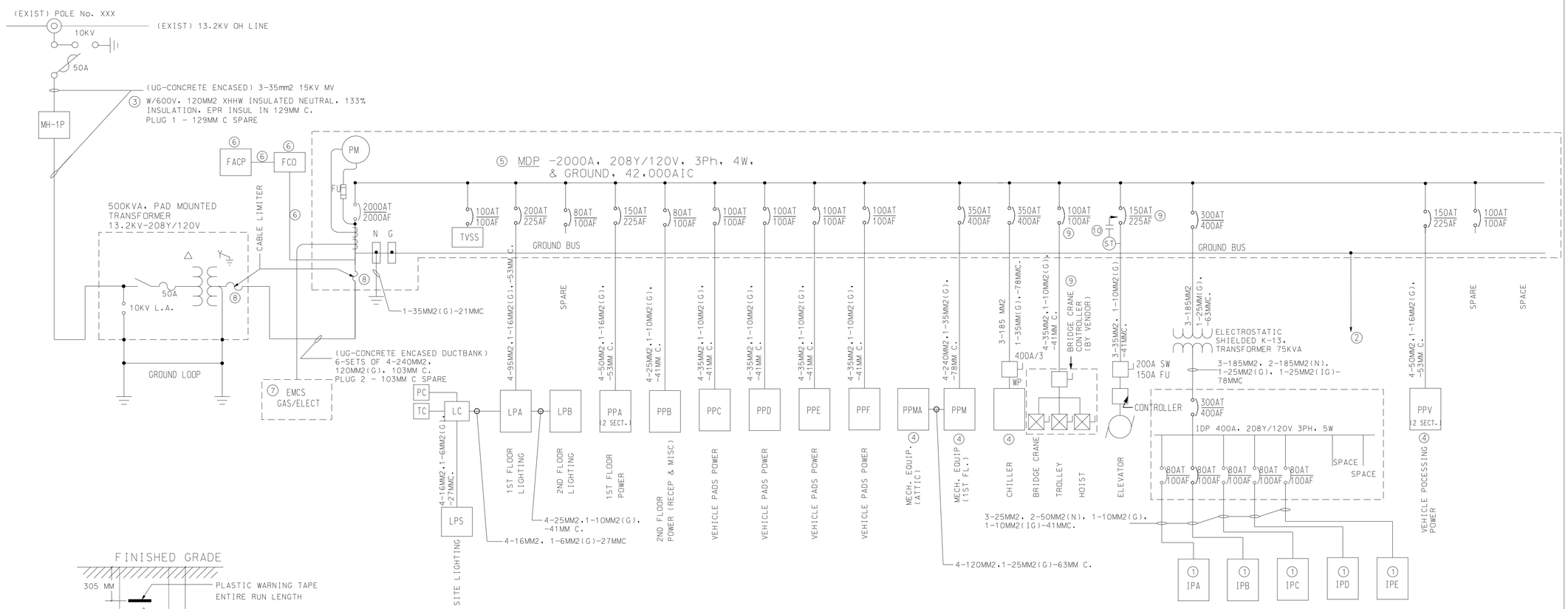

SINGLE LINE DIAGRAM

N.T.S.

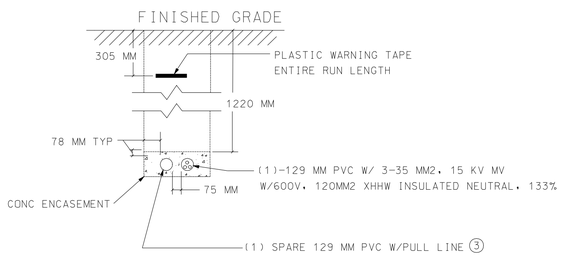

MEDIUM VOLTAGE DUCT

N.T.S.

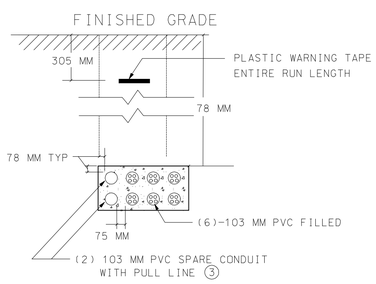

LOW VOLTAGE DUCTS

N.T.S.

GENERAL NOTES:

1. REFER TO MECHANICAL EQUIPMENT CONNECTION FOR FEEDER SIZES TO MECHANICAL EQUIPMENT.
2. REFER TO DWG E-107 & E-108 FOR ADDITIONAL GROUNDING INFORMATION AND REQUIREMENTS.
3. REFER TO PANEL SCHEDULES FOR THE CIRCUIT LOCATION OF LOADS SHOWN.
4. COMPUTER LOADS SHALL BE CONNECTED TO THE PANEL(S) SUPPORTED BY THE 'K' RATED TRANSFORMER.

KEY NOTES:

① ISOLATED GROUND BUS FROM PANELBOARDS SUPPORTED BY THE 'K' RATED TRANSFORMERS SHALL BE CONNECTED DIRECTLY TO THE GROUND BUS OF THE ELECTRICAL SERVICE SWITCHBOARD.

② SWITCHBOARD GROUND BUS SHALL BE BONDED TO THE 'STREET SIDE' OF THE INCOMING WATER SERVICE METER, AND BE CONNECTED TO BUILDING GROUND LOOP.

③ UNDERGROUND MEDIUM AND LOW VOLTAGE SERVICE DUCTS/RACEWAYS SHALL BE PROVIDED WITH SPARE DUCT(S) WITH PULL STRINGS. SPARE DUCT(S) SHALL BE CAPPED AT THE ENDS, INCLUDING IN THE HANDHOLES.

④ MOTOR STARTER PROVIDED WITH HVAC EQUIPMENT.

⑤ SWITCHBOARD SHALL BE PROVIDED WITH A NON-TAPERED COPPER BUS.

⑥ FIRE ALARM DISCONNECT SWITCH, FACP AND ITS RACEWAY SHALL BE PAINTED WITH RED ENAMEL PAINT.

⑦ PROVIDE WIRING TO DDC PANEL FOR REMOTE ELECTRIC METER MONITORING.

⑧ SECONDARY CABLES SHALL BE PROVIDED WITH LIMITERS AT THE LOW VOLTAGE SECTION OF THE OUTDOOR SERVICE TRANSFORMET AND AT THE SERVICE DISCONNECT SECTION OF THE SERVICE SWITCHBOARD IN THE ELECTRICAL ROOM.

⑨ COORDINATE WITH VENDOR'S EQUIPMENT SHOP DRAWING FOR EXACT WIRE SIZES AND BREAKER SIZE.

⑩ PROVIDE A SHUNT TRIP BREAKER FOR POWER SHUTDOWN OF ELEVATOR IN THE EVENT OF THE ACTIVATION OF SMOKE DETECTOR AND/OR HEAT DETECTOR IN THE ELEVATOR MACHINE ROOM.

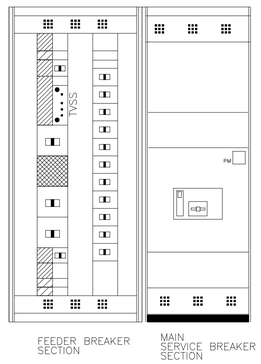

SERVICE SWITCHBOARD ELEVATION

N.T.S.

US Army Corps of Engineers
New York District

Mark	Description	Date	Appr.

Designed by: | Date: | Size: A1
Dwn by: | Ckd by: | Solicitation no.:
Reviewed by: | Contract no.:
Submitted by: | File name: S:\Resources\Military\FortDrum\Forcemod\Electrical\Forcemod\Fmd & E\Drawings\
Plot date: 09-AUG-2005 15:15
Plot by: eldridge
Scale: 1:XXXX/1:XXXX

U.S. ARMY ENGINEER DISTRICT
CORPS OF ENGINEERS
NEW YORK, NEW YORK

FORCE MODERNIZATION, BTA 70/70A, 77/TRANSITIONAL FACILITY
FN 5770
FORT DRUM, NEW YORK

SINGLE LINE DIAGRAM

Sheet reference number:
E-601

SUBMITTED BY: E3ENDSVC
S:\FILEROOM\MILITARY\FORT DRUM\FORCEMOD\ELECTRICAL\90%SUBMITTAL\SHEETFILES\FORCEMOD57708_E-601XXX.DGN
PLOT DATE: 09-AUG-2005 15:15

PANEL LPA — MOUNT SURFACE — LOCATION ELEC RM — MCB 200A

VOLTS 208Y/120 PHASE 3 WIRES 4 — AIC 25,000 (1ST FL) — BUS 225A

CIR. NO.	TRIP AMPS	NO. POLES	LOAD DESCRIPTION	CON.LOAD VA	CON.LOAD VA	LOAD DESCRIPTION	TRIP AMPS	NO. POLES	CIR. NO.
1	20	1	EMERG LTS & EXIT LTS	1345	1530	LTG-VEHICLE PROCESSING	20	1	2
3	20	1	EMERG LTS & EXIT LTS	1225	1780	LTG-VEHICLE PROCESSING	20	1	4
5	20	1	LTG - WAREHOUSE	765	1780	LTG-VEHICLE PROCESSING	20	1	6
7	20	1	LTG - WAREHOUSE	1275	1780	LTG-VEHICLE PROCESSING	20	1	8
9	20	1	LTG - WAREHOUSE	1275		SPARE	20	1	10
11	20	1	LTG - WAREHOUSE	1020		SPARE	20	1	12
13	20	1	LTG-ARMS VAULT ELEC	960		SPARE	20	1	14
15	20	1	LTG-OFFICES, COPY	1360		SPARE	20	1	16
17	20	1	LTG-OFFICES	800	1280	LTG-VEHICLE CLASSROOM	20	1	18
19	20	1	LTG-MENS, WOMENS, BREAK, COMM.	760	1280	LTG-VEHICLE CLASSROOM	20	1	20
21	20	1	LTG-MECHANICAL	640	960	LTG-OFFICES, CONFERENCE	20	1	22
23	20	1	LTG-CORRIDOR	400	680	LTG-TOOL, STORAGE, LOCKER	20	1	24
25	20	1	LTG-ELEVATOR	600		SPARE	20	1	26
27	20	1	LTG-ELEVATOR PIT LGT & RECEPT	350		SPARE	20	1	28
29	20	1	LTG-ELEVATOR ROOM			SPARE	20	1	30
31	20	1	SPARE			SPARE	20	1	32
33	20	1	SPARE			SPARE	20	1	34
35	20	1	SPARE			SPARE	20	1	36
37				5020	3880				38
39	70	3	PANEL LP-B	2160	3880	PANEL 'LPS' VIA LTG CONTACTOR	50	3	40
41				2200	3145				42

TOTAL CONNECTED LOAD(KVA) 44,130 DEMAND LOAD(KVA) 44,130

* PROVIDED WITH ISOLATED GROUND BUS AND 200% NEUTRAL
□ PROVIDED BREAKER WITH LOCK-ON DEVICE

PANEL (SECT 1) PPA — MOUNT SURFACE — LOCATION ELEC. ROOM — MCB 150A

2 SECTIONS WITH THRU-FEED LUG

VOLTS 208Y/120 PHASE 3 WIRES 5* — AIC 25,000 (1ST FL) — BUS 225A

CIR. NO.	TRIP AMPS	NO. POLES	LOAD DESCRIPTION	CON.LOAD VA	CON.LOAD VA	LOAD DESCRIPTION	TRIP AMPS	NO. POLES	CIR. NO.
1	20	1	RECEPT-MECHANICAL RM	720	1080	RECEPT-WAREHOUSE	20	1	2
3	20	1	RECEPT-STORAGE, TOOL, CORRIDOR, TOILETS	1080	1080	RECEPT-WAREHOUSE	20	1	4
5	20	1	RECEPT-OFFICES	900		SPARE	20	1	6
7	20	1	RECEPT-OFFICES	900		SPARE	20	1	8
9	20	1	RECEPT-OFFICES	1080		SPARE	20	1	10
11	20	1	RECEPT-OFFICES, BREAK ELECTRICAL	1200		SPARE	20	1	12
13	20	1	RECEPT-OFFICES, CORRI	1260	550	DOCK LEVELER	15	3	14
15	20	1	RECEPTACLE/OFFICES	1080	550		-	-	16
17	20	1	EF-2,3&5, UH-2&5	490	550		-	-	18
19	20	1	ARMS VAULT SECURITY	300	550	DOCK LEVELER	15	3	20
21	20	1	VEH. CR. SOUND SYSTEM	400	550		-	-	22
23	20	1	CUH-3	830	550		-	-	24
25	20	1	CUH-2&4	1520	550	DOCK LEVELER	15	3	26
27	20	1	CUH-1, EF-4&11	1190	550		-	-	28
29	20	1	UH-7,8&9,SF-1,EF-6&12	250	550		-	-	30
31	20	2	AC-1	60	5000	BATTERY CHARGER	60	2	32
33				60	5000		-	-	34
35	20	1	EF-1&10, UH-3&4	385	5000	BATTERY CHARGER	60	2	36
37	20	1	RECEPTACLE/OFFICES	1080	5000		-	-	38

PANEL (SECT2) PPA — MOUNT SURFACE — LOCATION ELEC. ROOM — MCB

VOLTS 208Y/120 PHASE 3 WIRES 5* — AIC 25,000 (1ST FL) — BUS 225A

CIR. NO.	TRIP AMPS	NO. POLES	LOAD DESCRIPTION	CON.LOAD VA	CON.LOAD VA	LOAD DESCRIPTION	TRIP AMPS	NO. POLES	CIR. NO.
39	20	1	RECEPTACLE/OFFICES	1260	300	OIL WATER SEPARATOR ALARM PANEL	20	1	40
41	20	1	RECEPTACLE/OFFICES	720		SPARE	20	1	42
43				550	276				44
45	20	3	DOOR OPERATOR (1 EA.)	550	276	SUMP PUMP	15	3	46
47				550	276				48
49				1100					50
51	20	3	DOOR OPERATOR (2 EA.)	1100		SLIDING GATE	20	3	52
53				1100					54
55	20	1	SPARE			SPARE	15	3	56
57	20	1	SPARE				-	-	58
59	20	1	SPARE				-	-	60
61	20	1	SPARE			SPARE	15	3	62
63	20	1	SPARE				-	-	64
65	20	1	SPARE				-	-	66
67			SPACE			SPACE			68
69			SPACE			SPACE			70
71			SPACE			SPACE			72

TOTAL CONNECTED LOAD(KVA) 49.5 DEMAND LOAD(KVA) 26.6

PANEL LPB — MOUNT SURFACE — LOCATION ELEC. ROOM — MCB 70A

VOLTS 208Y/120 PHASE 3 WIRES 4 — AIC 25,000 (2ND FL) — BUS 100A

CIR. NO.	TRIP AMPS	NO. POLES	LOAD DESCRIPTION	CON.LOAD VA	CON.LOAD VA	LOAD DESCRIPTION	TRIP AMPS	NO. POLES	CIR. NO.
1	20	1	EMERG LTG	340	1840	LTG-CLASSROOM 205	20	1	2
3	20	1	LTG-CORRIDOR	320	1840	LTG-CLASSROOM 207	20	1	4
5	20	1	LTG-BREAK, STORAGE, TOILETS, COMM	960	1240	LTG-CLASSROOM 208	20	1	6
7	20	1	LTG-OFFICES, CONF, JAN	1600	1240	LTG-CLASSROOM 209	20	1	8
9	20	1	SPARE			SPARE	20	1	10
11	20	1	SPARE			SPARE	20	1	12
13	20	1	SPARE			SPARE	20	1	14
15	20	1	SPARE			SPARE	20	1	16
17	20	1	SPARE			SPARE	20	1	18
19			SPACE			SPACE			20
21			SPACE			SPACE			22
23			SPACE			SPACE			24

TOTAL CONNECTED LOAD(KVA) 9.38 DEMAND LOAD(KVA) 9.38

PANEL PPB — MOUNT SURFACE — LOCATION ELEC. ROOM — MCB 80A

VOLTS 208Y/120 PHASE 3 WIRES 4 — AIC 25,000 (2ND FL) — BUS 100A

CIR. NO.	TRIP AMPS	NO. POLES	LOAD DESCRIPTION	CON.LOAD VA	CON.LOAD VA	LOAD DESCRIPTION	TRIP AMPS	NO. POLES	CIR. NO.
1	20	1	RECEPT-OFFICE	900	600	RECEPT-EWC	20	1	2
3	20	1	RECEPT-OFFICE	1260	720	RECEPT-MENS	20	1	4
5	20	1	SPARE		540	RECEPT-LADIES, CORRI	20	1	6
7	20	1	RECEPT-CLASSROOM 205	720	900	RECEPT-CONF, STORAGE	20	1	8
9	20	1	RECEPT-CLASSROOM 205	540	900	RECEPT-CLASSROOM 208	20	1	10
11	20	1	RECEPT-CLASSROOM 207	720	720	RECEPT-CLASSROOM 208	20	1	12
13	20	1	RECEPT-CLASSROOM 207	540	720	RECEPT-CLASSROOM 209	20	1	14
15	20	1	EF-7,8&9	390	720	RECEPT-CLASSROOM 209	20	1	16
17	20	1	AC-2	60	900	RECEPTACLES	20	1	18
19				60	900	RECEPTACLES	20	1	20
21	20	1	SPARE			SPARE	20	1	22
23	20	1	SPARE			SPARE	20	1	24
25	20	1	SPARE			SPARE	20	1	26
27	20	1	SPARE			SPARE	20	1	28
29	20	1	SPARE			SPARE	20	1	30
31	20	1	SPARE			SPARE	20	1	32
33	20	1	SPARE			SPARE	20	1	34
35	20	1	SPARE			SPARE	20	1	36

TOTAL CONNECTED LOAD(KVA) 12.8 DEMAND LOAD(KVA) 6.4

PANEL PPC* — MOUNT SURFACE — LOCATION EXTERIOR — MCB 100A

VOLTS 208Y/120 PHASE 3 WIRES 4 — AIC 25,000 — BUS 100A

CIR. NO.	TRIP AMPS	NO. POLES	LOAD DESCRIPTION	CON.LOAD VA	CON.LOAD VA	LOAD DESCRIPTION	TRIP AMPS	NO. POLES	CIR. NO.
1	20	1	VEHICLE PAD			VEHICLE PAD	60	3	2
3	100	2	VEHICLE PAD			-	-	-	4
5	-	-				-	-	-	6
7			SPACE			SPACE			8
9			SPACE			SPACE			10
11			SPACE			SPACE			12

TOTAL CONNECTED LOAD(KVA) 35.4 DEMAND LOAD(KVA) 16.6

* NEMA 3R ENCLOSURE. PROVIDE SUPPORTING CHANNELS FOR PANEL.

PANEL PPD* — MOUNT SURFACE — LOCATION EXTERIOR — MCB 100A

VOLTS 208Y/120 PHASE 3 WIRES 4 — AIC 25,000 — BUS 100A

CIR. NO.	TRIP AMPS	NO. POLES	LOAD DESCRIPTION	CON.LOAD VA	CON.LOAD VA	LOAD DESCRIPTION	TRIP AMPS	NO. POLES	CIR. NO.
1	20	1	VEHICLE PAD			VEHICLE PAD	60	3	2
3	100	2	VEHICLE PAD			-	-	-	4
5	-	-				-	-	-	6
7			SPACE			SPACE			8
9			SPACE			SPACE			10
11			SPACE			SPACE			12

TOTAL CONNECTED LOAD(KVA) 35.4 DEMAND LOAD(KVA) 16.6

* NEMA 3R ENCLOSURE. PROVIDE SUPPORTING CHANNELS FOR PANEL.

US Army Corps of Engineers
New York District

No.	Description	Date	Appr.

Designed by: Date: Size: A/E
Dwn by: Chd by: Solicitation no.:
Reviewed by: Contract no.:
Submitted by: Plot date: 09-AUG-2005 15:15 Plot by: E3NDSVC Scale: 100.000000:100.000
File name: S:\FILEROOM\MILITARY\FORT DRUM\FORCEMOD\ELECTRICAL\90%SUBMITTAL\SHEETFILES\FORCEMOD57708_E-602XXX.DGN

U.S. ARMY ENGINEER DISTRICT
CORPS OF ENGINEERS
NEW YORK, NEW YORK

FN 5708
FORCE MODERNIZATION STRUCTURAL /TRANSITIONAL FACILITY
FORT DRUM, NEW YORK

PANEL SCHEDULES I

Sheet reference number:
E-602

SUBMITTED BY: E3NDSVC
S:\FILEROOM\MILITARY\FORT DRUM\FORCEMOD\ELECTRICAL\90%SUBMITTAL\SHEETFILES\FORCEMOD57708_E-602XXX.DGN
PLOT DATE: 09-AUG-2005 15:15

PANEL PPE — MOUNT SURFACE — LOCATION EXTERIOR — MCB 100A

VOLTS 208Y/120 PHASE 3 WIRES 4 — AIC 25,000 — BUS 100A

CIR. NO.	TRIP AMPS	NO. POLES	LOAD DESCRIPTION	CON.LOAD VA	CON.LOAD VA	LOAD DESCRIPTION	TRIP AMPS	NO. POLES	CIR. NO.
1	20	1	VEHICLE PAD			VEHICLE PAD	60	3	2
3	100	2	VEHICLE PAD			-	-	-	4
5	-	-				-	-	-	6
7			SPACE			SPACE			8
9			SPACE			SPACE			10
11			SPACE			SPACE			12

TOTAL CONNECTED LOAD(KVA) 35.4 — DEMAND LOAD(KVA) 16.6

PANEL PPF — MOUNT SURFACE — LOCATION EXTERIOR — MCB 100A

VOLTS 208Y/120 PHASE 3 WIRES 4 — AIC 25,000 — BUS 100A

CIR. NO.	TRIP AMPS	NO. POLES	LOAD DESCRIPTION	CON.LOAD VA	CON.LOAD VA	LOAD DESCRIPTION	TRIP AMPS	NO. POLES	CIR. NO.
1	20	1	VEHICLE PAD			VEHICLE PAD	60	3	2
3	100	2	VEHICLE PAD			-	-	-	4
5	-	-				-	-	-	6
7			SPACE			SPACE			8
9			SPACE			SPACE			10
11			SPACE			SPACE			12

TOTAL CONNECTED LOAD(KVA) 35.4 — DEMAND LOAD(KVA) 16.6

PANEL PPM — MOUNT SURFACE — LOCATION ROOM 114 — MCB -

VOLTS 208Y/120 PHASE 3 WIRES 4 — AIC 25,000 — BUS 400A

CIR. NO.	TRIP AMPS	NO. POLES	LOAD DESCRIPTION	CON.LOAD VA	CON.LOAD VA	LOAD DESCRIPTION	TRIP AMPS	NO. POLES	CIR. NO.
1				3530	3530				2
3	40	3	P-1	3530	3530	P-2	20	3	4
5				3530	3530				6
7				2100	2100				8
9	40	3	P-3	2100	2100	P-4	20	3	10
11				2100	2100				12
13				3530	3530				14
15	25	3	P-5	3530	3530	P-6	25	3	16
17				3530	3530				18
19				720	720				20
21	15	3	P-7	720	720	P-8	20	3	22
23				720	720				24
25	20	1	SPARE						26
27	20	1	SPARE			SPARE	15	3	28
29	20	1	SPARE						30
31	20	1	BOILER B-1 & B-2	200					32
33	20	1	GMP-1	860		SPARE	15	3	34
35	20	2	DX-1	1380					36
37				1380	17944				38
39	20	2	DX-2	1380	17964	PANEL PP-MA	225	3	40
41				1380	17144				42

TOTAL CONNECTED LOAD(KVA) 118.9 — DEMAND LOAD(KVA) 88

PANEL PP-V — MOUNT SURFACE — LOCATION VEHICLE PROCESSING — MCB 150A

(2 SECTIONS, THROUGH FEED LUGS)

VOLTS 208Y/120 PHASE 3 WIRES 4 — AIC 25,000 — BUS 225A

CIR. NO.	TRIP AMPS	NO. POLES	LOAD DESCRIPTION	CON.LOAD VA	CON.LOAD VA	LOAD DESCRIPTION	TRIP AMPS	NO. POLES	CIR. NO.
1	20	3	DOOR OPERATORS (2 EA)	1100	1100	DOOR OPERATORS (2 EA)	20	3	2
3	-	-		1100	1100	-	-	-	4
5	-	-		1100	1100	-	-	-	6
7	20	3	DOOR OPERATORS (2 EA)	1100	1100	DOOR OPERATORS (2 EA)	20	3	8
9	-	-		1100	1100	-	-	-	10
11	-	-		1100	1100	-	-	-	12
13	20	3	DOOR OPERATORS (2 EA)	1100	1000	MOTORIZED EXH HOSE REEL (2 EA)	20	1	14
15	-	-		1100	1000	MOTORIZED EXH HOSE REEL (2 EA)	20	1	16
17	-	-		1100	1000	MOTORIZED EXH HOSE REEL (2 EA)	20	1	18
19	20	1	RECEPTACLES	720	1000	MOTORIZED EXH HOSE REEL (2 EA)	20	1	20
21	20	1	RECEPTACLES	720	1000	MOTORIZED EXH HOSE REEL (2 EA)	20	1	22
23	20	1	RECEPTACLES	720	1000	MOTORIZED EXH HOSE REEL (2 EA)	20	1	24
25	20	1	RECEPTACLES	720	1000	MOTORIZED EXH HOSE REEL (2 EA)	20	1	26
27	20	1	RECEPTACLES	720	1000	MOTORIZED EXH HOSE REEL (2 EA)	20	1	28
29	20	1	RECEPTACLES	1440		SPARE	20	1	30
31	20	1	RECEPTACLES	720	1270				32
33	20	1	RECEPTACLES	720	1270	COEF-1	25	3	34
35	20	1	RECEPTACLES	720	1270				36

PANEL PP-V — MOUNT SURFACE — LOCATION VEHICLE PROCESSING — MCB -

(2 SECTIONS, THROUGH FEED LUGS)

VOLTS 208Y/120 PHASE 3 WIRES 4 — AIC 25,000 — BUS 225A

CIR. NO.	TRIP AMPS	NO. POLES	LOAD DESCRIPTION	CON.LOAD VA	CON.LOAD VA	LOAD DESCRIPTION	TRIP AMPS	NO. POLES	CIR. NO.
37	20	1	RECEPTACLES	1440	1270				38
39	20	1	BURNERS	200	1270	COEF-2	25	3	40
41	20	1	RECEPTACLE	720	1270				42
43				1270	2100				44
45	25	3	COEF-3	1270	2100	AIR COMPRESSOR	40	3	46
47				1270	2100				48
49				1270					50
51	25	3	COEF-4	1270		SPARE	25	3	52
53				1270					54
55									56
57	20	3	spare			spare	20	3	58
59									60
61	20	1	spare			spare	20	1	62
63	20	1	spare			spare	20	1	64
65	20	1	spare			spare	20	1	66
67	20	1	spare			spare	20	1	68
69	20	1	spare			spare	20	1	70
71	20	1	spare			spare	20	1	72

TOTAL CONNECTED LOAD(KVA) 55.6 — DEMAND LOAD(KVA) 33.3

PANEL PPMA — MOUNT SURFACE — LOCATION ATTIC — MCB 225A

VOLTS 208Y/120 PHASE 3 WIRES 4 — AIC 25,000 — BUS 225A

CIR. NO.	TRIP AMPS	NO. POLES	LOAD DESCRIPTION	CON.LOAD VA	CON.LOAD VA	LOAD DESCRIPTION	TRIP AMPS	NO. POLES	CIR. NO.
1				4100	5100				2
3	60	3	AHU-1	4100	5100	AHU-2	100	3	4
5				4100	5100				6
7				2100	2100				8
9	40	3	MAU-1	2100	2100	MAU-2	40	3	10
11				2100	2100				12
13				936	936				14
15	20	3	EF-13	936	936	EF-14	20	3	16
17				936	936				18
19				936	936				20
21	20	3	EF-15	936	936	EF-16	20	3	22
23				936	936				24
25	20	1	RECEPTACLE-ATTIC	800					26
27	20	1	RECEPTACLE-ATTIC	1000		SPARE	20	3	28
29	20	1	SPARE						30
31	20	1	SPARE						32
33	20	1	SPARE			SPARE	20	3	34
35	20	1	SPARE						36
37			SPACE			SPACE			38
39			SPACE			SPACE			40
41			SPACE			SPACE			42

TOTAL CONNECTED LOAD(KVA) 52.2 — DEMAND LOAD(KVA) 44.4

PANEL IDP — MOUNT SURFACE — LOCATION ROMM 114 — MCB 300A

VOLTS 208Y/120 PHASE 3 WIRES 5* — AIC 25,000 — BUS 400A

CIR. NO.	TRIP AMPS	NO. POLES	LOAD DESCRIPTION	CON.LOAD VA	CON.LOAD VA	LOAD DESCRIPTION	TRIP AMPS	NO. POLES	CIR. NO.
1				6400	4800				2
3	80	3	PANEL IPA	4800	4000	PANEL IPB	80	3	4
5				4800	4000				6
7				7200	9000				8
9	80	3	PANEL IPC	6000	7800	PANEL IPD	80	3	10
11				6000	6000				12
13				6600					14
15	80	3	PANEL IPE	7800		SPARE	80	3	16
17				6600					18
19 TO 23			SPACE			SPACE		20 TO 24	

TOTAL CONNECTED LOAD(KVA) 91.8 — DEMAND LOAD(KVA) 71.8

* PROVIDE WITH ISOLATED GROUND BUS AND 200% NEUTRAL

PANEL IPA — MOUNT SURFACE — LOCATION ROOM 205 — MCB 80A

VOLTS 208Y/120 PHASE 3 WIRES 5* — AIC 10,000 — BUS 100A

CIR. NO.	TRIP AMPS	NO. POLES	LOAD DESCRIPTION	CON.LOAD VA	CON.LOAD VA	LOAD DESCRIPTION	TRIP AMPS	NO. POLES	CIR. NO.
1	20	1	RECEPTACLES - RM 205	800	800	RECEPTACLES - RM 205	20	1	2
3	20	1	RECEPTACLES - RM 205	800	800	RECEPTACLES - RM 205	20	1	4
5	20	1	RECEPTACLES - RM 205	800	800	RECEPTACLES - RM 205	20	1	6
7	20	1	RECEPTACLES - RM 205	800	800	RECEPTACLES - RM 205	20	1	8
9	20	1	RECEPTACLES - RM 205	800	800	RECEPTACLES - RM 205	20	1	10
11	20	1	RECEPTACLES - RM 205	800	800	RECEPTACLES - RM 205	20	1	12
13	20	1	RECEPTACLES - RM 205	800	800	RECEPTACLES - RM 213	20	1	14
15	20	1	RECEPTACLES - RM 205	800	800	RECEPTACLES - RM 217	20	1	16
17	20	1	RECEPTACLES - RM 205	800	800	RECEPTACLES - RM 216	20	1	18
19	20	1	RECEPTACLES - RM 205	800	800	RECEPTACLES - RM 216	20	1	20
21	20	1	SPARE			SPARE	20	1	22
23	20	1	SPARE			SPARE	20	1	24
25 TO 29			SPACE			SPACE		26 TO 30	

TOTAL CONNECTED LOAD(KVA) 16 — DEMAND LOAD(KVA) 14.4

* PROVIDE WITH ISOLATED GROUND BUS AND 200% NEUTRAL

US Army Corps of Engineers
New York District

Mark	Description	Date	Appr.

Designed by: — Date: — Size: A1
Dwn by: — Ckd by: — Solicitation no.:
Reviewed by: — Contract no.:
Submitted by: — Plot date: 09-AUG-2005 15:15; Plot by: ADMINISTRATOR; Scale: 00.000000:1.000000
File name: S:\Resources\Projects\Active\FORCEMOD\Submittals\Sheets\Production\PPM & 400A.dgn

U.S. ARMY ENGINEER DISTRICT
NEW YORK, NEW YORK
NEW YORK, NEW YORK

FORCE MODERNIZATION FN 5708
FORT DRUM TRANSITIONAL FACILITY
FORT DRUM, NEW YORK

PANEL SCHEDULES II

Sheet reference number:
E-603

SUBMITTED BY: E3ENDSVC
S:\FILEROOM\MILITARY\FORT DRUM\FORCEMOD\ELECTRICAL\90%SUBMITTAL\SHEETFILES\FORCEMOD57708_E_603XXX.DGN
PLOT DATE: 09-AUG-2005 15:15

PANEL SCHEDULES III

PANEL IPB

PANEL IPB MOUNT SURFACE LOCATION ROOM 207 MCB 80A
VOLTS 208Y/120 PHASE 3 WIRES 5* AIC 10,000 BUS 100A

CIR. NO.	TRIP AMPS	NO. POLES	LOAD DESCRIPTION	CON.LOAD VA	CON.LOAD VA	LOAD DESCRIPTION	TRIP AMPS	NO. POLES	CIR. NO.
1	20	1	RECEPTACLES - RM 207	800	800	RECEPTACLES - RM 207	20	1	2
3	20	1	RECEPTACLES - RM 207	800	800	RECEPTACLES - RM 207	20	1	4
5	20	1	RECEPTACLES - RM 207	800	800	RECEPTACLES - RM 207	20	1	6
7	20	1	RECEPTACLES - RM 207	800	800	RECEPTACLES - RM 207	20	1	8
9	20	1	RECEPTACLES - RM 207	800	800	RECEPTACLES - RM 207	20	1	10
11	20	1	RECEPTACLES - RM 207	800	800	RECEPTACLES - RM 207	20	1	12
13	20	1	RECEPTACLES - RM 207	800		SPARE	20	1	14
15	20	1	RECEPTACLES - RM 207	800		SPARE	20	1	16
17	20	1	RECEPTACLES - RM 207	800		SPARE	20	1	18
19	20	1	RECEPTACLES - RM 207	800		SPARE	20	1	20
21	20	1	SPARE			SPARE	20	1	22
23	20	1	SPARE			SPARE	20	1	24
25			SPACE			SPACE	20	1	26
27			SPACE			SPACE	20	1	28
29			SPACE			SPACE	20	1	30

TOTAL CONNECTED LOAD(KVA) 12.8 DEMAND LOAD(KVA) 11.5

* PROVIDE WITH ISOLATED GROUND BUS AND 200% NEUTRAL

PANEL IPC

PANEL IPC MOUNT SURFACE LOCATION ROOM 203 MCB 80A
VOLTS 208Y/120 PHASE 3 WIRES 5* AIC 10,000 BUS 100A

CIR. NO.	TRIP AMPS	NO. POLES	LOAD DESCRIPTION	CON.LOAD VA	CON.LOAD VA	LOAD DESCRIPTION	TRIP AMPS	NO. POLES	CIR. NO.
1	20	1	RECEPTACLES - RM 208	1200	1200	RECEPTACLES - RM 208	20	1	2
3	20	1	RECEPTACLES - RM 208	1200	1200	RECEPTACLES - RM 208	20	1	4
5	20	1	RECEPTACLES - RM 208	1200	1200	RECEPTACLES - RM 208	20	1	6
7	20	1	RECEPTACLES - RM 208	1200	1200	RECEPTACLES - RM 208	20	1	8
9	20	1	RECEPTACLES - RM 208	1200	1200	RECEPTACLES - RM 208	20	1	10
11	20	1	RECEPTACLES - RM 208	1200	1200	RECEPTACLES - RM 215	20	1	12
13	20	1	RECEPTACLES - RM 208	1200		SPARE	20	1	14
15	20	1	RECEPTACLES - RM 208	1200		SPARE	20	1	16
17	20	1	RECEPTACLES-RM 215/216	1200		SPARE	20	1	18
19	20	1	RECEPTACLES-RM 215/216	1200		SPARE	20	1	20
21	20	1	SPARE			SPARE	20	1	22
23	20	1	SPARE			SPARE	20	1	24

TOTAL CONNECTED LOAD(KVA) 19.2 DEMAND LOAD(KVA) 17.3

* PROVIDE WITH ISOLATED GROUND BUS AND 200% NEUTRAL

PANEL IPD

PANEL IPD MOUNT SURFACE LOCATION ROOM 203 MCB 80A
VOLTS 208Y/120 PHASE 3 WIRES 5* AIC 10,000 BUS 100A

CIR. NO.	TRIP AMPS	NO. POLES	LOAD DESCRIPTION	CON.LOAD VA	CON.LOAD VA	LOAD DESCRIPTION	TRIP AMPS	NO. POLES	CIR. NO.
1	20	1	RECEPTACLES - RM 209	1200	1200	RECEPTACLES - RM 209	20	1	2
3	20	1	RECEPTACLES - RM 209	1200	1200	RECEPTACLES - RM 209	20	1	4
5	20	1	RECEPTACLES - RM 209	1200	1200	RECEPTACLES - RM 209	20	1	6
7	20	1	RECEPTACLES - RM 209	1200	1200	RECEPTACLES - RM 209	20	1	8
9	20	1	RECEPTACLES - RM 209	1200	1200	RECEPTACLES - RM 209	20	1	10
11	20	1	RECEPTACLES - RM 209	1200	1200	COMM. EQUIP. CABINET	20	1	12
13	20	1	RECEPTACLES - RM 209	1200	1800	RECEPTACLES-RM 213	20	1	14
15	20	1	RECEPTACLES - RM 209	1200	1800	RECEPTACLES-RM 217	20	1	16
17	20	1	RECEPTACLES-COMM. RM.	1200		SPARE	20	1	18
19	20	1	RECEPTACLES-COMM. RM.	1200		SPARE	20	1	20
21	20	1	SPARE			SPARE	20	1	22
23	20	1	SPARE			SPARE	20	1	24

TOTAL CONNECTED LOAD(KVA) 22.8 DEMAND LOAD(KVA) 20.5

* PROVIDE WITH ISOLATED GROUND BUS AND 200% NEUTRAL

MECHANICAL EQUIPMENT CONNECTIONS SCHEDULE

EQUIP. DESIGNATION	DESCRIPTION	ELECTRICAL REQUIREMENTS: VOLTS	KW/HP	FLA	PANEL	CB (A)	POWER WIRING/CONDUIT	REMARKS
CH-1	CHILLER - EXTERIOR	208V/3ϕ			MDP	350 A/3P	3-185MM2, 1-35MM2(G)-78MMC	60 TON
AHU-1	AIR HANDLING UNIT - ATTIC	208V/3ϕ	S. 5HP R. 5HP		PPMA	60 A/3P	3-10MM2, 1-6MM2(G)-21MMC	
AHU-2	AIR HANDLING UNIT - ATTIC	208V/3ϕ	S. 10HP R. 7.5HP		PPMA	100 A/3P	3-25MM2, 1-10MM2(G)-27MMC	
AC-1	AIR CONDITIONING UNIT	208V/1ϕ		.5 FLA	PPA	20 A/2P	2-4MM2, 1-4MM2(G)-21MMC	
AC-2	AIR CONDITIONING UNIT	208V/1ϕ		.5 FLA	PPB	20 A/2P	2-4MM2, 1-4MM2(G)-21MMC	
DX-1	CONDENSING UNIT - EXTERIOR	208V/1ϕ		11.5 RLA	PPM	20 A/2P	2-4MM2, 1-4MM2(G)-21MMC	
DX-2	CONDENSING UNIT - EXTERIOR	208V/1ϕ		11.5 RLA	PPM	20 A/2P	2-4MM2, 1-4MM2(G)-21MMC	
GMP-1	GLYCOL MAKE-UP PKG - MECH. RM.	120V/1ϕ	0.25 KW		PPM	20 A/1P	2-4MM2, 1-4MM2(G)-21MMC	
P-1	HOT WATER PUMP - MECH. RM.	208V/3ϕ	5.625 KW		PPM	40 A/3P	3-6MM2, 1-6MM2(G)-21MMC	
P-2	HOT WATER PUMP - MECH. RM.	208V/3ϕ	5.625 KW		PPM	40 A/3P	3-6MM2, 1-6MM2(G)-21MMC	
P-3	HOT WATER PUMP - MECH. RM.	208V/3ϕ	3.73 KW		PPM	20 A/3P	3-4MM2, 1-4MM2(G)-21MMC	
P-4	HOT WATER PUMP - MECH. RM.	208V/3ϕ	3.73 KW		PPM	20 A/3P	3-4MM2, 1-4MM2(G)-21MMC	
P-5	CHILLED WATER PUMP - MECH. RM.	208V/3ϕ	5.625 KW		PPM	25 A/3P	3-4MM2, 1-4MM2(G)-21MMC	
P-6	CHILLED WATER PUMP - MECH. RM.	208V/3ϕ	5.625 KW		PPM	25 A/3P	3-4MM2, 1-4MM2(G)-21MMC	
P-7	BOILER CIRC PUMP - MECH. RM.	208V/3ϕ	1.11 KW		PPM	20 A/3P	3-4MM2, 1-4MM2(G)-21MMC	
P-8	BOILER CIRC PUMP - MECH. RM.	208V/3ϕ	1.11 KW		PPM	20 A/3P	3-4MM2, 1-4MM2(G)-21MMC	
B-1	BOILER - MECH. RM.	120V/1ϕ			PPM	20 A/1P	2-4MM2, 1-4MM2(G)-21MMC	
B-2	BOILER - MECH. RM.	120V/1ϕ			PPM	20 A/1P	2-4MM2, 1-4MM2(G)-21MMC	
COEF-1	VEHICLE EXHAUST FAN - VEH. PROC.	208V/3ϕ	2.2 KW		PPV	25 A/3P	3-4MM2, 1-4MM2(G)-21MMC	
COEF-2	VEHICLE EXHAUST FAN - VEH. PROC.	208V/3ϕ	2.2 KW		PPV	25 A/3P	3-4MM2, 1-4MM2(G)-21MMC	
COEF-3	VEHICLE EXHAUST FAN - VEH. PROC.	208V/3ϕ	2.2 KW		PPV	25 A/3P	3-4MM2, 1-4MM2(G)-21MMC	
COEF-4	VEHICLE EXHAUST FAN - VEH. PROC.	208V/3ϕ	2.2 KW		PPV	25 A/3P	3-4MM2, 1-4MM2(G)-21MMC	
CUH-1	CABINET UNIT HEATER - VEST.	120V/1ϕ	0.831 KW		PPA	20 A/1P	2-4MM2, 1-4MM2(G)-21MMC	
CUH-2	CABINET UNIT HEATER - LOBBY	120V/1ϕ	0.688 KW		PPA	20 A/1P	2-4MM2, 1-4MM2(G)-21MMC	
CUH-3	CABINET UNIT HEATER - STAIR # 2	120V/1ϕ	0.831 KW		PPA	20 A/1P	2-4MM2, 1-4MM2(G)-21MMC	
CUH-4	CABINET UNIT HEATER - STAIR # 1	120V/1ϕ	0.831 KW		PPA	20 A/1P	2-4MM2, 1-4MM2(G)-21MMC	
UH-1 THRU UH-6	UNIT HEATER	120V/1ϕ	9W EA. 99W		PPA	20 A/1P	2-4MM2, 1-4MM2(G)-21MMC	
UH-7 THRU UH-12	UNIT HEATER	120V/1ϕ	9W EA. 18W		PPMA	20 A/1P	2-4MM2, 1-4MM2(G)-21MMC	
EF-1	EXHAUST FAN ROOM 110	120V/1ϕ	84W		PPA	20 A/1P	2-4MM2, 1-4MM2(G)-21MMC	
EF-2	EXHAUST FAN ROOM 115	120V/1ϕ	344W		PPA	20 A/1P	2-4MM2, 1-4MM2(G)-21MMC	
EF-4	EXHAUST FAN ROOM 124	120V/1ϕ	83W		PPA	20 A/1P	2-4MM2, 1-4MM2(G)-21MMC	
EF-6	EXHAUST FAN ROOM 114	120V/1ϕ	132W		PPA	20 A/1P	2-4MM2, 1-4MM2(G)-21MMC	
EF-7	EXHAUST FAN 2ND FL. ROOM 219	120V/1ϕ	344W		PPB	20 A/1P	2-4MM2, 1-4MM2(G)-21MMC	
EF-10	EXHAUST FAN ROOM 105	120V/1ϕ	273W		PPA	20 A/1P	2-4MM2, 1-4MM2(G)-21MMC	
EF-11	EXHAUST FAN ROOM 104	120V/1ϕ	273W		PPA	20 A/1P	2-4MM2, 1-4MM2(G)-21MMC	
EF-13	EXHAUST FAN ATTIC	208V/3ϕ	1.425 KW		PPMA	20 A/3P	3-4MM2, 1-4MM2(G)-21MMC	
EF-14	EXHAUST FAN ATTIC	208V/3ϕ	1.425 KW		PPMA	20 A/3P	3-4MM2, 1-4MM2(G)-21MMC	
EF-15	EXHAUST FAN ATTIC	208V/3ϕ	1.425 KW		PPMA	20 A/3P	3-4MM2, 1-4MM2(G)-21MMC	
EF-16	EXHAUST FAN ATTIC	208V/3ϕ	1.425 KW		PPMA	20 A/3P	3-4MM2, 1-4MM2(G)-21MMC	
MAU-1	MAKE-UP AIR UNIT ATTIC	208V/3ϕ	3.73 KW		PPMA	40 A/3P	3-6MM2, 1-6MM2(G)-21MMC	
MAU-2	MAKE-UP AIR UNIT ATTIC	208V/3ϕ	3.73 KW		PPMA	40 A/3P	3-6MM2, 1-6MM2(G)-21MMC	
SF-1	SUPPLY FAN - ELEC. RM.	120V/1ϕ	.164 KW		PPA	20 A/1P	2-4MM2, 1-4MM2(G)-21MMC	
	AIR COMPRESSOR	208V/3ϕ	3.73KW		PPV	40A/3P	3-6MM2, 1-6MM2(G)-21MMC	
	SUMP PUMP	208V/3ϕ	373W		PPA	20A/3P	3-4MM2, 1-4MM2(G)-21MMC	
EF-12	ELEC. RM.	120V/2ϕ	3.73KW		PPA	20A/1P	2-4MM2, 1-4MM2(G)-21MMC	
EF-17	ELEV. MACH. RM.	120V/1ϕ	373W		PPA	20A/1P	2-4MM2, 1-4MM2(G)-21MMC	

PANEL IPE

PANEL IPE MOUNT SURFACE LOCATION ROOM 114 MCB 80A
VOLTS 208Y/120 PHASE 3 WIRES 5* AIC 10,000 BUS

CIR. NO.	TRIP AMPS	NO. POLES	LOAD DESCRIPTION	CON.LOAD VA	CON.LOAD VA	LOAD DESCRIPTION	TRIP AMPS	NO. POLES	CIR. NO.
1	20	1	RECEPTACLES-VEHICLE CR	1200	1200	RECEPTACLES-OFFICE	20	1	2
3	20	1	RECEPTACLES-VEHICLE CR	1200	1800	RECEPTACLES-OFFICE	20	1	4
5	20	1	RECEPTACLES-VEHICLE CR	1200	1200	RECEPTACLES-COPIER	20	1	6
7	20	1	RECEPTACLES-VEHICLE CR	1200	1200	RECEPTACLES-OFFICE	20	1	8
9	20	1	RECEPTACLES-OFFICE	1800	1200	COMM EQUIP CABINET	20	1	10
11	20	1	RECEPTACLES-OFFICE	1200	1200	COMM EQUIP CABINET	20	1	12
13	20	1	RECEPTACLES-OFFICE	1200	600	RECEPTACLES-COMM. RM.	20	1	14
15	20	1	RECEPTACLES-OFFICE	1200	600	RECEPTACLES-COMM. RM.	20	1	16
17	20	1	RECEPTACLES-OFFICE	1800		SPARE	20	1	18
19	20	1	SPARE			SPARE	20	1	20
21	20	1	SPARE			SPARE	20	1	22
23	20	1	SPARE			SPARE	20	1	24

TOTAL CONNECTED LOAD(KVA) 21 DEMAND LOAD(KVA) 18.9

* PROVIDE WITH ISOLATED GROUND BUS AND 200% NEUTRAL

PANEL LPS

PANEL LPS MOUNT SURFACE LOCATION ELEC. RM MCB 50A
VOLTS 208Y/120 PHASE 3 WIRES 4 AIC 25,000 BUS 100A

CIR. NO.	TRIP AMPS	NO. POLES	LOAD DESCRIPTION	CON.LOAD VA	CON.LOAD VA	LOAD DESCRIPTION	TRIP AMPS	NO. POLES	CIR. NO.
1	20	1	EXTERIOR LTG- FRONT SERVICE LOT	600	865	EXTERIOR LTG- WALKWAY FRONT SERVICE DRIVE	20	1	2
3	20	1	EXTERIOR LTG- STORAGE PARKING	800	1530	EXTERIOR LTG-WALKWAY MAIN PARKING	20	1	4
5	20	1	EXTERIOR LTG- STORAGE PARKING	1000	930	EXTERIOR LTG- MAIN PARKING	20	1	6
7	20	1	EXTERIOR LTG- STORAGE PARKING	1200	1215	EXTERIOR LTG- BLDG. MTD. WALLPACK	20	1	8
9	20	1	EXTERIOR LTG- REAR SERVICE LOT	600	950	EXTERIOR LTG- BLDG. MTD. WALLPACK	20	1	10
11	20	1	SPARE		1215	EXTERIOR LTG- BLDG. MTD. WALLPACK	20	1	12
13	20	1	SPARE			SPARE	20	1	14
15			SPACE			SPACE	20	1	16
17			SPACE			SPACE	20	1	18

TOTAL CONNECTED LOAD(KVA) 10,905 DEMAND LOAD(KVA) 10,905

US Army Corps of Engineers
New York District

U.S. ARMY ENGINEER DISTRICT
CORPS OF ENGINEERS
NEW YORK, NEW YORK

Designed by: | Date: | Size: A1
Dwn by: | Ckd by: | Solicitation no.:
Reviewed by: | Contract no.:
Submitted by: | Plot date: 09-AUG-2005 15:15 | Plot by: e3endsvc | Scale: 100.000000:1.000000
File name: S:\fileroom\military\Fort Drum\ForceMOD\Electrical\90%SUBMITTAL\Sheetfiles\ForceMod57708_E-604XXX.dgn

PN 57708
FORCE MODERNIZATION EDUCATION /TRANSITIONAL FACILITY
FORT DRUM, NEW YORK

PANEL SCHEDULES III

Sheet reference number: E-604

SUBMITTED BY: E3ENDSVC PLOT DATE: 09-AUG-2005 15:15
S:\FILEROOM\MILITARY\FORT DRUM\FORCEMOD\ELECTRICAL\90%SUBMITTAL\SHEETFILES\FORCEMOD57708_E-604XXX.DGN

TYPE: A2, A3, A4

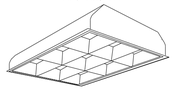

GENERAL: PARABOLIC REFLECTOR LOUVERED FLUORESCENT LUMINAIRE

HOUSING: RECESSED DIE–FORMED MINIMUM 20 GAUGE COLD–ROLLED STEEL.

FINISH: BAKED WHITE ENAMEL, MINIMUM REFLECTANCE 85% ON IRON PHOSPHATE BASE.

REFLECTOR: HIGH REFLECTANCE GLOSS WHITE

NOM DIMENSIONS: 610mm L X 1219mm W X 152.4mm D

BALLAST: 120V – ELECTRONIC BALLAST, CERTIFIED 'A' SOUND RATING, U.L. LISTED.

LAMPS: A2 – (2L) 31 WATT T8, 75CRI, RAPID START, COOL WHITE
A3 – (3L) 31 WATT T8, 75CRI, RAPID START, COOL WHITE.
A4 – (4L) 31 WATT T8, 75CRI, RAPID START, COOL WHITE.

RECESSED PARABOLIC TROFFER
N.T.S.

TYPE: B2, B3, B4

GENERAL: SPECIFICATION GRADE ACRYLIC FLUORESCENT LUMINAIRE

HOUSING: RECESSED DIE–FORMED MINIMUM 20 GAUGE COLD–ROLLED STEEL.

FINISH: BAKED WHITE ENAMEL, MINIMUM REFLECTANCE 85% ON IRON PHOSPHATE BASE.

REFLECTOR: HIGH REFLECTANCE GLOSS WHITE

NOM DIMENSIONS: A, C – 610mm L X 1219mm W X 152.4mm D

BALLAST: 120V – ELECTRONIC BALLAST, CERTIFIED 'A' SOUND RATING, U.L. LISTED.

LAMPS: B2 – (2L) 32 WATT T8, 75CRI, RAPID START, COOL WHITE
B3 – (3L) 32 WATT T8, 75CRI, RAPID START, COOL WHITE.
B4 – (4L) 32 WATT T8, 75CRI, RAPID START, COOL WHITE.

RECESSED PRISMATIC TROFFER
N.T.S.

TYPE: C2

GENERAL: INDUSTRIAL FLUORESCENT LUMINAIRE

HOUSING: DIE–FORMED STEEL CHANNEL AND END FITTING WITH WHITE ENAMEL FINISH

FINISH: WHITE ENAMEL FINISH

REFLECTOR: SYMMETRICAL DIE–FORMED ALUMINUM WITH BAKED WHITE ENAMEL FINISH

NOM DIMENSIONS: 1244mm L X 330mm W X 175mm D

BALLAST: 120V – ELECTRONIC BALLAST, CERTIFIED 'A' SOUND RATING, U.L. LISTED.

LAMPS: (2L) 32 WATT, T8, 75CRI, RAPID START, COOL WHITE

INDUSTRIAL FLUORESCENT LUMINAIRE
N.T.S.

TYPE: D1, D2

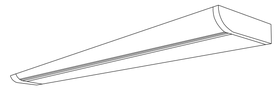

HOUSING – COLD–ROLLED, DIE–FORMED STEEL

LENS – PRISMATIC ACRYLIC LENS.

REFLECTOR – INTERNAL SILVER SPECULAR INTERVAL REFLECTORS.

FINISH – BAKED ENAMEL WHITE FINISH.

LAMP(S) – ONE (1) 32 WATT, T8 (D1)
TWO (2) 32 WATT, T8 (D2)

BALLAST – 120V ELECTRONIC.

OPTION – ON/OFF ROCKER SWITCH.

NOTE: I.E.S. TYPE DISTRIBUTION AS SPECIFIED IN LIGHTING FIXTURE SCHEDULE OR ON PLANS.

WALL MOUNTED FLUORESCENT
N.T.S.

TYPE: E

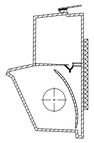

FEATURES

LAMP TYPE: 100W HPS
PROFILE: 1 LAMP
SHIELDING: GASKETED CLEAR POLYCARBONATE REFRACTOR LENS
BALLAST: HIGH POWER FACTOR TYPE (.85).

GENERAL DESCRIPTION

HOUSING: RUGGED DIE–CAST ALUMINUM

MOUNTING: FLAT/BACK WALL MOUNTED.

LENS: GASKETED, ONE–PIECE, INJECTION MOLDED, POLYCARBONATE, WITH PRISM PATTERM.

REFLECTORS: ONE–PIECE ALUMINUM

ELECTRICAL: 120 VOLTS

FINISH: DARK BRONZE POLYESTER POWDER, ELECTROSTATICALLY APPLIED.

NOM DIM: 267 mm H X 362mm W X 165mm D

LISTING: UL LISTED FOR WET LOCATION

WALL PACK LUMINAIRE
N.T.S.

TYPE: F

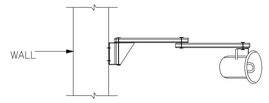

GENERAL: COMPACT FLUORESCENT DOCK LIGHT WITH INTEGAL ON–OFF SWITCH, PROVIDED WITH CORD AND PLUG

HOUSING: ZINC–PLATED STEEL HARDWARE, ALUMINUM REFLECTOR ROLLED STEEL.

FINISH: THERMOSET POWER–COATED SAFETY YELLOW FINISH

REFLECTOR: INTERNAL SPECULAR ALUMINUM REFLECTOR FOR NARROW FLOOD DISTRIBUTION

MODULAR ARMS: 41 MM SQUARE STEEL TUBE ARMS WITH 107MM IN LENGTH, JOINT ON A 107MM ARM

BALLAST: 120V – ELECTRONIC BALLAST, CERTIFIED 'A' SOUND RATING, U.L. LISTED.

LAMPS: 40 WATT COMPACT FLUORESCENT

WALL MOUNTED MODULAR ARM DOCK LIGHT
N.T.S.

TYPE: G, K, T

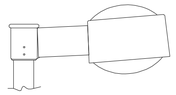

FEATURES

LAMP TYPE: 400W HPS (G&K)
250W HPS (T)

PROFILE: 1 LAMP
SHIELDING: 5 mm (3/16") CLEAR BOROSILICATE TEMPERED GLASS
REFLECTOR: FACETED SPECULAR ALUMINUM
BALLAST: HIGH POWER FACTOR, CORE & COIL, CWA
OTHER: TYPE IV DISTRIBUTION
'G' – SQUARE OPTICS
'K', 'T' – FORWARD THROW

NOM. DIMENSIONS 584 mm x 584 mm x 339 mm

GENERAL DESCRIPTION

HOUSING: ONE PIECE ABS POLYMER ON CAST ALUMINUM STRUCTURE. LENS HINGED & HELD IN PLACE BY CAPTIVE SCREWS.

MOUNTING: SQ. CAST MOUNTING ARM AND ROUND POLE WITH ANCHOR TYPE BASE, ANCHOR BOLTS & MOUNTING HARDWARE.

ELECTRICAL: 120 VOLT BALLAST.

FINISH: FIXTURE MOUNTING ARM, HOUSING, DOOR FRAMES, POLE & BASE TO BE PAINTED DARK BRONZE FINISH.

POLE MOUNTED HPS CUTOFF LUMINAIRE
N.T.S.

TYPE: H1, H2

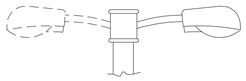

GENERAL: ENCLOSED, HEAVY–DUTY, INTEGRALLY BALLASTED HPS POLE–MOUNTED LIGHTING FIXTURE

HOUSING: DIE–CAST ALUMINUM

FINISH: BAKED ENAMEL

REFLECTOR: ANODIZED ALUMINUM REFLECTOR WITH TEMPORED PRISMATIC GLASS

BALLAST: MINUS 28.8 DEGREE C, REGULATED TYPE BALLAST.

LAMPS: H1 – (1) – 150 W HPS
H2 – (2) – 150 W HPS

POLE MOUNTED HPS LUMINAIRE
N.T.S.

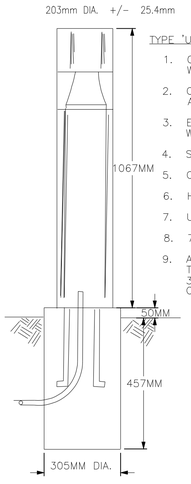

TYPE 'U' LUMINAIRE REQUIREMENTS

1. COLUMN, EXTRUDED ALUMINUM (MINIMUM 3.76mm THICK WALL) WITH MEDIUM BRONZE ANODIZED FINISH.
2. COMPLETELY GASKETED WEATHERPROOF TOP LAMP ACCESSORY PLATE.
3. EXTRUDED CLEAR ACRYLIC MINIMUM 4.76mm THICK WALL ENCLOSURE.
4. SEGMENTED SPECULAR CLEAR ALZAK REFLECTOR.
5. CLEAR ALZAK REFLECTING CONE.
6. HIGH POWER FACTOR BALLAST.
7. U.L. LISTED FOR WET LOCATIONS.
8. 70 WATT HIGH PRESSURE SODIUM LAMP.
9. ANCHOR BOLT KIT PER MANUFACTURER, BUT NOT LESS THAN TWO 12.7mm X 228.6mm LONG ANCHOR BOLTS WITH 38.1mm "L" BEND SET IN 305mm DIA X 610mm DEEP CONCRETE BASE. TOP OF BASE 50.8" ABOVE GRADE.

EXTERIOR BOLLARD LUMINAIRE
N.T.S.

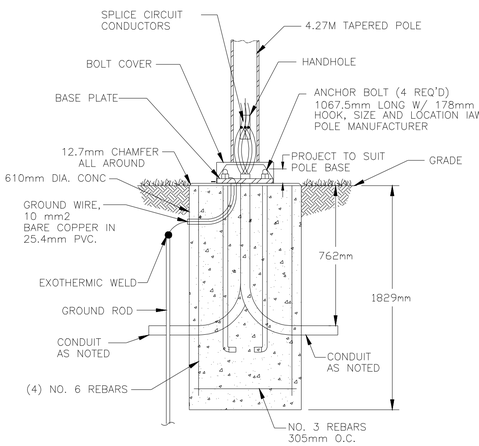

PEDESTRIAN POLE MOUNTING DETAIL
N.T.S.

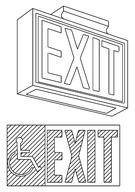

TYPE 'X' LED LUMINAIRE REQUIREMENTS

1. LETTERS SHALL BE 152.4mm TALL WITH 19mm STROKES FORMED BY A STENCIL FACE.
2. PROVIDE GREEN FIBERGLASS PANEL BEHIND STENCIL FACE.
3. PROVIDE 90–MINUTE DC POWER BACK–UP.
4. PROVIDE ILLUMINATED ARROWS AS INDICATED ON THE DRAWINGS.
5. PROVIDE SINGLE OR DOUBLE FACE AS INDICATED ON DRAWINGS.
6. PROVIDE CEILING, END WALL, BACK WALL OR PENDANT MOUNTING AS INDICATED ON DRAWINGS.
7. UNITS MOUNTED EXPOSED TO THE ENVIRONMENT SHALL HAVE A DAMP OR WET U.L. LABEL AS APPROPRIATE AND SHALL NOT BE CONSTRUCTED OF STEEL.
8. PROVIDE INTERNAL PROVISIONS FOR GROUNDING.
9. PROVIDE INTERNATIONAL SYMBOL OF ACCESS ON SIGN, ACCORDINGLY.

ILLUMINATED EXIT SIGN
N.T.S.

TYPE: 'L'

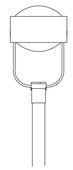

FEATURES

LAMP TYPE: 150W HPS
PROFILE: 1 LAMP
SHIELDING: CLEAR TEMPERED GLASS
BALLAST: HIGH POWER FACTOR, CORE & COIL, CWA
NOM. DIMENSIONS: 20" DIA. X 20" H

GENERAL DESCRIPTION

HOUSING: ONE PIECE HEAVY GAUGE SPUN ALUMINUM WITH NO VISIBLE SEAMS OR WELD BEADS WITH SOLID TOP

MOUNTING: YOKE/POLE MOUNTED, 4.57 M (TOP OF LUMINAIRE) MAX

REFLECTORS: SEGMENTED HIGHLY REFLECTIVE SPECULAR ALUMINUM

ELECTRICAL: 120 VOLT BALLAST

FINISH: PAINTED BRONZE FINISH

LOW HEIGHT PEDESTRIAN POLE
N.T.S.

US Army Corps of Engineers
New York District

Mark	Description	Date	Appr.

U.S. ARMY ENGINEER DISTRICT
CORPS OF ENGINEERS
NEW YORK, NEW YORK

Designed by: | Date: | Size: A1
Dwn by: | Ckd by: | Solicitation no.:
Reviewed by: | Contract no.:
Submitted by: | Plot date: 09-AUG-2005 15:15 | Plot by: eldridge | Scale: 1:00000/00000
File name: S:\Resources\Military\Fort Drum\Forcemod\Electrical\90%\Submittal\Sheetfiles\Forcemod57708_e605.dgn

FORCE MODERNIZATION ESTIMATES (TRANSITIONAL FACILITY)
FORT DRUM, NEW YORK

FN 57708

LIGHTING FIXTURE DETAILS

Sheet reference number:
E–605

SUBMITTED BY: E3NDSVC PLOT DATE: 09-AUG-2005 15:15
S:\FILEROOM\MILITARY\FORT DRUM\FORCEMOD\ELECTRICAL\90%\SUBMITTAL\SHEETFILES\FORCEMOD57708_E 605XXX.DGN

TYPE: M

GENERAL: PENDANT MOUNTED FLUORESCENT LUMINAIRE (BOTTOM OF FIXTURE AT 305MM BELOW CEILING)

HOUSING: DIE-FORMED CODE GAUGE PRIME COLD ROLLED STEEL.

FINISH: BAKED MATTE WHITE POLYESTER POWDER ENAMEL FINISH

REFLECTOR: PERF ARCH OPTICAL ASSEMBLY – A PERFORATED STEEL DOWNLIGHT LAMP SHIELD WITH ACRYLIC OVERLAY LENS.

BALLAST: T8 ELECTRONIC PROGRAM RAPID START, CLASS 'P'

LAMPS: N3: (3L) 32 WATT T8

SURFACE MOUNTED STRIP LIGHT

N.T.S.

TYPE: N3, N4

GENERAL: SURFACE MOUNTED FLUORESCENT LUMINAIRE

HOUSING: DIE-FORMED CODE GAUGE PRIME COLD ROLLED STEEL.

FINISH: ELECTROSTATICALLY APPLIED, BAKE WHITE POLYESTER POWDER ENAMEL FINISH

REFLECTOR: PRISMATIC ACRYLIC LENS

BALLAST: T8 ELECTRONIC RAPID START

LAMPS: N3: (3L) 32 WATT T8
N4: (4L) 32 WATT T8

SURFACE MOUNTED FLUORESCENT LUMINAIRE

N.T.S.

TYPE: P4

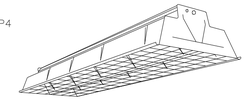

GENERAL: PENDANT MOUNTED INDUSTRIAL FLUORESCENT LUMINAIRE WITH DEEP CENTER "V" GROOVE.

HOUSING: DIE-FORMED MINIMUM 20 GAUGE COLD ROLLED STEEL.

FINISH: ELECTROSTATICALLY APPLIED, WHITE POLYESTER POWDER ENAMEL FINISH OVER IRON PHOSPHATE PRETREATMENT ON ALL PARTS EXCEPT PORCELAINIZED REFLECTOR.

REFLECTOR: PARABOLIC SHAPED, DEEP DIE EMBOSSED WITH INTEGRAL ALIGNERS AND CHANNEL CONNECTOR SECURED BY QUARTER TURN LATCHES. FINISHED WITH BAKED ON WHITE PORCELAINIZED ENAMEL.

BALLAST: A SOUND RATED, LOW TEMPERATURE BALLAST.

LAMPS: (4)54 WATT, T5-HO, RAPID START, COOL WHITE FLUORESCENT. HIGH POWER FACTOR, RAPID START, CLASS P, CBM CERTIFIED,

GUARD: WIRE MESH GUARD.

INDUSTRIAL FLUORESCENT LUMINAIRE

N.T.S.

TYPE: Q

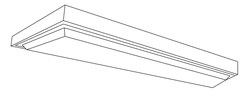

GENERAL: SURFACE CEILING MOUNTED FLUORESCENT FIXTURE, 1-FOOT BY 4 FEET WITH DROP OPAL LENS

HOUSING: DIE-FORMED MINIMUM 20 GAUGE COLD ROLLED STEEL.

FINISH: BAKED WHITE ENAMEL ON PRIME COATING

REFLECTOR: DROP APAL LENS

BALLAST: T8 ELECTRONIC BALLAST

LAMPS: (2L) 32 WATT, T8.

SURFACE MOUNTED FLUORESCENT LUMINAIRE

N.T.S.

TYPE: 'R'

FEATURES

LAMP TYPE: CFQ26W
PROFILE: 2 LAMP – 26W
BALLAST: ELECTRONIC

GENERAL DESCRIPTION

HOUSING: DIE CAST ALUMINUM WITH CEILING-MOUNTED BRACKETS

REFLECTORS: ONE-PIECE ALZAK SEMI-SPECULAR, LOW IRIDESCENT W/ BLSCK CROSS BAFFLE

ELECTRICAL: 120 VOLT BALLAST

EFFICIENCY: 70%

NOM. DIMENSIONS: 8" DIA. X 9" D.

8" DIA. SURFACE-MOUNTED FLUORESCENT DOWNLIGHT

N.T.S.

TYPE: 'S'

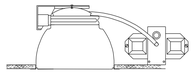

FEATURES

LAMP TYPE: CFQ26W
PROFILE: 2 LAMP – 26W
BALLAST: ELECTRONIC

GENERAL DESCRIPTION

HOUSING: DIE CAST ALUMINUM WITH UNIVERSAL MOUNTING BRACKETS

REFLECTORS: ONE-PIECE ALZAK SEMI-SPECULAR, LOW IRIDESCENT W/ BLSCK CROSS BAFFLE

ELECTRICAL: 120 VOLT BALLAST

EFFICIENCY: 70%

NOM. DIMENSIONS: 8" DIA. X 9" D.

8" DIA. CROSS BAFFLE FLUORESCENT DOWNLIGHT

N.T.S.

TYPE: 'V'

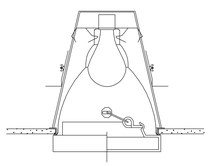

FEATURES

LAMP TYPE: 60W A19
PROFILE: 1 LAMP
SHIELDING: OPAL POLYCARBONATE DROP DIFFUSER
BALLAST: NONE

GENERAL DESCRIPTION

HOUSING: DIE-FORMED 20 GA. GALVANIZED STEEL MOUNTING PAN; UNIVERSAL MOUNTING BRACKETS, CONTINUOUS NEOPRENE GASKET ON FLANGE OF REFLECTOR

REFLECTORS: SEMI-SPECULAR HYDRO-FORMED 1 mm (0.04") THICK ALUMINUM; WHITE TRIM RING

ELECTRICAL: 120 VOLT

LOCATION: WET/SHOWER STALL

6" DIA. RECESSED INCANDESCENT DROPPED OPAL SHOWERLIGHT

TYPE: 'W'

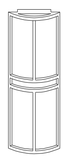

FEATURES

LAMP TYPE: QF13/RS
PROFILE: 2 LAMP
SHIELDING: WHITE ACRYLIC
BALLAST: HIGH POWER FACTOR, ELECTRONIC -20 DEGREES C STARTING TEMP. PROVIDE EMER INVERTER BALLASTS WHERE INDICATED.

NOM. DIMENSIONS: 9"W X 6"D X 20"H

GENERAL DESCRIPTION

HOUSING: SOLID ALUMINUM BAR STOCK

ELECTRICAL: 120 VOLT BALLAST

FINISH: PAINTED – DARK BROWN

LOCATION: OUTDOOR/WET

WALL MOUNTED OUTDOOR LUMINAIRE

N.T.S.

LIGHTING FIXTURE SCHEDULE

TYPE	LOCATION	F-FLUOR. I-INCAN. HPS-HIGH PRESSURE SODIUM LED-LIGHT EMIT DIODE MH- METAL HALIDE	NO. OF LAMPS	WATTAGE	VOLTAGE	MOUNTING HEIGHT C-CEILING (U.O.N.)	MOUNT-STYLE R-RECESS P-PENDANT S-SURFACE W-WALL		REMARKS
A2	OFFICES/CLASSRMS/LIB	F	2	32	120	C	R		SEE NOTE 2, 3, 6
A3	OFFICES/CLASSRMS/LIB	F	3	32	120	C	R		SEE NOTE 2
A4	OFFICES/CLASSRMS/LIB	F	4	32	120	C	R		SEE NOTE 2
B2	CORRIDORS/LOBBY	F	2	32	120	C	R		SEE NOTE 2
B3	CORRIDORS/LOBBY	F	3	32	120	C	R		SEE NOTE 2
B4	CORRIDORS/LOBBY	F	4	32	120	C	R		SEE NOTE 2 & 4
C2	MECH/ELEC ROOMS	F	2	32	120	3000mm	P		SEE NOTE 2
D1	TOILETS	F	1	32	120	2300mm	W		SEE NOTE 2
D2	CORRIDOR	F	2	32	120	2300mm	W		
E	EXTERIOR WALL	HPS	1	100	120	AS INDICATED	W		
F	WAREHOUSE DOCK LIGHT	CF	1	40	120	1200 mm	W		
G	PARKING AREAS	HPS	1	400	120	9150 mm	POLE		HOLOPHANE RTA3080GP2NDBZ (POLE)/ PT4400HPMTSLRZ W/ LAMP OR EQUAL
H1	STORAGE PARKING AREAS	HPS	1	150	120	9150 mm	POLE		HOLOPHANE RTA3080GP2NDBZ (POLE)/ 31515SCAMT7RXDG4BBZULLCMG OR EQUAL
H2	STORAGE PARKING AREAS	HPS	2	150	120	9150 mm	POLE		HOLOPHANE RTA3080GP2NDBZ (POLE)/ 31515SCAMT7RXDG4BBZULLCMG OR EQUAL
K	FRONT SERVICE DRIVE	HPS	1	400	120	9150 mm	POLE		HOLOPHANE RTA3080GP2NDBZ (POLE)/ PT4400HPMTFLRZ W/ LAMP OR EQUAL
L	WALKWAY	HPS	1	150	120	4575 mm	POLE		HOLOPHANE RTA1550GP2NDBZ (POLE)/ PT4150HP OR EQUAL
M	CLASSROOMS	F	2	32	120	2300mm	P		NOTE 2, 3, 6
N3	ARMS VAULT	F	3	32	120	C	S		SEE NOTE 2
N4	COMM RM (2RD FL)	F	4	32	120	C	S		SEE NOTE 2
P4	VEHICLE PROCESS WAREHOUSE	F	4	54	120	6100 mm	P		T5-HO LAMPS, NOTE 4
Q	STAIR	F	2	32	120	C	S		SEE NOTE 2
R	CLASSROOMS	CF26	2	26	120	C	S		NOTE 3, 6
S	JANITOR'S CLOSET, CLASSROOMS	CF26	2	26	120	C	R		
T	FRONT & REAR SERVICE LOT	HPS	1	250	120	9150 mm	POLE		HOLOPHANE RTA3080GP2NDBZ (POLE)/ PT4250HPMTFLRZ W/ LAMP OR EQUAL
U	FRONT WALKWAY	HPS	1	70	120	915 mm	POLE		HOLOPHANE KBD870MLV OR EQUAL
V	SHOWER	I	1	60	120	C	R		
W	ENTRANCE	CFQ13	2	13	120		W		-
	EXIT SIGN	LED	1	6	120		C, W		ARROW ON FACE WHERE INDICATED BY DARKEN AREA (SEE DETAIL BELOW)
	FLUORESCENT WITH EMERGENCY BATTERY	F			120				EMERGENCY BATTERY BACK-UP UNIT (FIXTURE AS INDICATED)
Y	ARMS VAULT DOOR	F	1		120	3150 MM	W,S		254MM ROUND DECORATIVE OPAL FROSTED POLYCARBONATE DIFFUSERS WITH BLACK BASE

NOTES:

1. NOT USED.
2. THESE FIXTURES SHALL USE 32 WATT T8, 3500 K, ENERGY SAVING LAMPS & ELECTRONIC, LOW HARMONIC DISTORTION (<20% THD), RAPID START BALLAST, SEE SPECIFICATIONS.
3. FIXTURES ON DIMMERS SHALL HAVE DIMMING BALLAST. SEE LIGHTING PLANS.
4. PROVIDE SEPARATE BALLAST(S) FOR MULTIPLE SWITCHED FIXTURES.
5. PROVIDE EDGE TRIMMING AND FLANGE FOR FIXTURES INSTALLED IN SHEETROCK CEILINGS, AND SHEET METAL CEILINGS.
6. WHERE DIMMING IS REQUIRED, ENSURE DIMMING BALLASTS IS COMPATIBLE WITH DIMMING CONTROLLER.
7. THE CONTRACTOR SHALL SELECT FLUORESCENT LIGHTING FIXTURE DIMENSION (METRIC OR ENGLISH) THAT ARE COMPATIBLE WITH ARCHITECTURAL ACOUSTICAL CEILING PLAN. (I.E. 600mm x 1200mm).
8. CONTRACTOR SHALL PROVIDE ALL LIGHTING FIXTURES WITH POLES, MOUNTING BRACKETS, BALLASTS AND LAMBS.

US Army Corps of Engineers
New York District

Mark	Description	Date	Appr.

U.S. ARMY ENGINEER DISTRICT
CORPS OF ENGINEERS
NEW YORK, NEW YORK

Designed by: | Date: | Size: A0
Dwn by: | Ckd by: | Solicitation no.:
Reviewed by: | Contract no.:
Submitted by: | Rel date: 09-AUG-2005 18:16 | Plot scale: 1 | Plot date: 1/0000/0000

FILE name: S:\Sources\Military\Fort Drum\FORCEMOD\ELECTRICAL\90%SUBMITTAL\Sheetfiles\FORCEMOD57708_E-606GXXX.DGN

FORCE MODERNIZATION TRAINING FACILITY
PN 57708
FORT DRUM, NEW YORK

LIGHTING FIXTURE SCHEDULE & DETAILS

Sheet reference number:
E-606

SUBMITTED BY: E3ENDSVC
S:\FILEROOM\MILITARY\FORT DRUM\FORCEMOD\ELECTRICAL\90%SUBMITTAL\SHEETFILES\FORCEMOD57708_E-606GXXX.DGN
PLOT DATE: 09-AUG-2005 15:15

U.S. ARMY

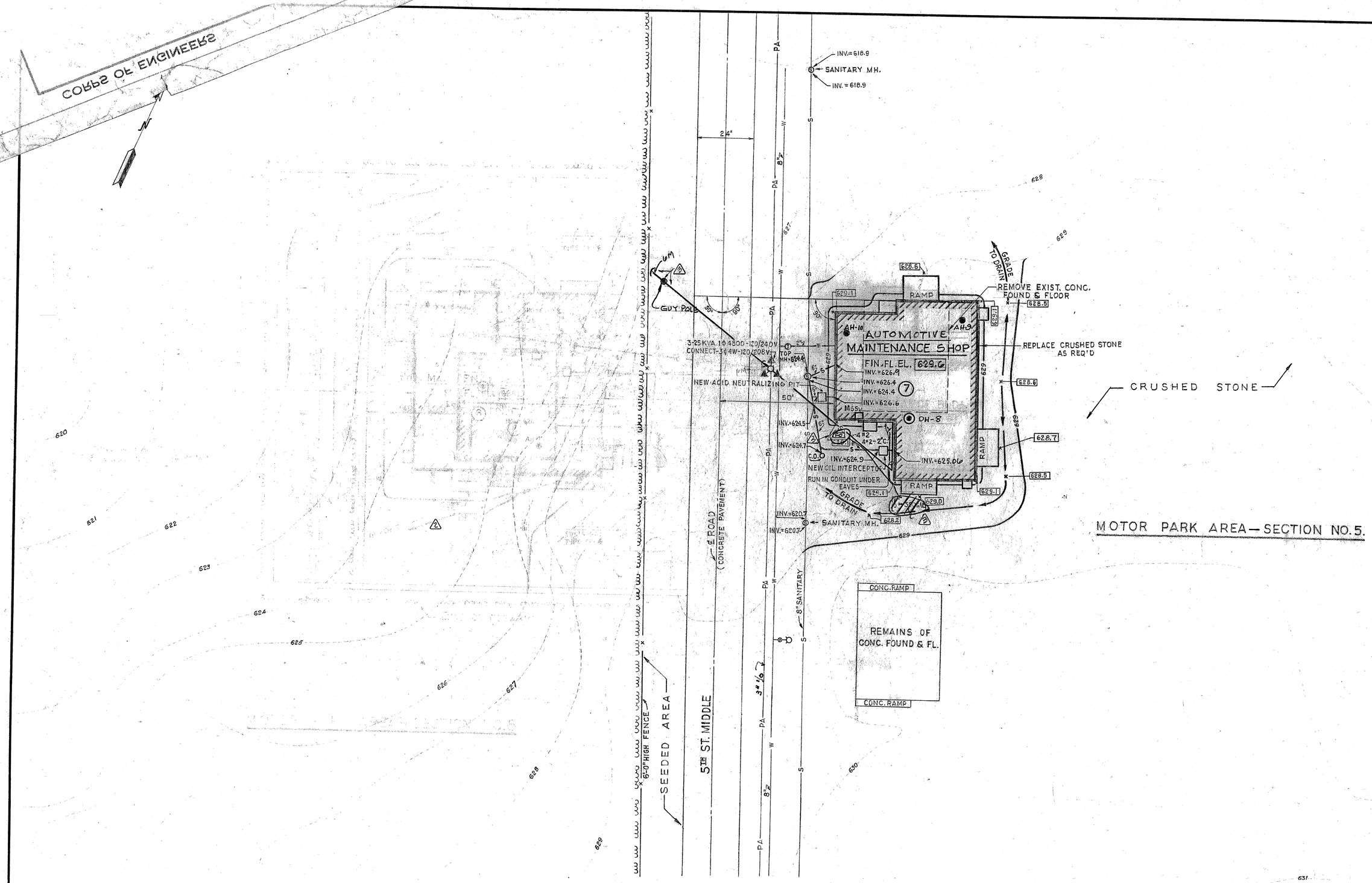

SITE PLAN

SCALE: 1"=20'-0"

20' 0 20' 40'

NOTES:

1.....FOR LEGEND, SEE SHEET NO.3

△2 2.... DELETED

△3 3.... NEW CRUSHED STONE SHALL CONFORM ESSENTIALLY TO STATE OF N.Y. DEPT OF PUBLIC WORKS SPECIFICATIONS PART I, SECT. G, PARAGRAPH M4, SIZE 3.

RECORD DRAWING OF WORK AS BUILT

FILMED (35MM)

New York District

40

REVISION	DATE	DESCRIPTION	BY
△3	2 SEP 1969	△3	
△2	2 DEC. 68	AUTOMOTIVE MAINTENANCE SHOP (6) DELETED △2	S.F.
△1	18 SEP 68	NOTE ADDED.	HAT

DEPARTMENT OF THE ARMY
NEW YORK DISTRICT, CORPS OF ENGINEERS
NEW YORK, NEW YORK 10003

DRAWN BY: L.M.
CHECKED BY: D.A.
DESIGNED BY: H. Tilton, J. Gallin, L. Bloom
REVIEWED: D. Abdelsatar, L. Ka
SECTION CHIEF

CAMP DRUM
ARMY NATIONAL GUARD
STORAGE, MAINTENANCE & MISC. FACILITIES
AUTOMOTIVE MAINTENANCE SHOP (7)
SITE PLAN
WATERTOWN NEW YORK

(18)

SUBMITTED: M. N. Fiddler, CHIEF, DESIGN BRANCH
RECOMMENDED: Frank L. Ponzio, CHIEF, ENGINEERING DIVISION
APPROVED: COLONEL, C. E., DISTRICT ENGINEER
DATE 15 AUG. 1968

SCALE AS SHOWN
DRAWING NUMBER
SHEET 7 OF

FILE NO. 7549-607

7-1-81

(7)

18-1-7

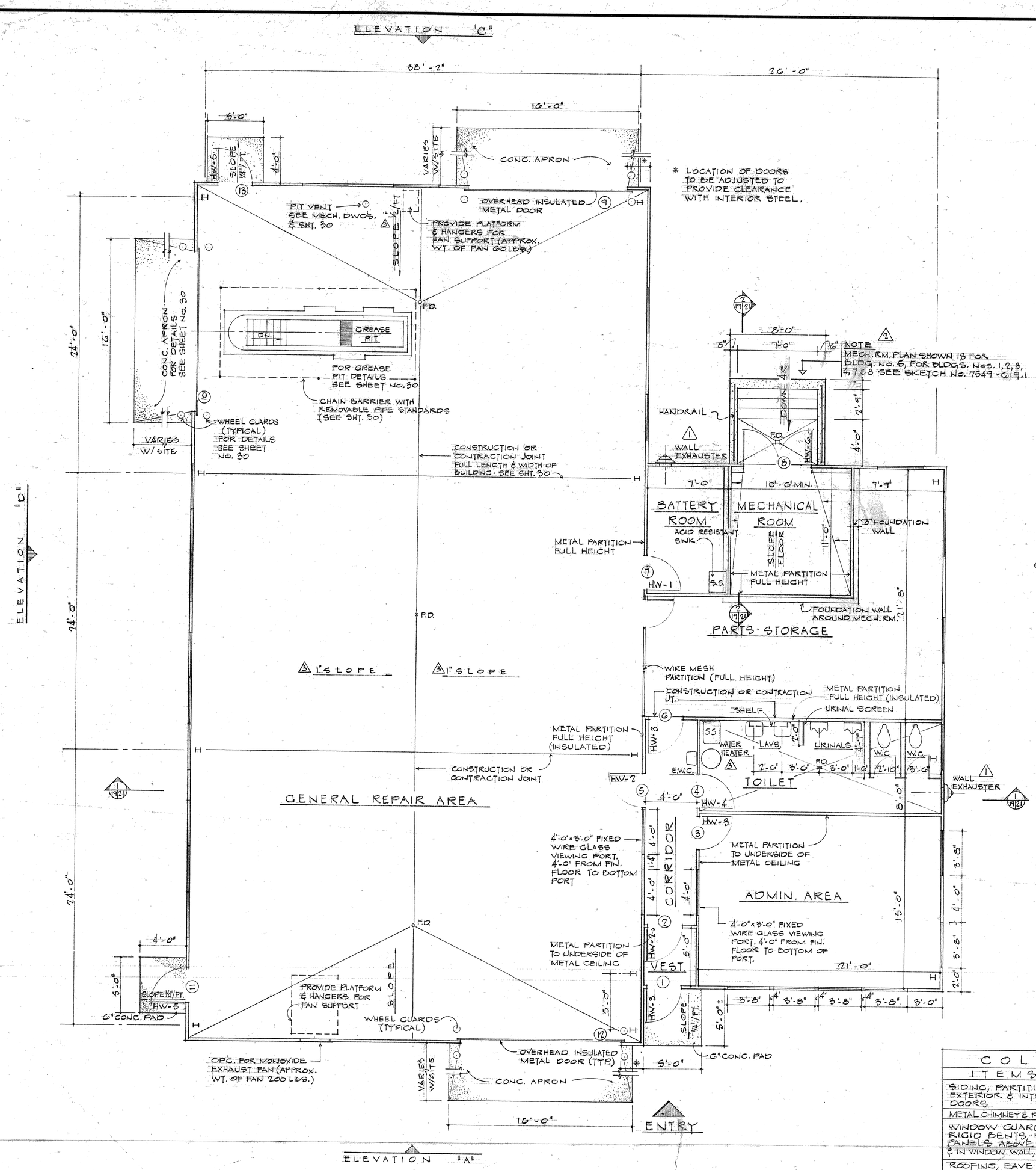

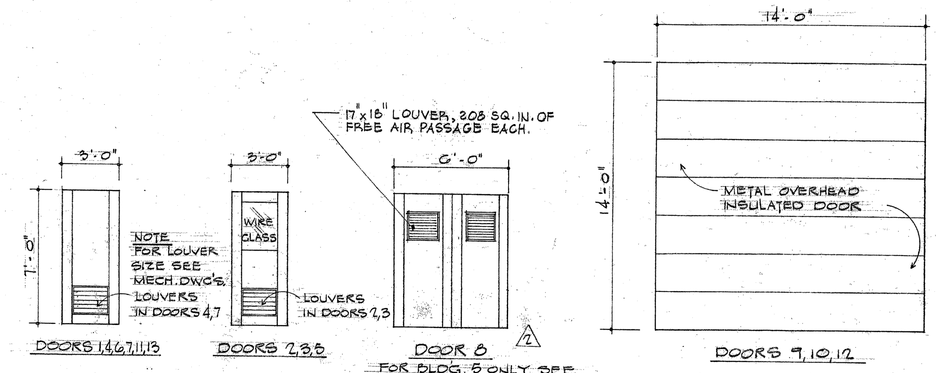

DOOR TYPES.
SCALE: 1/4" = 1'-0"

NOTE:
2 ALL DOORS ARE 18 GAGE METAL DOORS WITH HONEYCOMB CORE EXCEPT OVERHEAD DOORS

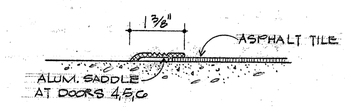

SADDLE DETAIL.
SCALE: HALF FULL SIZE

FINISH SCHEDULE				
AREA	FLOOR	CEILING	WALLS	REMARKS
GENERAL REPAIR AREA	CONC.	EXP.	METAL	
VESTIBULE	A.T.	METAL	METAL	
CORRIDOR	A.T.	METAL	METAL	
ADMIN. AREA	A.T.	METAL	METAL	
TOILET	CONC.	METAL	METAL	
PARTS STORAGE	CONC.	EXP.	METAL	
BATTERY ROOM	CONC. *	EXP. *	METAL *	ACID RESISTANT PAINT APPLIED TO ALL SURFACES (SEE PAINTING SPECS.)
MECHANICAL ROOM	CONC.	EXP.	METAL	

ASPHALT TILE IN VESTIBULUE, CORRIDOR & ADMINISTRATION AREAS, SHALL BE STRAIGHT PATTERN. COLOR TO BE SIMILAR TO ARMSTRONGS 5C901 (PEARL BLUSH)

NOTES:

1. PROVIDE ONE WINDOW GUARD FOR EACH INDIVIDUAL WINDOW IN THE PARTS STORAGE ROOM.
2. INSECT SCREENS SHALL BE PROVIDED FOR WINDOWS IN TOILET & ADMINISTRATION AREA.
3. PROVIDE WEATHERSTRIPPING & SADDLES ON ALL EXTERIOR DOORS (EXCEPT IN MECHANICAL ROOM)
4. "U" FACTORS:
   WALLS: 0.27
   ROOF: 0.10
5. ALL GLASS TO BE WIRE GLASS.
6. ALL PARTITIONS TO BE METAL (HEIGHTS AS SHOWN). PARTITIONS SHALL BE METAL FACED BOTH SIDES WITH SURFACED CONFIGURATED TO MATCH THAT OF EXTERIOR WALL LINER OR WAINSCOT, PARTITIONS TO BE A MINIMUM OF 26 GA. MAX. 4" THICK OF THE INTERLOCKING TYPE. USE OF EXPOSED GIRTS IS PROHIBITED.
7. VENETIAN BLINDS WILL BE PROVIDED ON ALL WINDOWS IN THE ADMINISTRATION AREA.
8. FLOOR SLAB TO BE CLASS "P" CONCRETE. FOOTINGS, PIERS, & GRADE BEAMS TO BE CLASS "B" CONCRETE (2500 PSI.)
9. SEE SITE PLAN FOR NUMBER OF STEPS REQUIRED AT BUILDING ENTRIES.

RECORD DRAWING OF WORKAS-BUILT

COLOR SCHEDULE		
ITEMS	COLOR	REMARKS
SIDING, PARTITIONS, EXTERIOR & INTERIOR DOORS	MIST GREEN	SIMILAR TO COLOR BY PARKERSBURG METAL BUILDINGS
METAL CHIMNEY & ROOF EXH.	*	*COLOR OF BOTH ITEMS TO MATCH
WINDOW GUARDS, RIGID BENTS, METAL PANELS ABOVE DOORS, & IN WINDOW WALL, WAINSCOT	DESERT TAN	DO.
ROOFING, EAVE & GABLE TRIM, CEILINGS, WINDOW & WINDOW WALL FRAMING MEMBERS	WHITE	DO.
WHEEL GUARDS, REMOVABLE PIPE STANDARDS	BLACK	SIMILAR TO FED. STANDARD 595 (17038) BLACK
TOILET & URINAL PARTITIONS	CHESTNUT BROWN	SIMILAR TO COLOR BY FIAT PRODUCTS DEPT.

30

REVISION	DATE	DESCRIPTION	BY
3	2 SEP	ADDED NOTE, SLOPE DIMENSIONS REVERSED LOCATION OF ROOF VENT & HEATER, RELOCATED DOOR IN MECH. RM (SEE SKETCH)	
2	7 FEB. 69	LOUVERS ADDED TO DOORS No 8, ADDED NOTE 3	HDB
1	15 OCT 68	WALL EXHAUSTER ADDED IN TOILET & RELOCATED IN BATTERY RM.	C.M.P.

DEPARTMENT OF THE ARMY
NEW YORK DISTRICT, CORPS OF ENGINEERS
NEW YORK, NEW YORK

DRAWN BY: Charles Pelagonia
CHECKED BY: S. D. Koell
DESIGNED BY: Charles Pelagonia
REVIEWED: R. A. Vernacotola, SECTION CHIEF

CAMP DRUM
ARMY NATIONAL GUARD
STORAGE, MAINTENANCE & MISC. FACILITIES
AUTOMOTIVE MAINTENANCE SHOP
FLOOR PLAN
WATERTOWN NEW YORK

SUBMITTED: M. N. Fiekow, CHIEF, DESIGN BRANCH
RECOMMENDED: Frank L. Pensio, CHIEF, ENGINEERING DIVISION
APPROVED: COLONEL C. E., DISTRICT ENGINEER
DATE 15 AUG. 1968
SCALE AS SHOWN
DRAWING NUMBER
SHEET 19 OF 23

188

FILE NO. 7549-619

19

18-1-18

18-1-18

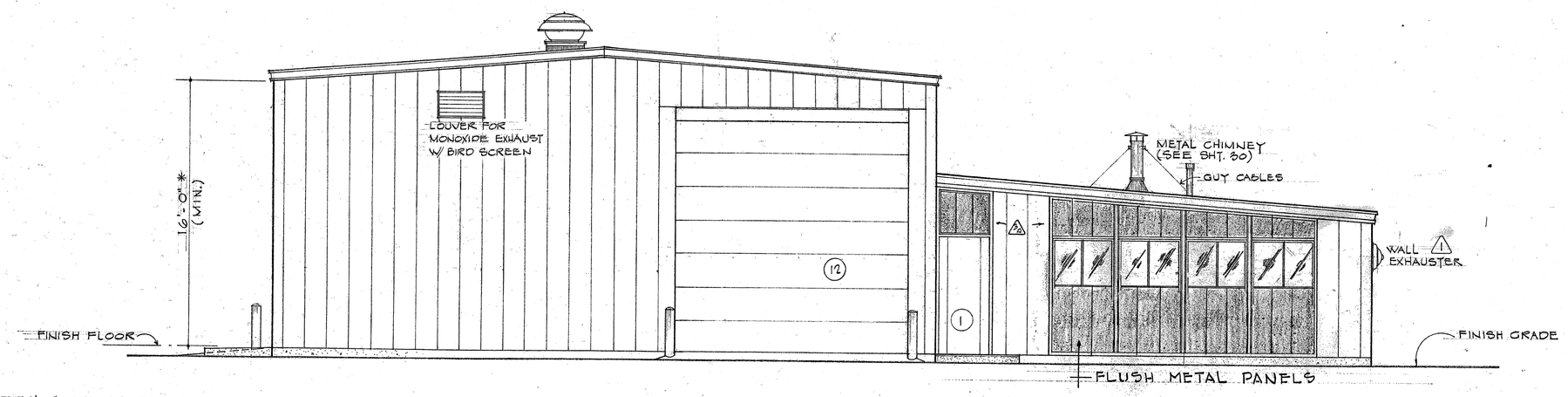

* 16'-0" MINIMUM HEIGHT, OR HEIGHT TO SUIT CLEARANCE OF 14'-0" OVERHEAD DOORS.

ELEVATION "A"
SCALE: 1/4" — 1'-0"

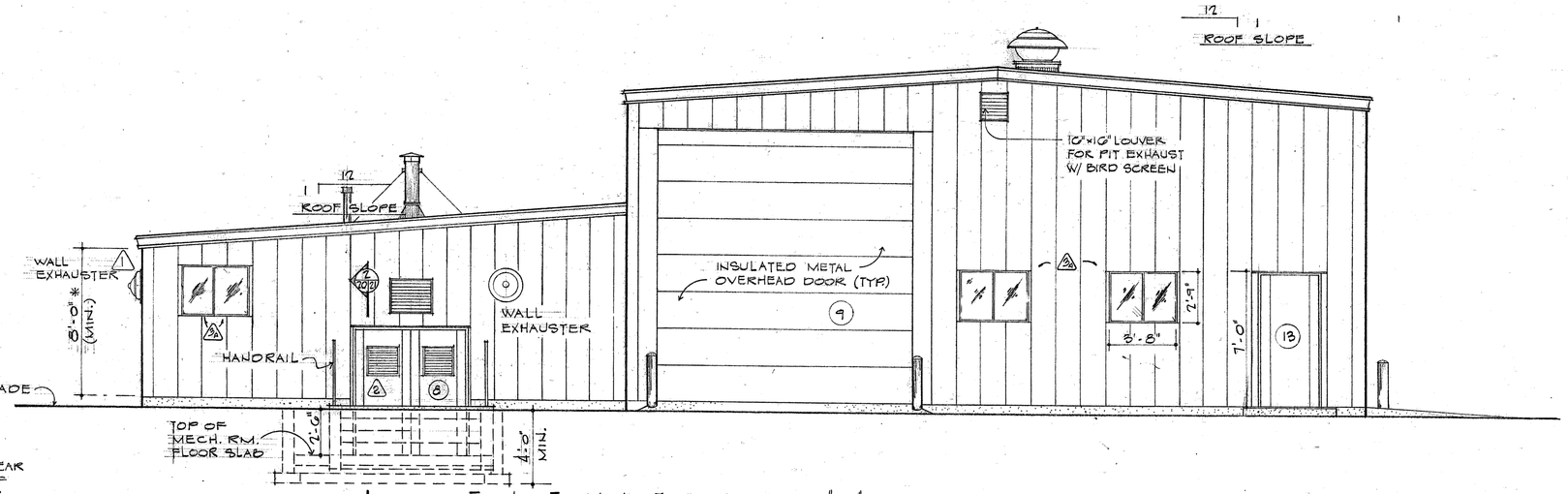

* 8'-0" MINIMUM CLEAR TO UNDERSIDE OF STEEL FRAME OR HEIGHT TO SUIT CLEARANCE FOR PROPER INSTALLATION OF MECHANICAL EQUIPMENT.

ELEVATION "C"
SCALE: 1/4" — 1'-0"

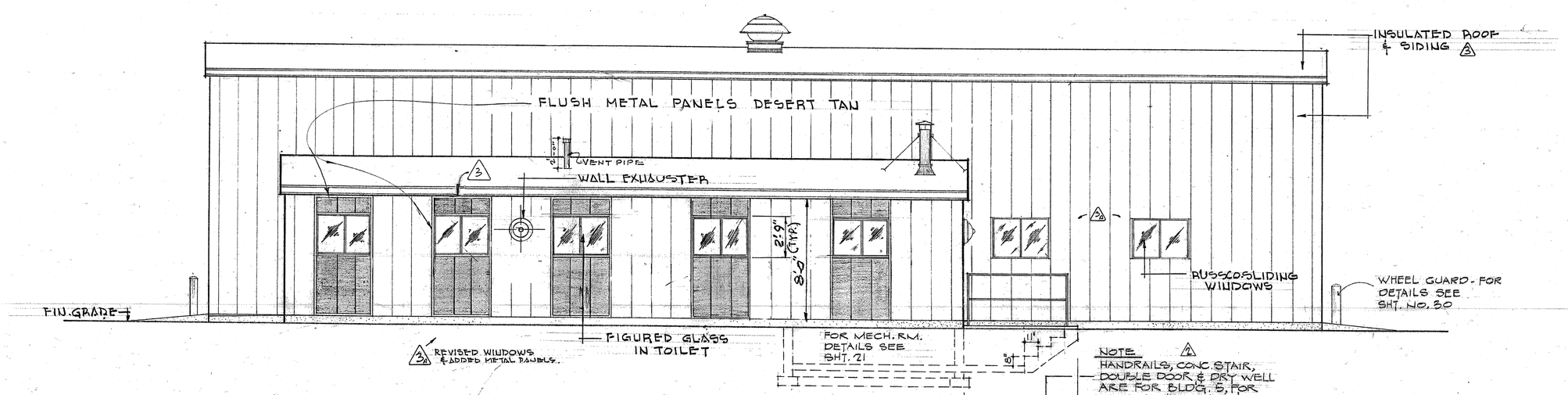

NOTE
HANDRAILS, CONC. STAIR, DOUBLE DOOR & DRY WELL ARE FOR BLDG. 5, FOR CONDITION AT BLDGS. 1,2,3,4,7,&8 SEE SKETCH No 7549-619.1

ELEVATION "B"
SCALE: 1/4" — 1'-0"

RECORD DRAWING OF WORK-AS-BUILT

FILMED (35MM)
New York District

29

REVISION	DATE	DESCRIPTION	BY
3	2 SEP 1969		
2	7 FEB 69	LOUVERS ADDED TO DOOR NO. 8, ADDED NOTE 2	HDB
1	15 OCT. 68	ADDED WALL EXHAUSTER	C.M.P.

DEPARTMENT OF THE ARMY
NEW YORK DISTRICT, CORPS OF ENGINEERS
NEW YORK, NEW YORK

DRAWN BY: Charles Palagonia
CHECKED BY: Joseph J. Murno
DESIGNED BY: Charles Palagonia
REVIEWED: L. A. Vernarelli, SECTION CHIEF

CAMP DRUM
ARMY NATIONAL GUARD
STORAGE, MAINTENANCE & MISC. FACILITIES
AUTOMOTIVE MAINTENANCE SHOP
ELEVATIONS
WATERTOWN NEW YORK (18)

SUBMITTED: M. N. Fialkow, CHIEF, DESIGN BRANCH
RECOMMENDED: Frank L. Panuzio, CHIEF, ENGINEERING DIVISION
APPROVED: COLONEL C. E., DISTRICT ENGINEER
DATE 15 AUG. 1968
SCALE AS SHOWN
DRAWING NUMBER
SHEET 20 OF

18-1-20

FILE NO. 7549-620 (20)

18-1-20

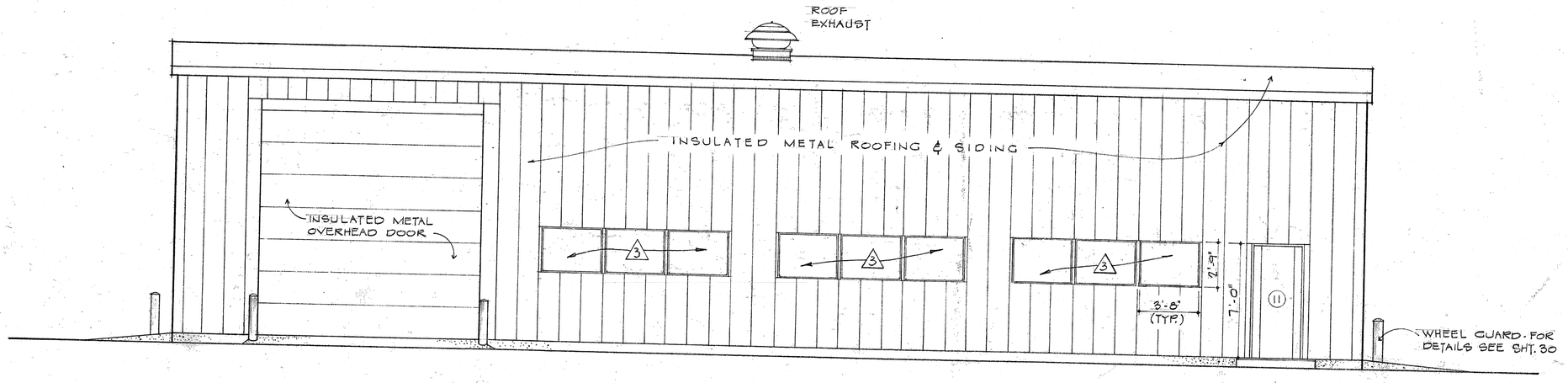

ELEVATION 'D'.
SCALE 1/4" 1'-0"

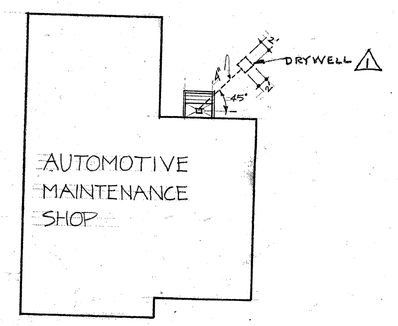

KEY PLAN

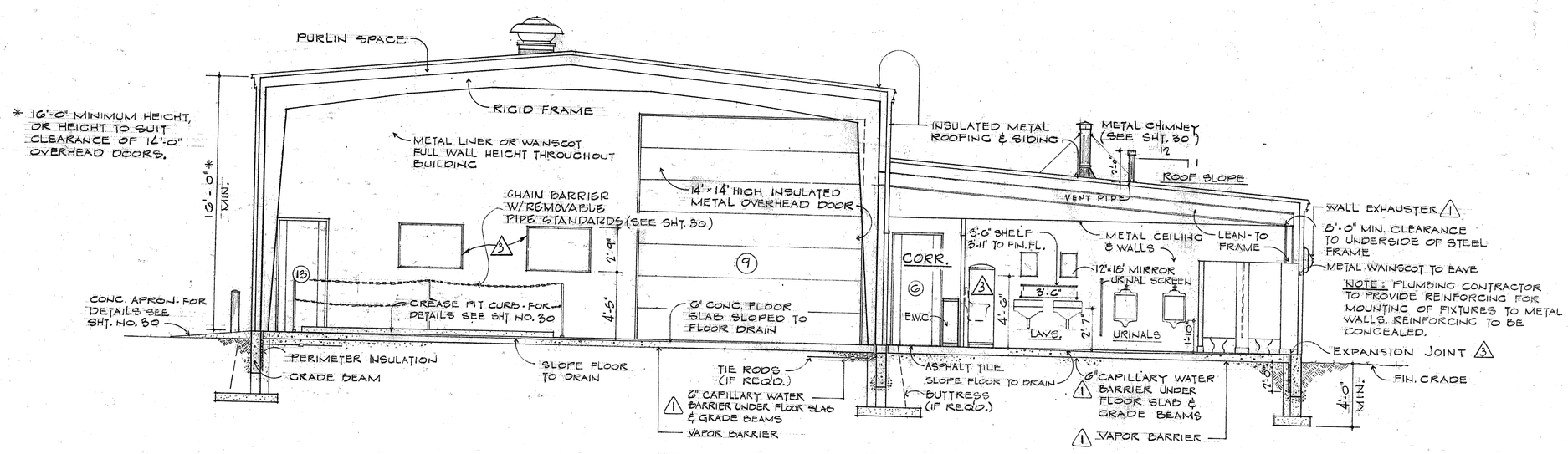

SECTION 1/19/21
SCALE 1/4" 1'-0"

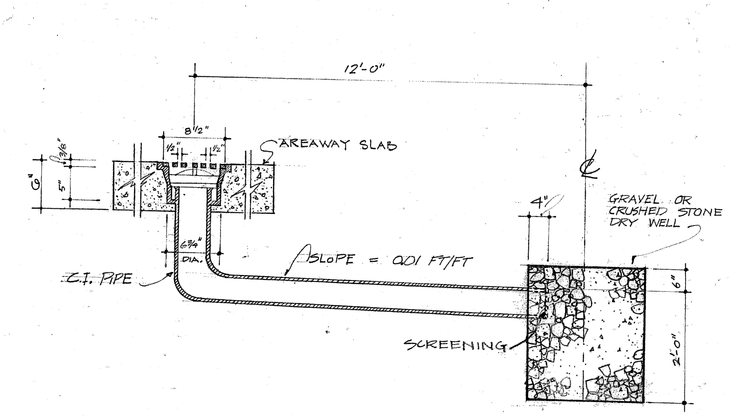

DRY WELL DETAIL
NOT TO SCALE

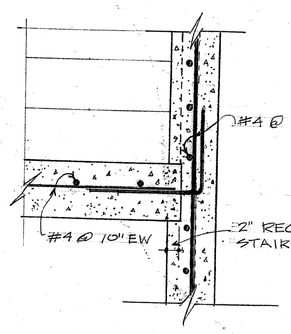

DETAIL 'A'
SCALE 1" 1'-0"

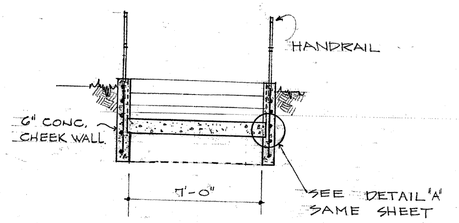

SECTION 3
SCALE 1/4" 1'-0"

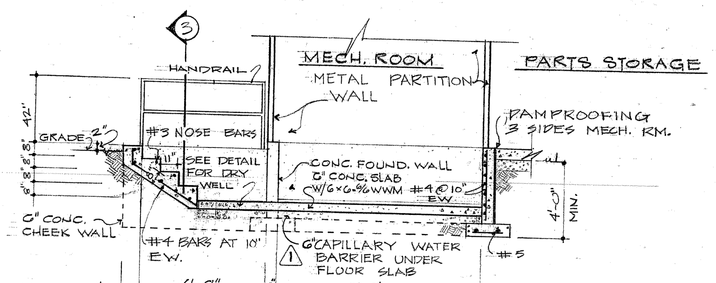

NOTE
HANDRAILS, CONC. STAIRS, DOUBLE DOOR, & DRY WELL ARE FOR BLDGS. 5, 6 FOR CONDITIONS AT BLDGS. NOS. 1, 2, 3, 4, 7, 8 SEE SKETCH NO. 7549-G19.1
2

SECTION 2/19/20/21
SCALE 1/4" 1'-0"

WILLARD (35KM)
New York District

RECORD DRAWING OF WORK AS BUILT

28

REVISION	DATE	DESCRIPTION	BY
3	2 SEP 1969		
2	7 FEB 69	ADDED NOTE 2	C.M.P.
1	15 OCT. 68	ADDED WALL FAN, VAPOR BARRIER & DEPTH OF CAP. WATER BARRIER	C.M.P.

DEPARTMENT OF THE ARMY
NEW YORK DISTRICT, CORPS OF ENGINEERS
NEW YORK, NEW YORK

DRAWN BY: Charles Pakagonis
CHECKED BY: Joseph Munno
DESIGNED BY: Charles Pakagonis
REVIEWED: R. A. Cannarelli, SECTION CHIEF

CAMP DRUM
ARMY NATIONAL GUARD (7)
STORAGE, MAINTENANCE & MISC. FACILITIES
AUTOMOTIVE MAINTENANCE SHOP
ELEVATION & SECTION
WATERTOWN NEW YORK

SUBMITTED: M. N. Fiedler, CHIEF, DESIGN BRANCH
RECOMMENDED: Frank A. Panuzio, CHIEF, ENGINEERING DIVISION
APPROVED: COLONEL, C. E., DISTRICT ENGINEER
DATE 15 AUG. 1968
SCALE AS SHOWN
DRAWING NUMBER
SHEET 21 OF 24

FILE NO. 7549-G21 (21)

18-1-21

189

18-1-24