INDEX OF DRAWINGS

SHEET NO.	DRAWING TITLE
G-001	COVER SHEET
G-002	INDEX OF DRAWINGS
G-003	ABBREVIATIONS & SYMBOLOGY
	SURVEY
V-101	SURVEY
V-102	SURVEY
V-103	SURVEY
V-104	SURVEY
V-105	SURVEY
V-106	SURVEY
V-107	SURVEY
V-108	SURVEY
V-109	SURVEY
V-110	SURVEY
V-111	SURVEY
V-112	SURVEY
	GEOTECHNICAL
B-601	SUBSURFACE EXPLORATION - BORING LOGS
	CIVIL
CD-101	DEMOLITION PLAN
CS-101	SITE PLAN
CG-101	GRADING AND DRAINAGE PLAN
CG-102	GRADING AND DRAINAGE PLAN
CU-101	UTILITY PLAN
CE-101	EROSION AND SEDIMENT CONTROL PLAN
CE-102	EROSION AND SEDIMENT CONTROL PLAN
CS-501	FENCE DETAILS
CS-502	FENCE DETAILS
CS-503	FENCE DETAILS
CS-504	SITE DETAILS
CS-505	OUTLET STRUCTURE DETAILS
CP-501	SITE DETAILS PAVEMENT SECTIONS
CU-501	SITE DETAILS
CU-502	SITE DETAILS
CE-501	SOIL EROSION AND SEDIMENT CONTROL DETAILS
	STRUCTURAL
S-001	STRUCTURAL NOTES
S-101	FOUNDATION PLAN
S-102	FIRST FLOOR PLAN 1 OF 2
S-102A	FIRST FLOOR PLAN 2 OF 2
S-103	SECOND FLOOR & ATTIC FLOOR PLANS
S-201	TYPICAL FRAME ELEVATIONS
S-401	ARMS VAULT PLAN & DETAILS
S-501	FOUNDATION SECTIONS & DETAILS
S-502	MISCELLANEOUS DETAILS

SHEET NO.	DRAWING TITLE
	ARCHITECTURAL
A-100	FIRST FLOOR PLAN
A-101	FIRST FLOOR PLAN (CONTINUED)
A-101A	SECOND FLOOR PLAN
A-102	ATTIC PLAN
A-103	ROOF PLAN & DETAIL
A-104	ROOF PLAN (CONTINUED) & DETAILS
A-105	FURNITURE PLAN
A-200	ELEVATIONS
A-201	ELEVATIONS
A-300	SECTIONS
A-301	LONGITUDINAL SECTION
A-400	STAIR ENLARGED PLANS & SECTIONS
A-401	STAIR DETAILS
A-402	ENLARGED INT. & EXT. STAIRS SECTIONS & DETAILS
A-403	ENLARGED TOILET FLOOR PLANS & DETAILS
A-403A	CERAMIC TILE LAYOUT
A-404	MILLWORK ELEVATIONS & DETAILS
A-500	WALL SECTIONS
A-501	MISCELLANEOUS DETAILS - 1
A-502	MISCELLANEOUS DETAILS - 2
A-503	MISCELLANEOUS DETAILS - 3
A-504	MISCELLANEOUS DETAILS - 4
A-505	ENLARGED CANOPY SECTION & DETAILS
A-506	PARTITION TYPES
A-507	PARTITION LATERAL SUPPORT DETAILS
A-508	MISCELLANEOUS DETAILS - 5
A-600	FINISH SCHEDULE
A-601	DOOR & LOUVER SCHEDULE AND DETAILS
A-602	DOOR & WINDOW SCHEDULE AND DETAILS
A-603	DOOR & WINDOW DETAILS
A-700	FIRST FLOOR PLAN REFLECTED CEILING
A-701	FIRST FLOOR PLAN REFLECTED CEILING (CONTINUED)
A-702	SECOND FLOOR PLAN REFLECTED CEILING
A-703	SUSPENDED CEILING DETAILS
A-800	INTERIOR & EXTERIOR SIGNAGE
A-801	INTERIOR & EXTERIOR SIGNAGE SCHEDULE
A-900	LIFE SAFETY PLAN- FIRST FLOOR PLAN
A-901	LIFE SAFETY PLAN - SECOND FLOOR PLAN

SHEET NO.	DRAWING TITLE
	FIRE PROTECTION
FA-100	FIRST FLOOR WEST FIRE ALARM PLAN
FA-101	FIRST FLOOR EAST FIRE ALARM PLAN
FA-102	SECOND FLOOR FIRE ALARM PLAN
FS-100	FIRST FLOOR WEST FIRE SPRINKLER PLAN
FS-101	FIRST FLOOR EAST FIRE SPRINKLER PLAN
FS-102	SECOND FLOOR FIRE SPRINKLER PLAN
	PLUMBING
P-001	LEGEND, SYMBOLS, NOTES & ABBREVIATIONS
P-100	1st FLR PLAN - PLUMBING (SHEET 1)
P-101	VEH PROC/ADMIN/CLASS RM 1st FLR PLAN - PLUMBING
P-102	VEH PROC/ADMIN/CLASS RM 2nd FLR PLAN - PLUMBING
P-103	1st FLR PLAN - STORM DRAIN (SHEET 1)
P-104	1st FLOOR PLAN - STORM DRAIN (SHEET 2)
P-105	2nd FLR PLAN - STORM DRAIN
P-400	PART PLAN - FIRST FLOOR PLUMBING (DCW & DHW)
P-401	PART PLAN - FIRST FLOOR PLUMBING (SEWER)
P-402	PART PLAN - 2nd FLR PLUMBING (DCW, DHW, SEWER)
P-500	DETAILS - PLUMBING
P-600	PLUMBING SCHEDULES AND SCHEMATICS
P-601	PLUMBING RISER DIAG. - (DCW & DHW)
P-602	PLUMBING RISER DIAGRAM (SEWER)
	MECHANICAL
M-001	SYMBOLS & ABBREVIATIONS HVAC
M-002	GENERAL NOTES
M-100	VEHICLE PROC. / ADMIN. / WHSE BUILDING, VEHICLE TAILPIPE EXHAUST SYSTEM
M-101	VEHICLE PROC. / ADMIN. / WHSE BUILDING, HEATING & VENTING PLAN
M-102	VEHICLE PROC. / ADMIN. / WHSE BUILDING, INFRA-RED HEATING PLAN 1
M-103	VEHICLE PROC. / ADMIN. / WHSE BUILDING, INFRA-RED HEATING PLAN 2
M-104	VEHICLE PROC. / ADMIN. / WHSE BUILDING, FIRST FLOOR HYDRONIC HEATING PIPING PLAN
M-105	VEHICLE PROC. / ADMIN. / WHSE BUILDING, SECOND FLOOR HYDRONIC HEATING PIPING PLAN
M-106	VEHICLE PROC. / ADMIN. / WHSE BUILDING, ADMIN AREA FIRST FLOOR HVAC PLAN
M-107	VEHICLE PROC. / ADMIN. / WHSE BUILDING, ADMIN AREA SECOND FLOOR HVAC PLAN
M-300	HVAC SECTIONS
M-400	FIRST FLOOR MECHANICAL ROOM PART PLAN
M-401	ATTIC HVAC PART PLAN
M-402	ATTIC PIPING PART PLAN
M-500	SEISMIC DETAILS - 1
M-501	SEISMIC DETAILS - 2
M-502	SEISMIC DETAILS - 3
M-503	MECHANICAL DETAILS - 1

SHEET NO.	DRAWING TITLE
	MECHANICAL (CONTINUED)
M-504	MECHANICAL DETAILS - 2
M-505	MECHANICAL DETAILS - 3
M-600	MECHANICAL SCHEDULES - 1
M-601	MECHANICAL SCHEDULES - 2
M-602	MECHANICAL SCHEDULES - 3
M-700	CONTROLS, AIR HANDLING UNIT, FLOWW DIAGRAM SHEET 1
M-701	CONTROLS, AIR HANDLING UNIT, FLOWW DIAGRAM SHEET 2
	ELECTRICAL/TELECOMMUNICATIONS
E-001	ELECTRICAL LEGEND, ABBREVIATIONS & GENERAL NOTES
E-101	FIRST FLOOR PLAN - LIGHTING I
E-102	FIRST FLOOR PLAN - LIGHTING II
E-103	SECOND FLOOR PLAN & ATTIC FLOOR PLAN - LIGHTING
E-104	FIRST FLOOR PLAN - POWER & COMMUNICATIONS I
E-105	FIRST FLOOR PLAN - POWER & COMMUNICATIONS II
E-106	SECOND & ATTIC FLOOR PLAN - POWER & COMMUNICATIONS
E-107	ROOF PLAN - LIGHTNING PROTECTION SYSTEM & GROUNDING SYSTEM I
E-108	ROOF PLAN - LIGHTNING PROTECTION SYSTEM & GROUNDING SYSTEM II
E-401	ELECTRICAL SITE PLAN
E-501	ELECTRICAL DETAILS I
E-502	ELECTRICAL DETAILS II
E-503	ELECTRICAL DETAILS III
E-504	ELECTRICAL DETAILS IV
E-601	SINGLE LINE DIAGRAM
E-602	PANEL SCHEDULES I
E-603	PANEL SCHEDULES II
E-604	PANEL SCHEDULES III
E-605	LIGHTING FIXTURE DETAILS
E-606	LIGHTING FIXTURE SCHEDULE & DETAILS

FILE NUMBER	DRAWING TITLE
7549-607	SITE PLAN (BUILDING1555)
7549-619	FLOOR PLAN (BUILDING 1555)
7549-620	ELEVATIONS (BUILDING 1555)
7549-621	ELEVATIONS AND SECTION (BUILDING 1555)

US Army Corps of Engineers
New York District

Symbol	Description	Date	Appr.
1	REVISION #1	11 AUG 2005	

Designed by: NAME
Dwn by: NAME
Ckd by: NAME
Reviewed by: NAME
Submitted by: NAME
Date: 00 XXX 2005
Scale: AS
Solicitation no.: DACA51-A-0000
Contract no.: DACA51-A-00-0000
Project Manager: Page - Sheet/Page: 2/Page
Date: 22/08/2005 10:09:00

U.S. ARMY ENGINEER DISTRICT
CONTRACTING DIVISION
NEW YORK, NEW YORK

FN 37708
FORCE MODERNIZATION TRANSITIONAL FACILITY
FORT DRUM, NEW YORK

INDEX OF DRAWINGS

Sheet reference number:
G-002

SHEET FILE: S:\CADD\ENGINEERING\MODERN_BARR_DWG-S-0484-R.dgn

SUBMITTED BY: E3ENDFWB
S:\FILEROOM\MILITARY\FORT DRUM\FORCEMOD\GENERAL\SHEET FILES\90% SUBMISSION\FORCEMOD57708_GI002XX.DGN
PLOT DATE: 22-AUG-2005 11:43

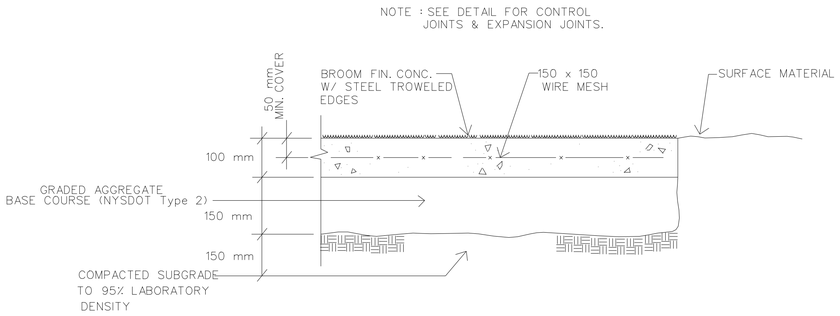

CONC. WALK DETAIL

N.T.S.

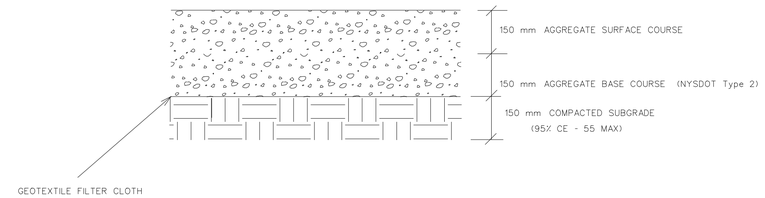

GRAVEL PAVEMENT SECTION

N.T.S.

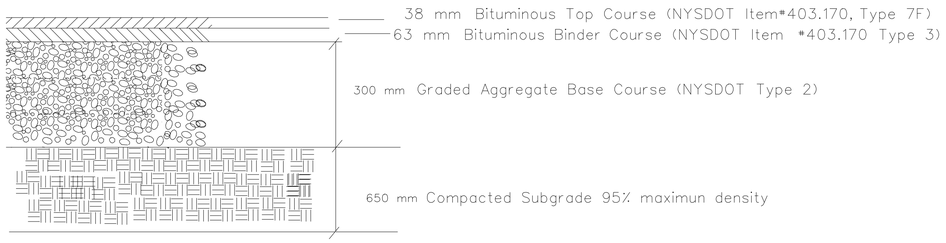

PAVING DETAIL FOR POV PARKING LOT AND ACCESS ROAD

N.T.S.

E.J.-C.J. DETAIL

N.T.S.

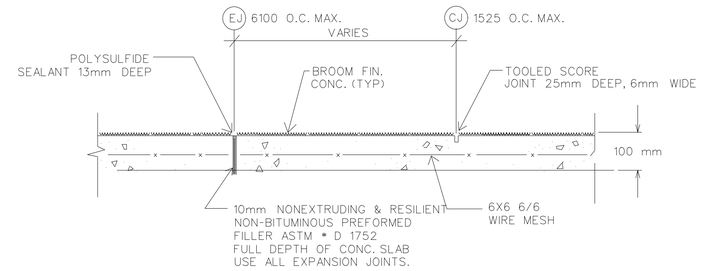

CONC. SIDEWALK

CO.J.-C.J. DETAIL

N.T.S.

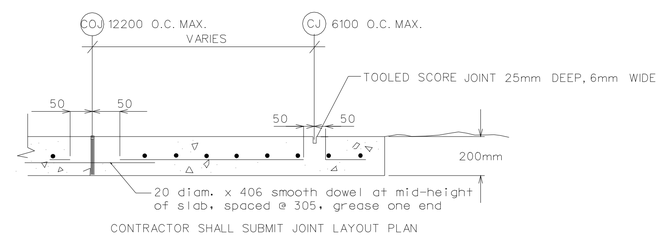

CONTRACTOR SHALL SUBMIT JOINT LAYOUT PLAN

CONC. APRON

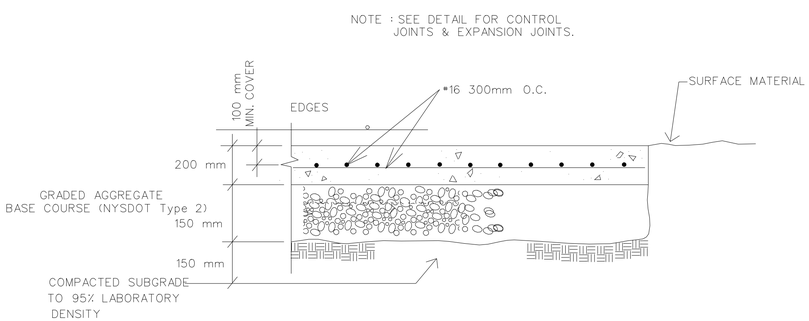

CONC. APRON DETAIL

N.T.S.

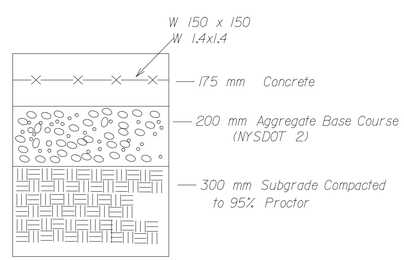

EQUIPMENT AND DUMPSTER PAD

N.T.S.

US Army Corps of Engineers
New York District

Symbol	Description	Date	Appr.
1	REVISION REPLACE ORIGINAL SHEET	09-17-05	

Designed by: | Date: | Dwn by: | Chkd by: | Reviewed by: | Submitted by: | Recommended for approval: | Date: | Sign: All | Solicitation no.: | Contract no.: | Project Eng: | Project Mgr: | Date: | Submittal Status:

U.S. ARMY ENGINEER DISTRICT
CORPS OF ENGINEERS
NEW YORK, NEW YORK

FORCE MODERNIZATION IN 5709
FORT DRUM, NEW YORK
DIVISION OF MANEUVER /TRANSITIONAL FACILITY

SITE DETAILS PAVEMENT SECTIONS

Sheet reference number:
CP-501

SUBMITTED BY: E3ENDFWB
S:\FILEROOM\MILITARY\FORT DRUM\FORCEMOD\CIVIL\FORCEMOD57708_CP_501.DGN
PLOT DATE: 22-AUG-2005 11:51

GENERAL

1. ALL WORK SHALL CONFORM TO APPLICABLE REQUIREMENTS OF US ARMY CORPS OF ENGINEERS REGULATIONS, FT. DRUM DPW REGULATIONS, LOCAL GOVERNING CODES, STATE CONSTRUCTION AND ENERGY CONSERVATION CODES, HEALTH CODES, FIRE DEPARTMENT REGULATIONS, NFPA LIFE SAFETY CODES, NATIONAL BOARD OF FIRE UNDERWRITERS (NBFU) CODES, OSHA REGULATIONS AND OTHER APPLICABLE BUILDING CODES AND REGULATIONS.
2. CONTRACTOR SHALL COORDINATE WORK WITH ALL TRADES AND DISCIPLINES AS REQUIRED.
3. CONTRACTOR SHALL REPORT ANY DISCREPANCIES IN DIMENSIONS BETWEEN STRUCTURAL AND OTHER DISCIPLINE'S DRAWINGS TO THE CONTRACTING OFFICERS REPRESENTATIVE IMMEDIATELY
4. SEE ARCHITECTURAL, MECHANICAL, ELECTRICAL AND DRAWINGS FOR SIZE AND LOCATION OF ALL OPENINGS IN ROOF, FLOORS AND WALLS NOT SHOWN ON STRUCTURAL DRAWINGS.
5. CONTRACTOR SHALL COORDINATE AND VERIFY ALL ARCHITECTURAL, MECHANICAL, ELECTRICAL AND ALL OTHER PLANS, ELEVATIONS, SECTIONS, DETAILS NOT SHOWN ON THE STRUCTURAL DRAWINGS.
6. CONTRACTOR SHALL COORDINATE WITH MATERIAL FABRICATOR(S) REGARDING ALL LOCATIONS AND DIMENSIONS OF ALL OPENINGS IN ROOF, FLOORS, WALLS, ETC. REQUIRED FOR MECHANICAL, ELECTRICAL, AND ALL OTHER EQUIPMENT.
7. ALL DIMENSIONS OF EXISTING CONDITIONS SHOWN ARE APPROXIMATE; CONTRACTOR SHALL MAKE ALL NECESSARY FIELD MEASUREMENTS OF THE SITE, INCLUDING ANY EXISTING STRUCTURES AND EQUIPMENT, TO VERIFY DIMENSIONS SHOWN ON DRAWINGS AND TO PROVIDE DIMENSIONS NOT SHOWN, PRIOR TO FABRICATION. COSTS FOR MODIFICATIONS OF NEW CONSTRUCTION, DUE TO LACK OF CONFIRMATION OF DIMENSIONS BY FIELD MEASUREMENTS SHALL BE BORNE BY THE CONTRACTOR.
8. MINOR DETAILS NOT USUALLY SHOWN OR SPECIFIED, BUT NECESSARY FOR PROPER AND ACCEPTABLE CONSTRUCTION, INSTALLATION OR OPERATION OF ANY PART OF THE WORK, AS DETERMINED BY THE CONTRACTING OFFICER'S REPRESENTATIVE SHALL BE INCLUDED IN THE WORK THE SAME AS IS HEREIN SPECIFIED OR INDICATED.

CODES AND SPECIFICATIONS

1. GENERAL: UNLESS OTHERWISE NOTED, THE MOST CURRENT VERSION OF THE CODE AND/OR SPECIFICATION LISTED BELOW SHALL GOVERN ALL WORK.
2. INTERNATIONAL BUILDING CODE (IBC) 2003.
3. AMERICAN SOCIETY OF CIVIL ENGINEERS (ASCE) STANDARD 7, MINIMUM DESIGN LOADS FOR BUILDINGS AND OTHER STRUCTURES, 2002.
4. ASCE STANDARD 37. DESIGN LOADS ON STRUCTURES DURING CONSTRUCTION, 2002.
5. AMERICAN CONCRETE INSTITUTE (ACI), BUILDING CODE REQUIREMENTS FOR STRUCTURAL CONCRETE AND COMMENTARY, ACI-318 AND ACI 318-R.
6. AMERICAN INSTITUTE OF STEEL CONSTRUCTION. ALLOWABLE STRESS DESIGN (ASD) SPECIFICATION FOR STRUCTURAL STEEL BUILDINGS, 1989.
7. AISC CODE OF STANDARD PRACTICE.
8. METAL BUILDING MANUFACTURERS ASSOCIATION (MBMA) METAL BUILDING SYSTEMS MANUAL, 2002.
9. MBMA METAL ROOFING SYSTEMS DESIGN MANUAL, 2000.
10. AMERICAN IRON AND STEEL INSTITUTE (AISI), COLD-FORMED STEEL DESIGN MANUAL, 2002.
11. AISI NORTH AMERICAN SPECIFICATION FOR THE DESIGN OF COLD-FORMED STEEL STRUCTURAL MEMBERS AND COMMENTARY, 2002.
12. STEEL JOIST INSTITUTE (SJI), STANDARD SPECIFICATIONS, LOAD TABLES AND WEIGHT TABLES FOR STEEL JOISTS AND JOIST GIRDERS. 41ST ED., 2002.
13. STEEL DECK INSTITUTE (SDI), MANUAL OF CONSTRUCTION WITH STEEL DECK.
14. CRANE MANUFACTURERS ASSOCIATION OF AMERICA (CMAA), TOP RUNNING AND BRIDGE AND GANTRY TYPE MULTIPLE GIRDER ELECTRIC OVERHEAD TRAVELING CRANES, NO. 70, 2000.
15. ALUMINUM ASSOCIATION, ALUMINUM DESIGN MANUAL: SPECIFICATIONS AND GUIDELINES FOR ALUMINUM STRUCTURES, 2005.
16. U.S. DEPARTMENT OF DEFENSE, UNIFIED FACILITIES CRITERIA (UFC), UFC 1-200-01, GENERAL BUILDING REQUIREMENTS, 2005.
17. UFC 3-320-05, STRUCTURAL DESIGN CRITERIA FOR STRUCTURES OTHER THAN BUILDINGS, 2005.
18. UFC 4-010-01, DoD MINIMUM ANTITERRORISM STANDARDS FOR BUILDINGS, 2003.
19. REFER TO PROJECT SPECIFICATIONS FOR OTHER PERTINENT CODES AND SPECIFICATIONS.

DESIGN CRITERIA

1. WIND:

   BASIC WIND SPEED = 160 km/h

   EXPOSURE C, CATEGORY II, IMPORTANCE FACTOR 1
2. SNOW:

   GROUND SNOW LOAD, pg = 3.4 kPa

   Ce = 0.9, THE ROOF IS NOT A COLD ROOF, IMPORTANCE FACTOR = 1

   PARTIAL LOADING PROVISIONS OF ASCE 7 APPLICABLE

   UNBALANCED LOADING PROVISIONS OF ASCE 7 APPLICABLE
3. SEISMIC:

   SEISMIC DESIGN SHALL CONFORM TO IBC 2003, ASCE 7-02 AND UFC 3-310-03, SEISMIC DESIGN FOR BUILDINGS.

   Ss = 0.35g, S1 = 0.1g, SEISMIC USE GROUP I

   SITE CLASS C, CONTRACTOR SHALL VERIFY, AND ADJUST AS NECESSARY, SITE CLASS BASED ON AVAILABLE SOILS INFORMATION
4. ROOF LOADINGS:

   ROOF LIVE LOAD = 2.4 kPa.

   CONTRACTOR SHALL VERIFY, AND PROVIDE ADEQUATE STRUCTURAL SUPPORT SYSTEM(S) AS NECESSARY, APPLICABILITY OF PONDING, RAIN-ON-SNOW SURCHARGE, AND OTHER ROOF LOADS.

   SEE ARCHITECTURAL DRAWINGS FOR ROOF DRAINAGE REQUIREMENTS.
5. FLOOR LOADINGS:

   SECOND FLOOR DEAD LOAD = 2.6 kPa

   SECOND FLOOR LIVE LOAD = 4.8 kPa

   ATTIC FLOOR DEAD LOAD = 2.2 kPa

   ATTIC FLOOR LIVE LOAD = 4.8 kPa
6. MECHANICAL EQUIPMENT LOADS:

   CONTRACTOR SHALL COORDINATE AND VERIFY ALL LOADING AND SUPPORT REQUIREMENTS OF MECHANICAL EQUIPMENT NOT SHOWN IN THE STRUCTURAL DRAWINGS.

   CONTRACTOR SHALL BE RESPONSIBLE FOR COORDINATING, VERIFYING AND DESIGNING ALL NECESSARY SUPPORTS FOR ALL MECHANICAL EQUIPMENT LOADINGS.

   MECHANICAL EQUIPMENT SHALL BE PLACED ON SKIDS, CURBS OR OTHER SUPPORTING STRUCTURE(S) TO AVOID APPLYING CONCENTRATED LOADS ON BUILDING ELEMENTS.
7. OTHER LOADS:

   CONTRACTOR SHALL DETERMINE ALL OTHER LOADS, AS-NECESSARY, PER ASCE 7, ASCE 32, IBC 2003, UFC 1-200-01 AND UFC 3-320-05. CONTRACTOR SHALL PROVIDE ALL LOAD DETERMINATION COMPUTATIONS AND OTHER INFORMATION TO THE CONTRACTING OFFICER'S REPRESENTATIVE.
8. LEVEL OF PROTECTION FOR WINDOWS AND GLAZED DOORS SHALL BE ?LOWO AS DESCRIBED IN UFC 4-010-01.

CONCRETE GENERAL

1. DO NOT PLACE CONCRETE UNTIL REINFORCING STEEL PLACEMENT HAS BEEN VERIFIED BY THE CONTRACTING OFFICER'S REPRESENTATIVE.
2. CONTRACTOR SHALL BE RESPONSIBLE FOR PREVENTION OF FLOATATION OF STRUCTURES DURING CONSTRUCTION.
3. EXPOSED CONCRETE CORNER CHAMFER = 25 mm UNO.
4. KEYWAY DIMENSIONS: DEPTH = 38 mm, WIDTH = 1/3 THAT OF MEMBER UNO.
5. ALL CONSTRUCTION JOINTS SHALL HAVE KEYWAYS UNO.
6. CONSTRUCTION JOINTS AS SHOWN MAY BE VARIED TO SUIT PLACING SEQUENCE PROVIDED THE RELOCATION, ADDITION, OR DELETION OF CONSTRUCTION JOINTS IS APPROVED BY THE CONTRACTING OFFICER'S REPRESENTATIVE PRIOR TO PREPARATION OF REINFORCING STEEL SHOP DRAWINGS.
7. PROVIDE WATERSTOPS AS SPECIFIED. SECURE WATERSTOPS TO PREVENT DISPLACEMENT OR FOLDING OVER DURING PLACEMENT OF CONCRETE. SECURE BY TYING WITH WIRE TO REINFORCING STEEL OR OTHER APPROVED METHOD.
8. PIPE AND PIPE SLEEVES ARE NOT SHOWN, SEE SPECIFICATIONS. FINAL LOCATION SHALL BE APPROVED BY THE CONTRACTING OFFICER'S REPRESENTATIVE. PROVIDE PIPE SLEEVE FOR ALL PIPES AND CONDUITS THAT PASS THROUGH CONCRETE. SLEEVES SHALL BE FLUSH IN STRUCTURAL ELEMENTS AND EXTEND SLEEVES IN FLOORS 100 mm ABOVE TOP OF FLOOR UNO.
9. PROVIDE SETTING TEMPLATES TO POSITION ANCHOR RODS (WHICH ALSO MAY BE REFERRED TO AS "ANCHOR BOLTS" FOR THIS PROJECT) PRIOR TO PLACING CONCRETE. CONTRACTOR SHALL ACCURATELY POSITION ANCHOR RODS TO ASSURE CORRECT VERTICAL AND HORIZONTAL LOCATION TO MATCH REQUIREMENTS OF THE METAL BUILDING SYSTEM. ANCHOR ROD PLACEMENT AND POSITIONING SHALL BE COORDINATED WITH THE REQUIREMENTS OF THE METAL BUILDING SYSTEM PROVIDED. CONTRACTOR SHALL PROVIDE WRITTEN PROOF OF COORDINATION TO THE CONTRACTING OFFICER'S REPRESENTATIVE PRIOR TO PLACEMENT OF CONCRETE.
10. ALL METAL FABRICATIONS EMBEDDED IN CONCRETE, OTHER THAN REINFORCING STEEL, SHALL BE HOT-DIP GALVANIZED AFTER FABRICATION IN ACCORDANCE WITH ASTM A123 AS APPLICABLE.
11. CONCRETE SHALL NOT BE LOADED UNTIL IT HAS ATTAINED SUFFICIENT STRENGTH TO SAFELY WITHSTAND LOADING AND UNTIL REQUIRED SHORING AND BRACING HAVE BEEN INSTALLED.
12. DO NOT PLACE LOADS WITHIN 1800 mm OF CONSTRUCTION JOINTS IN SLABS FOR AT LEAST 7 DAYS AFTER SLAB IS PLACED.
13. DO NOT PERFORM ANY OPERATIONS NEAR GROUND FLOOR SLAB PLACEMENT WHICH COULD CAUSE VIBRATION OR SETTLEMENT OF THE SUPPORTING SOIL STRATA FOR AT LEASE 7 DAYS AFTER SLAB IS PLACED.
14. CONSTRUCTION CRANES OR OTHER HEAVY ERECTION EQUIPMENT WILL NOT BE PERMITTED ON SLABS.

CONCRETE AND CONCRETE REINFORCEMENT

1. SEE PROJECT SPECIFICATIONS FOR PRODUCT REQUIREMENTS.

   UNLESS OTHERWISE NOTED, MIN f'c AT 28 DAYS = 27.5 MPa.

   MIN f'c AT 28 DAYS FOR ALL GRADE SLABS SHALL = 31.5 MPa.
2. CONCRETE REINFORCEMENT PLACEMENT SHALL CONFORM TO ACI 318, ACI SP-66, AND THE CONCRETE REINFORCING INSTITUTE (CRSI) MANUAL OF STANDARD PRACTICE. WELDED WIRE REINFORCEMENT SHALL CONFORM TO THE REQUIREMENTS OF THE WIRE REINFORCEMENT INSTITUTE (WRI) MANUAL OF STANDARD PRACTICE.
3. REINFORCING SHALL BE CONTINUOUS AROUND ALL CORNERS UNLESS SHOWN OTHERWISE.
4. SHIFT REINFORCING BARS TO CLEAR ANCHOR RODS AND EMBEDDED ITEMS. CUTTING OF REINFORCING BARS NOT PERMITTED.
5. REINFORCING STEEL SHALL BE CONTINUOUS THROUGH CONSTRUCTION JOINTS UNO.
6. TERMINATE ALL REINFORCING STEEL AT EXPANSION JOINTS UNO.
7. OBTAIN CONTRACTING OFFICER'S APPROVAL PRIOR TO WELDING REINFORCING STEEL. WELDING OF REINFORCING STEEL SHALL CONFORM TO AMERICAN WELDING SOCIETY (AWS) STRUCTURAL WELDING CODE - REINFORCING STEEL, AWS D1.4.
8. TACK WELDING TO REINFORCING BARS IS NOT PERMITTED.
9. REINFORCING BAR SPLICES ARE PERMITTED ONLY WHERE SHOWN OR APPROVED BY THE CONTRACTING OFFICER'S REPRESENTATIVE. MINIMUM BAR SPLICE LAP LENGTH SHALL BE AS SHOWN. WHERE LAP LENGTH IS NOT SHOWN ON DRAWINGS, USE MINIMUM LAP LENGTH (IN mm) AS FOLLOWS:

BAR SIZE	#10	#13	#16	#19	#22	#25	#29	#32	#36
TOP BARS	610	813	1016	1219	1778	2032	2286	2591	2870
OTHER BARS	483	635	787	940	1372	1575	1778	1981	2210

CLASS B SPLICE FOR fy = 414 MPa, f'c = 27.5 MPa, NORMAL WEIGHT CONCRETE, UNCOATED BARS WHERE:

CLEAR SPACING OF BARS ≥ 2 BAR DIAMETERS AND COVER ≥ BAR DIAMETER, OR

CLEAR SPACING OF BARS ≥ DIAMETER BAR AND COVER ≥ DIAMETER BAR, AND STIRRUPS OR TIES THROUGHOUT LAP NOT LESS THAN ACI 318 MINIMUM.

TOP BARS ARE DEFINED AS HORIZONTAL BARS PLACED SO THAT MORE THAN 305 mm OF CONCRETE IS CAST IN THE MEMBER BELOW THE BAR.

10. FOR SLAB REINFORCING BARS, PLACE BARS SPANNING IN THE SHORT DIRECTION WITH MINIMUM CONCRETE COVER SPECIFIED UNO.
11. EXTRA REINFORCING SHALL BE IN ADDITION TO THE REINFORCING SHOWN OR NOTED. OBTAIN APPROVAL OF CONTRACTING OFFICER'S REPRESENTATIVE TO ADD ANY EXTRA REINFORCING.
12. ALL BARS INDICATED AS BEING BENT SHALL HAVE STANDARD 90-DEGREE HOOKS UNO. 180-DEGREE HOOKS ARE AN ACCEPTABLE ALTERNATIVE WHERE APPROVED BY THE CONTRACTING OFFICER'S REPRESENTATIVE.
13. PROVIDE REINFORCING BAR DOWELS IN FOOTINGS OF THE SAME NUMBER, SPACING AND SIZE AS COLUMN, PIER OR WALL REINFORCING UNO.
14. ALL REINFORCING BARS SHALL BE SECURELY PLACED IN THEIR RESPECTIVE FINAL POSITION PRIOR TO PLACING CONCRETE. PLACING REINFORCING BARS INTO WET CONCRETE IS PROHIBITED.
15. MINIMUM REINFORCING CONCRETE COVER UNLESS OTHERWISE SHOWN SHALL BE 50 mm FOR #19 BARS AND LARGER FOR CONCRETE EXPOSED TO EARTH OR WEATHER, 75 mm WHEN DEPOSITED AGAINST EARTH, 19 mm FOR WALLS AND SLABS NOT EXPOSED TO EARTH OR WEATHER. MINIMUM REINFORCING CONCRETE COVER OTHERWISE SHALL BE 38 mm UNO.
16. UNO TOLERANCE FOR CONCRETE REINFORCEMENT PLACEMENT SHALL CONFORM TO ACI 318 AND ACI 117, STANDARD SPECIFICATIONS FOR TOLERANCES FOR CONCRETE CONSTRUCTION AND MATERIALS. CONCRETE REINFORCEMENT SHALL BE PLACED WITHIN THE FOLLOWING TOLERANCE RELATIVE TO FORMED OR UNFORMED CONCRETE SURFACE:

SPECIFIED COVER	TOLERANCE	
	D ≤ 200 mm	D > 200 mm
19 mm	-0, + 6 mm	-0, + 10 mm
38 mm OR GREATER	±10 mm	±13 mm

FOUNDATIONS

1. REQUIRED ALLOWABLE BEARING CAPACITY = 287 kPa.
2. FROST DEPTH PENETRATION = 1680 mm
3. FOOTING EXCAVATIONS SHALL BE INSPECTED BY THE CONTRACTING OFFICER'S REPRESENTATIVE PRIOR TO CONCRETE PLACEMENT.
4. ALL WALL FOOTINGS SHALL BE A MINIMUM OF 305 mm THICK AND PROJECT 150 mm MIN BEYOND ALL FACES OF FOUNDATION WALLS.
5. ALL FOOTINGS SHALL BE PLACED ON UNDISTURBED SOIL OR COMPACTED FILL CONFORMING TO THE PROJECT SPECIFICATIONS. THE CONTRACTOR SHALL RETAIN THE SERVICES OF A REGISTERED PROFESSIONAL ENGINEER SPECIALIZING IN GEOTECHNICAL ENGINEERING ("THE CONTRACTOR'S GEOTECHNICAL ENGINEER")TO VERIFY THE REQUIRED SOIL BEARING PRESSURE PRIOR TO PLACEMENT OF CONCRETE. SOILS NOT MEETING THE REQUIRED BEARING PRESSURE SHALL BE MODIFIED AS RECOMMENDED BY THE CONTRACTOR'S GEOTECHNICAL ENGINEER TO MEET THE REQUIRED PROJECT SPECIFICATIONS.

STRUCTURAL STEEL AND OTHER STEEL ITEMS

1. SEE PROJECT SPECIFICATIONS FOR PRODUCT REQUIREMENTS.
2. BEAM SHEAR CONNECTIONS SHALL BE PROVIDED TO SUPPORT A REACTION EQUAL TO ONE HALF THE TOTAL UNIFORM LOAD CAPACITY OF THE BEAM. AS SHOWN IN THE TABLE OF UNIFORM LOAD CONSTANTS OF THE AISC ASD MANUAL OF STEEL CONSTRUCTION, NINTH EDITION, FOR THE SIZE AND SPAN SHOWN. VERIFY AND DESIGN FOR LOAD REQUIREMENTS FOR UNSYMETRICALLY LOADED BEAMS, AS FOR EXAMPLE AT EQUIPMENT, PARTITION AND BEAM POINT LOADS.
3. MOMENT CONNECTIONS SHALL BE DESIGNED TO DEVELOP THE FULL ELASTIC MOMENT CAPACITY OF THE BEAM.
4. COLD-FORMED STEEL PURLINS AND GIRTS SHALL BE Z-SHAPED, GALVANIZED, Fy = 345 MPa.
5. PROVIDE TIE/SAG RODS AS REQUIRED.
6. UNLESS OTHERWISE NOTED, STRUCTURAL STEEL CONNECTIONS SHALL BE SHOP WELDED AND FIELD BOLTED. BOLTS SHALL BE 19 mm DIAMETER MINIMUM.
7. ALL CONNECTIONS NOT DETAILED SHALL BE DESIGNED BY THE FABRICATOR USING 1/2 THE ALLOWABLE BEAM LOAD PER AISC ASD MANUAL OF STEEL CONSTRUCTION UNO. USE STANDARD DOUBLE CLIP ANGLE CONNECTIONS AT ALL GIRDERS. USE DOUBLE CLIP ANGLES OR SHEAR PLATE CONNECTIONS AT BEAMS UNO.
8. ALL STRUCTURAL STEEL SHALL BE SHOP CLEANED PER THE SOCIETY FOR PROTECTIVE COATINGS (SSPC) SSPC SP6.
9. ALL EXPOSED EXTERIOR STRUCTURAL STEEL SHALL BE SHOP CLEANED, PRIME COATED AND COATED WITH A FINISH PAINS SYSTEM AS INDICATED IN THE PROJECT SPECIFICATIONS.
10. ALL NON-EXPOSED STEEL SHALL BE SHOP CLEANED AND PRIME COATED PER PROJECT SPECIFICATIONS.
11. OTHER STEEL ITEMS SUCH AS STAIRS SHALL BE IN CONFORMANCE WITH THE AISC CODE OF STANDARD PRACTICE.

LIGHT-GAUGE STEEL

1. SEE PROJECT SPECIFICATIONS FOR PRODUCT REQUIREMENTS.
2. LOAD-BEARING LIGHT-GAUGE STEEL MEMBERS SHALL COMPLY WITH UFC 3-310-04A, DESIGN OF COLD-FORMED LOAD BEARING STEEL SYSTEMS.
3. NON-LOAD BEARING LIGHT-GAUGE STEEL FRAMING SHALL BE DESIGNED IN CONFORMANCE WITH THE STEEL FRAMING ALLIANCE'S PRESCRIPTIVE METHOD FOR RESIDENTIAL COLD-FORMED STEEL FRAMING, STEEL WALL GUIDE, BUILDER'S STEEL STUD GUIDE, AND LIGHT GAUGE STEEL ENGINEERS ASSOCIATION (LGSEA) TECHNICAL NOTE 542 INTRODUCTION TO CURTAIN WALL DESIGN USING COLD-FORMED STEEL.

STEEL DECK

1. SECOND STORY AND ATTIC FLOORING SHALL BE COMPRISED OF LIGHTWEIGHT CONCRETE ON REINFORCED STEEL DECKING AS SHOWN IN THE DRAWINGS. STEEL DECK SHALL BE DESIGNED AND DETAILED IN ACCORDANCE WITH THE PROVISIONS OF THE STEEL DECK INSTITUTE AS DESCRIBED IN THE PROJECT SPECIFICATIONS.
2. STEEL DECK SUPPLIER SHALL PROVIDE LIGHT GAUGE METAL DECK CLOSURE PIECES AND SHALL REINFORCE OR SUPPORT DECK AT OPENINGS, COLUMN AREAS, CONNECTIONS TO STAIR ASSEMBLIES AS REQUIRED, IN ACCORDANCE WITH THE PROVISIONS OF THE STEEL DECK INSTITUTE AS DESCRIBED IN THE PROJECT SPECIFICATIONS.
3. STEEL FLOOR DECK MATERIAL SHALL BE 0.75 mm THICK (GALVANIZED) AND STEEL DECK SHALL BE DESIGNED TO SUPPORT A 102 mm THICK SLAB REINFORCED WITH WELDED WIRE REINFORCEMENT. STEEL DECK WILL HAVE DEFORMATIONS TO PROVIDE MECHANICAL BOND WITH CONCRETE.
4. LIGHTWEIGHT CONCRETE TO BE PLACED ON FLOOR DECKING SHALL HAVE MINIMUM 28-DAY f'c = 20 MPa. LIGHTWEIGHT CONCRETE REINFORCEMENT SHALL BE 152X152-MW19 X MW19 AND SHALL CONFORM TO THE PROVISIONS OF THE WIRE REINFORCEMENT INSTITUTE.
5. WELDING OF STEEL DECK SHALL CONFORM TO AWS D1.3.

STEEL JOISTS

1. CONTRACTOR SHALL PROVIDE SUPPORTS FOR STEEL FLOOR DECKING USING OPEN WEB STEEL JOISTS AND GIRDERS, K-SERIES, BRIDGING, AND ACCESSORIES THAT MEET THE STEEL JOIST INSTITUTE STANDARD SPECIFICATIONS, LOAD TABLES AND WEIGHT TABLES FOR STEEL JOISTS AND JOIST GIRDERS
2. CONTRACTOR SHALL COORDINATE WITH MANUFACTURER AND SHALL VERIFY THAT JOIST SIZES SHOWN ARE ADEQUATE TO SUPPORT ALL DEAD LOADS AND LIVE LOADS AT THE SLOPE AND SPANS AS INDICATED ON THE PLAN AND IN THE GENERAL NOTES. JOIST CHORDS AND WEB MEMBERS SHALL BE INCREASED IN SIZE AS REQUIRED.
3. CONTRACTOR SHALL COORDINATE WITH MANUFACTURER AND SHALL VERIFY JOIST SIZES SHOWN ARE ADEQUATE TO SUPPORT MECHANICAL EQUIPMENT AND DUCTWORK AS INDICATED ON MECHANICAL, ELECTRICAL, ARCHITECTURAL AND OTHER DRAWINGS. VERIFY LOADING OF EQUIPMENT TO BE INSTALLED AT THEIR APPROPRIATE LOCATION.
4. PROVIDE BRIDGING AND LATERAL BRACING AS REQUIRED.

WELDING

1. STEEL:

   WELDING OF STRUCTURAL STEEL AND OTHER STEEL ITEMS SHALL BE IN ACCORDANCE WITH AWS D1.1 STRUCTURAL WELDING CODE - STEEL.

   ALL GROOVE WELDS SHALL BE FULL PENETRATION.

   WHERE FILLET WELD SIZE IS NOT SHOWN, MINIMUM SIZE SHALL BE 5 mm.

   ALL WELDS SHALL BE SHOP WELDS (TYPICAL UNLESS OTHERWISE SHOWN OR APPROVED).
2. ALUMINUM:

   WELDING OF ALUMINUM SHALL BE IN ACCORDANCE WITH AWS D1.2 STRUCTURAL WELDING CODE - ALUMINUM.
3. SHEET STEEL:

   WELDING OF SHEET STEEL (AND THICKNESS-LIMITED LIGHT GAUGE STEEL MEMBERS - SEE PROJECT SPECIFICATIONS - AS APPROPRIATE) SHALL BE IN ACCORDANCE WITH AWS D1.3 STRUCTURAL WELDING CODE - SHEET STEEL.

METAL BUILDING SYSTEMS

1. PROVIDE SINGLE-SPAN RIGID FRAMES WITH PINNED COLUMN ENDS, TRANSFERRING NO MOMENTS TO FOUNDATIONS.
2. PROVIDE MULTI-STORY RIGID FRAMES, WITH PINNED COLUMN ENDS AS ABOVE, FOR ADMINISTRATIVE CORE OF BUILDING AS SHOWN ON THE DRAWINGS.
3. DESIGN THE FRAMING FOR ALL EFFECTS OF WIND, SNOW, SEISMIC, LIVE AND DEAD LOADS INCLUDING CATENARY FORCES PER LOADING COMBINATION REQUIREMENTS OF ASCE 7. THE DESIGN SHALL INCLUDE A COLLATERAL LOAD OF 246 Pa APPLIED TO THE ROOF.
4. PRIMARY FRAMING SHALL BE APPROPRIATELY BRACED AGAINST LATERAL LOADS, LATERAL TORSIONAL BUCKLING, ROOF DIAPHRAGM LOADS, ETC. SECONDARY FRAMING MEMBERS SHALL BE APPROPRIATELY BRACED AGAINST LATERAL TORSIONAL BUCKLING, PURLIN ROLL, GIRT SAGGING, ETC. OVERHEAD COILING DOOR OPENINGS SHALL BE FRAMED WITH HOLLOW STRUCTURAL SECTIONS (HSS). COLD-FORMED CHANNEL JAMS ARE NOT PERMITTED.
5. PROVIDE CHANNEL-TYPE PURLIN BRACING AT INTERVALS NOT EXCEEDING 1/4 SPAN. PROVIDE ANTIROLL CLIPS AT ALL PURLIN BEARING POINTS.
6. LIMIT LATERAL BARE-FRAME DRIFT UNDER ANY DESIGN LOAD COMBINATION TO H/400 FOR SECTIONS WITH INTERIOR PARTITIONS OR FINISHED ATTACHED TO FRAME (H/200 FOR OTHER CASES).
7. LIMIT THE MAXIMUM COMBINED VERTICAL DEFLECTION OF PURLINS AND FRAMES TO L/240 UNDER DESIGN SNOW OR ROOF LIVE LOAD.
8. LIMIT THE MAXIMUM HORIZONTAL DEFLECTION OF GIRTS SUPPORTING STEEL STUDS WITH DRYWALL FINISH TO L/240 UNDER DESIGN WIND LOADING.
9. PERMANENT BUILDING BRACING MAY BE INSUFFICIENT DURING ERECTION. DESIGN AND PROVIDE TEMPORARY LATERAL BRACING DURING CONSTRUCTION UNTIL PERMANENT BRACING IS IN PLACE.
10. CONTRACTOR SHALL COORDINATE WITH THE CONTRACTING OFFICER'S REPRESENTATIVE FOR DESIGN OF THE FOUNDATIONS TO FIT THE PROVIDED METAL BUILDING SYSTEM.
11. COLUMN AND BASE PLATE SIZES SHALL ALLOW FOR A MINIMUM ANCHOR ROD EDGE DISTANCE OF 178 mm TO ANY VERTICAL EDGE OF CONCRETE. BASE PLATE SIZES SHALL BE DESIGNED TO FIT ON THE FOUNDATION PIERS DESIGNED BY THE CONTRACTING OFFICER'S REPRESENTATIVE.
12. PROVIDE BOTTOM-FLANGE ANGLE BRACING. PROVIDE BACKUP PLATES (MIN 150 mm WIDE X 19 mm THICK) BEHIND ALL BRACE ROD CONNECTIONS TO FRAME WEBS. WELD PLATES TO FRAME FLANGES.
13. CABLES SHALL NOT BE PERMITTED TO BE USED AS WALL AND ROOF BRACING. CONTRACTOR SHALL DESIGN BACKUP PLATES WITH WELDED CONNECTIONS BEHIND ALL BRACE ROD CONNECTIONS TO FRAME WEBS.
14. STRUCTURAL SUPPORTS SHALL NOT INTERFERE, ENTER OR DISRUPT THE FUNCTIONAL AREAS OF THE BUILDINGS; PRIMARY AND SECONDARY FRAMING, CROSS BRACING (AS REQUIRED), AND OTHER STRUCTURAL SUPPORTING ELEMENTS SHALL NOT INTERFERE WITH EQUIPMENT PLACEMENT, DUCTWORK, WINDOW LOCATIONS, DOOR WAYS AND INTERIOR SPACES; ALL FRAMING SHALL BE COORDINATED WITH ARCHITECTURAL REQUIREMENTS.

US Army Corps of Engineers
New York District

U.S. ARMY ENGINEER DISTRICT
CORPS OF ENGINEERS
NEW YORK, NEW YORK

DES. BR. CIVIL ENG. DES. SEC.
CENAN-EN-DC

PN 57708
FORCE MODERNIZATION EDUCATION /TRANSITIONAL FACILITY
FORT DRUM, NEW YORK

STRUCTURAL NOTES

Submitted by: e3endsbo Plot Date: 19-AUG-2005 17:01
S:øfileroomømilitaryøFort DrumøForceMODøStructuraløSHEET FILESøForceMOD57708_S-001AM1.dgn

SPECIAL NOTE FOR DIMENSIONS WITH ASTERISK:

CONTRACTOR SHALL VERIFY THOSE DIMENSIONS AND ADJUST THEM AS NECESSARY ACCORDING TO THE FOLLOWING TWO CRITERIA:

1. THE BUILDING ENVELOPE DIMENSIONS AS SHOW ON A-100 & A-101 SHALL REMAIN.
2. THE DISTANCE FROM CENTERLINE OF COLUMN TO FACE OF EXTERIOR WALL IS TO BE DETERMINED PER FINAL PRE-ENGINEERED METAL BUILDING DESIGN.

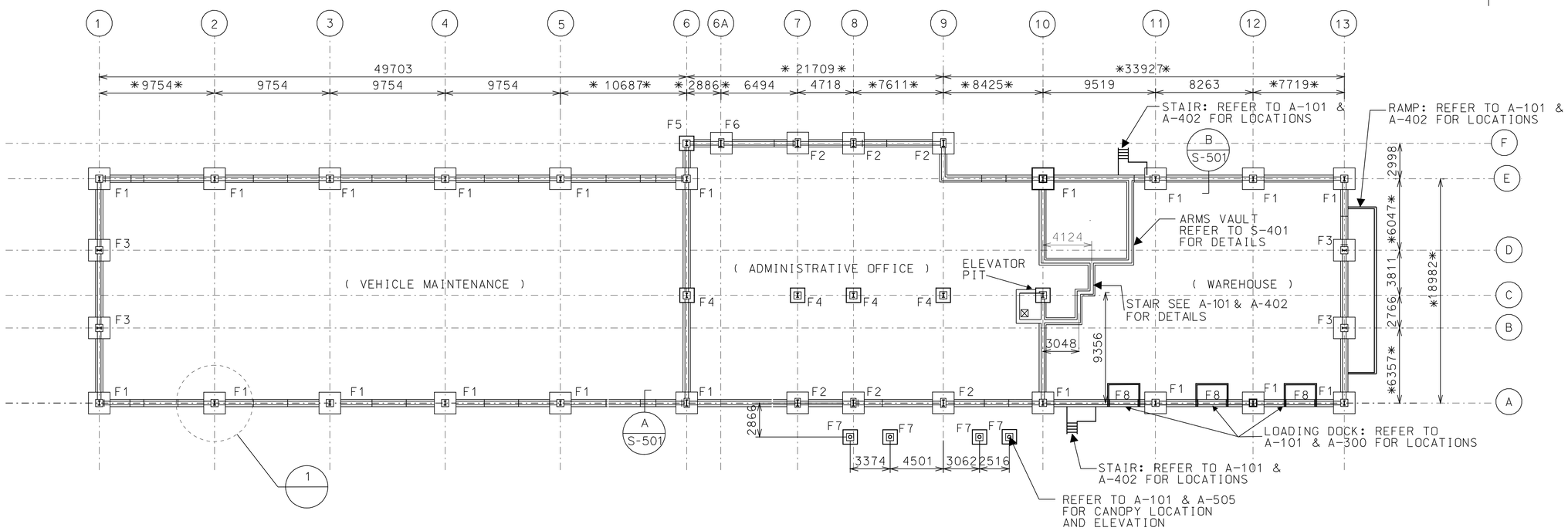

FOUNDATION PLAN

4000 2000 0 4000 8000
SCALE: 1 : 200

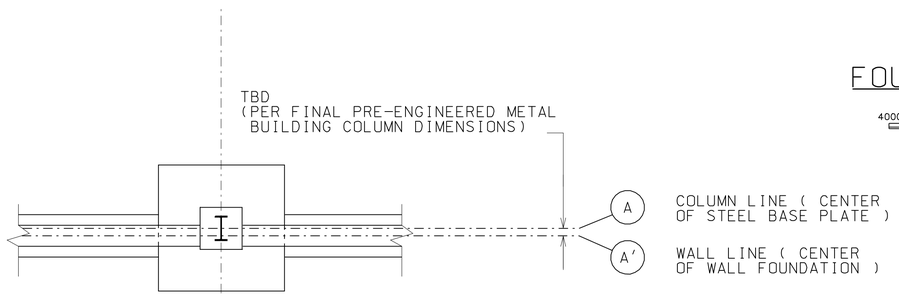

NOTES:

1. SEE A-500 FOR EXTERIOR WALL SECTION AND DETAILS. EDGE OF METAL GIRT IS FLUSH WITH EXTERIOR FLANGE OF STEEL COLUMN.
2. SIMILAR CASES ARE AT COLUMN LINES (E), (F), (1) & (13)

(1) FOUNDATION PLAN DETAIL -TYPICAL

NTS

NOTES:

1. SEE S-001 FOR GENERAL STRUCTURAL NOTES, DESIGN CRITERIA AND CONSTRUCTION REQUIREMENTS.
2. SEE S-501 & S-502 FOR FOUNDATION SECTIONS & DETAILS.
3. TOP OF WALL FOUNDATION SHALL BE FLUSH WITH FIRST FLOOR SLAB AT EACH ENTRANCE. SEE A-100 AND A-101 FOR ALL ENTRANCE LOCATIONS AND DIMENSIONS.
4. SEE CIVIL DRAWINGS FOR SITE PLAN, PAVEMENT LAYOUT, SUB-BASE PREPARATION AND REQUIREMENTS
5. SEE S-502 FOR RAMP, STAIR, LOADING DOCK SECTIONS AND DETAILS.
6. SEE S-401 FOR ARMS VAULT PLAN DETAILS.

US Army Corps of Engineers
New York District

Mark	Description	Date	Appr.
1	REVISION, REPLACES ORIGINAL SHEET	1st AUG 2005	

U.S. ARMY ENGINEER DISTRICT
CORPS OF ENGINEERS
NEW YORK, NEW YORK

Designed by: SDO
Date: 08 AUG 2005
Drawn by: SDO
Cad by: DAR
Reviewed by: MKD
Contract No.: DACA51-A-05-0000
Delivery Order No.: DACW51-1-05-0999
Submitted by:
Plot date: 19-AUG-2005 17:01
Plot by: Ryan Rate: 1:200/0:1:200/0
File name: S:\filerooms\military\Fort Drum\Formatted\Structural\SHEET FILES\FormatWorking & S-B001.dgn

DES. BR. CIVIL ENG. DES. SEC.
STRUCTURAL TEAM
CENAN-EN-DC-S

PN: 57708
FORCE MODERNIZATION SEN AVIATION /TRANSITIONAL FACILITY
FORT DRUM, NEW YORK

FOUNDATION PLAN

Sheet reference number:
S-101

Submitted by: e3endsbo
S:\filerooms\military\Fort Drum\Formatted\Structural\SHEET FILES\FormatWorking\MODS57708_S-SB001.dgn
Plot Date: 19-AUG-2005 17:01

SHEET FILE: S:\CADD SYNCHRONIZE\wing new\SPONSOR_SHEET_2005-S-SB04-A1.dgn

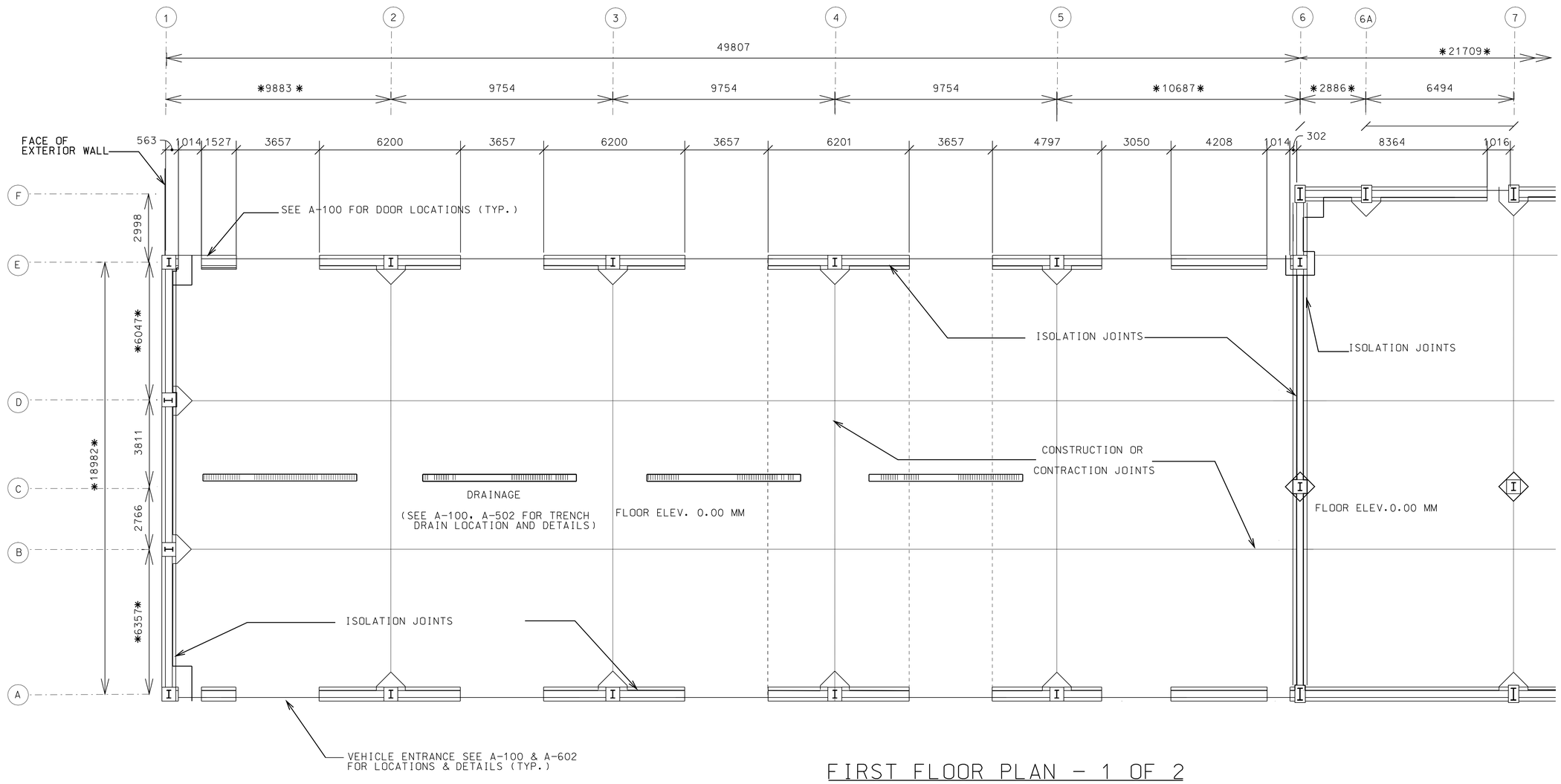

FIRST FLOOR PLAN - 1 OF 2

4000 2000 0 4000 8000
SCALE: 1:200

NOTES:
1. SEE S-101 FOR FOUNDATION PLAN.
2. SEE S-102A FOR SPECIAL NOTE ON DIMENSIONS WITH ASTERISK.

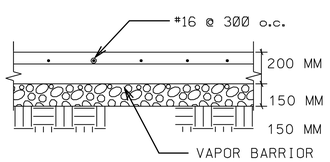

TYPICAL SLAB OTHER AREA

N.T.S.

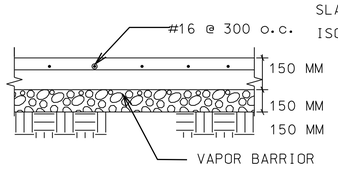

TYPICAL SLAB OFFICE AREA

N.T.S.

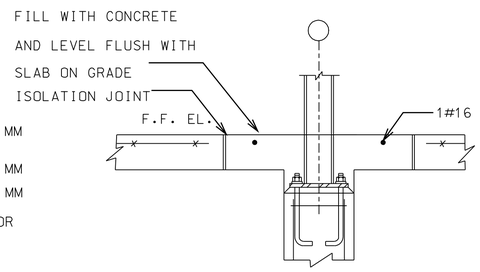

TYPICAL COLUMN ISOLATION JOINT

N.T.S.

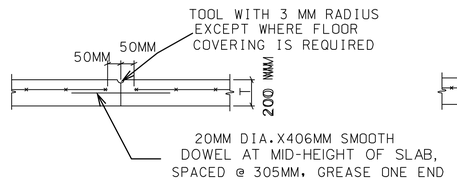

TYPICAL SLAB CONSTRUCTION JOINT

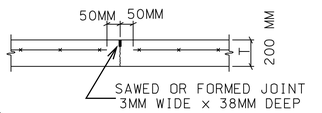

TYPICAL SLAB CONTRACTION JOINT

US Army Corps of Engineers
New York District

REVISION REPLACES ORIGINAL SHEET

Designed by: Date: Scale: As shown
Dwn by: Ckd by: Solicitation no.:
Reviewed by: Contract no.:
Submitted by: File name: S:\Manuel.military\Fort Drum\Fortce\DrawingS\SHEET FILES\ForceMOD57708_S-102XXX.dgn
Plot date: 19-AUG-2005 17:00
Plot by: e3sendsbo
Date: 12/01/1200000

U.S. ARMY ENGINEER DISTRICT
CORPS OF ENGINEERS
NEW YORK, NEW YORK

PN 57708
FORCE MODERNIZATION, EDUCATION / TRANSITIONAL FACILITY
FORT DRUM, NEW YORK

FIRST FLOOR SLAB
1 OF 2

Sheet reference number:
S-102

Plot Date: 19-AUG-2005 17:00
Submitted by: e3sendsbo
S:\fileroom\military\Fort Drum\ForceMOD\Structural\SHEET FILES\ForceMOD57708.S-102XXX.dgn

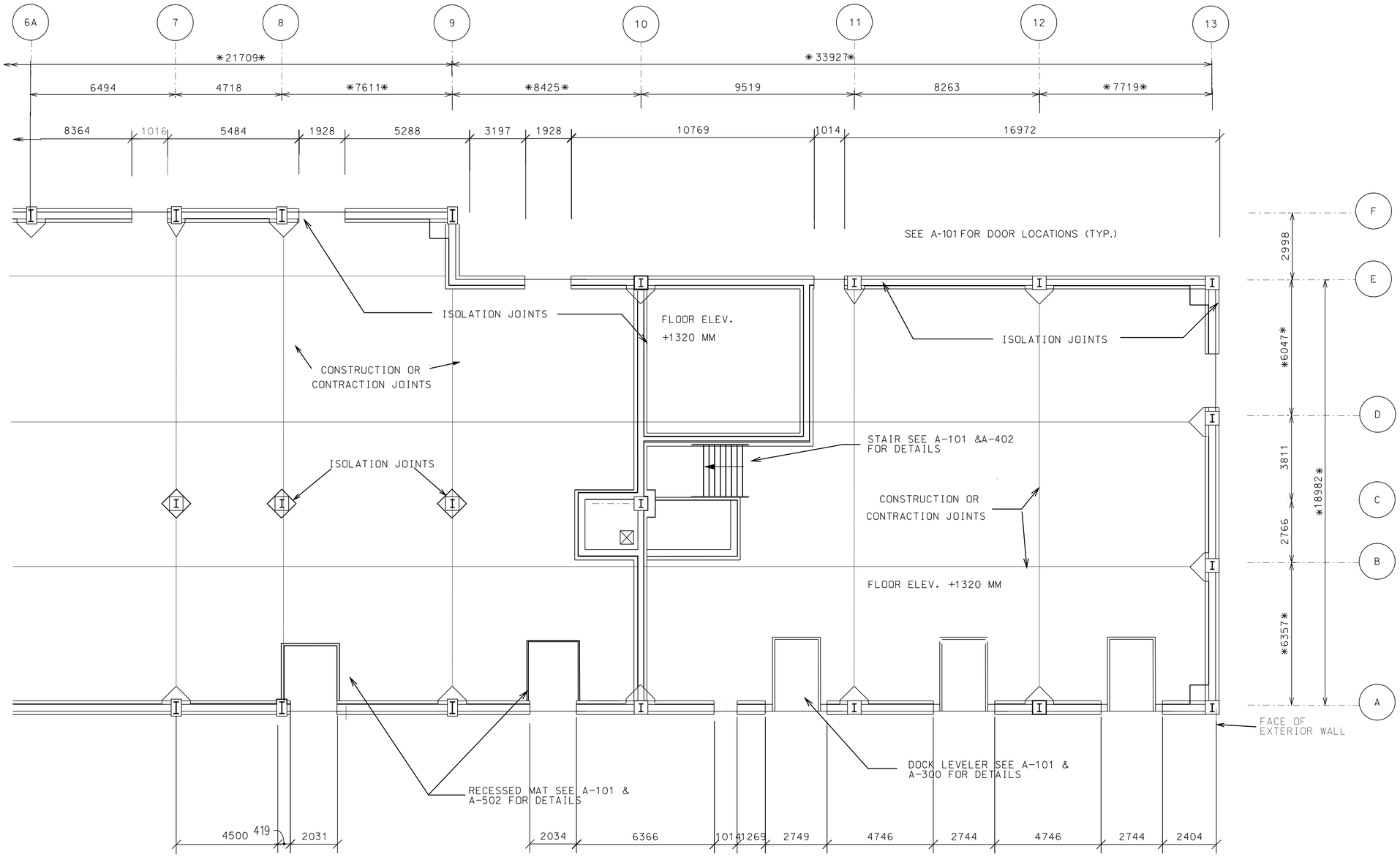

FIRST FLOOR PLAN – 2 OF 2

4000 2000 0 4000 8000

SCALE: 1 : 200

SPECIAL NOTE FOR DIMENSIONS WITH ASTERISK:

CONTRACTOR SHALL VERIFY THOSE DIMENSIONS AND ADJUST THEM AS NECESSARY ACCORDING TO THE FOLLOWING TWO CRITERIA:

1. THE BUILDING ENVELOPE DIMENSIONS AS SHOW ON A-100 & A-101 SHALL REMAIN.
2. THE DISTANCE FROM CENTERLINE OF COLUMN TO FACE OF EXTERIOR WALL IS TO BE DETERMINED PER FINAL PRE-ENGINEERED METAL BUILDING DESIGN.

US Army Corps of Engineers
New York District

Mark	Description	Date	Appr.
1	NEW SUPPLEMENTAL DRAWING FOR S-102	17 AUG 2006	

U.S. ARMY ENGINEER DISTRICT
CORPS OF ENGINEERS
NEW YORK, NEW YORK

Designed by: | Date: | Size: A1
Dwn by: | Ckd by: | Solicitation no.:
Reviewed by: | Contract no.:
Submitted by: | Plot date: 19-AUG-2005 17:00 | File name: S:\filerooms\military\FortDrum\ForceMOD\Structural\SHEET FILES\ForceMOD57708_S-102AXXX.dgn | Plot by: e3endsbo | Scale: 1:200/01:100000

FORCE MODERNIZATION FACILITY
FORT DRUM NEW YORK

FIN 57708
EDI 200000

FIRST FLOOR SLAB
2 OF 2

Sheet reference number:
S–102A

Plot Date: 19-AUG-2005 17:00
Submitted by: e3endsbo
S:\filerooms\military\FortDrum\ForceMOD\Structural\SHEET FILES\ForceMOD57708_S-102AXXX.dgn

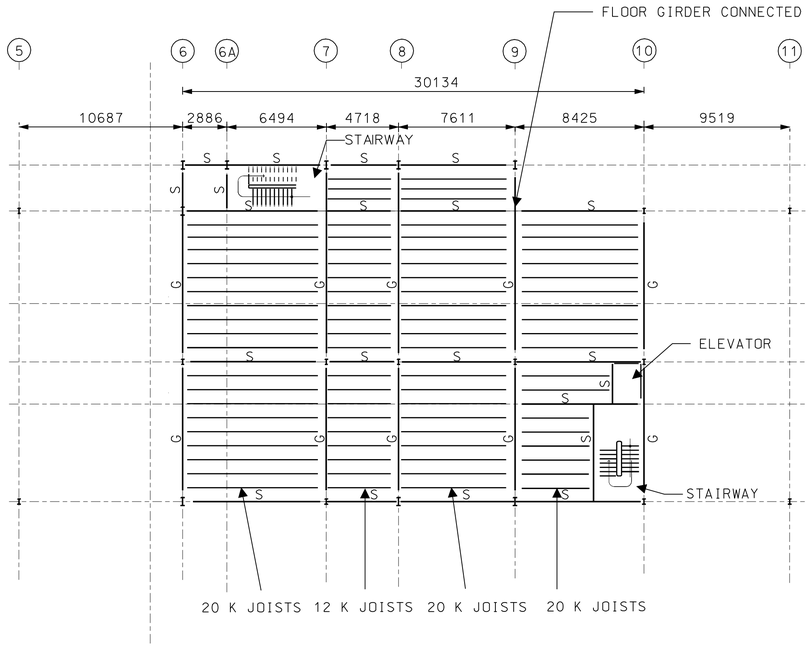

SECOND FLOOR PLAN

4000 2000 0 4000 8000
SCALE: 1 : 200

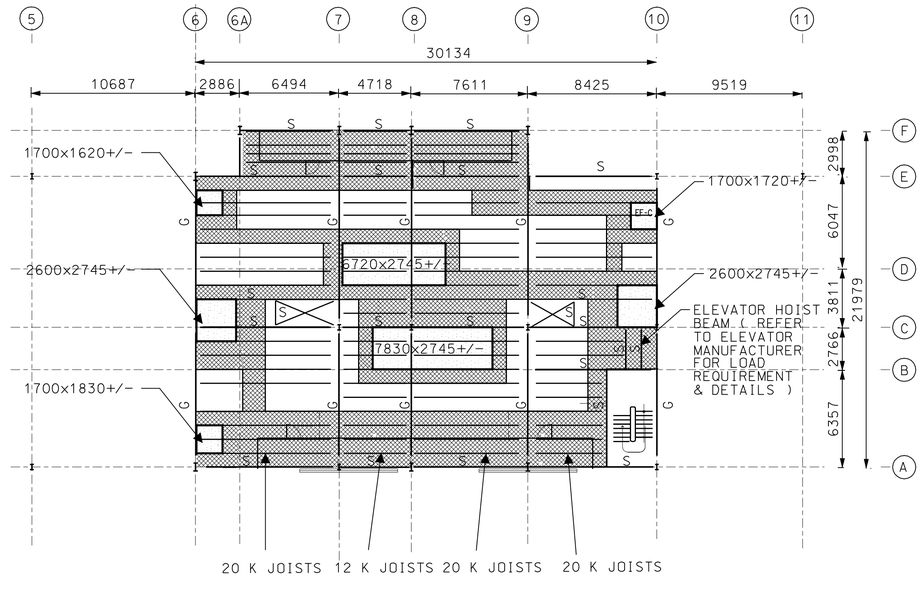

ATTIC FLOOR PLAN

4000 2000 0 4000 8000
SCALE: 1 : 200

LEGEND

G - STEEL GIRDER
S - STEEL STRINGER

CONCRETE METAL DECK

METAL GRATING

NOTES

1. SEE S-001 FOR GENERAL NOTES AND DESIGN REQUIREMENTS FOR METAL BUILDING SYSTEMS
2. TOP OF CONCRETE DECK SLAB ELEVATION:
   2ND FLOOR- EL. 3950MM
   ATTIC FLOOR- EL. 7875MM
3. STEEL DECK SLAB CONSTRUCTION: LIGHT WEIGHT CONCRETE METAL DECK SYSTEM (THICKNESS 100MM) WITH STEEL JOIST (MAXIMUM 510MM). TYPICAL SPACING FOR JOIST IS ABOUT 915MM.
4. REFER TO MECHANICAL, ELECTRICAL DRAWINGS FOR FLOOR PLAN, EQUIPMENT LAYOUT, AND RELATED INFORMATIONS.
5. CARBON STEEL BAR GRATING HAS CROSS BAR 2" C/C AND MIN. BARSIZE 1"X1/8".

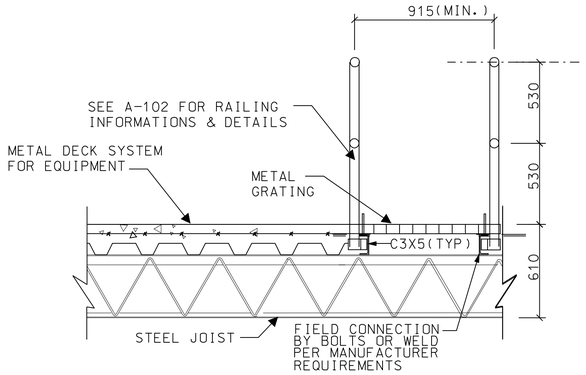

ATTIC GRATING DETAIL

400 200 0 400 800
SCALE: 1 : 20

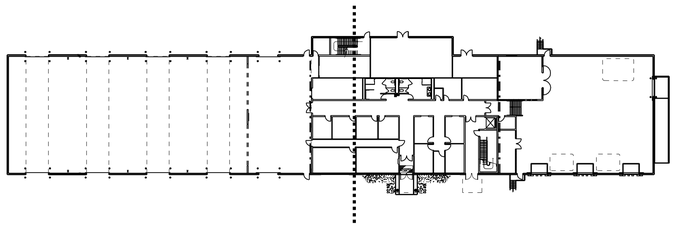

KEY PLAN

10000 5000 0 10000 20000
SCALE: 1 : 500

US Army Corps of Engineers
New York District

REVISION REPLACES ORIGINAL SHEET

Mark	Description	Date	Appr.
1	17 AUG 2005		

Designed by: SOO
Date: 01 DEC 2005
Solicitation no.: DACA51-A-05-0000
Drawn by: SOO
Date: 01 DEC 05
Contract no.: DACA51-A-05-0000
Reviewed by: MD
Date: 01 DEC 05
Submitted by:
Plot date: 19-AUG-2005 17:01
Plot by: e3endsbo
Scale: 1:200/1:20/1:500
File name: S:\Structural\Drawings\Fort Drum\Force\DD\Structural\SHEET FILES\ForceMOD57708_S-FP0001.dgn

U.S. ARMY ENGINEER DISTRICT
CORPS OF ENGINEERS
NEW YORK, NEW YORK

DES. BR. CIVIL ENG. DISS. SEC.
STRUCTURAL TEAM
CENAN-EN-DC-S

PN: 57708
FORCE MODERNIZATION, EDUCATION, /TRANSITIONAL FACILITY
FORT DRUM, NEW YORK

SECOND FLOOR & ATTIC FLOOR PLANS

Sheet reference number:
S-103

Submitted by: e3endsbo
S:\filer\com\military\Fort Drum\Force\MOD\Structural\SHEET FILES\ForceMOD57708_S-FP0001.dgn
Plot Date: 19-AUG-2005 17:01

SHEET FILE: G:\CADD STANDARDS\drawing mac\MORDER_SHEET_2005-S-sBm-A1.dgn

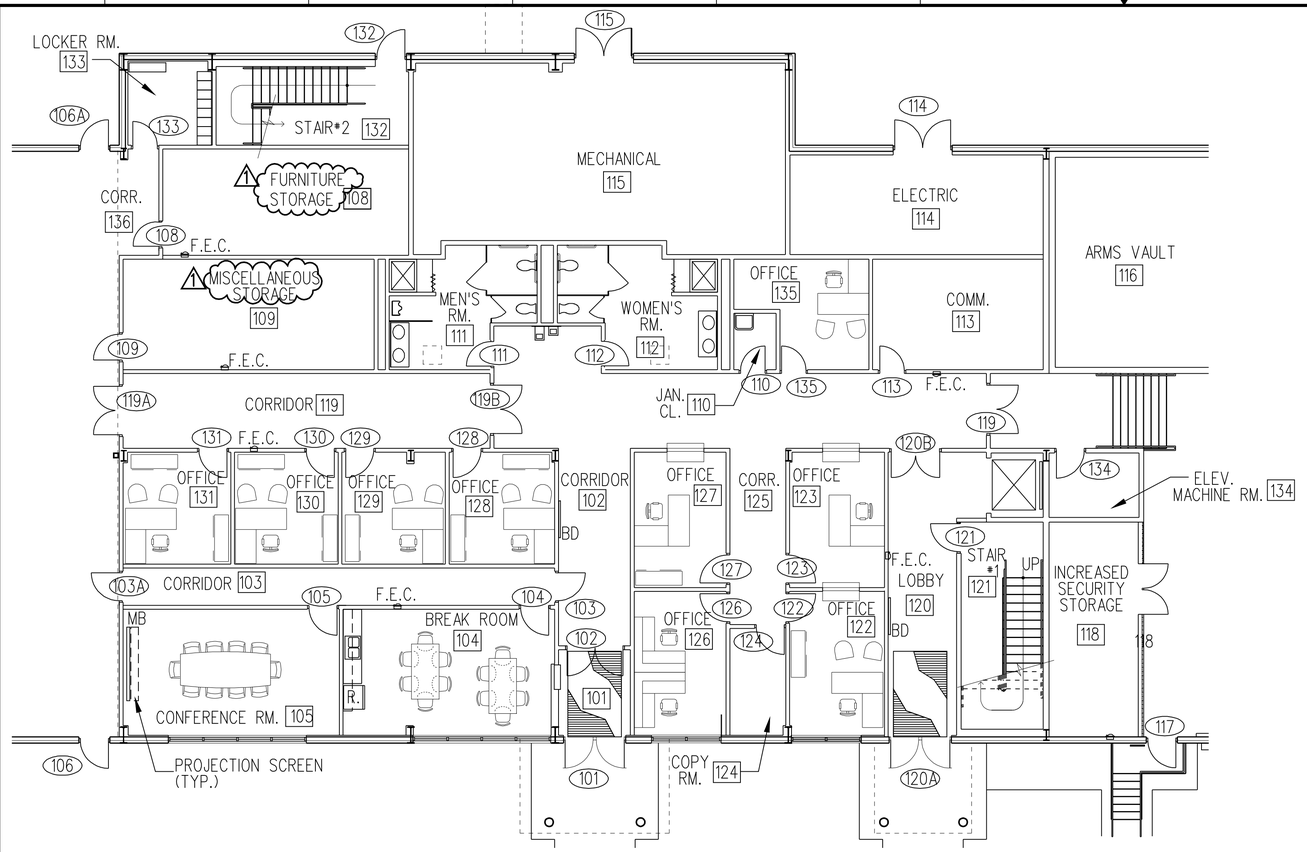

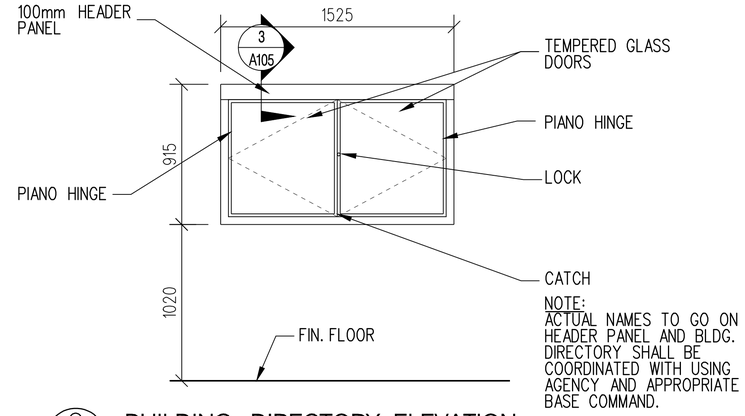

2 A105 A105 BUILDING DIRECTORY ELEVATION
SCALE: 1:20

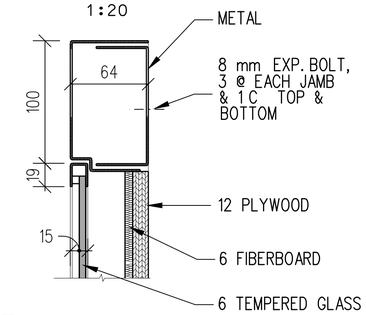

3 A105 A105 BUILDING DIRECTORY DETAIL
SCALE: N.T.S.

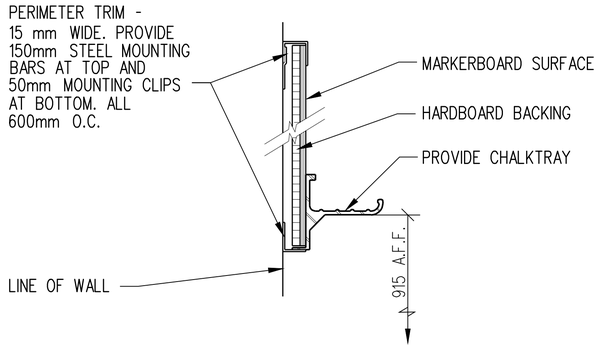

1 A105 A105 MARKERBOARD DETAIL
SCALE: 1:5

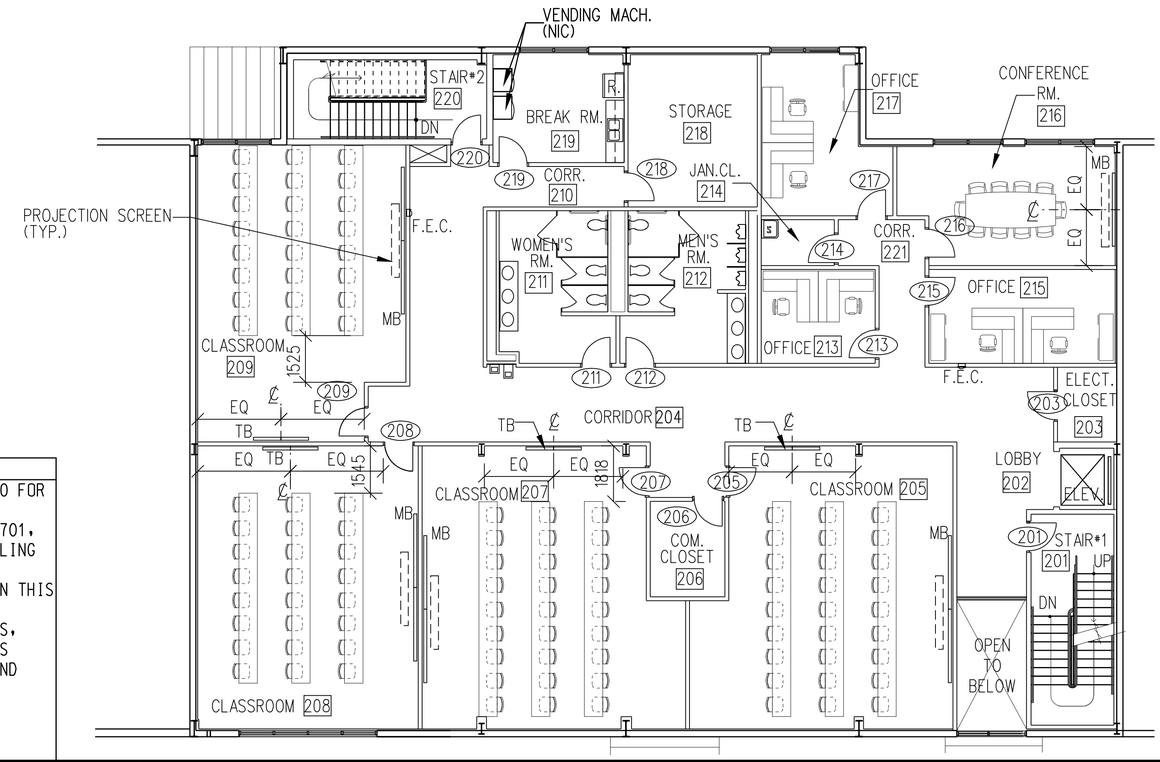

CONFERENCE / CLASSROOM EQUIPMENT				
ROOM NO.	ROOM NAME	EQUIPMENT	QTY.	REMARKS
102	CORRIDOR	BUILDING DIRECTORY (BD)	1	SEE SPEC 10440A
105	CONFERENCE RM.	MARKER BOARD (MB)	1	1525mm L X 1828mm W
		PROJECTION SCREEN	1	REFER TO DWG. A-504
120	LOBBY	BUILDING DIRECTORY (BD)	1	SEE SPEC 10440A
205 207 208 209	CLASSROOMS	MARKER BOARD (MB)	2 EA.	1525mm L X 2400mm W
		PROJECTION SCREEN	1 EA.	REFER TO DWG. A-504
		TACK BOARD (TB)	2 EA.	1525mm L X 914mm W
216	CONFERENCE RM.	MARKER BOARD (MB)	1	1525mm L X 1828mm W
		OVERHEAD PROJ. SCREEN	1	REFER TO DWG. A-504

NOTES

1) REFER TO SPEC. SECTION 10100 FOR FURTHER INFORMATION.
2) REFER TO DRAWINGS A-700, A-701, AND A-702 FOR LOCATIONS OF CEILING RECESSED PROJECTION SCREENS.
3) ALL EQUIPMENT LIST HEREIN ON THIS SCHEDULE SHALL BE PROVIDED BY CONTRACTOR. ALL TABLES, CHAIRS, WORKSTATIONS, AND FILE CABINETS SHOWN ARE FOR REFERENCE ONLY AND ARE NOT IN CONTRACT.
4) CONTRACTOR SHALL PROVIDE ADDITIONAL REINFORCING FOR ALL SURFACE MOUNTED EQUIPMENT.

US Army Corps of Engineers New York District

Mark	Revision Number	Description	Date	Appr.
1	INCREED TOOLKIT NAME		17 AUG 2005	

Designed by: Date: Sheet no.:
Dwn by: Ckd by: Substitution no.:
Reviewed by: Contract no.:
Submitted by: File name: S:\filerooms\military\fort drum\forceMOD\Architectural\forceMOD57T08_A-105xxx.dgn
Plot date: 22-AUG-2005 11:15
Plot by: e3endsjb
Scale: 1:20
Date: 00/00/0000

U.S. ARMY ENGINEER DISTRICT
CORPS OF ENGINEERS
NEW YORK, NEW YORK

PN 57708
FORCE MODERNIZATION EDUCATION /TRANSITIONAL FACILITY
FORT DRUM, NEW YORK

FURNITURE PLAN

Sheet reference number: A–105

Submitted by: e3endsjb
S:\filerooms\military\Fort DrumØForceMODØArchitecturalØforceMOD57T08_A-105xxx.dgn
Plot Date: 22-AUG-2005 11:15

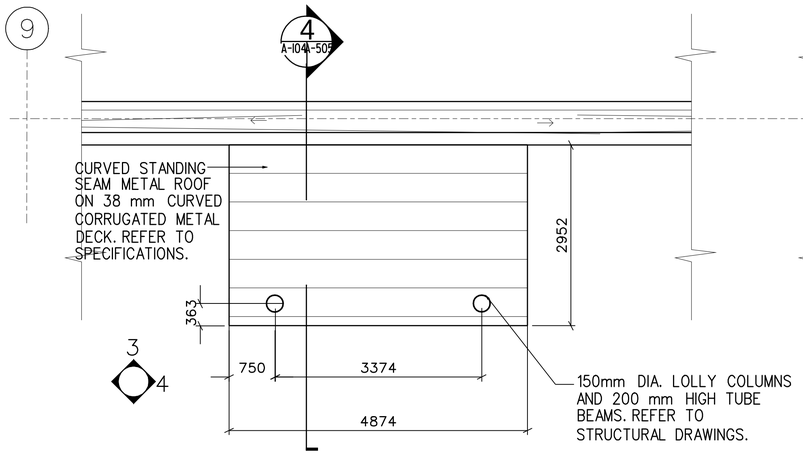

1 CANOPY ROOF PLAN
A104 A505 SCALE: 1:50

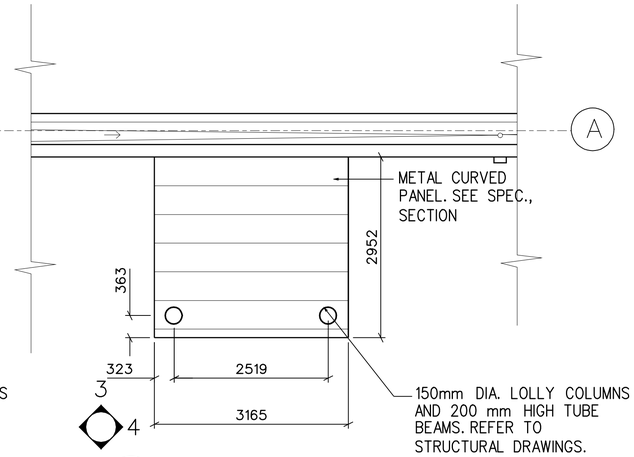

2 CANOPY ROOF PLAN
A104 A505 SCALE: 1:50

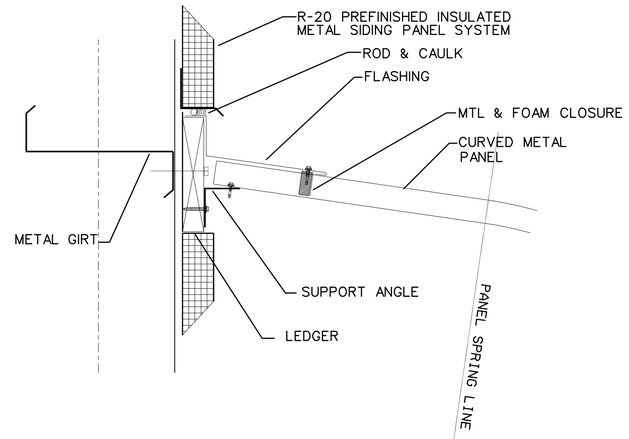

4 PANEL AGAINST GIRT WALL DETAIL
A505 A505 SCALE: 1:10

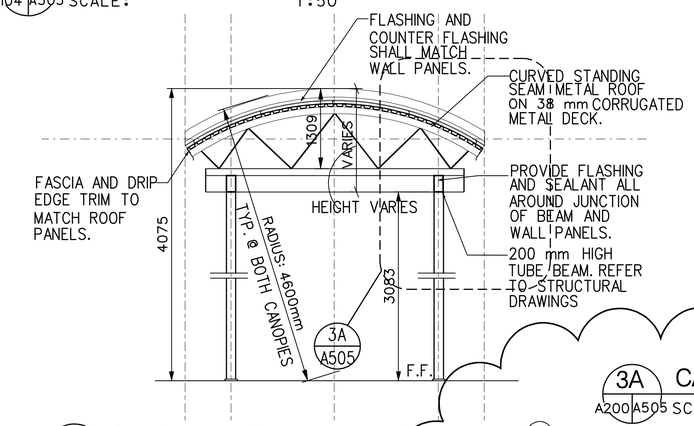

3 CANOPY FRONT ELEVATION
A200 A505 SCALE: 1:50

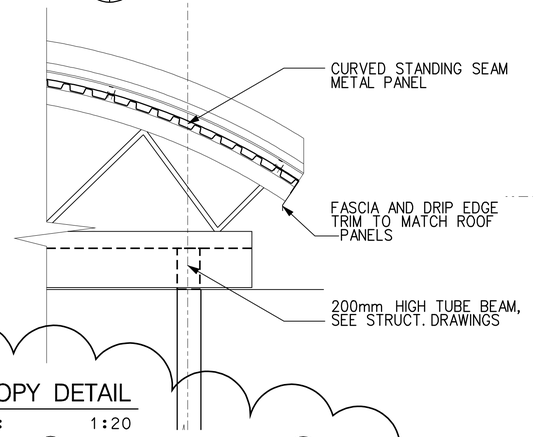

3A CANOPY DETAIL
A200 A505 SCALE: 1:20

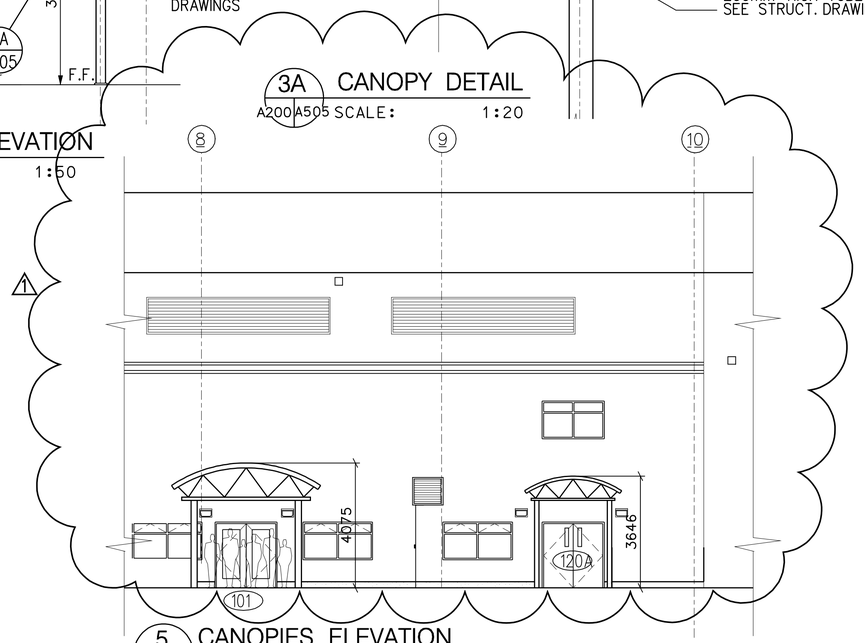

5 CANOPIES ELEVATION
A200 A505 SCALE: 1:100

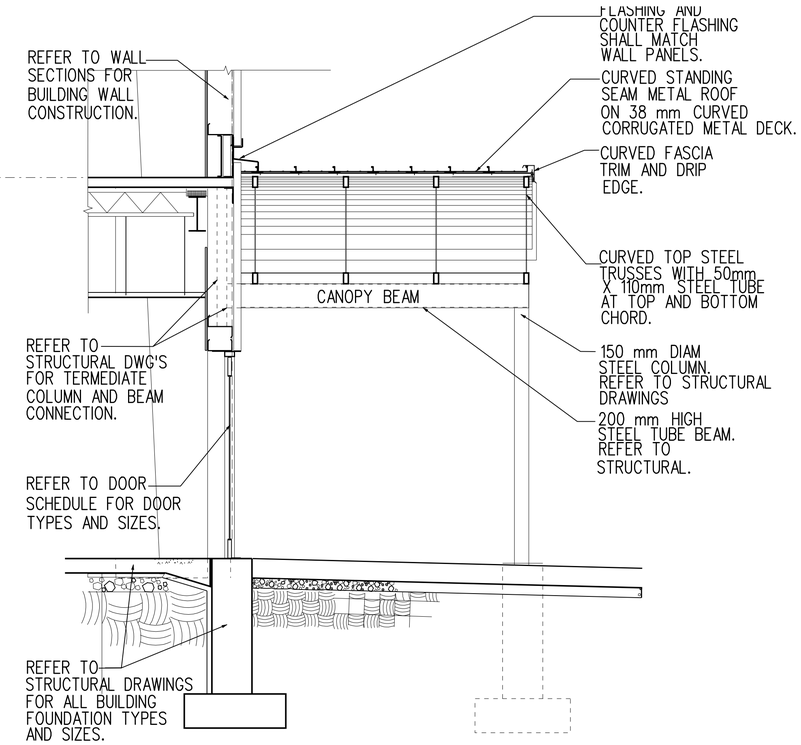

4 SECTION @ CANOPY
A505 A505 SCALE: 1:100

ALL DIMENSIONS ARE SHOWN IN MILLIMETERS

US Army Corps of Engineers
New York District

Mark	Description	Date	Appr.
1	ADDED CANOPY ELEVATION	17 AUG 2005	

Designed by: Date:
Dwn by: Ckd by: Solicitation no.:
Reviewed by: Contract no.:
Submitted by: File date: 22-AUG-2005 11:15 Plot date: Plot by: Scale: 1:200/1:50/1:100

U.S. ARMY ENGINEER DISTRICT
CORPS OF ENGINEERS
NEW YORK, NEW YORK

File name: S:\Manson military\Fort Drum\Force\CD\Architectural\Force\D057708_A-505xxx.dgn

PN 57708
FORCE MODERNIZATION - TRANSITIONAL FACILITY
FOR EDUCATION (TFAE)
FORT DRUM, NEW YORK

ENLARGED CANOPY
SECTION & DETAILS

Sheet reference number:
A–505

Plot Date: 22-AUG-2005 11:15
Submitted by: e3endsjb
S:\filer\oom\military\Fort Drum\ForceMOD\Architectural\ForceMOD57708_A-505xxx.dgn

ROOM FINISH SCHEDULE

ROOM NO.	ROOM	FLOOR MAT.	FLOOR FINISH	FLOOR COLOR	BASE MAT.	BASE FINISH	BASE COLOR	WEST WALL MAT.	WEST WALL FINISH	WEST WALL F.R. (HOUR)	EAST WALL MAT.	EAST WALL FINISH	EAST WALL F.R. (HOUR)	NORTH WALL MAT.	NORTH WALL FINISH	NORTH WALL F.R. (HOUR)	SOUTH WALL MAT.	SOUTH WALL FINISH	SOUTH WALL F.R. (HOUR)	CEILING MAT.	CEILING FINISH	CEILING F.R. (HOUR)	CEILING HEIGHT	REMARKS
FIRST FLOOR																								
101	VESTIBULE	QT	NONSLIP	QT-1 GT-2	QT	NONSLIP	QT-1 GT-2	GWB	PT-1		GWB	PT-1		GWB	PT-1		GWB	PT-1		ACT	ACT-1		2700	NOTES 1,2,5,8
102	CORRIDOR	VCT		VCT-1	RB		RB-2	GWB	PT-1		GWB	PT-1		GWB	PT-1		—	—		ACT	ACT-1		2700	NOTE 1
103	CORRIDOR	VCT		VCT-1	RB		RB-2	GWB	PT-1		GWB	PT-1		GWB	PT-1		GWB	PT-1		ACT	ACT-1		2700	NOTE 1
104	BREAK ROOM	VCT		VCT-1	RB		RB-2	GWB	PT-1		GWB	PT-1		GWB	PT-1		GWB	PT-1		ACT	ACT-1		2700	
105	CONFERENCE ROOM	CPT		CPT-1	RB		RB-1	GWB	PT-2		GWB	PT-2		GWB	PT-2		GWB	PT-2		ACT	ACT-2		2700	
106	VEHICLE CLASSROOM	SEAL CONC.	EPOXY	LIGHT BROWN	—		—	GWB	PT-1		GWB	PT-1		—	—		EXP STR	PT-1		ACT	ACT-2		4900	NOTE 3
106A	VEHICLE CLASSROOM	SEAL CONC.	EPOXY	LIGHT BROWN	—		—	GWB	PT-1		GWB	PT-1		EXP STR	PT-1		—	—		ACT	ACT-2		4900	NOTE 3
107	VEHICLE PROCESSING	SEAL CONC.	EPOXY	LIGHT BROWN	—		—	EXP STR	PT-1		GWB	PT-1		EXP STR	PT-1		EXP STR	PT-1		EXP STR	PT-1		—	NOTE 3
108	FURNITURE STORAGE	SEAL CONC.	EPOXY	LIGHT BROWN	RB		RB-1	GWB	PT-1		GWB	PT-1		GWB	PT-1		GWB	PT-1		EXP STR	PT-1		—	NOTE 3
109	MISCELLANEOUS STORAGE	SEAL CONC.	EPOXY	LIGHT BROWN	RB		RB-1	GWB	PT-1		GWB	PT-1		GWB	PT-1		GWB	PT-1		EXP STR	PT-1		—	NOTE 3
110	JANITOR'S CLOSET	SEAL CONC.	EPOXY	LIGHT BROWN	RB		RB-1	GWB	PT-1		GWB	PT-1		GWB	PT-1		GWB	PT-1		WRGWB	PT-3		2400	NOTE 3
111	MEN'S ROOM	CMT	NONSLIP	CMT-2 GT-1	CMT		CMT-2 GT-1	CT / GWB	CT-1 / PT-8		CT / GWB	CT-1 / PT-8		CT / GWB	CT-1 / PT-8		CT / GWB	CT-1 / PT-8		WRGWB	PT-3		2700	NOTE 5,8
112	WOMEN'S TOILET	CMT	NONSLIP	CMT-1 GT-1	CMT		CMT-1 GT-1	CT / GWB	CT-1 / PT-7		CT / GWB	CT-1 / PT-7		CT / GWB	CT-1 / PT-7		CT / GWB	CT-1 / PT-7		WRGWB	PT-3		2700	NOTE 5,8
113	COMMUNICATION ROOM	VCT		VCT-1	RB		RB-2	GWB	PT-1		GWB	PT-1		GWB	PT-1		GWB	PT-1		ACT	ACT-1		2400	
114	ELECTRIC ROOM	SEAL CONC.	EPOXY	LIGHT BROWN	RB		RB-1	GWB	PT-1	2	GWB	PT-1	2	GWB	PT-1	2	GWB	PT-1	2	EXP STR	PT-1	2	—	NOTE 3
115	MECHANICAL ROOM	SEAL CONC.	EPOXY	LIGHT BROWN	RB		RB-1	GWB	PT-1	2	GWB	PT-1	2	GWB	PT-1	2	GWB	PT-1	2	EXP STR	PT-1	2	—	NOTE 3
116	ARMS VAULT	SEAL CONC.	EPOXY	LIGHT BROWN	—		—	REINF. CONC.	PAINTED CONC.		REINF. CONC.	PAINTED CONC.		REINF. CONC.	PAINTED CONC.		REINF. CONC.	PAINTED CONC.		REINF. CONC.	PAINTED CONC.		3200	NOTE 3
117	WAREHOUSE	SEAL CONC.	EPOXY	LIGHT BROWN	—		—	GWB	PT-1		EXP STR	PT-1		EXP STR	PT-1		EXP STR	PT-1		EXP STR	PT-1		—	NOTE 3
118	INCREASED SECURITY STORAGE	SEAL CONC.	EPOXY	LIGHT BROWN	—		—	GWB	PT-1		WIRE MESH	—		WIRE MESH	—		WIRE MESH	—		WIRE MESH	—		—	NOTE 3
119	CORRIDOR	VCT		VCT-1	RB		RB-2	GWB	PT-1		GWB	PT-1		GWB	PT-1		GWB	PT-1		ACT	ACT-1		2700	NOTE 1
120	LOBBY	QT	NONSLIP	QT-1 GT-2	QT	NONSLIP	QT-1 GT-2	GWB	PT-1		GWB	PT-1		GWB	PT-1		GWB	PT-1		ACT	ACT-1		2700	NOTE 1,2,5,8
121	STAIR #1	VCT		VCT-1	—		—	GWB	PT-1	1	GWB	PT-1	1	GWB	PT-1	1	GWB	PT-1	1	GWB	PT-3	1	—	
122	OFFICE	CPT		CPT-1	RB		RB-1	GWB	PT-2		GWB	PT-2		GWB	PT-2		GWB	PT-2		ACT	ACT-2		2700	
123	OFFICE	CPT		CPT-1	RB		RB-1	GWB	PT-2		GWB	PT-2		GWB	PT-2		GWB	PT-2		ACT	ACT-2		2700	
124	COPY ROOM	VCT		VCT-1	RB		RB-2	GWB	PT-2		GWB	PT-2		GWB	PT-2		GWB	PT-2		ACT	ACT-1		2700	
125	CORRIDOR	VCT		VCT-1	RB		RB-2	GWB	PT-1		GWB	PT-1		—	—		GWB	PT-1		ACT	ACT-1		2700	NOTE 1
126	OFFICE	CPT		CPT-1	RB		RB-1	GWB	PT-2		GWB	PT-2		GWB	PT-2		GWB	PT-2		ACT	ACT-2		2700	
127	OFFICE	CPT		CPT-1	RB		RB-1	GWB	PT-2		GWB	PT-2		GWB	PT-2		GWB	PT-2		ACT	ACT-2		2700	
128	OFFICE	CPT		CPT-1	RB		RB-1	GWB	PT-2		GWB	PT-2		GWB	PT-2		GWB	PT-2		ACT	ACT-2		2700	
129	OFFICE	CPT		CPT-1	RB		RB-1	GWB	PT-2		GWB	PT-2		GWB	PT-2		GWB	PT-2		ACT	ACT-2		2700	
130	OFFICE	CPT		CPT-1	RB		RB-1	GWB	PT-2		GWB	PT-2		GWB	PT-2		GWB	PT-2		ACT	ACT-2		2700	
131	OFFICE	CPT		CPT-1	RB		RB-1	GWB	PT-2		GWB	PT-2		GWB	PT-2		GWB	PT-2		ACT	ACT-2		2700	
132	STAIR #2	VCT		VCT-1	—		—	GWB	PT-1	1	GWB	PT-1	1	GWB	PT-1	1	GWB	PT-1	1	GWB	PT-3	1	—	
133	LOCKERS ROOM	SEAL CONC.	EPOXY	LIGHT BROWN	RB		RB-2	GWB	PT-1		GWB	PT-1		GWB	PT-1		GWB	PT-1		WRGWB	PT-3		2700	
134	ELEV. MACHINE ROOM	SEAL CONC.	EPOXY	LIGHT BROWN	RB		RB-2	GWB	PT-1		GWB	PT-1		GWB	PT-1		GWB	PT-1		EXP STR	PT-1		—	NOTE 3
135	OFFICE	CPT		CPT-1	RB		RB-2	GWB	PT-2		GWB	PT-2		GWB	PT-2		GWB	PT-2		ACT	ACT-2		2700	
136	CORRIDOR	SEAL CONC.	EPOXY	LIGHT BROWN	RB		RB-2	—	—		GWB	PT-1		GWB	PT-1		GWB	PT-1		ACT	ACT-1		2700	NOTE 1
SECOND FLOOR																								
201	STAIR #1	VCT		VCT-1	—		—	GWB	PT-1	1	GWB	PT-1	1	GWB	PT-1	1	GWB	PT-1	1	GWB	PT-3	1	—	
202	LOBBY	VCT		VCT-1	RB		RB-2	GWB	PT-1		GWB	PT-1		—	—		—	—		ACT	ACT-1		2700	NOTE 1
203	ELECT. CLOSET	VCT		VCT-1	RB		RB-2	GWB	PT-1		GWB	PT-1		GWB	PT-1		GWB	PT-1		ACT	ACT-1		2400	
204	CORRIDOR	VCT		VCT-1	RB		RB-2	GWB	PT-1		GWB	PT-1		GWB	PT-1		GWB	PT-1		ACT	ACT-1		2700	NOTE 1
205	CLASSROOM	VCT		VCT-1	RB		RB-2	GWB	PT-1		GWB	PT-1		GWB	PT-1		GWB	PT-1		ACT	ACT-2		2700	
206	COM. CLOSET	VCT		VCT-1	RB		RB-2	GWB	PT-1		GWB	PT-1		GWB	PT-1		GWB	PT-1		ACT	ACT-1		2400	
207	CLASSROOM	VCT		VCT-1	RB		RB-2	GWB	PT-1		GWB	PT-1		GWB	PT-1		GWB	PT-1		ACT	ACT-2		2700	
208	CLASSROOM	VCT		VCT-1	RB		RB-2	GWB	PT-1		GWB	PT-1		GWB	PT-1		GWB	PT-1		ACT	ACT-2		2700	
209	CLASSROOM	VCT		VCT-1	RB		RB-2	GWB	PT-1		GWB	PT-1		GWB	PT-1		GWB	PT-1		ACT	ACT-2		2700	
210	CORRIDOR	VCT		VCT-1	RB		RB-2	GWB	PT-1		GWB	PT-1		GWB	PT-1		GWB	PT-1		ACT	ACT-1		2700	NOTE 1
211	WOMEN'S TOILET	CMT	NONSLIP	CMT-1 GT-1	CMT	NONSLIP	CMT-1 GT-1	CT / GWB	CT-1 / PT-7		CT / GWB	CT-1 / PT-7		CT / GWB	CT-1 / PT-7		CT / GWB	CT-1 / PT-7		WRGWB	PT-3		2700	NOTE 5,8
212	MEN'S TOILET	CMT	NONSLIP	CMT-2 GT-1	CMT	NONSLIP	CMT-2 GT-1	CT / GWB	CT-1 / PT-8		CT / GWB	CT-1 / PT-8		CT / GWB	CT-1 / PT-8		CT / GWB	CT-1 / PT-8		WRGWB	PT-3		2700	NOTE 5,8
213	OFFICE	CPT		CPT-1	RB		RB-1	GWB	PT-2		GWB	PT-2		GWB	PT-2		GWB	PT-2		ACT	ACT-2		2700	
214	JAN. CLOSET	SEAL CONC.	EPOXY	LIGHT BROWN	RB		RB-2	GWB	PT-1		GWB	PT-1		GWB	PT-1		GWB	PT-1		WRGWB	PT-3		2400	NOTE 3
215	OFFICE	CPT		CPT-1	RB		RB-1	GWB	PT-2		GWB	PT-2		GWB	PT-2		GWB	PT-2		ACT	ACT-2		2700	
216	CONFERENCE ROOM	CPT		CPT-1	RB		RB-1	GWB	PT-2		GWB	PT-2		GWB	PT-2		GWB	PT-2		ACT	ACT-2		2700	
217	OFFICE	CPT		CPT-1	RB		RB-1	GWB	PT-2		GWB	PT-2		GWB	PT-2		GWB	PT-2		ACT	ACT-2		2700	
218	STORAGE	VCT		VCT-1	RB		RB-2	GWB	PT-1		GWB	PT-1		GWB	PT-1		GWB	PT-1		EXP STR	PT-1		—	
219	BREAK ROOM	VCT		VCT-1	RB		RB-2	GWB	PT-1		GWB	PT-1		GWB	PT-1		GWB	PT-1		ACT	ACT-1		2700	
220	STAIR # 2	VCT		VCT-1	—		—	GWB	PT-1	1	GWB	PT-1	1	GWB	PT-1	1	GWB	PT-1	1	GWB	PT-3	1	—	
221	CORRIDOR	VCT		VCT-1	RB		RB-2	GWB	PT-1		GWB	PT-1		GWB	PT-1		GWB	PT-1		ACT	ACT-1		2700	NOTE 1
301	STAIR # 1	VCT		VCT-1	—		—	GWB	PT-1	1	GWB	PT-1	1	GWB	PT-1	1	GWB	PT-1	1	GWB	PT-3	1	—	
302	MECHANICAL FAN ROOM	—		—	—		—	EXP STR	PT-1		EXP STR	PT-1		EXP STR	PT-1		EXP STR	PT-1		EXP STR	PT-1		—	

ABBREVIATIONS

GWB	GYPSUM WALL BOARD
ACT	ACOUSTICAL CEILING TILE
EXP STR	EXPOSED STRUCTURE
SEAL CONC.	SEALED CONCRETE
CT	CERAMIC TILE
CMT	CERAMIC MOSAIC TILE
RB	RUBBER BASE
VCT	VINYL COMPOSITION TILE
QT	QUARRY TILE
CPT	CARPET
WRGWB	WATER RESISTANT GYPSUM WALL BOARD
F.R.	FIRE RATED
REINF. CONC.	REINFORCED CONCRETE
PT	PAINT
EM	ENTRY MAT
TP	TOILET PARTITION
GT	GROUT

GENERAL NOTES

1) ABUSE RESISTANT GYPSUM WALLBOARD SHALL BE UTILIZED IN CORRIDORS, VESTIBULES, AND LOBBIES.

2) FOR ENTRY MAT (EM) DETAIL, REFER TO DWG. A-502.

3) FLOOR SHALL RECIEVE NONSLIP FLOOR SEALER.

4) FOR WIRE MESH PARTITION DETAIL, REFER TO DWG.A-503.

5) CERAMIC MOSAIC TILE (CMT) AND QUARRY TILE (QT) FLOORING SHALL HAVE UNGLAZED NON-SLIP FLOOR FINISH.

6) REFER TO SPEC. SECTIONS 09915 AND 09900. (TYPICAL)

7) ALL MANUFACTURER'S COLORS, PATTERNS & TYPE INDICATED ARE FOR REFERENCE PURPOSES ONLY. THE REFERENCES ARE USED TO INDICATE THE INTENDED TYPE, DETAIL, COLOR AND PATTERN. IT IS NOT INTENDED TO LIMIT THE SELECTION OF OTHER MANUFACTURERS PRODUCTS OF SIMILAR TYPE, DETAIL, COLOR & PATTERN. FINAL COLOR SELECTIONS SHALL BE SUBMITTED TO AND APPROVED BY THE FORT DRUM RESIDENT OFFICE.(TYPICAL)

8) GROUT, GT-1, SHALL BE USED IN AREAS WITH CERAMIC TILE AND GROUT, GT-2, SHALL BE USED IN AREAS WITH QUARRY TILE.

MATERIALS LEGEND

FINISH	MANUFACTURER	COLLECTION/MODEL NUMBER	COLOR
VCT-1	ARMSTRONG	EXCELON 51873	FORTRESS WHITE 51839
RB-1	JOHNSONITE	RUBBER WALL BASE	THUNDER #168
RB-2	JOHNSONITE	RUBBER WALL BASE	BUTTERNUT #146
ACT-1	ARMSTRONG	FINE FISSURED 1728M	WHITE (WH)
ACT-2	ARMSTRONG	FINE FISSURED 1821M	WHITE (WH)
QT-1	AMERICAN OLEAN	QUARRY TILE	SMOKED GRAY Q54
CMT-1	AMERICAN OLEAN	UNGLAZED CERAMIC MOSAICS	BEACH TAN A20
CMT-2	AMERICAN OLEAN	UNGLAZED CERAMIC MOSAICS	BUFF GRANITE A52
CT-1	AMERICAN OLEAN	BRIGHT	BRIGHT LINEN 07
GT-1	MAPEI	KERAPROXY	IVORY 39
GT-2	MAPEI	KERAPROXY	SILVER 27
CPT-1	CAMBRIDGE COMMERCIAL	WYNFORD III	NUTSHELL 2802
PT-1	GLIDDEN	OFF-WHITE PALETTE	NORTH STAR 67YY 89/124
PT-2	GLIDDEN	BRIGHT PALETTE	MACADAMIA WHITE 30YY 75/145
PT-3	GLIDDEN	INTERIOR READY-MIX	EGRET 39YY 85/046
PT-4	PRECOAT METALS		SURREY BEIGE 618L448
PT-5	PRECOAT METALS		SEAL BROWN 618D474
PT-6	GLIDDEN	CLEAN PALETTE	SUMMER STRAW 30YY 61/300
PT-7	GLIDDEN	MUTED PALETTE	ALMOST PINK 70RR 83/040
PT-8	GLIDDEN	HISTORICAL PALETTE	LAKE GEORGE 50BG 71/049
PLAM-1	WILSONART	ABSTRACTS	NAVY LEGACY 4651-60 (107HW)
PLAM-2	WILSONART	ABSTRACTS	NEUTRAL GLACE 4143-60 (107HW)
EM-1	C/S GROUP	PEDIGROUP	9322 SLATE
TP-1	BRADLEY	MILLS PARTITIONS	DESERT STONE S406

US Army Corps of Engineers
New York District

U.S. ARMY ENGINEER DISTRICT
CORPS OF ENGINEERS
NEW YORK, NEW YORK

FORCE MODERNIZATION EDUCATION / TRANSITIONAL FACILITY
FORT DRUM, NEW YORK

FINISH SCHEDULE

Sheet reference number: A-600

Submitted by: e3endsjb Plot Date: 22-AUG-2005 11:15
S:\fileroom\military\Fort Drum\ForceMOD\Architectural\ForceMOD57708_A-600xxx.dgn

DOOR SCHEDULE

DOOR								FRAME						HDW	REMARKS
ROOM NAME	DOOR NO.	ELEV.	MATL.	SIZE (mm) W	H	T	FIRE RATED	ELEV.	MAT'L.	HEAD	JAMB	SILL	FIRE RATED	* SET NO.	
VESTIBULE	101	E	ALUM.	2-900	2100	45	—	1	ALUM.	H3	J1	S1	—	11	COMPLY W/UFC-4-010-01. SEE NOTE 1, DWG A-602
CORRIDOR	102	E	ALUM.	2-900	2100	45	—	1	ALUM.	H2	J2	S2	—	11	COMPLY W/UFC-4-010-01. SEE NOTE 1, DWG A-602
CORRIDOR	103	F	H.M.	900	2100	45	—	1	H.M.	H2	J2	S1	—	3	WIRE GLASS IN DOOR
CORRIDOR	103A	F	H.M.	900	2100	45	3/4 HR	1	H.M.	H2	J2	S1	3/4 HR	3	WIRE GLASS IN DOOR
BREAK ROOM	104	F	H.M.	900	2100	45	—	1	H.M.	H2	J2	S2	—	1	WIRE GLASS IN DOOR
CONFERENCE RM	105	A	H.M.	2-900	2100	45	—	2	H.M.	H2	J2	S2	—	2	
VEH. CLASSRM.	106	F	H.M.	3048	3658	45	—	2	H.M.	H3	J1	S1	—	1	WIRE GLASS IN DOOR
VEH. CLASSRM.	106A	F	H.M.	3048	3658	45	—	1	H.M.	H3	J1	S1	—	1	WIRE GLASS IN DOOR
VEH. PROCESS.	107-OH-1	D	STL	3658	4267	45	—	—	STL	H2	J2	S4	—	—	MOTOR OPERATED
VEH. PROCESS.	107-OH-2	D	STL	3658	4267	45	—	—	STL	H2	J2	S4	—	—	MOTOR OPERATED
VEH. PROCESS.	107-OH-3	D	STL	3658	4267	45	—	—	STL	H2	J2	S4	—	—	MOTOR OPERATED
VEH. PROCESS.	107-OH-4	D	STL	3658	4267	45	—	—	STL	H2	J2	S4	—	—	MOTOR OPERATED
VEH. PROCESS.	107-OH-5	D	STL	3658	4267	45	—	—	STL	H2	J2	S4	—	—	MOTOR OPERATED
VEH. PROCESS.	107-OH-6	D	STL	3658	4267	45	—	—	STL	H2	J2	S4	—	—	MOTOR OPERATED
VEH. PROCESS.	107-OH-7	D	STL	3658	4267	45	—	—	STL	H2	J2	S4	—	—	MOTOR OPERATED
VEH. PROCESS.	107-OH-8	D	STL	3658	4267	45	—	—	STL	H2	J2	S4	—	—	MOTOR OPERATED
VEH. PROCESS.	107-OH-9	D	STL	3658	4267	45	—	—	STL	H2	J2	S4	—	—	MOTOR OPERATED
VEH. PROCESS.	107-OH-10	D	STL	3658	4267	45	—	—	STL	H2	J2	S4	—	—	MOTOR OPERATED
VEH. PROCESS.	107	F	H.M.	900	2100	45	—	1	H.M.	H3	J1	S2	—	1	WIRE GLASS IN DOOR
VEH. PROCESS.	107A	F	H.M.	900	2100	45	—	1	H.M.	H3	J1	S2	—	1	WIRE GLASS IN DOOR
FURNITURE STOR	108	A	H.M.	900	2100	45	—	1	H.M.	H2	J2	S1	—	6	
MISCEL. ROOM	109	A	H.M.	900	2100	45	3/4 HR	1	H.M.	H2	J2	S1	3/4 HR	6	
JANITOR CLOSET	110	A	H.M.	900	2100	45	—	1	H.M.	H2	J2	S1	—	6	
MEN'S ROOM	111	A	H.M.	900	2100	45	—	1	H.M.	H2	J2	S3	—	7	25 mm UNDERCUT
WOMEN'S ROOM	112	A	H.M.	900	2100	45	—	1	H.M.	H2	J2	S3	—	7	25 mm UNDERCUT
COMM. ROOM	113	A	H.M.	900	2100	45	—	1	H.M.	H2	J2	S1	—	6	25 mm UNDERCUT
ELECTRICAL RM.	114	B	H.M.	2-900	2100	45	1 1/2 HR	2	H.M.	H3	J1	S2	1 1/2 HR	2	
MECHANICAL RM.	115	B	H.M.	2-900	2100	45	1 1/2 HR	2	H.M.	H3	J1	S2	1 1/2 HR	2	
ARMS VAULT	116	-	H.M.	2-1200	3000	45	—	2	H.M.	—	—	—	—	6	SEE DWG. A-603 & SPEC. SECTION 11020 GSA APPROVED CLASS 5 ARMS DOOR
WAREHOUSE	117	F	H.M.	900	2100	45	—	1	H.M.	H3	J1	S2	—	1	WIRE GLASS IN DOOR
WAREHOUSE	117A	F	H.M.	900	2100	45	—	1	H.M.	H3	J1	S2	—	1	WIRE GLASS IN DOOR
WAREHOUSE	OH-11	D	STL	2700	2700	45	—	-	STL	H2	J2	S4	—	—	MOTOR OPERATED- OVERHEAD DOOR
WAREHOUSE	OH-12	D	STL	2700	2700	45	—	-	STL	H2	J2	S4	—	—	MOTOR OPERATED- OVERHEAD DOOR
WAREHOUSE	OH-13	D	STL	2700	3658	45	—	-	STL	H2	J2	S4	—	—	MOTOR OPERATED- OVERHEAD DOOR
WAREHOUSE	OH-14	D	STL	2700	3658	45	—	-	STL	H2	J2	S4	—	—	MOTOR OPERATED- OVERHEAD DOOR
CORRIDOR	119	C	H.M.	2-900	2100	45	3/4 HR	2	H.M.	H2	J2	S1	3/4 HR	4	WIRE GLASS IN DOOR
CORRIDOR	119A	C	H.M.	2-900	2100	45	3/4 HR	2	H.M.	H2	J2	S1	3/4 HR	4	WIRE GLASS IN DOOR
CORRIDOR	119B	C	H.M.	2-900	2100	45	—	2	H.M.	H2	J2	S1	—	4	WIRE GLASS IN DOOR
ENTRY DOOR	120A	E	ALUM.	2-900	2100	45	—	2	ALUM.	H3	J1	S1	—	11	COMPLY W/UFC-4-010-01. SEE NOTE 1, DWG A-602
LOBBY	120B	C	H.M.	2-900	2100	45	—	2	H.M.	H2	J2	S1	—	10	WIRE GLASS IN DOOR
STAIR * 1	121	F	H.M.	2-900	2100	45	1 HR	1	H.M.	H1	J3	S1	1 HR	5	WIRE GLASS IN DOOR
OFFICE	122	F	H.M.	900	2100	45	—	1	H.M.	H2	J2	S1	—	2	VISION PANEL (C FIRE RATING)
OFFICE	123	F	H.M.	900	2100	45	—	1	H.M.	H2	J2	S1	—	2	VISION PANEL (C FIRE RATING)
COPY ROOM	124	F	H.M.	900	2100	45	—	1	H.M.	H2	J2	S1	—	3	
OFFICE	126	F	H.M.	900	2100	45	—	1	H.M.	H2	J2	S1	—	2	VISION PANEL (C FIRE RATING)
OFFICE	127	F	H.M.	900	2100	45	—	1	H.M.	H2	J2	S1	—	2	VISION PANEL (C FIRE RATING)
OFFICE	128	F	H.M.	900	2100	45	—	1	H.M.	H2	J2	S1	—	2	VISION PANEL (C FIRE RATING)
OFFICE	129	F	H.M.	900	2100	45	—	1	H.M.	H2	J2	S1	—	2	VISION PANEL (C FIRE RATING)
OFFICE	130	F	H.M.	900	2100	45	—	1	H.M.	H2	J2	S1	—	2	VISION PANEL (C FIRE RATING)
OFFICE	131	F	H.M.	900	2100	45	—	1	H.M.	H2	J2	S1	—	2	VISION PANEL (C FIRE RATING)
STAIR * 2	132	F	H.M.	900	2100	45	1 HR	1	H.M.	H3	J1	S1	1 HR	5	WIRE GLASS IN DOOR
LOCKER ROOM	133	A	H.M.	900	2100	45	—	1	H.M.	H2	J2	S1	—	7	

LOUVER SCHEDULE

LOUVER NO	SIZE WIDTH	HEIGHT	THICKNESS	MATERIAL	TYPE	DETAILS HEAD	JAMB	SILL	REMARKS
LV-1	6000	1200	100	ALUMINUM	FIXED	SEE DETAIL 3, ON DWG. A-602			
LV-2	16600	1200	100	ALUMINUM	FIXED				
LV-3	700	700	100	ALUMINUM	FIXED				
LV-4	1000	900	100	ALUMINUM	FIXED				
LV-5	2400	1200	100	ALUMINUM	FIXED	PROVIDE PREFIN. INSUL. METAL PANEL BEHIND INACTIVE LOUVER AS PER MECHANICAL REQUIREMENT (TYP)			
LV-6	500	500	100	ALUMINUM	FIXED				
LV-7	1000	400	100	ALUMINUM	FIXED				

(*) SEE SPECIFICATION SECTION 08710 FOR DOOR HARDWARE REQUIREMENTS

1. LOUVER DETAILS AND INSTALLATION PER MANUFACTURERS STANDARDS.
2. PAINT LOUVERS AND FRAMING TO MATCH ADJACENT FINISHED SURFACE COLOR OF WALL, ETC.

GLASS TYPES

- G1 - INSULATED, TINTED-TEMPERED, LAMINATED
- G2 - INSULATED TINTED- LAMINATED
- G3 - INSULATED, TINTED
- G4 - WIRE GLASS
- G5 - CLEAR INSULATED

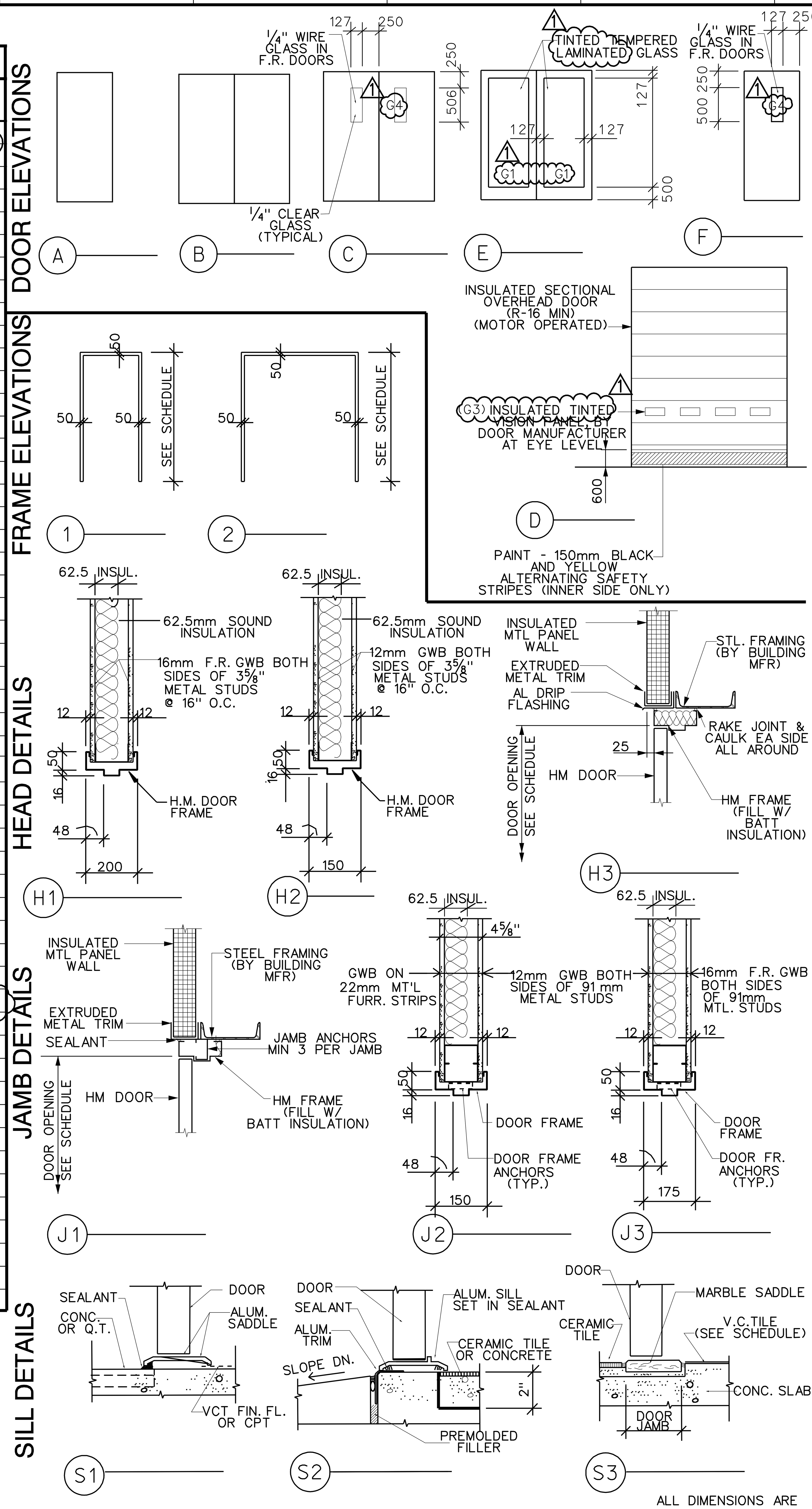

ALL DIMENSIONS ARE SHOWN IN MILLIMETERS

US Army Corps of Engineers New York District

U.S. ARMY ENGINEER DISTRICT CORPS OF ENGINEERS NEW YORK, NEW YORK

FORCE MODERNIZATION EDUCATION / TRANSITIONAL FACILITY FORT DRUM, NEW YORK

DOOR & LOUVER SCHEDULE AND DETAILS

Sheet reference number: A-601

Submitted by: e3endsjb Plot Date: 22-AUG-2005 11:15
S:øfileroomømilitaryøFort DrumøForceMODøArchitecturaløForceMOD57708_A-601xxx.dgn

DOOR SCHEDULE

DOOR								FRAME						HDW	REMARKS
ROOM NAME	DOOR NO.	ELEV.	MATL.	SIZE (mm) W	H	T	FIRE RATED	ELEV.	MAT'L.	HEAD	JAMB	SILL	FIRE RATED	(*) SET NO.	
ELEVATOR MACHINE RM.	134	A	H.M.	900	2100	45	3/4 HR	1	H.M.	H2	J2	S1	3/4 HR	6	
OFFICE	135	A	H.M.	900	2100	45	—	1	H.M.	H2	J2	S1	-	2	
STAIR # 1	201	F	H.M.	2-900	2100	45	1 HR	1	H.M.	H1	J3	S1	1 HR	5	WIRE GLASS IN DOOR
ELECTRICAL CLOSET	203	A	H.M.	2-900	2100	45	—			H2	J2	S1	-	6	LOUVER
CLASSROOM	205	F	H.M.	900	2100	45	—					S1	-	2	VISION PANEL (C FIRE RATING)
COMM. CLOSET	206	A	H.M.	900	2100	45	—					S1	-	6	25 mm UNDERCUT 1
CLASSROOM	207	F	H.M.	900	2100	45	—					S1	-	2	VISION PANEL (C FIRE RATING)
CLASSROOM	208	F	H.M.	900	2100	45	—					S2	-	2	VISION PANEL (C FIRE RATING)
CLASSROOM	209	F	H.M.	900	2100	45	—					S1	-	2	VISION PANEL (C FIRE RATING)
WOMEN'S TOILET	211	A	H.M.	900	2100	45	—					S1	-	3	25 mm UNDERCUT 1
MEN'S ROOM	212	A	H.M.	900	2100	45	—					S1	-	3	25 mm UNDERCUT
OFFICE	213	F	H.M.	900	2100	45	—					S1	-	2	VISION PANEL (C FIRE RATING)
JANITOR CLOSET	214	A	H.M.	900	2100	45	—					S1	-	3	
OFFICE	215	F	H.M.	900	2100	45	—					S1	-	2	VISION PANEL (C FIRE RATING)
CONFERENCE ROOM	216	F	H.M.	900	2100	45	—					S1	-	2	VISION PANEL (C FIRE RATING)
OFFICE	217	A	H.M.	900	2100	45	—					S1	-	2	VISION PANEL (C FIRE RATING)
STORAGE	218	A	H.M.	2-900	2100	45	—					S1	-	6	
BREAK ROOM	219	F	H.M.	2-900	2100	45	—					S1	-	1	
STAIR # 2	220	F	H.M.	2-900	2100	45	1 HR			H1	J3	S1	1 HR	5	WIRE GLASS IN DOOR
STAIR # 1	301	F	H.M.	900	2100	45	1 HR	1	H.M.	H1	J3	S1	1 HR	5	WIRE GLASS IN DOOR
ATTIC (SERVICE DOOR)	302	-	STL.	915	2185		1 HR	HM	-	-	-	-	1 HR	6	MECHANICAL SERVICE DOOR

(*)1. SEE SPECIFICATION SECTION 08710 FOR DOOR HARDWARE REQUIREMENTS

SEE NOTE 1

6 mm NOMINAL LAMINATED GLASS, CONSISTS OF 2 NOMINAL 3 mm GLASS PANES BONDED TOGETHER W/A MIN. OF A 75mm POLYVINYL-BUTYRAL (PVB) INTERLAYER PROTECTED W/WINDOW FILM "STERLING 40"

WINDOW SCHEDULE

WINDOW TYPE	OPENING SIZE WIDTH	HEIGHT	FRAME MATERIAL	GLAZING	REMARKS
1	4500	1235	ALUMINUM	LAMINATED	COMPLY W/UFC-4-010-01. SEE NOTE 1.
2	2276	1235	ALUMINUM	LAMINATED	COMPLY W/UFC-4-010-01. SEE NOTE 1.
3	900	1235	ALUMINUM	DOUBLE GLAZED	SEE SPECIFICATION, FOR SERVICE & INFORMATION WINDOW

GLASS TYPES 1

G1 - INSULATED, TINTED-TEMPERED, LAMINATED
G2 - INSULATED TINTED- LAMINATED
G3 - INSULATED, TINTED
G4 - WIRE GLASS
G5 - CLEAR INSULATED

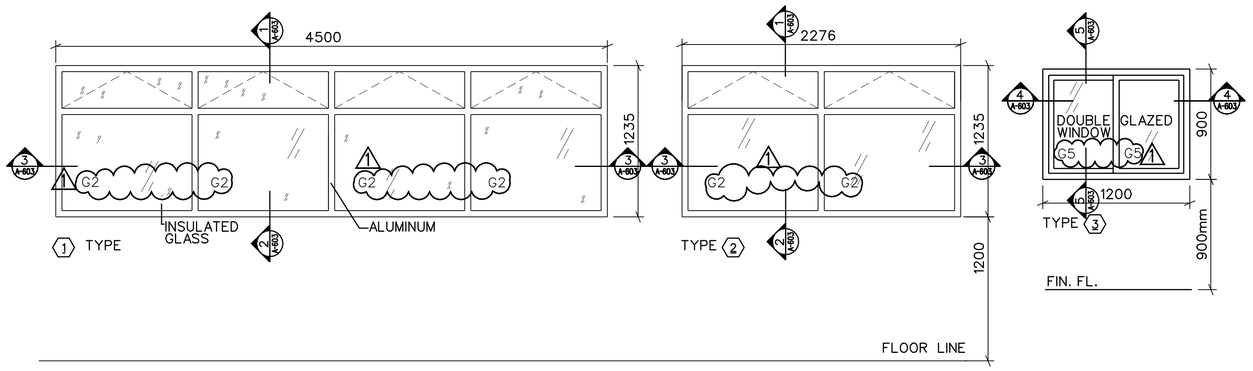

2 WINDOW TYPES
A101 A602 SCALE: 1:25

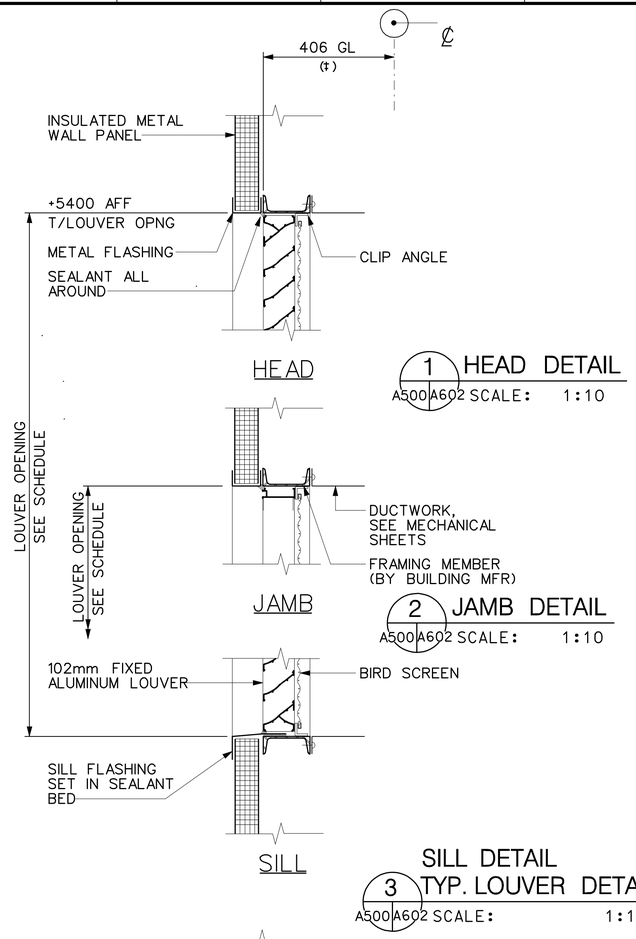

1 HEAD DETAIL
A500 A602 SCALE: 1:10

2 JAMB DETAIL
A500 A602 SCALE: 1:10

3 SILL DETAIL TYP. LOUVER DETAILS
A500 A602 SCALE: 1:10

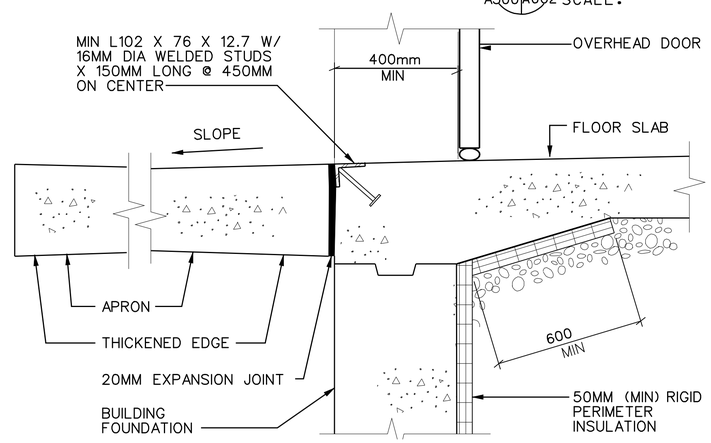

S4 SILL DETAIL AT OVERHEAD VEHICLE DOORS
A601 A602 SCALE: 1:10

ALL DIMENSIONS ARE SHOWN IN MILLIMETERS

US Army Corps of Engineers New York District

U.S. ARMY ENGINEER DISTRICT CORPS OF ENGINEERS NEW YORK, NEW YORK

FORCE MODERNIZATION EDUCATION CENTER, TRANSITIONAL FACILITY FORT DRUM, NEW YORK

DOOR & WINDOW SCHEDULE & DETAILS

Sheet reference number: A-602

Plot Date: 22-AUG-2005 11:15
Submitted by: e3endsjb
s:\fileroom\military\Fort Drum\ForceMOD\Architectural\ForceMOD57708.A-602xxx.dgn

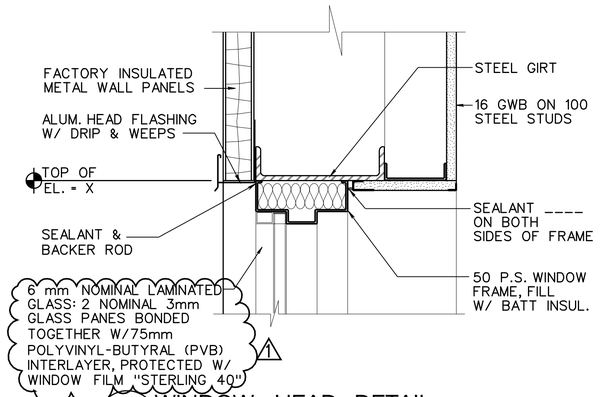

1 WINDOW HEAD DETAIL

A602 A603 SCALE: 1:5

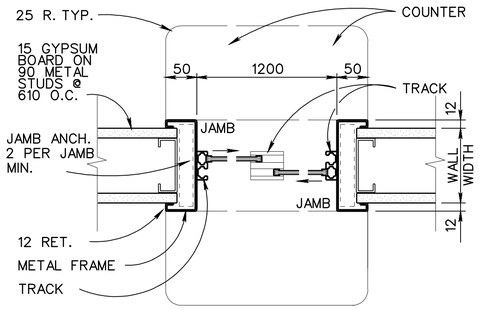

4 SERVICE WINDOW SECTION

A602 A603 SCALE: 1:5

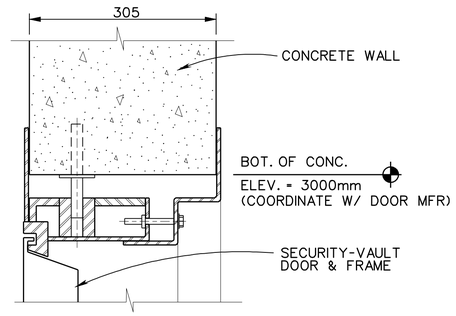

7 ARMS VAULT DOOR HEAD

A603 A603 SCALE: 1:5

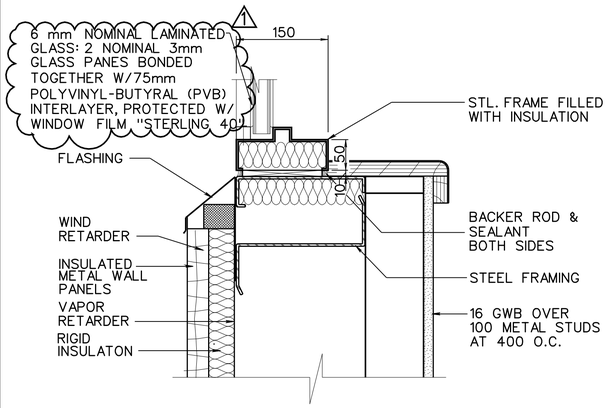

2 WINDOW SILL DETAIL

A602 A603 SCALE: 1:5

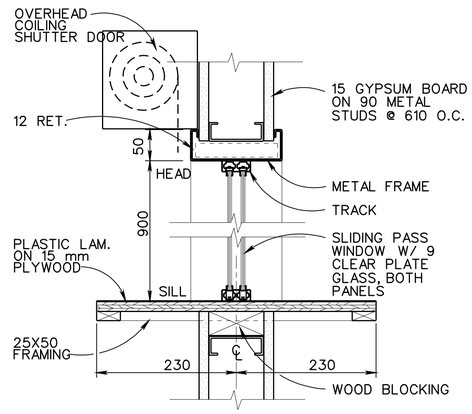

5 SERVICE WINDOW SILL

A602 A603 SCALE: 1:5

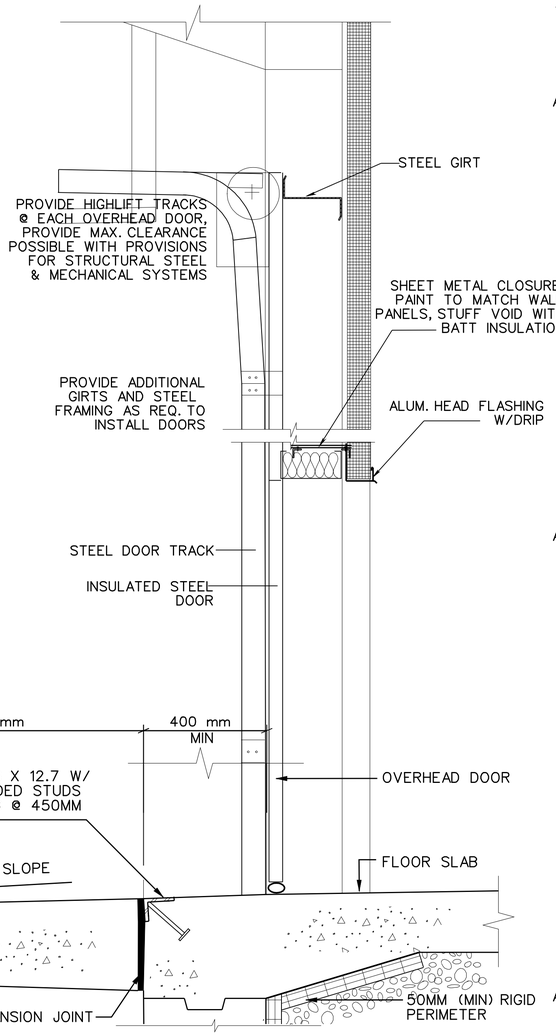

6 O.H. DOOR HEAD

A601 A603 SCALE: N.T.S.

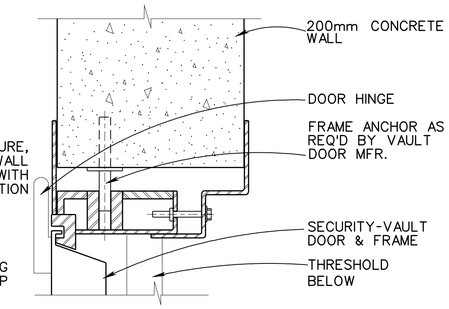

8 ARMS VAULT DOOR JAMB

A603 A603 SCALE: 1:5

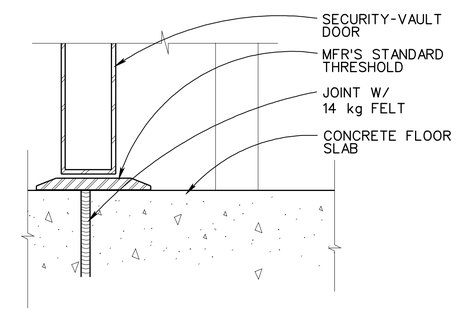

9 ARMS VAULT DOOR SILL

A603 A603 SCALE: 1:5

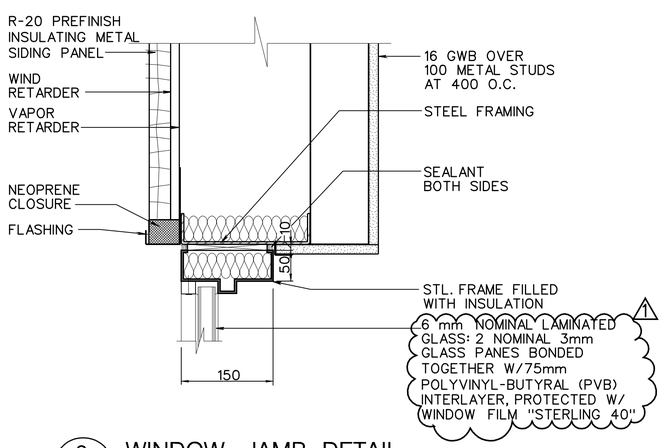

3 WINDOW JAMB DETAIL

A602 A603 SCALE: 1:5

ALL DIMENSIONS ARE SHOWN IN MILLIMETERS

US Army Corps of Engineers
New York District

Mark	Description	Date	Appr.
1	REVISED ADDEND		

U.S. ARMY ENGINEER DISTRICT
CORPS OF ENGINEERS
NEW YORK, NEW YORK

Designed by: | Date: | Date:
Dwn by: | Ckd by: | Solicitation no.:
Reviewed by: | Contract no.:
Submitted by: | File date: 22-AUG-2005 11:15 | Plot date: 22-AUG-2005 11:15 | Plot scale: 1 | Plot date: 12/00/00 00:00

File name: S:\filer-room\military\fort Drum\ForceMOD\Architectural\Floor\DOOR & WINDOW DETAILS.dgn

PN 57708
FORCE MODERNIZATION EDUCATION (TRANSITIONAL FACILITY)
FORT DRUM, NEW YORK

DOOR & WINDOW DETAILS

Sheet reference number:
A–603

Submitted by: e3endsjb
S:\filer-room\military\Fort Drum\ForceMOD\Architectural\Floor\DOOR & WINDOW DETAILS.dgn
Plot Date: 22-AUG-2005 11:15

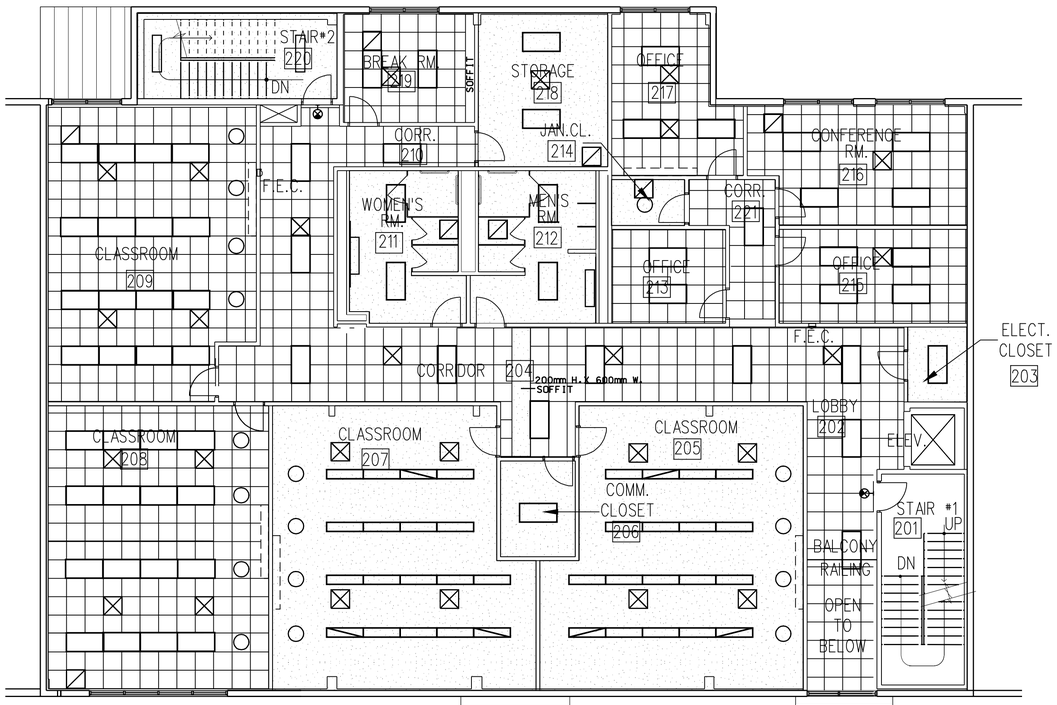

1 A702 SECOND FLOOR PLAN–REFLECTED CEILING
SCALE 1:100

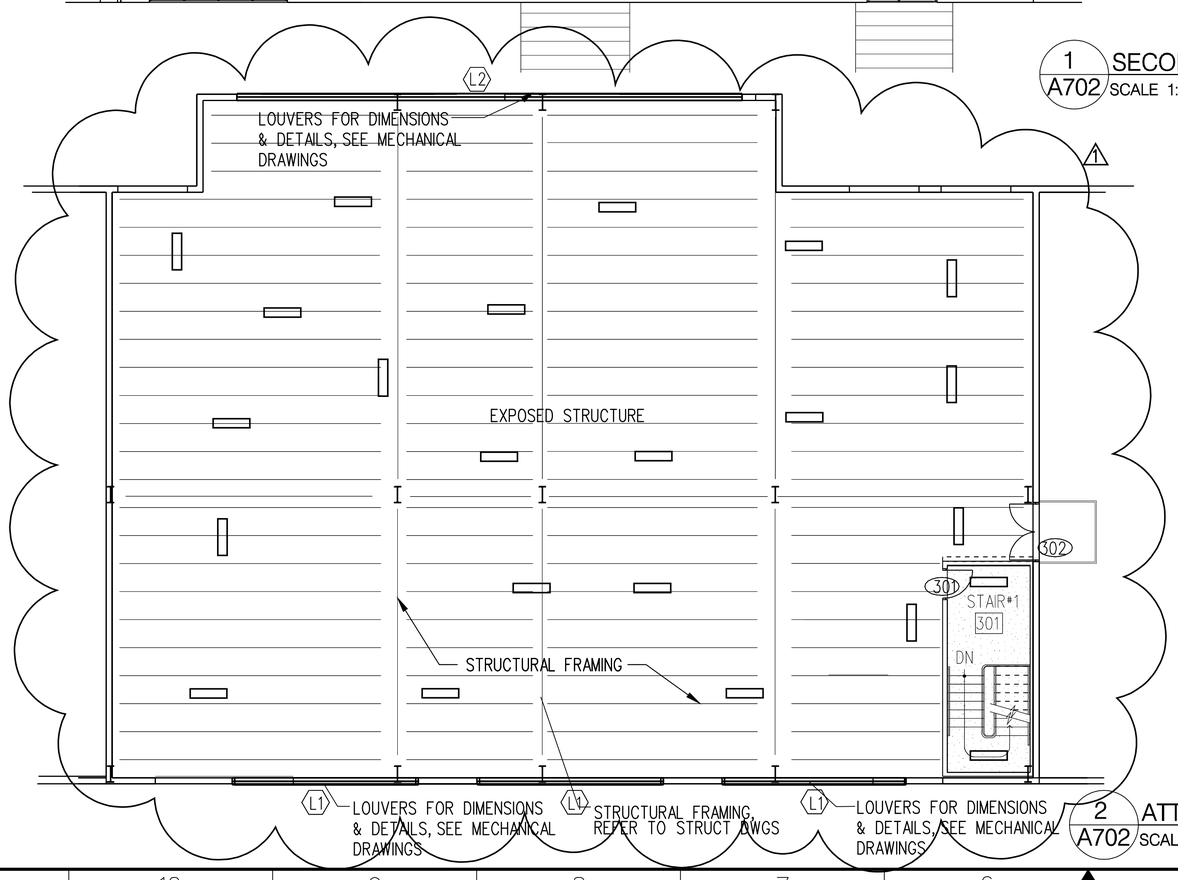

2 A702 ATTIC REFLECTED CEILING PLAN
SCALE 1:100

LEGEND

- 600x1200 FLUORESCENT LIGHT FIXTURE
- 300x1200 INDUSTRIAL FLUORESCENT LIGHT FIXTURE
- 300x1200 SUSPENDED LIGHT FIXTURES
- WALL MOUNTED EXTERIOR LIGHT FIXTURE
- RECESSED DOWNLIGHT
- ILLUMINATED EXIT SIGN
- CEILING RECESSED PROJECTION SCREEN
- 600x600 ACOUSTICAL CEILING TILE
- GYPSUM WALLBOARD CEILING
- SUPPLY, SEE MECHANICAL DRAWINGS
- RETURN, SEE MECHANICAL DRAWINGS

GENERAL NOTES

1. REFER TO ELECTRICAL DRAWINGS FOR LIGHTING INFORMATION.

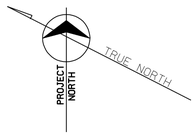

0 2000 4000 10000
SCALE: 1:100

ALL DIMENSIONS ARE IN MILLIMETERS

US Army Corps of Engineers
New York District

Mark	Description	Date	Appr.
2	REVISED ATTIC REFLECTED CEILING PLAN	17 AUG 2005	

U.S. ARMY ENGINEER DISTRICT
CORPS OF ENGINEERS
NEW YORK, NEW YORK

Designed by:
Dwn by: Ckd by:
Reviewed by:
Submitted by:
Date:
Solicitation no.:
Contract no.:
Plot date: 22-AUG-2005 11:15
Plot by: e3endsjb
Scale: 1:00000/1:00000
File name: S:\Mission Hilltop\For Drum\FormMOD\Architectural\FormMOD57708_A-702xxx.dgn

FORCE MODERNIZATION EDUCATION (TRANSITIONAL FACILITY FOR DRUM) FORT DRUM, NEW YORK
PN 57708

SECOND FLOOR PLAN REFLECTED CEILING

Size: 24 x 36
Sheet reference number:
A–702

Submitted by: e3endsjb
S:\fileroom\military\Fort Drum\FormMOD\Architectural\FormMOD57708_A-702xxx.dgn
Plot Date: 22-AUG-2005 11:15

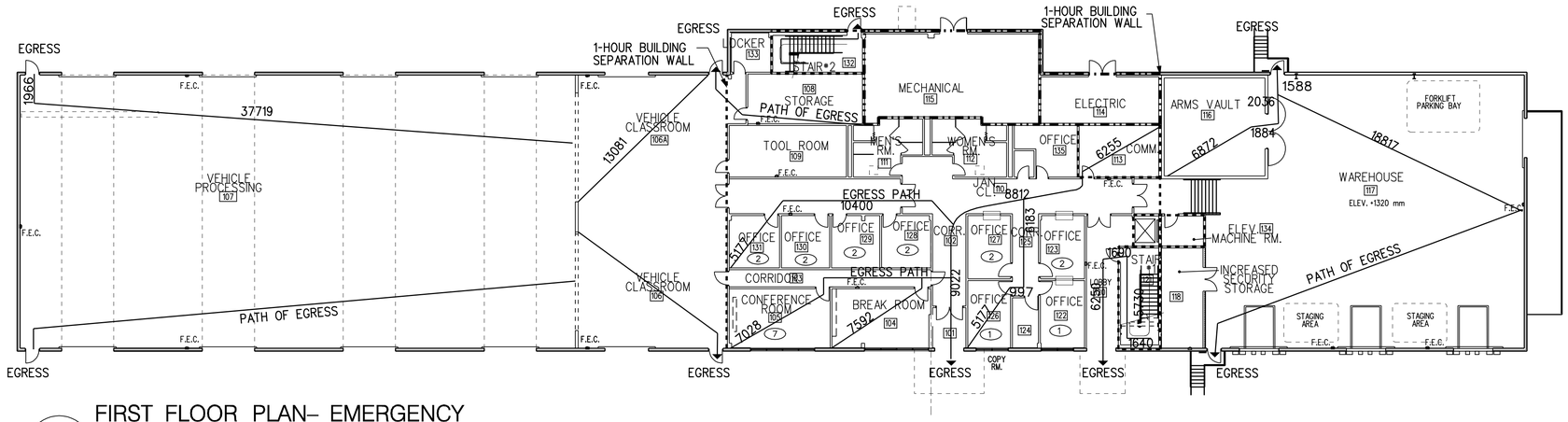

A A900 FIRST FLOOR PLAN– EMERGENCY EGRESS TRAVEL PATH

SCALE 1:200

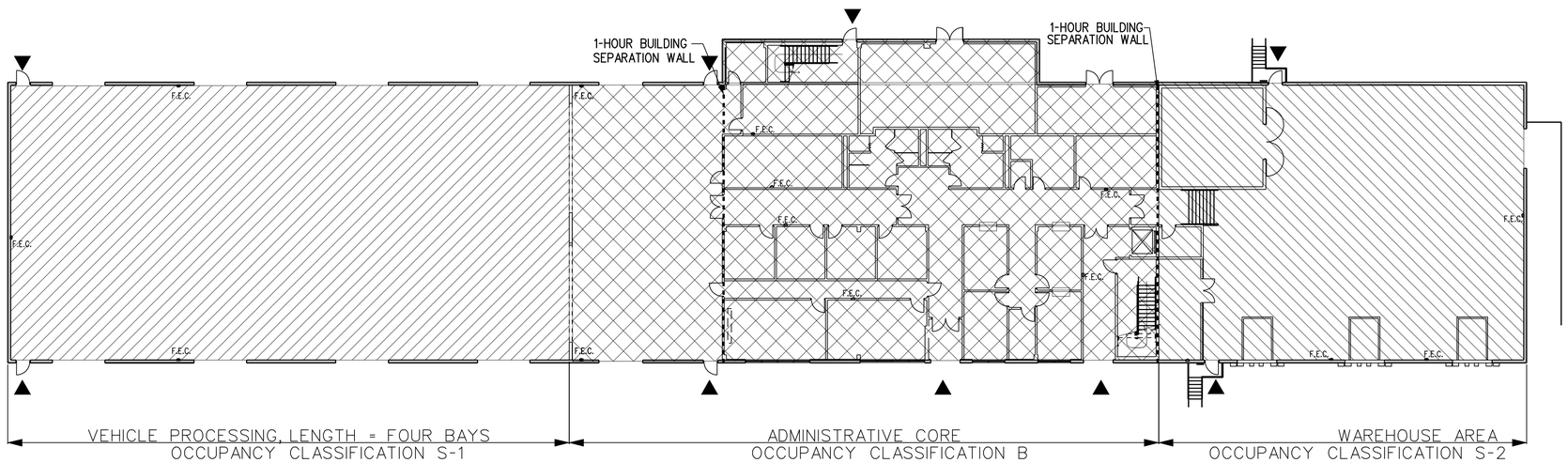

B A900 LIFE SAFETY PLAN – FIRST FLOOR

SCALE 1:200

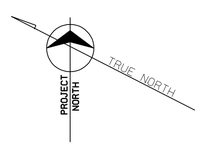

SCALE: 1:100

LIFE SAFETY NOTES

GENERAL EGRESS REQUIREMENTS (LOCATION AND TRAVEL DISTANCE) ARE PROVIDED THE FOLLOWING NOTES:

1. PROVIDE ALL THE AREAS WITH AUTOMATIC SPRINKLER SYSTEM
2. PROVIDE 1800mm OPEN SPACE AROUND PERIMETER OF BUILDING FOR FIRE VEHICLE ACCESS, SEE SITE PLAN.
3. STAIR ENCLOSURES, ELECTRICAL ROOM & MECHANICAL ROOM WALLS, FLOORS & CEILINGS SHALL HAVE 1 HR. FIRE-RATED CONSTRUCTION
4. DISTANCE TO EXITS: 76200 MM MAX W/ FULLY AUTOMATIC SPRINKLERS.
5. ALL OPENINGS OR PENETRATIONS THROUGH FIRE WALLS SHALL BE PROTECTED ACCORDINGLY
6. CORE AREA CORRIDORS DISTANCE SHALL NOT EXCEED CODE REQUIREMENT FOR DEAD-END CORRIDORS (15240 MM W/SPRINKLERS).

LEGEND

- 1 HR FIRE RATED WALL
- 2 HR FIRE RATED WALL
- FIRE EXTINGUISHER CABINET- SEMIRECESSED (FEC)
- (24) OCCUPANCY LOAD, NUMBER OF PERS.
- DIRECTION OF TRAVEL
- 201 ROOM NUMBER

OCCUPANCY CALCULATION AS PER NFPA 101

OFFICE AREA= 100 S.F./ PERSON
CONFERENCE ROOM= 15 S.F./ PERSON
TOTAL OCCUPANCY LOAD=1500 PEOPLE

GENERAL NOTES

IBC 2003 : TYPE IIB
STORIES: TWO MAXIMUM
ADA: APPLICABLE

BUILDING FOOTPRINT: 2128.7 SQ. METERS

VEHICLE TRAINING: 202.07 M^2
VEHICLE PROCESSING AREA: 766.2 M^2
CORE AREA: 659 M^2
WAREHOUSE: 502 M^2

ALL DIMENSIONS ARE IN MILLIMETERS

US Army Corps of Engineers
New York District

Mark	Description	Date	Appr.
1	REVISED NOTE IN LEGEND	17 AUG 2006	

U.S. ARMY ENGINEER DISTRICT
CORPS OF ENGINEERS
NEW YORK, NEW YORK

Designed by: | Date: | Date Plot: 22-AUG-2005
Dwn by: | Ckd by: | Solicitation no.:
Reviewed by: | Contract no.:
Submitted by: | Plot date: 22-AUG-2005 11:16 | Plot by: e3endsjb | Scale: 1:200000/1:00000
File name: S:\Mission\Military\For Drum\FDO\Architectural\Forms\D577108_A-900xxx.dgn

PN 577108
FORCE MODERNIZATION EDUCATION / TRANSITIONAL FACILITY
FORT DRUM, NEW YORK

Life Safety Plan
First Floor Plan

Sheet reference number:
A–900

Plot Date: 22-AUG-2005 11:16
Submitted by: e3endsjb
S:\fileroom\military\Fort Drum\ForceMOD\Architectural\ForceMOD577108_A-900xxx.dgn

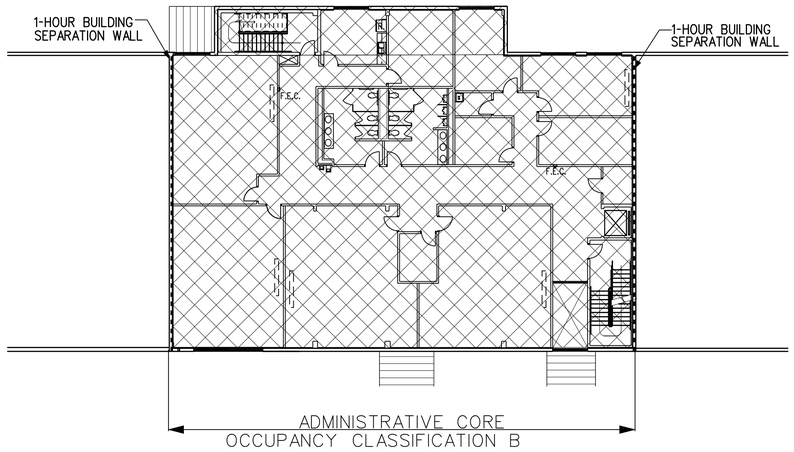

A901 A — UPPER FLOOR ADMINISTRATIVE CORE LIFE SAFETY PLAN

SCALE 1:200

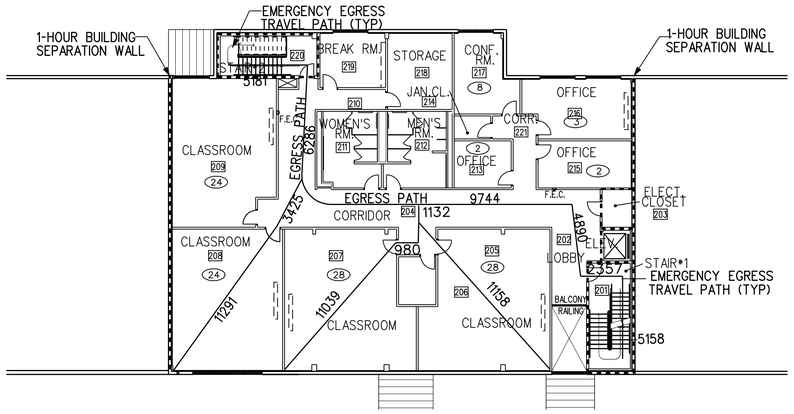

A901 B — UPPER FLOOR ADMINISTRATIVE CORE EMERGENCY EGRESS TRAVEL PATH

SCALE 1:200

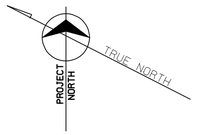

0 2000 4000 10000

SCALE: 1:100

LIFE SAFETY NOTES

GENERAL EGRESS REQUIREMENTS (LOCATION AND TRAVEL DISTANCE) ARE PROVIDED THE FOLLOWING NOTES:

1. PROVIDE ALL THE AREAS WITH AUTOMATIC SPRINKLER SYSTEM
2. PROVIDE 1800mm OPEN SPACE AROUND PERIMETER OF BUILDING FOR FIRE VEHICLE ACCESS, SEE SITE PLAN.
3. STAIR ENCLOSURES, ELECTRICAL ROOM & MECHANICAL ROOM WALLS, FLOORS & CEILINGS SHALL HAVE 1 HR. FIRE-RATED CONSTRUCTION
4. DISTANCE TO EXITS: 76200 MM MAX W/ FULLY AUTOMATIC SPRINKLERS.
5. ALL OPENINGS OR PENETRATIONS THROUGH FIRE WALLS SHALL BE PROTECTED ACCORDINGLY
6. CORE AREA CORRIDORS DISTANCE SHALL NOT EXCEED CODE REQUIREMENT FOR DEAD-END CORRIDORS (15240 MM W/SPRINKLERS)

LEGEND

- 1 HR FIRE RATED WALL
- 2 HR FIRE RATED WALL

FIRE EXTINGUISHER CABINET-SEMIRECESSED (FEC)

(24) OCCUPANCY LOAD, NUMBER OF PERS.

DIRECTION OF TRAVEL

201 ROOM NUMBER

OCCUPANCY CALCULATION AS PER NFPA 101

OFFICE AREA= 100 S.F./ PERSON
CONFERENCE ROOM= 15 S.F./ PERSON
TOTAL OCCUPANCY LOAD=1500 PEOPLE

GENERAL NOTES

IBC 2003 : TYPE IIB
STORIES: TWO MAXIMUM
ADA: APPLICABLE

BUILDING FOOTPRINT: 2128.7 SQ. METERS

VEHICLE TRAINING: 202.07 M^2
VEHICLE PROCESSING AREA: 766.2 M^2
CORE AREA: 659 M^2
WAREHOUSE: 502 M^2

ALL DIMENSIONS ARE IN MILLIMETERS

US Army Corps of Engineers
New York District

Mark	Description	Date	Appr.
1	REVISED NOTE IN LEGEND	17 AUG 2006	

U.S. ARMY ENGINEER DISTRICT
CORPS OF ENGINEERS
NEW YORK, NEW YORK

Designed by: | Date: | Scale: AS NOTED
Dwn by: | Ckd by: | Solicitation no.:
Reviewed by: | Contract no.:
Submitted by: | Plot date: 22-AUG-2005 11:16 | Plot by: eJendsjb | Rev. date: 00/00/00 | Rev. time: 00:00
File name: S:\filerooms\military\fort Drum\ForceMOD\Architectural\Floor\ADCORE_A-901xxx.dgn

FORCE MODERNIZATION EDUCATION TRANSITIONAL FACILITY
FORT DRUM, NEW YORK

Life Safety Plan
Second Floor Plan

PN 57708
Sheet reference number:
A-901

Submitted by: e3endsjb
S:\filerooms\military\Fort Drum\ForceMOD\Architectural\Floor\ADCORE_A-901xxx.dgn
Plot Date: 22-AUG-2005 11:16

UNIT HEATER (UH) SCHEDULE

UNIT NO.	LOCATION	OUT PUT KW	AIR DATA CMS (MIN)	AIR DATA EAT °C	HOT WATER DATA EWT°C	HOT WATER DATA COIL PRESSURE DROP(mm)	HOT WATER DATA L/S	TYPE	W	REMARKS
UH-1	RM 115 MECH. ROOM	4.565	0.2360	10	82.2	670	0.1135	HORIZONTAL PROPELLER	9	SEE NOTES 1,2,3
UH-2	RM 115 MECH. ROOM	4.565	0.2360	10	82.2	670	0.1135	HORIZONTAL PROPELLER	9	SEE NOTES 1,2,3
UH-3	RM 108 STORAGE	4.565	0.2360	10	82.2	670	0.1135	HORIZONTAL PROPELLER	9	SEE NOTES 1,2,3
UH-4	RM 109 TOOL ROOM	1.992	0.115	10	82.2	244	0.0505	HORIZONTAL PROPELLER	9	SEE NOTES 1,2,3
UH-5	RM 116 ARMS VAULT	4.565	0.2366	10	82.2	670	0.1135	HORIZONTAL PROPELLER	9	SEE NOTES 1,2,3
UH-6	RM 114 ELEC. ROOM	1.992	0.115	10	82.2	244	0.0505	HORIZONTAL PROPELLER	9	SEE NOTES 1,2,3
UH-7	ATTIC	4.565	0.2360	10	82.2	670	0.1135	HORIZONTAL PROPELLER	9	SEE NOTES 2,3,4
UH-8	ATTIC	4.565	0.2360	10	82.2	670	0.1135	HORIZONTAL PROPELLER	9	SEE NOTES 2,3,4
UH-9	ATTIC	4.565	0.2360	10	82.2	670	0.1135	HORIZONTAL PROPELLER	9	SEE NOTES 2,3,4
UH-10	ATTIC	4.565	0.2360	10	82.2	670	0.1135	HORIZONTAL PROPELLER	9	SEE NOTES 2,3,4
UH-11	ATTIC	4.565	0.2360	10	82.2	670	0.1135	HORIZONTAL PROPELLER	9	SEE NOTES 2,3,4
UH-12	ATTIC	4.565	0.2360	10	82.2	670	0.1135	HORIZONTAL PROPELLER	9	SEE NOTES 2,3,4

NOTES:
1- UNIT SHALL BE THERMOSTATICALLY CONTROLLED BY WALL MOUNTED THERMOSTAT.
2- PROVIDE LOCAL SAFETY DISCONNECT SWITCH.
3- HEATING COIL PERFORMANCE DATA IS BASED ON 50% PROPYLENE GLYCOL.
4- UNIT SHALL BE THERMOSTATICALLY CONTROLLED BY UNIT MOUNTED THERMOSTAT.

CABINET UNIT HEATER (CHU) SCHEDULE

UNIT NO.	LOCATION	AIR DATA CMS	AIR DATA EAT °C	HOT WATER DATA EWT°C	HOT WATER DATA KW	HOT WATER DATA COIL PRESSURE DROP(mm)	HOT WATER DATA L/S	TYPE	REMARKS
CUH-1	VESTIBULE (RM 101)	0.108	10	82.2	3.176	50	0.0757	CEILING MOUNTED FULLY RECESSED	SEE NOTES 1,2,3
CUH-2	LOBBY (RM 120)	0.108	10	82.2	3.176	50	0.0757	CEILING MOUNTED FULLY RECESSED	SEE NOTES 1,2,3
CUH-3	STAIR #2	0.297	10	82.2	10.03	335	0.2334	WALL INVERTED	SEE NOTES 1,2,3,4
CUH-4	STAIR #1	0.203	10	82.2	7.178	183	0.1703	WALL INVERTED	SEE NOTES 1,2,3,4

NOTES:
1- UNIT SHALL BE THERMOSTATICALLY CONTROLLED BY WALL MOUNTED THERMOSTAT.
2- PROVIDE LOCAL SAFETY DISCONNECT SWITCH.
3- HEATING COIL PERFORMANCE DATA IS BASED ON 50% PROPYLENE GLYCOL.
4- SURFACE MOUNT 200 ABOVE FLOOR, BOTTOM OUTLET, TOP FRONT INLET.

FAN SCHEDULE

UNIT NO.	LOCATION	SERVICE	TYPE	L/S	ESP Pa	RPM	KW	VOLTAGE	PHASE	SONES	REMARKS
EF-1	LOCKER RM 110	LOCKER RM EXHAUST	CENTRIFUGAL-DIRECT DRIVE RECESSED-CEILING	119	125	1050	0.084	120	1	2.5	SEE NOTES 2,3,4
EF-2	MECHANICAL RM 115	LADIES RM, MENS RM, JANITORS CLOSET EXHAUST	CENTRIFUGAL-DIRECT DRIVE RECESSED-CEILING	424	187	1050	0.344	120	1	6.0	SEE NOTES 2,3,4
EF-4	COPY RM 124	COPY RM EXHAUST	CENTRIFUGAL-DIRECT DRIVE RECESSED-CEILING	68	125	1550	0.083	120	1	2.1	SEE NOTES 1,2,3
EF-6	ELECTRIC RM 114	ELECTRIC RM EXHAUST	CENTRIFUGAL-DIRECT DRIVE RECESSED-CEILING	165	125	1550	0.132	120	1	3.9	SEE NOTES 2,3,6
EF-7	BREAK RM 219	WOMENS TOILET EXHAUST	CENTRIFUGAL-DIRECT DRIVE RECESSED-CEILING	424	187	1050	0.344	120	1	6.0	SEE NOTES 2,3,4
EF-10	CONFERENCE RM 105	CONFERENCE RM EXHAUST	CENTRIFUGAL-DIRECT DRIVE RECESSED-CEILING	311	125	1050	0.273	120	1	5.6	SEE NOTES 1,2,3
EF-11	BREAK RM 104	BREAK RM EXHAUST	CENTRIFUGAL-DIRECT DRIVE RECESSED-CEILING	311	125	1050	0.273	120	1	5.6	SEE NOTES 1,2,3
EF-13	ATTIC	VEHICLE PROCESSING EXHAUST (3 OR 4 BAYS)	CENTRIFUGAL-BELT DRIVE	3210	190	887	1.425	200	3	19.5	SEE NOTES 2,3,5
EF-14	ATTIC	VEHICLE PROCESSING EXHAUST (3 OR 4 BAYS)	CENTRIFUGAL-BELT DRIVE	3210	190	887	1.425	200	3	19.5	SEE NOTES 2,3,5
EF-13	ATTIC	VEHICLE PROCESSING EXHAUST (2 BAYS)	CENTRIFUGAL-BELT DRIVE	2549	190	776	1.119	200	3	15.0	SEE NOTES 2,3,5
EF-14	ATTIC	VEHICLE PROCESSING EXHAUST (2 BAYS)	CENTRIFUGAL-BELT DRIVE	2549	190	776	1.119	200	3	15.0	SEE NOTES 2,3,5
EF-15	ATTIC	WAREHOUSE BUILDING EXHAUST	CENTRIFUGAL-BELT DRIVE	3210	190	887	1.425	200	3	19.5	SEE NOTES 2,3,5
EF-16	ATTIC	WAREHOUSE BUILDING EXHAUST	CENTRIFUGAL-BELT DRIVE	3210	190	887	1.425	200	3	19.5	SEE NOTES 2,3,5
EF-17	ELEVATOR MACHINE ROOM	ELEVATOR MACHINE EXHAUST	CENTRIFUGAL-DIRECT DRIVE RECESSED-CEILING	312	125	1050	0.273	120	1	5.6	SEE NOTES 2,3,6
SF-1	MECHANICAL RM 115	MECHANICAL RM SUPPLY	PACKAGED BELT DRIVE PROPELLER WALL FAN	566	125	678	0.164	120	1	6.9	SEE NOTE 2,7

1

NOTES:
1. CONTROLLED BY ON / OFF SWITCH IN ROOM.
2. PROVIDE LOCAL SAFETY DISCONNECT SWITCH.
3. PROVIDE BACKDRAFT DAMPER.
4. CONTROLLED BY OCCUPIED/UNOCCUPIED CYCLE, FOR AHU SERVING SPACE.
5. FANS SHALL NOT EXCEED A SOUND PRESSURE LEVEL OF 60 dbA MEASURED 1 METER FROM CABINET. FANS SHALL BE TWO SPEED.
6. PROVIDE WALL MOUNTED THERMOSTAT. INTERLOCK WITH OUTDOOR AIR DAMPER.
7. PROVIDE LOCKABLE WIRE GUARD OVER FAN AND MOTOR.

FINNED TUBE RADIATION FINNED SECTION SCHEDULE

UNIT NO.	EWT (°C)	LWT (°C)	PIPE TYPE	PIPE SIZE (MM)	FINS TYPE	FINS SIZE (MM)	WATTS PER MM	LENGTH (MM)	ROW	TOTAL WATTS	L/S	ENCLOSURE TYPE	REMARKS
FT-1	82.2	71.1	COPPER	19.1	ALUM.	70x76x0.40	0.567	1524	1	864	0.032	NOM. 356mm HIGH W/SLOPING TOP	SEE NOTE 1,2,3,7
FT-2	82.2	71.1	COPPER	19.1	ALUM.	70x76x0.40	0.567	610	1	346	0.032	NOM. 356mm HIGH W/SLOPING TOP	SEE NOTE 1,2,3,7
FT-3	82.2	71.1	COPPER	19.1	ALUM.	70x76x0.40	0.567	1830	1	1036	0.032	NOM. 356mm HIGH W/SLOPING TOP	SEE NOTE 1,2,3,4,7
FT-4	82.2	71.1	COPPER	19.1	ALUM.	70x76x0.40	0.567	4267	1	2420	0.0438	NOM. 356mm HIGH W/SLOPING TOP	SEE NOTE 1,2,3,4,7
FT-5	82.2	71.1	COPPER	19.1	ALUM.	70x76x0.40	0.567	4880	1	3111	0.0569	NOM. 356mm HIGH W/SLOPING TOP	SEE NOTE 1,2,3,4,5,7
FT-6	82.2	71.1	COPPER	19.1	ALUM.	70x76x0.40	0.567	2438	1	1383	0.032	NOM. 356mm HIGH W/SLOPING TOP	SEE NOTE 1,2,3,7
FT-7	82.2	71.1	COPPER	19.1	ALUM.	70x76x0.40	0.567	2438	1	1383	0.032	NOM. 356mm HIGH W/SLOPING TOP	SEE NOTE 1,2,3,7
FT-8	82.2	71.1	COPPER	19.1	ALUM.	70x76x0.40	0.567	1524	1	864	0.032	NOM. 356mm HIGH W/SLOPING TOP	SEE NOTE 1,2,3,6,7
FT-9	82.2	71.1	COPPER	19.1	ALUM.	70x76x0.40	0.567	4877	1	2765	0.0502	NOM. 356mm HIGH W/SLOPING TOP	SEE NOTE 1,2,3,7
FT-10	82.2	71.1	COPPER	19.1	ALUM.	70x76x0.40	0.567	5486	1	3111	0.0572	NOM. 356mm HIGH W/SLOPING TOP	SEE NOTE 1,2,3,7
FT-11	82.2	71.1	COPPER	19.1	ALUM.	70x76x0.40	0.567	3048	1	1728	0.032	NOM. 356mm HIGH W/SLOPING TOP	SEE NOTE 1,2,3,7
FT-12	82.2	71.1	COPPER	19.1	ALUM.	70x76x0.40	0.567	4877	1	2765	0.0509	NOM. 356mm HIGH W/SLOPING TOP	SEE NOTE 1,2,3,4,5,7
FT-13	82.2	71.1	COPPER	19.1	ALUM.	70x76x0.40	0.567	4877	1	2765	0.0509	NOM. 356mm HIGH W/SLOPING TOP	SEE NOTE 1,2,3,4,5,7
FT-14	82.2	71.1	COPPER	19.1	ALUM.	70x76x0.40	0.567	1676	1	951	0.032	NOM. 356mm HIGH W/SLOPING TOP	SEE NOTE 1,2,3,7
FT-15	82.2	71.1	COPPER	19.1	ALUM.	70x76x0.40	0.567	1676	1	951	0.032	NOM. 356mm HIGH W/SLOPING TOP	SEE NOTE 1,2,3,7
FT-16	82.2	71.1	COPPER	19.1	ALUM.	70x76x0.40	0.567	2743	1	1555	0.032	NOM. 356mm HIGH W/SLOPING TOP	SEE NOTE 1,2,3,7
FT-17	82.2	71.1	COPPER	19.1	ALUM.	70x76x0.40	0.567	1219	1	691	0.032	NOM. 356mm HIGH W/SLOPING TOP	SEE NOTE 1,2,3,7
FT-18	82.2	71.1	COPPER	19.1	ALUM.	70x76x0.40	0.567	2286	1	1296	0.032	NOM. 356mm HIGH W/SLOPING TOP	SEE NOTE 1,2,3,7
FT-19	82.2	71.1	COPPER	19.1	ALUM.	70x76x0.40	0.567	2896	1	1642	0.032	NOM. 356mm HIGH W/SLOPING TOP	SEE NOTE 1,2,3,7
FT-20	82.2	71.1	COPPER	19.1	ALUM.	70x76x0.40	0.567	2743	1	1555	0.032	NOM. 356mm HIGH W/SLOPING TOP	SEE NOTE 1,2,3
FT-21	82.2	71.1	COPPER	19.1	ALUM.	70x76x0.40	0.567	1016	1	576	0.032	NOM. 356mm HIGH W/SLOPING TOP	SEE NOTE 1,2,3

NOTES:
1- ALL FIN TUBE RADIATORS SHALL BE PROVIDED WITH NON-ELECTRIC THERMOSTATICALLY CONTROLLED SUPPLY VALVES TO MAINTAIN ROOM TEMPERATURE AT 12.8 DEGREES CELSIUS. VALVES AND PIPING SHALL BE HOUSED WITHIN RADIATOR ENCLOSURE.
2- BOTTOM OF BASEBOARD ENCLOSURE SHALL BE MOUNTED 150 MM ABOVE FINISHED FLOOR. ENCLOSURE SHALL EXTEND FULL LENGTH OF WALL, SEE FLOOR PLAN FOR WALL LENGTH.
3- PERFORMANCE BASED ON 50% PROPYLENE GLYCOL.
4- FT CONTROLLED AS ONE BY ONE CONTROL VALVE.
5- FT SECTION IN MULTIPLE PLACES, SEE FLOOR PLAN.
6- FT CABINET SHALL ONLY COVER FT ELEMENT FROM CORNER TO WHERE HWS ENTERS WALL NOT FULL WALL LENGTH.
7- DIVERTER FITTINGS AT BYPASS LINE NOT REQUIRED.

US Army Corps of Engineers
New York District

Mark	Description	Date	Appr.
1	EXHAUST FAN SCHEDULE REVISED	17 AUG 05	

U.S. ARMY ENGINEER DISTRICT
CORPS OF ENGINEERS
NEW YORK, NEW YORK

Designed by: | Date: | Size: A1
Dwn by: | Ckd by: | Solicitation no.:
Reviewed by: | Contract no.:
Submitted by: | Plot date: 22-AUG-2005 09:33 | Plot by: e3endem3 | Scale: 1.000000:1.000000
File name: S:\fileroom\military\Fort Drum\ForceMOD\Mechanical\Amendment #2\ForceMOD57708_MH-600xxx.dgn

PN 57708
FORCE MODERNIZATION EDUCATION /TRANSITIONAL FACILITY
FORT DRUM, NEW YORK

MECHANICAL SCHEDULES

Sheet reference number:
M-600

Submitted by: e3endem3 Plot Date: 22-AUG-2005 09:33
S:øfileroomømilitaryøFort DrumøForceMODøMechanicaløAmendment #2øForceMOD57708_MH-600xxx.dgn

PUMP (P) SCHEDULE

DESIGNATION	LOCATION	SERVICE	FLOW L/S	PRESSURE HEAD KPa	TYPE SERIES	(KW)	RPM	IMPELLER SIZE mm	INLET SIZE mm	OUTLET SIZE mm	EFF %	REMARKS
P-1	MECHANICAL RM	HOT WATER SYSTEM MAU-1, MAU-2, AHU-1	7.02	194	END SUCTION CENTRIFUGAL	5.625	1750	206	50	37	60	SEE NOTE 1
P-2	↓	HOT WATER SYSTEM MAU-1, MAU-2, AHU-1	7.02	194	↓	5.625	1750	206	50	37	60	↓
P-3	↓	HOT WATER SYSTEM FIN TUBE, U.H. CAB.U.H.	2.43	194	↓	3.73	1750	197	37	37	48	↓
P-4	↓	HOT WATER SYSTEM FIN TUBE, U.H. CAB.U.H.	2.43	194	↓	3.73	1750	197	32	32	48	↓
P-5	↓	CHILLED WATER SYSTEM AHU-1	8.21	194	↓	5.625	1750	213	50	37	53	↓
P-6	↓	CHILLED WATER SYSTEM AHU.1	8.21	194	END SUCTION CENTRIFUGAL	5.625	1750	213	50	37	53	↓
P-7	↓	BOILER CIRCULATING	4.7	30	IN-LINE CENTRIFUGAL	.375	1750	92	75	75	56	↓
P-8	↓	BOILER CIRCULATING	4.7	30	IN-LINE CENTRIFUGAL	.375	1750	92	75	75	56	↓

NOTES:
1. PERFORMANCE BASED ON 50% GLYCOL. MOTOR SHALL BE NON OVERLOADING.

AIR HANDLING UNIT (AHU) SCHEDULE

PLAN DESIGNATION	SUPPLY FAN: FLOW RATE (L/s)	SUPPLY FAN: MINIMUM OUTDOOR AIR (L/s)	SUPPLY FAN: EXTERNAL STATIC PRESSURE (Pa)	SUPPLY FAN: RPM	SUPPLY FAN: BRAKE POWER (kW)	SUPPLY FAN: MOTOR POWER (kW)	RETURN/EXHAUST FAN: FLOW RATE (L/s)	RETURN/EXHAUST FAN: EXTERNAL STATIC PRESSURE (Pa)	RETURN/EXHAUST FAN: RPM	RETURN/EXHAUST FAN: BRAKE POWER (kW)	RETURN/EXHAUST FAN: MOTOR POWER (kW)	FILTER: TYPE	FILTER: EFFICIENCY (%)	ELECTRICAL (V/Hz/PHASE)	NOTES
AHU-1	3,539	1,180	313	1445	3.6	3.7	3,539	313	709	2.9	3.7	PLEATED	MERV 8	200/60/3	1,2,3
AHU-2	5,663	1,227	313	752	6.6	7.5	5,663	313	497	3.7	5.5	PLEATED	MERV 8	200/60/3	1,2,3
MAU-1	3,209	3,209	313	1729	3.4	3.7	NA	NA	NA	NA	NA	PLEATED	MERV 8	200/60/3	1,2,3,4,5
MAU-1	2,549	2,549	313	975	2.3	3.7	NA	NA	NA	NA	NA	PLEATED	MERV 8	200/60/3	1,2,3,4,6
MAU-2	3,209	3,209	313	1729	3.4	3.7	NA	NA	NA	NA	NA	PLEATED	MERV 8	200/60/3	1,2,3,4

NOTES:
(1) SEE DRAWINGS FOR ARRANGEMENT
(2) EXTERNAL STATIC PRESSURE INCLUDES FILTERS, DUCTWORK, AND COILS NOT IN AHU CASING
(3) FANS SHALL NOT EXCEED A SOUND PRESSURE LEVEL OF 60 dbA MEASURED 1 METER FROM THE CABINET.
(4) FANS SHALL BE TWO SPEED.
(5) CAPACITY OF MAU-1 SHALL BE FOR THREE OR FOUR BAYS.
(6) CAPACITY OF MAU-1 SHALL BE FOR TWO BAYS.

1

BOILER SCHEDULE

UNIT NO.	LOCATION	HOT WATER KG/MM²	KW: IBR GROSS OUTPUT	KW: IBR NET RATING	TEMP °C: EWT	TEMP °C: LWT	FIRING RATE OIL: TYPE	FIRING RATE OIL: L/M	FIRING RATE GAS: TYPE	FIRING RATE GAS: KW	FORCED DRAFT FAN W	REMARKS
B-1	MECH RM	.03	502	436	82	71	—	—	NATURAL	626	—	SEE NOTE 1, 2
B-2	MECH RM	.03	502	436	82	71	—	—	NATURAL	626	—	SEE NOTE 1, 2

NOTES:
1- PROVIDE LOCAL SAFETY DISCONNECT SWITCH.
2- HEATING HOT WATER SHALL BE OPERATED WITH 50% PROPYLENE GLYCOL.

AIR SEPARATOR (AS) SCHEDULE

UNIT NO.	SYSTEM SERVED	MIN CAP L/S	REMARKS
AS-1	HEATING	9.45	SEE NOTE 1
AS-2	COOLING	8.21	SEE NOTE 1

NOTES
1- ASME

DUCTLESS SPLIT SYSTEM AIR CONDITIONING UNIT SCHEDULE

INDOOR UNIT: UNIT NO.	DRY L/S HI-LO	MOISTURE REMOVAL L/H	DIMENSIONS (MM) WxDxH	APPR. WT KG	OUTDOOR UNIT: UNIT NO.	TOTAL COOLING CAPACITY KW	DIMENSIONS (MM) WxDxH	APPR. WT KG	REMARKS
AC-1	335-250	3.3	1400x230x330	26	DX-1	7.032	860x310x1245	92	SEE NOTES 1,2,3,4
AC-2	335-250	3.3	1400x230x330	26	DX-2	7.032	860x310x1245	92	SEE NOTES 1,2,3,4

NOTES
1. PROVIDE LOW AMBIENT CONTROLS
2. UNIT SHALL BE PROVIDED WITH A CRANKCASE HEATER BY WALL MOUNTED THERMOSTAT.
3. UNIT SHALL BE THERMOSTATICALLY CONTROLLED.
4. FOR ELECTRICAL CHARACTERISTICS, SEE ELECTRICAL DRAWINGS.
5. UNIT SHALL OPERATE AT CAPACITY SHOWN WHEN CONDENSING UNIT IS LOCATED AS SHOWN ON SITE PLAN.

EXPANSION TANK (ET) SCHEDULE

PLAN DESIGNATION	TYPE	LOCATION	CAPACITY (L)	RATED PRESSURE (kPa)	MAXIMUM PRESSURE (kPa)	MINIMUM PRESSURE (kPa)	NOTES
ET-1	VERTICAL BLADDER	BOILER RM	500	862	200	124	1,2,3
ET-2	VERTICAL BLADDER	BOILER RM	205	862	200	124	1,2,3

NOTES:
(1) CONSTRUCTED IN ACCORDANCE WITH ASME SECTION VIII DIVISION 1
(2) ET SHALL SET ON 150 mm CONCRETE EQUIPMENT BASE
(3) ROUTE DRAINS TO NEAREST FLOOR DRAIN

ALL NOTES SHOWN MAY NOT APPEAR IN SCHEDULE

DIFFUSERS, GRILLES & REGISTERS SCHEDULE

PLAN DESIGNATION	BASIS OF DESIGN MANUFACTURER	BASIS OF DESIGN	TYPE	MAX. PRESS. DROP (Pa)	MAXIMUM NC LEVEL	FINISH	NOTES
RG-1	TUTTLE & BAILEY	T70	HORIZONTAL BAR SINGLE DEFLECTION	24.88	30	WHITE	(1) (2)
EG-1	TUTTLE & BAILEY	T70	HORIZONTAL BAR SINGLE DEFLECTION	24.88	30	WHITE	(3)
SG-1	TUTTLE & BAILEY	T50	HORIZONTAL BAR SINGLE DEFLECTION	24.88	30	WHITE	(1) (2)

NOTES:
(1) DIFFUSER, GRILLE, OR REGISTER SHALL BE SUITABLE FOR LAY-IN CEILING
(2) USE 600 X 600 MODULAR SIZE, SEE PLANS FOR DUCT SIZE
(3) SEE PLANS FOR GRILL AND REGISTER SIZE

HEATING WATER COIL (HC) SCHEDULE

PLAN DESIGNATION	QTY	SERVICE	FLOW RATE (L/s)	MINIMUM COIL AREA (m^2)	MAXIMUM FACE VELOCITY (m/s)	MAXIMUM PRESSURE DROP (Pa)	MINIMUM ROWS	AIRSIDE CONDITIONS: EAT (°C)	AIRSIDE CONDITIONS: LAT (°C)	WATERSIDE CONDITIONS: FLOW RATE (L/s)	WATERSIDE CONDITIONS: EWT (°C)	WATERSIDE CONDITIONS: LWT (°C)	ACV SIZE (mm)	MAXIMUM PRESSURE DROP (kPa): COIL	MAXIMUM PRESSURE DROP (kPa): ACV	MAXIMUM PRESSURE DROP (kPa): TOTAL	NOTES
HC-1	1	AHU-1	3,539	1.4	2.5	190	2	2.3	29.4	1.4	82.2	60.0	32	6.0	19.4	25.4	(1)
HC-2	1	AHU-2	5,663	2.1	2.7	190	2	7.2	29.4	1.8	82.2	60.0	40	6.0	19.4	25.4	(1)
HC-3	1	MAU-1	3,209	1.2	2.6	190	2	-28.9	12.8	1.9	82.2	60.0	2@32	6.0	10.5	16.4	(1)(2)(3)
HC-3	1	MAU-1	2,549	1.2	2.6	190	2	-28.9	12.8	1.9	82.2	60.0	2@32	6.0	10.5	16.4	(1)(2)(4)
HC-4	1	MAU-2	3,209	1.2	2.6	190	2	-28.9	12.8	1.9	82.2	60.0	2@32	6.0	10.5	16.4	(1)(2)

NOTES:
(1) CAPACITIES BASED ON 50% PROPYLENE GLYCOL MIXTURE FOR HEATING WATER
(2) TWO CONTROL VALVES SHALL BE CONNECTED IN PARALLEL. THE FIRST CONTROL VALVE SHALL MODULATE TO 100% BEFORE THE SECOND CONTROL VALVE IS OPENED.
(3) CAPACITY OF HC-3 SHALL BE FOR THREE OR FOUR BAYS.
(4) CAPACITY OF HC-3 SHALL BE FOR TWO BAYS.

1

WATER COOLING COIL (WCC) SCHEDULE

PLAN DESIGNATION	QTY	SERVICE	FLOW RATE (L/s)	MINIMUM COIL AREA (m^2)	MAXIMUM FACE VELOCITY (m/s)	MAXIMUM PRESSURE DROP (Pa)	MINIMUM ROWS	AIRSIDE: EAT (°C DB)	AIRSIDE: EAT (°C WB)	AIRSIDE: LAT (°C DB)	AIRSIDE: LAT (°C WB)	WATERSIDE: FLOW RATE (L/s)	WATERSIDE: EWT (°C)	WATERSIDE: ACV SIZE (mm)	MAX PRESSURE DROP (kPa): COIL	ACV	TOTAL	NOTES
WCC-1	1	AHU-1	3,539	1.4	2.5	190	6	25.4	18.4	12.8	12.5	3.4	7.2	50	53.8	22.4	76.2	(1)
WCC-2	1	AHU-2	5,663	2.2	2.5	190	6	24.8	17.9	12.8	12.4	5.0	7.2	65	59.8	23.9	83.7	(1)

NOTES:
(1) CAPACITIES BASED ON 40% PROPYLENE GLYCOL MIXTURE FOR CHILLED WATER

GLYCOL MAKE-UP PACKAGE (GT)

DESIGNATION ON DRAWING	LOCATION	SYSTEM SERVED	MAKE-UP CAPACITY LITERS/MIN.@KPa	MOTOR SIZE WATTS	PRESSURE RANGE KPa	SOLUTION CONTAINER LITERS	DIMENSIONS (HEIGHT X DIA.) mm x mm	REMARKS
GT-1	MECH ROOM	HEATING WATER PIPING	6.81@345	250	69-345	190	1080X710	See NOTES 1,2, 3
GT-2	MECH ROOM	COOLING WATER PIPING	6.81@345	250	69-345	190	1080X710	See NOTES 1,2, 3

NOTES:
1. UNIT SHALL INCUDE: SOLUTION CONTAINER AND LID (TRANSLUCENT POLYETHYLENE CONTAINER), PUMP, MOTOR, MAGNETIC STARTER, STAINER, LOCAL SAFETY DISCONNECT SWITCH, SHUT-OFF VALVE, RELIEF VALVE, PRIMING VALVE, PRESSURE REDUCING VALVE (PRV), PRESSURE GAUGE, PRESSURE TANK AND PRESSURE CONTROL.
2. UNIT SHALL FEATURE A CUT-OFF AND ALARM ARRANGEMENT WHICH WILL STOP THE PUMP IN CASE OF EXCESSIVE PRESSURE, OR A LOW SOLUTION LEVEL, AND ACTIVATE AN AUDIBLE ALARM (WHICH CAN BE SILENCED) AND A VISUAL ALARM.
3. SETTING FOR FILL PRESSURE OF PRV WILL BE 82.8 Pka.

AIR COOLED LIQUID CHILLER SCHEDULE

UNIT NO.	CHILLER: CAPACITY KW (NOM.) @ 34.65°C AMBIENT AIR	L/S	TEMP (°C) IN	TEMP (°C) OUT	PRESS DROP (MAX) (MM)	EER	INPUT KW/TON	COMPRESSOR: NOM SIZE (KW)	VOLT/PHASE	STEPS OF UNLOADING	NO. OF COMP.	CONDENSER: NOM. SIZE (KW)	NO. OF COILS	CONDENSER FANS: NO. OF FANS	W	VOLT/PHASE	REMARKS
CH-1	199/69.1	8.67	12.8	7.2	2073	9.8	69.1/56.6	211	NOTE 5	100-75-50-25	4	211	2	6	746	NOTE 5	SEE NOTES 1, 2,3,4,5

NOTE:
1-PROVIDE REDUCED VOLTAGE STARTERS FOR EACH COMPRESSOR.
2-UNIT SHALL BE COMPATIBLE WITH AHU-1.
3-CHILLER SHALL BE OPERATED WITH 50% PROPYLENE GLYCOL.
4-PROVIDE LOCAL SAFETY DISCONNECT SWITCH.
5-SEE ELECTRICAL DRAWINGS FOR ELECTRICAL POWER CHARACTERISTICS.

US Army Corps of Engineers
New York District

Mark: 1 | AIR HANDLING UNIT AND HEATING WATER COIL SCHEDULES REVISED | 17 AUG 05

U.S. ARMY ENGINEER DISTRICT
CORPS OF ENGINEERS
NEW YORK, NEW YORK

Designed by: | Dwn by: | Ckd by: | Reviewed by: | Submitted by:
Date: | Size: A1 | Solicitation no.: | Contract no.:
Plot date: 22-AUG-2005 09:33
Plot by: e3endem3
Scale: 1.000000:1.000000
File name: S:\fileroom\military\Fort Drum\ForceMOD\Mechanical\Amendment #2\ForceMOD57708_MH-601xxx.dgn

PN 57708
FORCE MODERNIZATION EDUCATION /TRANSITIONAL FACILITY
FORT DRUM, NEW YORK

MECHANICAL SCHEDULES

Sheet reference number: M–601

Submitted by: e3endem3 Plot Date: 22-AUG-2005 09:33
S:\fileroom\military\Fort Drum\ForceMOD\Mechanical\Amendment #2\ForceMOD57708_MH-601xxx.dgn

VEHICLE EXHAUST HOSE SCHEDULE

DESIGNATION	LOCATION	SERVICE	L/S	PRESSURE HEAD ESP Pa	KW	PH	V	RPM	REMARKS
COEF-1	VEHICLE PROC'G BAYS	VEHICLE EXHAUST	760	2000	2.2	3	208	2900	SEE NOTE 1
COEF-2	VEHICLE PROC'G BAYS	VEHICLE EXHAUST	760	2000	2.2	3	208	2900	SEE NOTE 1
COEF-3	VEHICLE PROC'G BAYS	VEHICLE EXHAUST	760	2000	2.2	3	208	2900	SEE NOTE 1
COEF-4	VEHICLE PROC'G BAYS	VEHICLE EXHAUST	760	2000	2.2	3	208	2900	SEE NOTE 1

NOTE:

1. PROVIDE MAGNETIC STARTER AND LOCAL SAFETY DISCONNECT SWITCHES.

INFRA-RED HEATER SCHEDULE (FOUR BAYS)

UNIT	LOCATION	KW	W	PH	V	TUBE LENGTH MM	REMARKS
IRH-1	VEHICLE PROCESSING	43.95	29.9	1	120	15240	SEE NOTES 1,2,3,4
IRH-2	VEHICLE PROCESSING	43.95	29.9	1	120	15240	SEE NOTES 1,2,3,4
IRH-3	VEHICLE PROCESSING	43.95	29.9	1	120	15240	SEE NOTES 1,2,3,4
IRH-4	VEHICLE PROCESSING	43.95	29.9	1	120	15240	SEE NOTES 1,2,3,4
IRH-5	WAREHOUSE	58.60	29.9	1	120	21336	SEE NOTES 1,2,3,4
IRH-6	WAREHOUSE	58.60	29.9	1	120	21336	SEE NOTES 1,2,3,4

NOTES:
1. PROVIDE STRAIGHT TUBE CONFIGURATION, DIRECT SPARK IGNITION, INTERMITTENT BLOWER WITH PRE-PURGE CYCLE, ELECTRONIC FLAME MONITORING, ETC.
2. UNIT SHALL BE DIRECTLY VENTED OUTDOORS WITH INSULATED FLUE PIPE AND COMBUSTION AIR SUPPLIED DIRECTLY FROM OUTDOORS BY PIPE.
3. UNITS SHALL BE THERMOSTATICALLY CONTROLLED.
4. PROVIDE LOCAL SAFETY DISCONNECT SWITCH.

INFRA-RED HEATER SCHEDULE (THREE BAYS)

UNIT	LOCATION	KW	W	PH	V	TUBE LENGTH MM	REMARKS
IRH-1	VEHICLE PROCESSING	35.16	29.9	1	120	12192	SEE NOTES 1,2,3,4
IRH-2	VEHICLE PROCESSING	35.16	29.9	1	120	12192	SEE NOTES 1,2,3,4
IRH-3	VEHICLE PROCESSING	35.16	29.9	1	120	12192	SEE NOTES 1,2,3,4
IRH-4	VEHICLE PROCESSING	35.16	29.9	1	120	12192	SEE NOTES 1,2,3,4

NOTES:
1. PROVIDE STRAIGHT TUBE CONFIGURATION, DIRECT SPARK IGNITION, INTERMITTENT BLOWER WITH PRE-PURGE CYCLE, ELECTRONIC FLAME MONITORING, ETC.
2. UNIT SHALL BE DIRECTLY VENTED OUTDOORS WITH INSULATED FLUE PIPE AND COMBUSTION AIR SUPPLIED DIRECTLY FROM OUTDOORS BY PIPE.
3. UNITS SHALL BE THERMOSTATICALLY CONTROLLED.
4. PROVIDE LOCAL SAFETY DISCONNECT SWITCH.

INFRA-RED HEATER SCHEDULE (TWO BAYS)

UNIT	LOCATION	KW	W	PH	V	TUBE LENGTH MM	REMARKS
IRH-1	VEHICLE PROCESSING	23.44	29.9	1	120	7620	SEE NOTES 1,2,3,4
IRH-2	VEHICLE PROCESSING	23.44	29.9	1	120	7620	SEE NOTES 1,2,3,4
IRH-3	VEHICLE PROCESSING	23.44	29.9	1	120	7620	SEE NOTES 1,2,3,4
IRH-4	VEHICLE PROCESSING	23.44	29.9	1	120	7620	SEE NOTES 1,2,3,4

NOTES:
1. PROVIDE STRAIGHT TUBE CONFIGURATION, DIRECT SPARK IGNITION, INTERMITTENT BLOWER WITH PRE-PURGE CYCLE, ELECTRONIC FLAME MONITORING, ETC.
2. UNIT SHALL BE DIRECTLY VENTED OUTDOORS WITH INSULATED FLUE PIPE AND COMBUSTION AIR SUPPLIED DIRECTLY FROM OUTDOORS BY PIPE.
3. UNITS SHALL BE THERMOSTATICALLY CONTROLLED.
4. PROVIDE LOCAL SAFETY DISCONNECT SWITCH.

US Army Corps of Engineers
New York District

Mark	Description	Date	Appr.
1	INFRA-RED HEATER SCHEDULE REVISED AND ADDED	17 AUG 05	

U.S. ARMY ENGINEER DISTRICT
CORPS OF ENGINEERS
NEW YORK, NEW YORK

Designed by: | Date: | Scale: As noted
Dwn by: | Ckd by: | Solicitation no.:
Reviewed by: | Contract no.:
Submitted by: | Plot date: 22-AUG-2005 09:33 | Plot by: e3endem3 | Size: 0.00000x0.00000
File name: S:\Military\Military Fort Drum\Force\CD\Mechanical\Amendment #2\ForceM0D57708_M-602xxx.dgn

FORCE MODERNIZATION EDUCATION (TRANSITIONAL FACILITY)
FORT DRUM, NEW YORK

MECHANICAL SCHEDULES-3

Sheet reference number:
M-602

Submitted by: e3endem3 Plot Date: 22-AUG-2005 09:33
S:\filer\om\military\Fort Drum\Force\MOD\Mechanical\Amendment #2\ForceM0D57708_M-602xxx.dgn

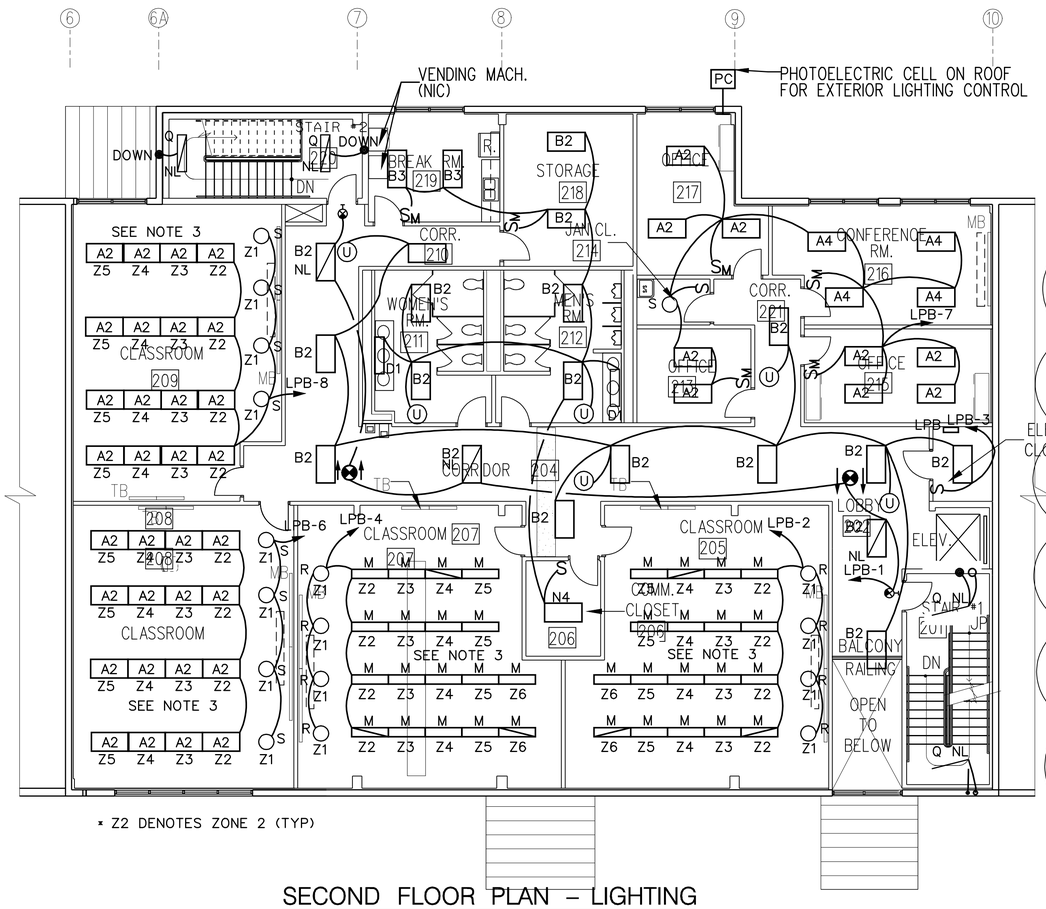

SECOND FLOOR PLAN – LIGHTING

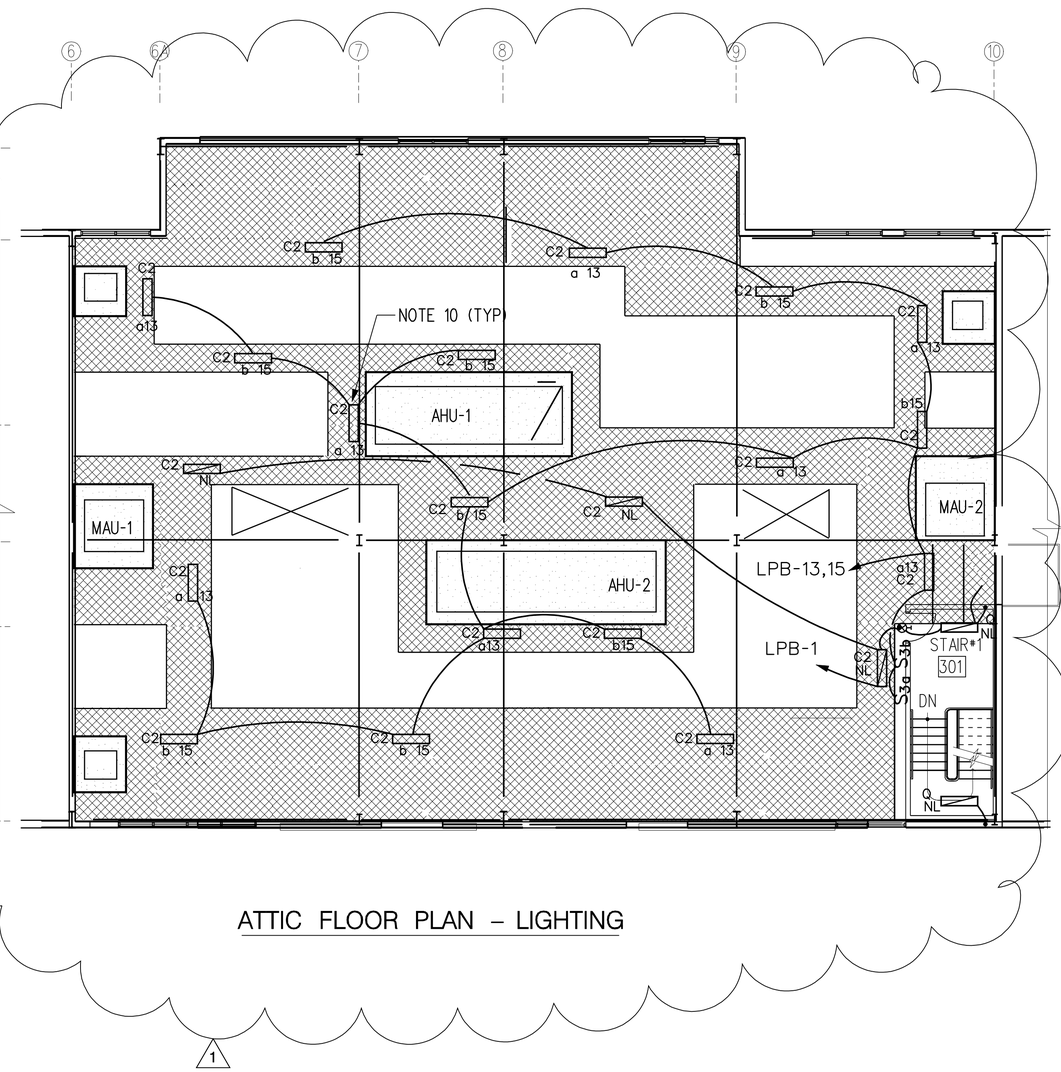

ATTIC FLOOR PLAN – LIGHTING

NOTES:

1. FOR GENERAL NOTES, SYMBOL LIST, SEE DWG. E–001
2. FOR LIGHTING FIXTURE DETAILS AND SCHEDULE, SEE DWG. E–606 & E–607
3. PROVIDE DIMING MODULE CONTROLLERS FOR 6 ZONES, WALL MOUNTED LOCATED NEAR THE INSTRUCTOR'S DESK IN CLASSEOOMS 205, 207, 208 & 209; (SIMILAR TO LUTRON GRAFIK EYE 3000 SERIES) AND ONE ZONE REMOTE CONTROLLERS (SIMILAR TO LUTRON GRAFIK EYE LOW VOLTAGE TWO–BUTTON ENTRANCE CONTROL) LOCATED AT ENTRANCE DOOR. ENSURE COORDINATION OF DIMMERS, DIMMING BALLAST AND LAMP TYPE WITH MANUFACTURER.
4. HOME RUN CONDUCTORS FOR INDOOR LIGHTING CIRCUIT SHALL BE 2–4MM2, 1–4MM2(G), 21MM C. UNLESS OTHERWISE NOTED.
5. CEILING MOUNTED LUMINAIRES SHALL BE COMPATIBLE WITH THE TYPE OF CEILING SYSTEM IN THE AREA SERVED.
6. INDOOR FLUORESCENT LIGHTING FIXTURES PROVIDED WITH EMERGENCY INVERTOR BALLAST(S) SHALL BE CONNECTED FOR SWITCHED OPERATION UNLESS OTHERWISE NOTED.
7. LIGHTING FIXTURE(S) DESIGNATED AS NIGHT–LITES (N.L.) SHALL BE CONNECTED ALONG WITH EXIT LIGHTS ON 24 HOURS CIRCUITS.
8. COORDINATE MOUNTING OF LIGHTING FIXTURES IN ATTIC FLOOR WITH MECHANICAL EQUIPMENT. MINIMUM MOUNTING HEIGHT AT 2150MM AFF, AND MAXIMUM MOUNTING HEIGHT AT 2600 MM AFF.
9. PROVIDED UNSWITCHED CIRCUIT(S) FOR EXIT SIGNS AND NIGHT LIGHTING FIXTURES.
10. COORDINATE MOUNTING OF LIGHTING FIXTURES WITH MECHANICAL EQUIPMENT. MINIMUM MOUNTING HEIGHT AT 2150 MM AND MAXIMUM MOUNTING HEIGHT AT 2600 MM ABOVE FINISHED FLOOR.

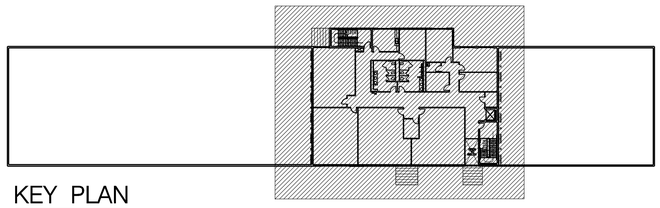

KEY PLAN

SCALE: 1:500

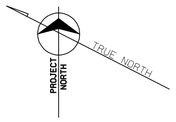

SCALE: 1:100

0 2000 4000 10000

ALL DIMENSIONS ARE IN MILLIMETERS EXCEPTED AS NOTED

US Army Corps of Engineers
New York District

U.S. ARMY ENGINEER DISTRICT
CORPS OF ENGINEERS
NEW YORK, NEW YORK

PN 57708
FORCE MODERNIZATION EDUCATION /TRANSITIONAL FACILITY
FORT DRUM, NEW YORK

SECOND FLOOR PLAN & ATTIC FLOOR PLAN – LIGHTING

Sheet reference number:
E–103

Submitted by: e3endacl Plot Date: 18-AUG-2005 15:20
S:\fileroom\military\Fort Drum\ForceMOD\Electrical\90%SUBMITTAL\Sheetfiles\ForceMod57708_E-103xxx.dgn

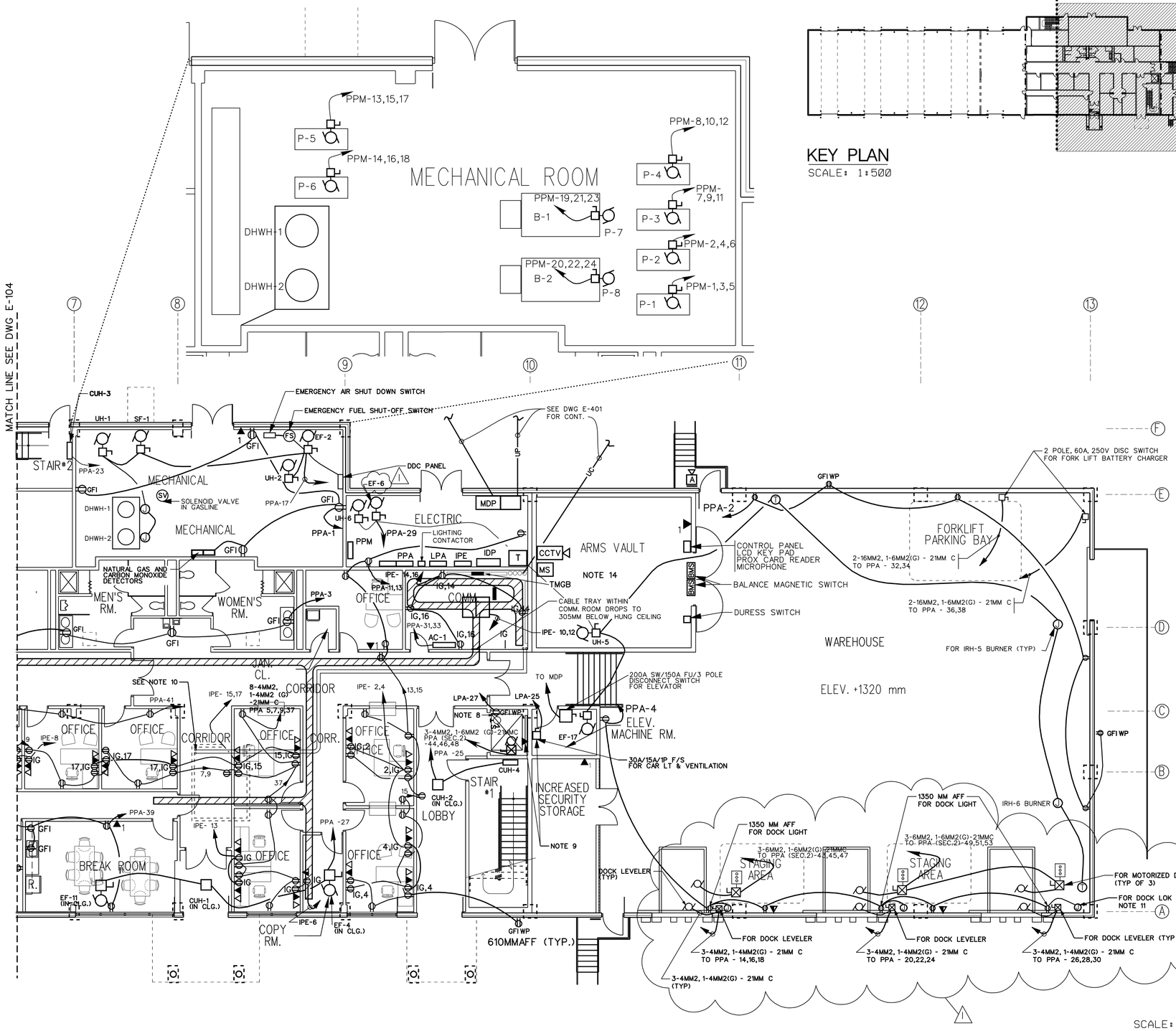

FIRST FLOOR PLAN – POWER & COMMUNICATIONS II

SCALE: 1:100

0 2000 4000 10000

ALL DIMENSIONS ARE IN MILLIMETERS EXCEPTED AS NOTED

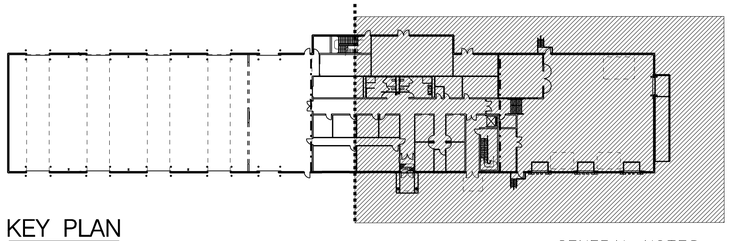

KEY PLAN

SCALE: 1:500

GENERAL NOTES:

1. REFER TO MECHANICAL DRAWINGS FOR THE ACTUAL LOCATION OF MECHANICAL EQUIPMENT.
2. CONVENIENCE RECEPTACLE OUTLET HOME RUNS SHALL BE 2-4MM2, 1-4MM2(G) - 21MM C, UNLESS NOTED OTHERWISE. ISOLATED GROUND RECEPTACLE OUTLET HOMERUNS SHALL BE 2-4MM2, 1-4MM2(G), 1-4MM2(IG) - 21MM C, UNLESS NOTED OTHERWISE.
3. REFER TO MECHANICAL EQUIPMENT CONNECTION SCHEDULE FOR CIRCUITING INFORMATION AND FEEDER SIZES OF MECHANICAL EQUIPMENT.
4. MC CABLE USE SHALL BE LIMITED TO A MAXIMUM LENGTH OF 1830MM.
5. LOCATION OF SWITCHES, RECEPTACLES, PANELS, DISCONNECT SWITCHES, PULL BOXES, AND OTHER DEVICES/EQUIPMENT ARE APPROXIMATE. COORDINATE EQUIPMENT LOCATION WITH OTHER TRADES TO PREVENT INTERFERENCE.
6. REFER TO SITE ELECTRICAL PLAN FOR OUTDOOR POWER WORK.
7. DRAWING SHOWS THE CORRECT NUMBER OF RECEPTACLE OUTLETS AND DATA/COMM JACKS. FINAL LOCATION OF DEVICES MAY CHANGE TO ACCOMODATE THE FINAL FURNITURE ARRANGEMENT.
8. COORDINATE LOCATION OF LIGHT SWITCH AND RECEPTACLE IN ELEVATOR PIT WITH ELEVATOR SHOP DRAWINGS. LIGHT FIXTURE SHALL BE ENCLOSED AND GASKETED, WALL MOUNTED. 150W INCANDESCENT WITH GLOBE AND GUARD - APPLETON #VPWB1075G OR EQUAL.
9. PROVIDE A CIRCUIT FOR ELEVATOR LIGHTS, VENTILATION AND TELEPHONE OUTLET FOR ELEVATOR TELEPHONE. MOUNT TELEPHONE OUTLET AT MIDWAY OF THE SHAFT.
10. 2-4" RGS UP TO COMM. ROOM ON 2ND FLOOR, TERMINATED 4" ABOVE FLOOR SLAB AND PROVIDE GROUND BUSHING.
11. COORDINATE WITH DOCK-LOK SHOP DWG. AND PROVIDE EXTENSION OF WIRING TO PIT AS REQUIRED.
12. REFER TO DWG E-601, SINGLE LINE DIAGRAM FOR FEEDER SIZES.
13. REFER TO DWG E-604 FOR MECHANICAL EQUIPMENT CIRCUIT SCHEDULE.
14. REFER TO DWG E-503 FOR ARMS VAULT SECURITY BLOCK DIAGRAM. COORDINATE WITH FORT DRUM PW IDS TECHNICIAN PRIOR TO INSTALLATION.

US Army Corps of Engineers
New York District

Mark	Description	Date	Appr.
1	GENERAL REVISION	17 AUG 05	

U.S. ARMY ENGINEER DISTRICT CORPS OF ENGINEERS NEW YORK, NEW YORK

Designed by: Date:
Dwn by: Ckd by: Solicitation no.:
Reviewed by: Contract no.:
Submitted by: File name: E:\Temp\military-for-Drum\military\electrical\PN57708-E-105.dgn
Plot date: 18-AUG-2005 15:21
Plot scale: 1:100
Size: 1200W X 1000H

FIRST FLOOR PLAN
POWER & COMMUNICATIONS II

PN 57708
FORCE MODERNIZATION EDUCATION /TRANSITIONAL FACILITY
FORT DRUM, NEW YORK

Sheet reference number:
E–105

Plot Date: 18-AUG-2005 15:21
Submitted by: e3endacl
S:\fileroom\military\Fort Drum\ForceMOD\Electrical\90%SUBMITTAL\Sheetfiles\ForceMod57708_E-105xxx.dgn

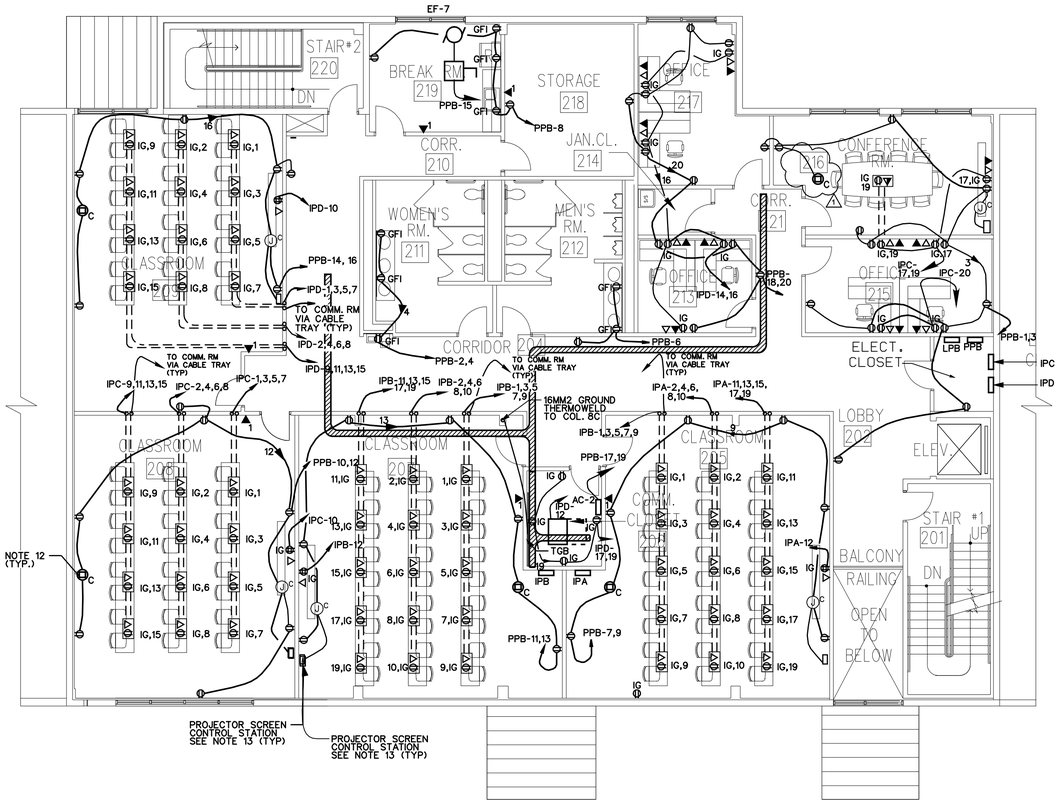

SECOND FLOOR PLAN – POWER & COMMUNICATIONS

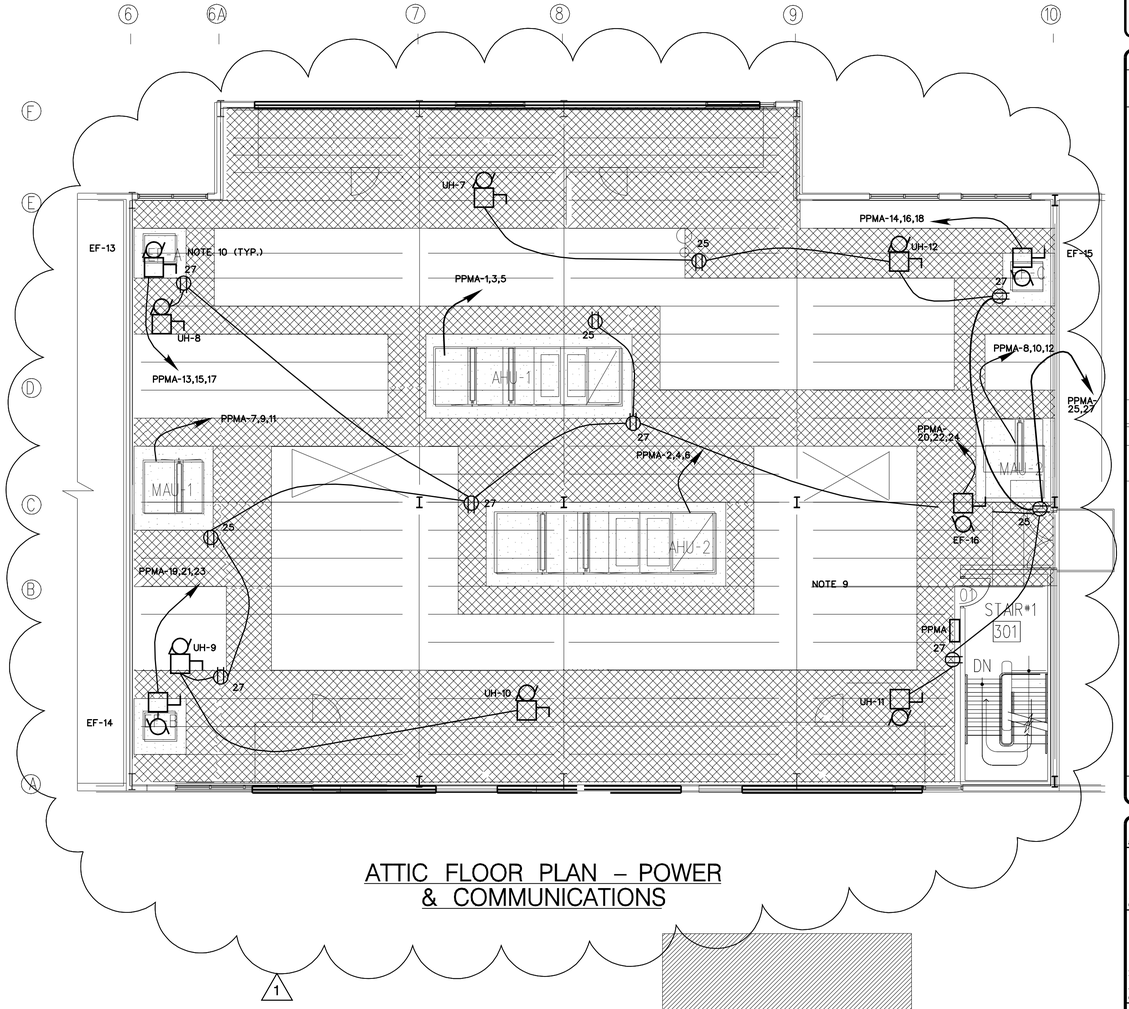

ATTIC FLOOR PLAN – POWER & COMMUNICATIONS

KEY PLAN

SCALE: 1:500

GENERAL NOTES:

1. REFER TO MECHANICAL DRAWINGS FOR THE ACTUAL LOCATION OF MECHANICAL EQUIPMENT.
2. CONVENIENCE RECEPTACLE OUTLET HOME RUNS SHALL BE 2-4MM2, 1-4MM2(G) - 21MM C, UNLESS NOTED OTHERWISE. ISOLATED GROUND RECEPTACLE OUTLET HOMERUNS SHALL BE 2-4MM2, 1-4MM2(G), 1-4MM2(IG) - 21MM C, UNLESS NOTED OTHERWISE.
3. REFER TO MECHANICAL EQUIPMENT CONNECTION SCHEDULE FOR CIRCUITING INFORMATION AND FEEDER SIZES OF MECHANICAL EQUIPMENT.
4. MC CABLE USE SHALL BE LIMITED TO A MAXIMUM LENGTH OF 1830MM.
5. LOCATION OF SWITCHES, RECEPTACLES, PANELS, DISCONNECT SWITCHES, PULL BOXES, AND OTHER DEVICES/EQUIPMENT ARE APPROXIMATE. COORDINATE EQUIPMENT LOCATION WITH OTHER TRADES TO PREVENT INTERFERENCE.
6. REFER TO SITE ELECTRICAL PLAN FOR OUTDOOR POWER WORK.
7. DRAWING SHOWS THE CORRECT NUMBER OF RECEPTACLE OUTLETS AND DATA/COMM JACKS. FINAL LOCATION OF DEVICES MAY CHANGE TO ACCOMODATE THE FINAL FURNITURE ARRANGEMENT.
8. REFER TO DWG E-601, SINGLE LINE DIAGRAM FOR FEEDER SIZES.
9. REFER TO DWG E-604 FOR MECHANICAL EQUIPMENT CIRCUIT SCHEDULE.
10. LOCATIONS OF RECEPTACLES ARE APPROXIMATE. CONTRACTOR SHALL PROVIDE SUPPORTING CHANNELS AS REQUIRED.
11. REFER TO DWG E-503 & E-504 FOR TYPICAL FLOOD BOX EMBEDDED CONDUIT & WIRING DIAGRAM.
12. $\ominus_C$ CEILING/WALL MOUNTED RECEPTACLE WITH DUPLEX DATA, VIDEO AND AUDIO OUTLETS - DETAIL "A" "C" DENOTES CEILING MOUNTED RECEPTACLES LOCATE PROJECTOR / RECEPTACLE AS PER MANUFACTURER RECOMMENDATION.
13. PROVIDE CIRCUIT AND WIRES FROM CEILING MOUNTED JUNCTION BOX TO THE PROJECTOR SCREEN CONTROL STATION.

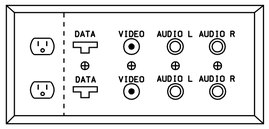

VIDEO PROJECTOR OUTLET

TYPICAL – NOT TO SCALE

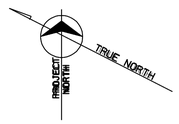

SCALE: 1:100

0 2000 4000 10000

ALL DIMENSIONS ARE IN MILLIMETERS EXCEPTED AS NOTED

US Army Corps of Engineers
New York District

Mark	Description	Date	Appr.
1	REVISED CATWALK REFERENCED FILE & ADDED VIDEO PROJECTED OUTLET	17-AUG-05	

Designed by:
Dwn by: Ckd by:
Reviewed by:
Submitted by:
Date:
Solicitation no.:
Contract no.:
Plot date: 18-AUG-2005 15:21
Plot by: e3endacl
Scale: 1:00000/1:00000
File name: S:\Mission\Military\Fort Drum\FortMOD\Electrical\90%SUBMITTAL\Sheetfiles\ForceMod57708_E-106xxx.dgn

U.S. ARMY ENGINEER DISTRICT
CORPS OF ENGINEERS
NEW YORK, NEW YORK

Size: 24x36
Scale: AS

PN 57708
FORCE MODERNIZATION EDUCATION (TRANSITIONAL FACILITY
FORT DRUM, NEW YORK

SECOND & ATTIC FLOOR PLAN – POWER & COMMUNICATIONS

Sheet reference number:
E–106

Plot Date: 18-AUG-2005 15:21
Submitted by: e3endacl
S:\fileroom\military\Fort Drum\FortMOD\Electrical\90%SUBMITTAL\Sheetfiles\ForceMod57708_E-106xxx.dgn

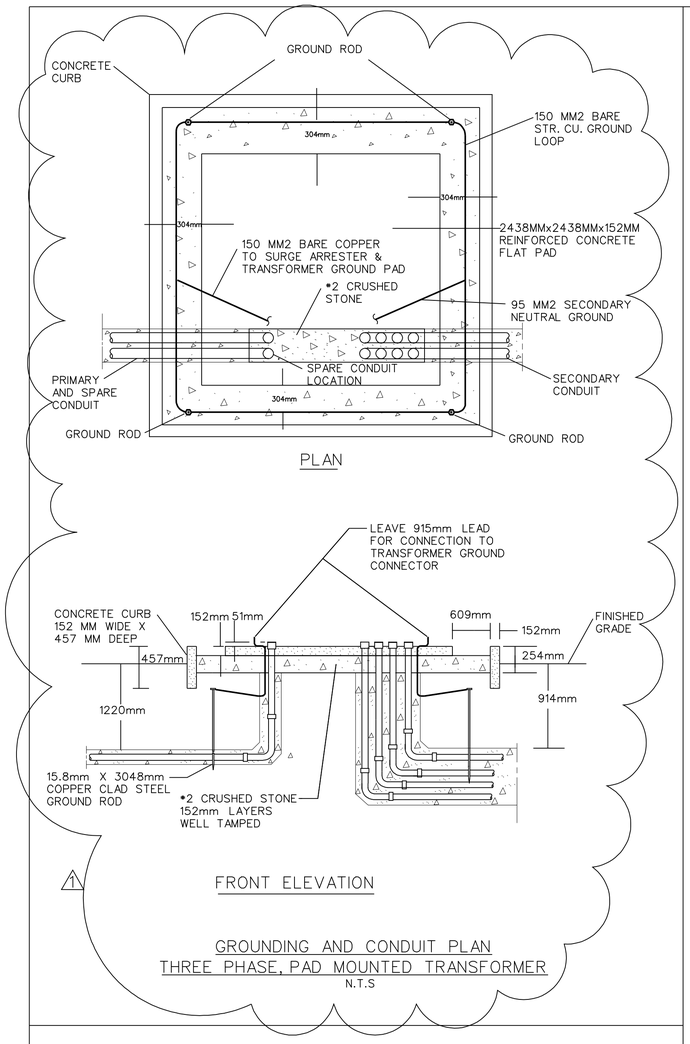

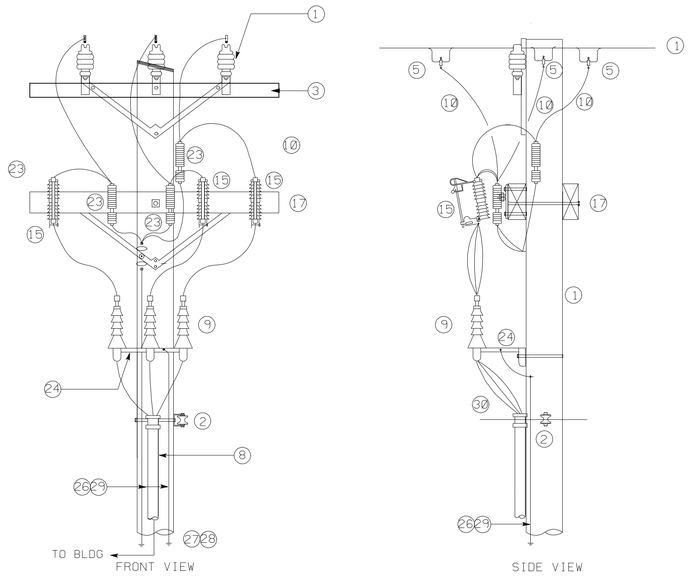

RISER POLE

N.T.S.

SCHEDULE OF POLE EQUIPMENT	
NO.	DESCRIPTION
1	(EXISTING) MV OVHD LINE/POLE
2	(EXISTING) SECONDARY CLEVIS WITH SPOOL INSULATOR
3	(EXISTING) CROSS ARM
5	STIRRUP, COMPRESSION TYPE AND HOT LINE CLAMP
8	RIGID CONDUIT, 3.05M (NOM), FROM PVC/RIGID CONVERSION.
9	1/C TERMINATION, 15/25 KV
10	PRIMARY CONDUCTOR
15	FUSED CUT OUT 15/25 KV
17	LOWER CROSS ARM
23	LIGHTNING ARRESTOR 10KV METAL OXIDE DISTRIBUTION CLASS
24	POTHEAD TRI-MOUNTING BRACKET
26	25MM2 SOLID COPPER
27	GROUND ROD
28	GROUND ROD CLAMP
29	HALF ROUND WOOD, PLASTIC OR FIBER MOLDING
30	WEATHER HEAD (NOT SHOWN)

NOTES:

1. EQUIPMENT SHOWN ARE NEW UNLESS NOTED OTHERWISE.
2. SCHEDULE SHOWN LISTS THE MAJOR ITEMS/EQUIPMENT ONLY. INCEDENTAL ITEMS AND OTHER EQUIPMENT NECESSARY FOR A COMPLETE INSTALLATION SHALL BE PROVIDED AT NO ADDITIONAL COST TO THE GOVERNMENT.
3. RISER CONDUIT (NO. 8) SHALL BE RIGID STEEL CONDUIT UP TO 3048MM ABOVE GROUND LEVEL.
4. TOP END OF RISER CONDUIT SHALL BE PACKED WITH FIRE RETARDANT INSULATION UPON COMPLETION OF CONDUCTOR INSTALLATION
5. COORDINATE IN FIELD WITH EXISTING 15KV POWER, LIGHTING, GROUNDING, COMMUNICATION AND SECURITY CABLE AND WIRES, ETC. ON THE EXISTING RISER POLE, REROUTE SAME IF REQUIRED.

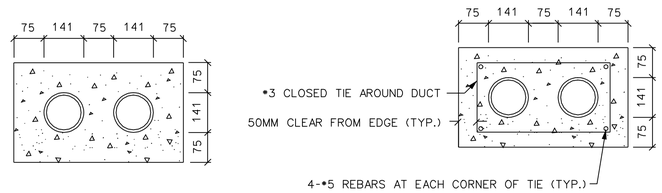

2 - 129MM CONDUIT (PVC) ENCASED DUCTBANK

N.T.S.

2 - 129MM CONDUIT (PVC) ENCASED DUCTBANK WITH REINFORCEMENT

N.T.S.

DUCTBANK NOTE:

1. PROVIDE REINFORCEMENT FOR DUCTS UNDER ROADWAYS & PARKING AREAS
2. 8-103MM CONDUIT (PVC) ENCASED DUCTBANK SIMILAR TO 4-103MM SECTIONS.

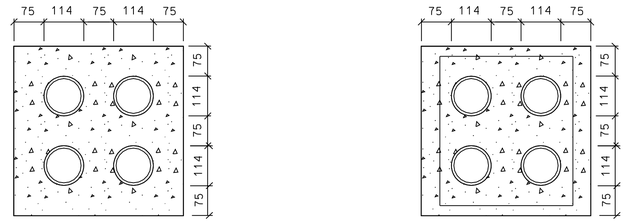

4 - 103MM CONDUIT (PVC) ENCASED DUCTBANK

N.T.S.

4 - 103MM CONDUIT (PVC) ENCASED DUCTBANK WITH REINFORCEMENT

N.T.S.

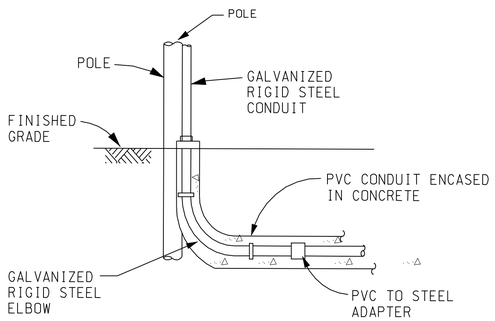

POLE-RISER DETAIL
TRANSITION FROM UNDERGROUND PVC TO POLE USING STEEL CONDUITS

NTS

NOTE:

DETAIL TYPICAL FOR UNDERGROUND CABLE TO OVERHEAD POLE TRANSITION

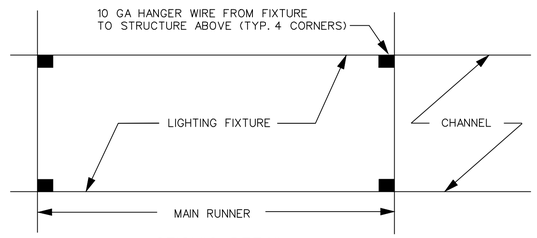

SEISMIC DETAIL
CEILING MOUNTED LIGHT FIXTURE

N.T.S.

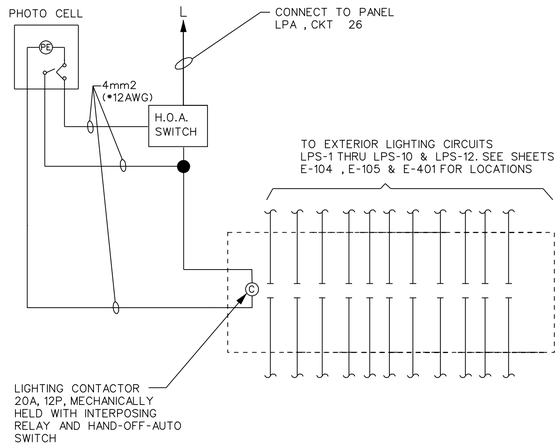

EXTERIOR LIGHTING CONTROL WIRING DIAGRAM

N.T.S.

NOTES

1. SEE PLANS AND PANEL SCHEDULES FOR CIRCUITING.

US Army Corps of Engineers
New York District

Mark	Description	Date	Appr.
1	REVISED PLAN AND FRONT ELEVATION	17-AUG-05	

U.S. ARMY ENGINEER DISTRICT
CORPS OF ENGINEERS
NEW YORK, NEW YORK

Designed by: | Date: | Size: 24x36
Dwn by: | Ckd by: | Solicitation no.:
Reviewed by: | Contract no.:
Submitted by: | Plot date: 18-AUG-2005 15:21 | Plot scale: 1 | Project file: 1200000/120000

File name: S:\Barnum Valley Fed Court Forest\Civil\Drawings\PCN\Barnum\5708_E-501.dgn

PN 5708
FORCE MODERNIZATION, EDUCATION /TRANSITIONAL FACILITY FOR FAMILIES, FORT DRUM, NY

ELECTRICAL DETAILS I

Sheet reference number:
E-501

Plot Date: 18-AUG-2005 15:21
Submitted by: e3endacl
S:\fileroom\military\Fort Drum\ForceMOD\Electrical\090%SUBMITTAL\Sheetfiles\ForceMod57708_E-501xxx.dgn

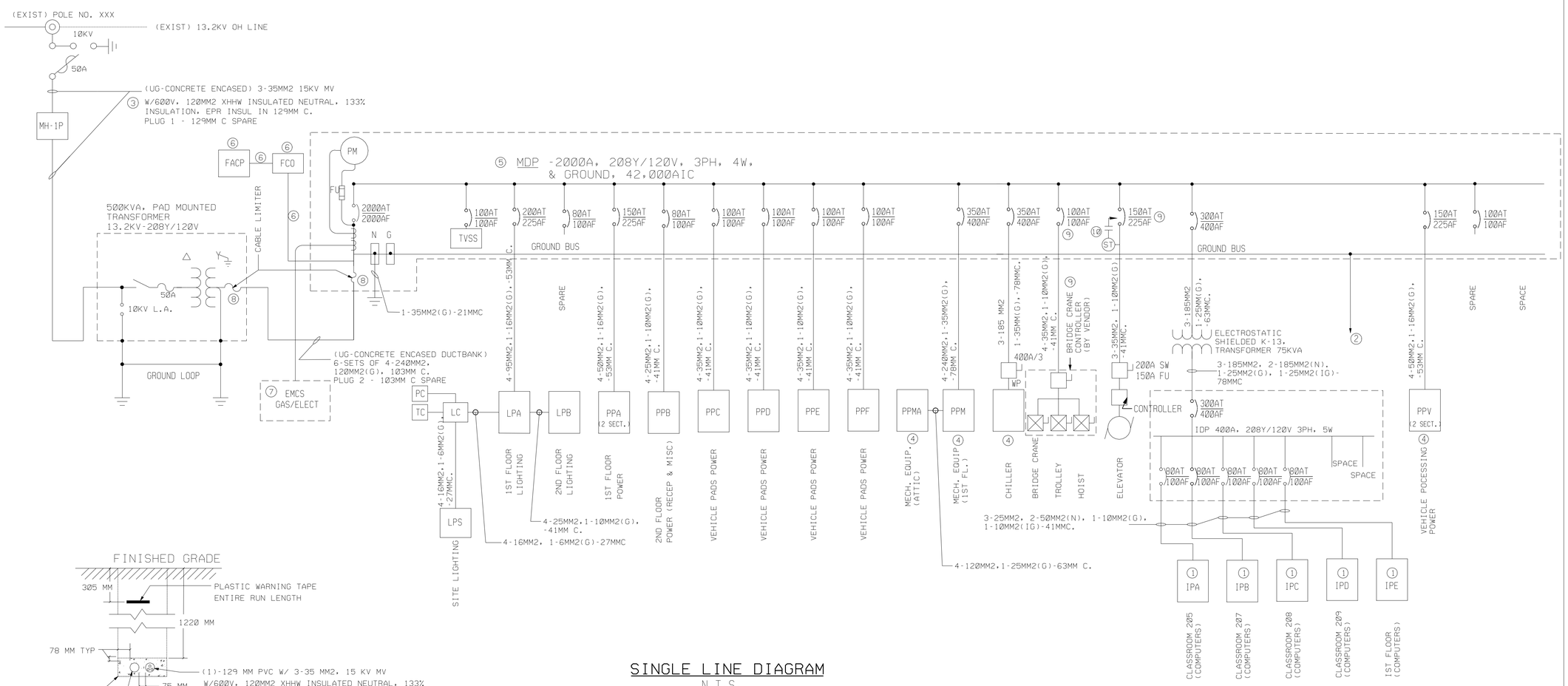

SINGLE LINE DIAGRAM

N.T.S.

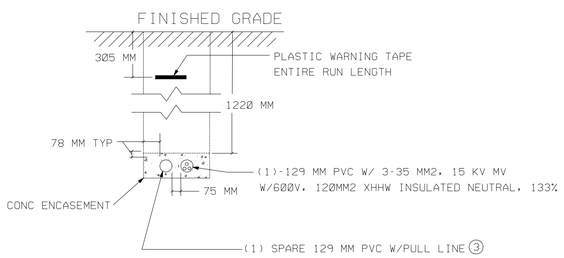

MEDIUM VOLTAGE DUCT

N.T.S.

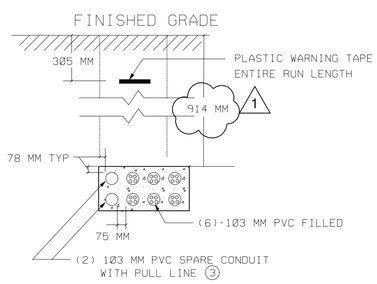

LOW VOLTAGE DUCTS

N.T.S.

GENERAL NOTES:

1. REFER TO MECHANICAL EQUIPMENT CONNECTION FOR FEEDER SIZES TO MECHANICAL EQUIPMENT.
2. REFER TO DWG E-107 & E-108 FOR ADDITIONAL GROUNDING INFORMATION AND REQUIREMENTS.
3. REFER TO PANEL SCHEDULES FOR THE CIRCUIT LOCATION OF LOADS SHOWN.
4. COMPUTER LOADS SHALL BE CONNECTED TO THE PANEL(S) SUPPORTED BY THE 'K' RATED TRANSFORMER.

KEY NOTES:

① ISOLATED GROUND BUS FROM PANELBOARDS SUPPORTED BY THE 'K' RATED TRANSFORMERS SHALL BE CONNECTED DIRECTLY TO THE GROUND BUS OF THE ELECTRICAL SERVICE SWITCHBOARD.

② SWITCHBOARD GROUND BUS SHALL BE BONDED TO THE 'STREET SIDE' OF THE INCOMING WATER SERVICE METER, AND BE CONNECTED TO BUILDING GROUND LOOP.

③ UNDERGROUND MEDIUM AND LOW VOLTAGE SERVICE DUCTS/RACEWAYS SHALL BE PROVIDED WITH SPARE DUCT(S) WITH PULL STRINGS. SPARE DUCT(S) SHALL BE CAPPED AT THE ENDS, INCLUDING IN THE HANDHOLES.

④ MOTOR STARTER PROVIDED WITH HVAC EQUIPMENT.

⑤ SWITCHBOARD SHALL BE PROVIDED WITH A NON-TAPERED COPPER BUS.

⑥ FIRE ALARM DISCONNECT SWITCH, FACP AND ITS RACEWAY SHALL BE PAINTED WITH RED ENAMEL PAINT.

⑦ PROVIDE WIRING TO DDC PANEL FOR REMOTE ELECTRIC METER MONITORING.

⑧ SECONDARY CABLES SHALL BE PROVIDED WITH LIMITERS AT THE LOW VOLTAGE SECTION OF THE OUTDOOR SERVICE TRANSFORMET AND AT THE SERVICE DISCONNECT SECTION OF THE SERVICE SWITCHBOARD IN THE ELECTRICAL ROOM.

⑨ COORDINATE WITH VENDOR'S EQUIPMENT SHOP DRAWING FOR EXACT WIRE SIZES AND BREAKER SIZE.

⑩ PROVIDE A SHUNT TRIP BREAKER FOR POWER SHUTDOWN OF ELEVATOR IN THE EVENT OF THE ACTIVATION OF SMOKE DETECTOR AND/OR HEAT DETECTOR IN THE ELEVATOR MACHINE ROOM.

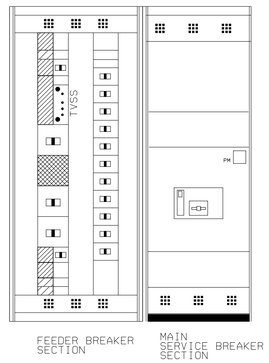

SERVICE SWITCHBOARD ELEVATION

N.T.S.

US Army Corps of Engineers
New York District

Mark	Description	Date	Appr.
1	REVISED DARKROOM	17-AUG 05	

U.S. ARMY ENGINEER DISTRICT
CORPS OF ENGINEERS
NEW YORK, NEW YORK

Designed by: | Date: | Job: 24
Dwn by: | Ckd by: | Solicitation no.:
Reviewed by: | Contract no.:
Submitted by: | Plot date: 18-AUG-2005 15:21 | File name: | Plot by: | Scale: 1:200000/1:200000

FORCE MODERNIZATION, EDUCATION, TRANSITIONAL FACILITY FORT DRUM, NEW YORK

PN 5709

SINGLE LINE DIAGRAM

Sheet reference number:

E–601

Submitted by: e3endacl
S:\fileroom\military\Fort Drum\ForceMOD\Electrical\090%SUBMITTAL\Sheetfiles\ForceMod57708_E-601xxx.dgn
Plot Date: 18-AUG-2005 15:21

TYPE: A2, A3, A4

GENERAL: PARABOLIC REFLECTOR LOUVERED FLUORESCENT LUMINAIRE

HOUSING: RECESSED DIE-FORMED MINIMUM 20 GAUGE COLD-ROLLED STEEL.

FINISH: BAKED WHITE ENAMEL, MINIMUM REFLECTANCE 85% ON IRON PHOSPHATE BASE.

REFLECTOR: HIGH REFLECTANCE GLOSS WHITE

NOM DIMENSIONS: 610MM L X 1219MM W X 152.4MM D

BALLAST: 120V - ELECTRONIC BALLAST, CERTIFIED 'A' SOUND RATING, U.L. LISTED.

LAMPS: A2 - (2L) 31 WATT T8, 75CRI, RAPID START, COOL WHITE
A3 - (3L) 31 WATT T8, 75CRI, RAPID START, COOL WHITE.
A4 - (4L) 31 WATT T8, 75CRI, RAPID START, COOL WHITE.

RECESSED PARABOLIC TROFFER
N.T.S.

TYPE: B2, B3, B4

GENERAL: SPECIFICATION GRADE ACRYLIC FLUORESCENT LUMINAIRE

HOUSING: RECESSED DIE-FORMED MINIMUM 20 GAUGE COLD-ROLLED STEEL.

FINISH: BAKED WHITE ENAMEL, MINIMUM REFLECTANCE 85% ON IRON PHOSPHATE BASE.

REFLECTOR: HIGH REFLECTANCE GLOSS WHITE

NOM DIMENSIONS: A, C - 610MM L X 1219MM W X 152.4MM D

BALLAST: 120V - ELECTRONIC BALLAST, CERTIFIED 'A' SOUND RATING, U.L. LISTED.

LAMPS: B2 - (2L) 32 WATT T8, 75CRI, RAPID START, COOL WHITE
B3 - (3L) 32 WATT T8, 75CRI, RAPID START, COOL WHITE.
B4 - (4L) 32 WATT T8, 75CRI, RAPID START, COOL WHITE.

RECESSED PRISMATIC TROFFER
N.T.S.

TYPE: C2

GENERAL: INDUSTRIAL FLUORESCENT LUMINAIRE

HOUSING: DIE-FORMED STEEL CHANNEL AND END FITTING WITH WHITE ENAMEL FINISH

FINISH: WHITE ENAMEL FINISH

REFLECTOR: SYMMETRICAL DIE-FORMED ALUMINUM WITH BAKED WHITE ENAMEL FINISH

NOM DIMENSIONS: 1244MM L X 330MM W X 175MM D

BALLAST: 120V - ELECTRONIC BALLAST, CERTIFIED 'A' SOUND RATING, U.L. LISTED.

LAMPS: (2L) 32 WATT, T8, 75CRI, RAPID START, COOL WHITE

INDUSTRIAL FLUORESCENT LUMINAIRE
N.T.S.

TYPE: D1, D2

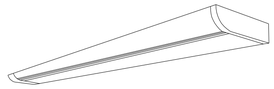

HOUSING - COLD-ROLLED, DIE-FORMED STEEL

LENS - PRISMATIC ACRYLIC LENS.

REFLECTOR - INTERNAL SILVER SPECULAR INTERVAL REFLECTORS.

FINISH - BAKED ENAMEL WHITE FINISH.

LAMP(S) - ONE (1) 32 WATT, T8 (D1)
TWO (2) 32 WATT, T8 (D2)

BALLAST - 120V ELECTRONIC.

OPTION - ON/OFF ROCKER SWITCH.

NOTE: I.E.S. TYPE DISTRIBUTION AS SPECIFIED IN LIGHTING FIXTURE SCHEDULE OR ON PLANS.

WALL MOUNTED FLUORESCENT
N.T.S.

TYPE: E

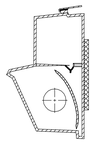

FEATURES

LAMP TYPE: 100W HPS
PROFILE: 1 LAMP
SHIELDING: GASKETED CLEAR POLYCARBONATE REFRACTOR LENS
BALLAST: HIGH POWER FACTOR TYPE (.85).

GENERAL DESCRIPTION

HOUSING: RUGGED DIE-CAST ALUMINUM

MOUNTING: FLAT/BACK WALL MOUNTED.

LENS: GASKETED, ONE-PIECE, INJECTION MOLDED, POLYCARBONATE, WITH PRISM PATTERM.

REFLECTORS: ONE-PIECE ALUMINUM

ELECTRICAL: 120 VOLTS

FINISH: DARK BRONZE POLYESTER POWDER, ELECTROSTATICALLY APPLIED.

NOM DIM: 267 MM H X 362MM W X 165MM D

LISTING: UL LISTED FOR WET LOCATION

WALL PACK LUMINAIRE
N.T.S.

TYPE: F

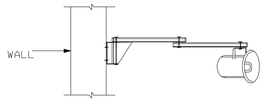

GENERAL: COMPACT FLUORESCENT DOCK LIGHT WITH INTEGAL ON-OFF SWITCH, PROVIDED WITH CORD AND PLUG

HOUSING: ZINC-PLATED STEEL HARDWARE, ALUMINUM REFLECTOR ROLLED STEEL.

FINISH: THERMOSET POWER-COATED SAFETY YELLOW FINISH

REFLECTOR: INTERNAL SPECULAR ALUMINUM REFLECTOR FOR NARROW FLOOD DISTRIBUTION

MODULAR ARMS: 41 MM SQUARE STEEL TUBE ARMS WITH 107MM IN LENGTH, JOINT ON A 107MM ARM

BALLAST: 120V - ELECTRONIC BALLAST, CERTIFIED 'A' SOUND RATING, U.L. LISTED.

LAMPS: 40 WATT COMPACT FLUORESCENT

WALL MOUNTED MODULAR ARM DOCK LIGHT
N.T.S.

TYPE: G, K, T

FEATURES

LAMP TYPE: 400W HPS (G&K)
250W HPS (T)

PROFILE: 1 LAMP
SHIELDING: 5 MM (3/16') CLEAR BOROSILICATE TEMPERED GLASS
REFLECTOR: FACETED SPECULAR ALUMINUM
BALLAST: HIGH POWER FACTOR, CORE & COIL, CWA
OTHER: TYPE IV DISTRIBUTION
'G' - SQUARE OPTICS
'K', 'T' - FORWARD THROW

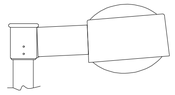

NOM. DIMENSIONS 584 MM X 584 MM X 339 MM

GENERAL DESCRIPTION

HOUSING: ONE PIECE ABS POLYMER ON CAST ALUMINUM STRUCTURE. LENS HINGED & HELD IN PLACE BY CAPTIVE SCREWS.

MOUNTING: SQ. CAST MOUNTING ARM AND ROUND POLE WITH ANCHOR TYPE BASE, ANCHOR BOLTS & MOUNTING HARDWARE.

ELECTRICAL: 120 VOLT BALLAST.

FINISH: FIXTURE MOUNTING ARM, HOUSING, DOOR FRAMES, POLE & BASE TO BE PAINTED DARK BRONZE FINISH.

POLE MOUNTED HPS CUTOFF LUMINAIRE
N.T.S.

TYPE: H1, H2

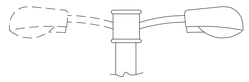

GENERAL: ENCLOSED, HEAVY-DUTY, INTEGRALLY BALLASTED HPS POLE-MOUNTED LIGHTING FIXTURE

HOUSING: DIE-CAST ALUMINUM

FINISH: BAKED ENAMEL

REFLECTOR: ANODIZED ALUMINUM REFLECTOR WITH TEMPORED PRISMATIC GLASS

BALLAST: MINUS 28.8 DEGREE C, REGULATED TYPE BALLAST.

LAMPS: H1 - (1) - 150 W HPS
H2 - (2) - 150 W HPS

POLE MOUNTED HPS LUMINAIRE
N.T.S.

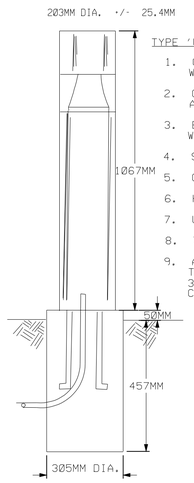

TYPE 'U' LUMINAIRE REQUIREMENTS

1. COLUMN, EXTRUDED ALUMINUM (MINIMUM 3.76MM THICK WALL) WITH MEDIUM BRONZE ANODIZED FINISH.
2. COMPLETELY GASKETED WEATHERPROOF TOP LAMP ACCESSORY PLATE.
3. EXTRUDED CLEAR ACRYLIC MINIMUM 4.76MM THICK WALL ENCLOSURE.
4. SEGMENTED SPECULAR CLEAR ALZAK REFLECTOR.
5. CLEAR ALZAK REFLECTING CONE.
6. HIGH POWER FACTOR BALLAST.
7. U.L. LISTED FOR WET LOCATIONS.
8. 70 WATT HIGH PRESSURE SODIUM LAMP.
9. ANCHOR BOLT KIT PER MANUFACTURER, BUT NOT LESS THAN TWO 12.7MM X 228.6MM LONG ANCHOR BOLTS WITH 38.1MM 'L' BEND SET IN 305MM DIA X 610MM DEEP CONCRETE BASE. TOP OF BASE 50.8" ABOVE GRADE.

EXTERIOR BOLLARD LUMINAIRE
N.T.S.

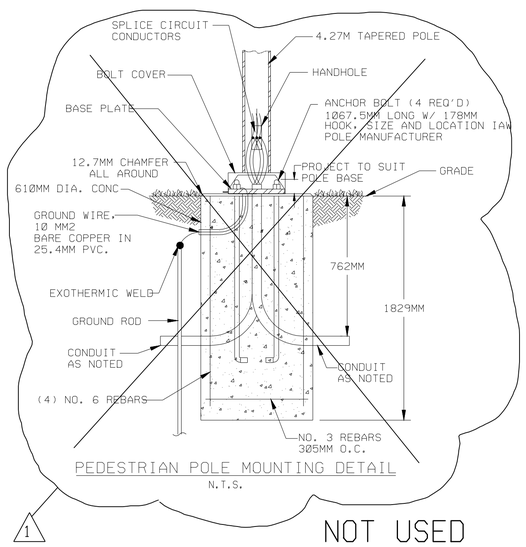

PEDESTRIAN POLE MOUNTING DETAIL
N.T.S.

NOT USED

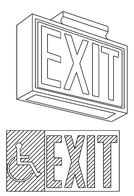

TYPE 'X' LED LUMINAIRE REQUIREMENTS

1. LETTERS SHALL BE 152.4MM TALL WITH 19MM STROKES FORMED BY A STENCIL FACE.
2. PROVIDE GREEN FIBERGLASS PANEL BEHIND STENCIL FACE.
3. PROVIDE 90-MINUTE DC POWER BACK-UP.
4. PROVIDE ILLUMINATED ARROWS AS INDICATED ON THE DRAWINGS.
5. PROVIDE SINGLE OR DOUBLE FACE AS INDICATED ON DRAWINGS.
6. PROVIDE CEILING, END WALL, BACK WALL OR PENDANT MOUNTING AS INDICATED ON DRAWINGS.
7. UNITS MOUNTED EXPOSED TO THE ENVIRONMENT SHALL HAVE A DAMP OR WET U.L. LABEL AS APPROPRIATE AND SHALL NOT BE CONSTRUCTED OF STEEL.
8. PROVIDE INTERNAL PROVISIONS FOR GROUNDING.
9. PROVIDE INTERNATIONAL SYMBOL OF ACCESS ON SIGN, ACCORDINGLY.

ILLUMINATED EXIT SIGN
N.T.S.

TYPE: 'L'

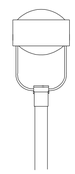

FEATURES

LAMP TYPE: 150W HPS
PROFILE: 1 LAMP
SHIELDING: CLEAR TEMPERED GLASS
BALLAST: HIGH POWER FACTOR, CORE & COIL, CWA
NOM. DIMENSIONS: 20" DIA. X 20" H

GENERAL DESCRIPTION

HOUSING: ONE PIECE HEAVY GAUGE SPUN ALUMINUM WITH NO VISIBLE SEAMS OR WELD BEADS WITH SOLID TOP

MOUNTING: YOKE/POLE MOUNTED, 4.57 M (TOP OF LUMINAIRE) MAX

REFLECTORS: SEGMENTED HIGHLY REFLECTIVE SPECULAR ALUMINUM

ELECTRICAL: 120 VOLT BALLAST

FINISH: PAINTED BRONZE FINISH

LOW HEIGHT PEDESTRIAN POLE
N.T.S.

US Army Corps of Engineers
New York District

Mark	Description	Date	Appr.
1	DELETED PEDESTRIAN POLE MOUNTING DETAIL	17 AUG 05	

Designed by: | Date: | File: 3708-E605.dgn
Dwn by: | Ckd by: | Solicitation no.:
Reviewed by: | Contract no.:
Submitted by: | File size: 18-AUG-2005 15:21 | Plot date: 18-AUG-2005 | Plot scale: 1.000000:1000000

U.S. ARMY ENGINEER DISTRICT
CORPS OF ENGINEERS
NEW YORK, NEW YORK

File name: S:\Design-Military\Fort Drum\FortDrum\ECO\Submittals\Sheetfiles\ElectricalLighting & Office.dgn

PN 3708
FORCE MODERNIZATION - EDUCATION - TRANSITIONAL FACILITY
FORT DRUM, NEW YORK

LIGHTING FIXTURE DETAILS

Sheet reference number:
E–605

Submitted by: e3endacl
S:\filer\oom\military\Fort Drum\ForceMOD\Electrical\90%SUBMITTAL\Sheetfiles\ForceMod57708_E-605xxx.dgn
Plot Date: 18-AUG-2005 15:21