ARTHUR KILL CHANNEL
SALT MARSH RESTORATION PROJECT
JOSEPH MEDWICK PARK
RAHWAY RIVER, CARTERET, NJ

CONSTRUCTION CONTRACT NO.
W912DS-05-B-0018

U.S. ARMY ENGINEER DISTRICT, NEW YORK
CORPS OF ENGINEERS
NEW YORK, NEW YORK

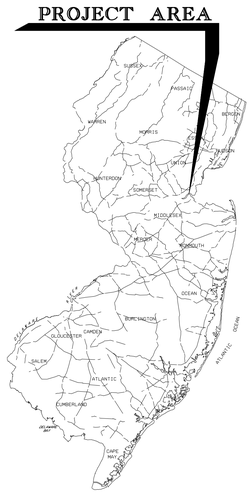

VICINITY MAP
N.T.S.

SITE LOCATION MAP
N.T.S.

DRAWING INDEX

SHEET NO.	SHEET REFERENCE NUMBER:	TITLE
1	CC-MED-00	COVER SHEET AND DRAWING INDEX
2	CC-MED-01	GENERAL NOTES
3	CC-MED-02	EXISTING CONDITIONS PLAN
4	CC-MED-03	CONSTRUCTION PLAN
5	CC-MED-04	SOIL EROSION AND SEDIMENT CONTROL PLAN
6	CC-MED-05	NON-HAZARDOUS BERM EXCAVATION PLAN
7	CC-MED-06	SELECT FILL PLAN BERM AREA ONLY
8	CC-MED-07	FINAL GRADING PLAN
9	CC-MED-08	CROSS-SECTIONS
10	CC-MED-09	PLANTING PLAN
11	CC-MED-10	OBSERVATION DECK LAYOUT AND DETAILS
12	CC-MED-11	OBSERVATION DECK LAYOUT AND DETAILS II
13	CC-MED-12	TYPICAL DETAILS

US Army Corps of Engineers
New York District

Symbol | Description | Date | Appr.

U.S. ARMY ENGINEER DISTRICT
CORPS OF ENGINEERS
NEW YORK, NEW YORK

Designed by: BETHANY BEARMORE
Dwn by: BB
Ckd by: S.W.
Reviewed by: ANGELO TROTTO
Submitted by:
Date: 15 MAY 2005
Size: Rev.
Drawing file no.: CC-MED-00
Drawing code:
Plot date: 22-AUG-2005 14:37
Plot by: Bethany Bearmore
Scale: NA

File name: E:\Rahway\Design Document Report\Drawings\Final Drawings\CC-MED-00.dgn

ARTHUR KILL CHANNEL - HOWLAND HOOK
MARINE TERMINAL 40/41' DEEPENING MITIGATION
JOSEPH MEDWICK PARK, CARTERET, NEW JERSEY

COVER SHEET AND DRAWING INDEX

Sheet reference number
CC-MED-00
SHEET 1 of 13

Submitted by: e3eehbmb Plot Date: 22-AUG-2005 14:37
E:\Rahway\Design Document Report\Drawings\Final Drawings\CC-MED-00.dgn

GENERAL NOTES

1. THE CONTRACTOR SHALL PERFORM ALL WORK NECESSARY TO PROVIDE FOR MAINTENANCE AND PROTECTION OF VEHICULAR TRAFFIC DURING THE ENTIRE CONSTRUCTION PERIOD. THE CONTRACTOR SHALL COORDINATE WORK WITH THE CORPS CONTRACTING OFFICER REPRESENTATIVE (COR) ON SITE.

2. NO AREAS UNDER CONSTRUCTION SHALL BE LEFT ACCESSIBLE TO PEDESTRIANS AT ANY TIME. THE CONTRACTOR SHALL TAKE ALL NECESSARY STEPS, AS REQUESTED OR APPROVED BY THE COR ON SITE.

3. THE CONTRACTOR SHALL BE RESPONSIBLE FOR LOCATING AND VERIFYING THE PRESENCE AND LOCATION OF ALL UTILITIES BELOW GRADE AND OVERHEAD AND SURFACE FEATURES PRIOR TO THE START OF WORK.

4. THE CONTRACTOR SHALL EXERCISE CARE DURING ALL CONSTRUCTION OPERATIONS TO PROTECT AND AVOID DAMAGING ALL EXISTING PLANT MATERIAL THAT IS TO REMAIN ON SITE, SURFACE FEATURES AND UNDERGROUND AND OVERHEAD UTILITIES THAT ARE SCHEDULED TO REMAIN. THIS INCLUDES BUT IS NOT LIMITED TO EXISTING WALLS, ENTRANCE GATES, EXISTING ELECTRICAL, SEWER, WATER, GAS AND TELEPHONE LINES, EXISTING DRAINAGE STRUCTURES AND WATER VALVES, EXISTING VAULT STRUCTURES, PERIMETER CURBS AND PAVEMENTS. ANY DAMAGE CAUSED AS A RESULT OF THE CONTRACTOR'S WORK SHALL BE REPAIRED AT THE CONTRACTOR'S EXPENSE, TO THE SATISFACTION OF THE COR ON SITE.

5. PRIOR TO COMMENCEMENT OF WORK (48 HOURS), THE CONTRACTOR SHALL CONTACT THE MIDDLESEX COUNTY PARKS SUPERVISING PLANNER WILLIAM VAN NEST, AT PHONE (732) 745-3900 OR (732) 745-3064 TO RECORD THE CONDITION OF EXISTING UTILITIES AND SURFACE FEATURES AND SUBMIT REPORT TO COR ON SITE.

6. FOR CONSTRUCTION ACCESS AND EGRESS TO THE SITE, THE CONTRACTOR SHALL USE POST BOULEVARD AND THE EXISTING PARKING LOT ENTRANCE ONLY. ALL DAMAGE TO PAVEMENT, GROUNDS AND VEGETATION TO REMAIN CAUSED BY VEHICULAR ACCESS TO THE SITE SHALL BE REPAIRED AT THE CONTRACTOR'S EXPENSE TO THE SATISFACTION OF THE COR ON SITE.

7. THIS PROJECT IS LOCATED IN A TIDAL ZONE. IT IS THE CONTRACTOR'S RESPONSIBILITY TO ANALYZE THE TIDAL INFORMATION AT THE SITE AND THE POTENTIAL IMPACTS ON THE SITE WORK. ALL SITE PREPARATION WORK INCLUDING SEDIMENT AND EROSION CONTROL, TEMPORARY DIKE SYSTEMS AND ACCESS CORRIDORS MUST BE INSTALLED AND PROPERLY MAINTAINED TO FACILITATE THE PROPOSED WORK. ANY MODIFICATIONS TO THE SITE WORK SYSTEMS PROPOSED BY THE CONTRACTOR MUST BE APPROVED BY THE COR ON SITE.

8. SURFACE FEATURES INCLUDING BUT NOT LIMITED TO SIDEWALKS, CURB CUTS, DRIVE WAYS, UTILITY POLES AND SIGNS ARE GENERALLY NOT SHOWN ON THE CONTRCAT DRAWINGS. THE CONTRACTOR IS RESPONSIBLE FOR VERIFYING ALL SURFACE FEATURES AS NECESSARY PRIOR TO COMMENCING CONSTRUCTION ACTIVITIES.

9. THE CONTRACTOR SHALL BE RESPONSIBLE FOR LOCATING ALL UTILITIES PRIOR TO COMMENCING WORK OR ORDERING MATERIALS.

10. THE CONTRACTOR SHALL NOT DISCHARGE SOIL, CONSTRUCTION DEBRIS OR WASTE MATERIALS INTO THE RIVER, WATERWAY OR WETLANDS.

DATUM INFORMATION AND SITE BENCHMARKS

1. COORDINATES ARE EXPRESSED IN FEET AND REFER TO THE NEW JERSEY STATE PLANE COORDINATE SYSTEM 1983. ELEVATIONS ARE EXPRESSED IN FEET AND REFER TO THE NATIONAL GEODETIC VERTICAL DATUM 1929 (NGVD 29).

2. THE PRIMARY SITE BENCHMARK IS LOCATED IN THE NW FOUNDATION FOOTING OF THE HIGH VOLTAGE LINE STEEL TOWER LOCATED NEXT TO AND WEST OF THE SOUTHBOUND LANES OF THE NJ TURNPIKE AT AN ELEVATION OF 13.17 NGVD 29. IT CAN BE ACCESSED VIA A DIRT ROAD EXTENDING FROM THE EAST END OF JOSEPH MEDWICK PARK (NOT SHOWN ON CONTRACT DRAWINGS).

3. A SECONDARY BECHMARK IS LOCATED AS A DRILL HOLE IN AN EXISTING CURB ON THE EAST SIDE OF POST BOULEVARD (LOCATED ON CONTRACT DRAWINGS) AT AN ELEVATION OF 11.55' NGVD 29.

TIDAL INFORMATION

1. TIDAL INFORMATION IS REFERENCED TO THE NATIONAL OCEAN SERVICE TIDAL BENCH MARK - RAHWAY RIVER - STATION 8531077. THE SURVEY DISK IS STAMPED "1077 C 1975" IN THE NW FOUNDATION FOOTING OF THE HIGH VOLTAGE LINE STEEL TOWER LOCATED NEXT TO AND WEST OF THE SOUTHBOUND LANES OF THE NJ TURNPIKE.

2. DISK ELEVATION IS 13.17FT NGVD 29

3. TIDAL CONDITIONS AT THE SITE ARE
MEAN TIDE LEVEL (MTL) = 0.61FT
MEAN HIGH WATER (MHW) = 3.29FT
MEAN HIGHER HIGH WATER (MHHW) = 3.62FT
MEAN LOW WATER (MLW) = -2.08FT
MEAN LOWER LOW WATER (MLLW) = -2.30FT

US Army Corps of Engineers
New York District

Symbol	Description	Date	Appr.

U.S. ARMY ENGINEER DISTRICT
CORPS OF ENGINEERS
NEW YORK, NEW YORK

Designed by: BETHANY BEARMORE
Date: 15 MAY 2005
Size:
Rev.
Dwn by: BB
Ckd by: BB
Drawing file no.: CC-MED-01
Reviewed by: ANGELO TROTTO
Drawing code:
Submitted by:
Plot date: 22-AUG-2005 14:37
Plot scale: Refer to drawing
Scale: NA
File name: E:\Pathway\Design Document\Report\Drawings\Final Drawings\CC-MED-01.dgn

ARTHUR KILL CHANNEL – HOWLAND HOOK
MARINE TERMINAL 40'NT DEEPENING MITIGATION
JOSEPH MEDWICK PARK, CARTERET, NEW JERSEY

GENERAL NOTES

Sheet reference number
CC–MED–01
Sheet 2 of 13

Submitted by: eBentsen
Plot Date: 22-AUG-2005 14:37
E:\Pathway\Design Document Report\Drawings\Final Drawings\CC-MED-01.dgn

N

LEGEND:

- EXISTING SPOT ELEVATIONS
- EXISTING MAJOR CONTOUR LINES
- EXISTING MINOR CONTOUR LINES
- APPROXIMATE EXISTING TREE LINE
- EXISTING EDGE OF GRASS LINE
- SITE BOUNDARY
- BENCHMARK LOCATION
- 13.84 ACRES OF EXISTING PHRAGMITES VEGETATION
- 1.4 ACRES OF EXISTING SPARTINA ALTERNIFLORA VEGETAION
- 1.5 ACRES OF EXISTING SPARTINA PATENS VEGETATION
- 1.6 ACRES OF EXISTING WRACK AND DEBRIS
- 1.3 ACRES OF BERM

50 25 0 50 100FT
SCALE: 1"= 50'

US Army Corps of Engineers
New York District

Symbol	Description	Date	App

Designed by: BETHANY BEARMORE		Date: 15 MAY 2008	Size: Rev:
Dwn by: BB	Ckd by: SW	Drawing file no: CC-MED-02	
Reviewed by: ANGELO TROTTO		Drawing code:	
Submitted by:		Plot date: 22-AUG-2008 14:37 Plotted by: Bethany Bearmore Scale: 50	

File name: E:\Dwing\Design Document Report\Drawings\Final Drawings\CC-MED-02.dgn

U.S. ARMY ENGINEER DISTRICT
CONTRACT NO. DACW51-03-D-0003
NEW YORK, NEW YORK

ARTHUR KILL CHANNEL - HOWLAND HOOK
MARINE TERMINAL 40/41 DEEPENING MITIGATION
JOSEPH MEDWICK PARK, CARTERET, NEW JERSEY

EXISTING CONDITIONS PLAN

Sheet reference number

CC-MED-02

Sheet 3 of 13

Submitted by: eAdmin
Submission Type: Document Report
Plot Date: 22-AUG-2008 14:37
Plotted by: Bethany Bearmore
Drawing: E:\Dwing\Design Document Report\Drawings\CC-MED-02.dgn

LEGEND:

- EXISTING MAJOR CONTOUR LINES
- EXISTING MINOR CONTOUR LINES
- APPROXIMATE EXISTING TREE LINE
- EXISTING EDGE OF GRASS LINE
- SITE BOUNDARY/LIMIT OF SITEWORK
- BENCHMARK LOCATION
- CONSTRUCTION FENCE
- LIMITS OF EXCAVATION - TO BE DETERMINED IN FIELD
- SILT FENCE
- EXISTING SPARTINA ALTERNIFLORA TO REMAIN AND BE PROTECTED
- EXISTING SPARTINA PATENS TO REMAIN AND BE PROTECTED

NOTES:

1. CONSTRUCTION ACCESS AND EGRESS TO THE SITE IS FROM THE NJ TURNPIKE, ROUTE 602 AND POST BOULEVARD. POST BOULEVARD ENTERS THE SOUTHERN END OF THE PARK FROM ROUTE 602. ALL DAMAGE TO PAVEMENT, GROUNDS AND VEGETATION THAT IS DESIGNATED TO REMAIN CAUSED BY THE VEHICULAR ACCESS TO THE SITE SHALL BE REPAIRED AT THE CONTRACTOR'S EXPENSE AND TO THE SATISFACTION OF THE COR.

2. PRIOR TO COMMENCEMENT OF ANY WORK THE CONTRACTOR SHALL ERECT THE CONSTRUCTION FENCE AND CONSTRUCTION SIGN AS DIRECTED BY THE COR. NO WORK SHALL COMMENCE UNTIL ALL CONSTRUCTION FENCING AND SEDIMENT CONTROL MEASURES ARE IN PLACE. FENCING AND SEDIMENT CONTROL MEASURES SHALL BE PROVIDED AND MAINTAINED AS NECESSARY THROUGHOUT THE CONSTRUCTION PERIOD.

3. THE CONTRACTOR IS RESPONSIBLE FOR THE PROTECTION OF TREES AND EXISTING VEGETATION THAT IS DESIGNATED TO REMAIN ON SITE DURING CONSTRUCTION. EXTREME CARE SHALL BE TAKEN TO PROTECT THE ROOT SYSTEMS OF EXISTING TREES BY CONTROLLING THE ACTIVITIES OCCURRING BENEATH THE DRIP LINE OF THE TREES. IF VEHICLES MUST DRIVE BENEATH THE DRIP LINE A 6 INCH LAYER OF WOOD CHIPS IS TO BE PLACED AND MAINTAINED BY THE CONTRACTOR AT ITS OWN EXPENSE.

4. ANY VEGETATION DESIGNATED TO REMAIN ON-SITE SHALL BE LOCATED PRIOR TO WORK COMMENCING ON-SITE BY THE PROJECT BIOLOGIST. VEGETATION SHALL BE PROTECTED USING SNOW FENCING TO BE INSTALLED BY THE CONTRACTOR. LOCATIONS OF EXISTING VEGETATION TO REMAIN ON DRAWING ARE APPROXIMATE.

5. ALL DEMOLISHED, EXCAVATED AND REMOVED MATERIALS NOT SCHEDULED TO BE SALVAGED OR RE-USED ON SITE SHALL BE REMOVED AND DISPOSED OF OFF-SITE ACCORDING TO SPECIFICATION SECTIONS 02231, 02227 AND 02310. ALL MATERIALS EXCAVATED ON-SITE ARE TO BE STORED IN THE DESIGNATED AREAS UNTIL TAKEN OFF-SITE. ANY EXCAVATED SOIL REMAINING ONSITE OVERNIGHT SHALL BE COVERED ACCORDING TO SPECIFICATION 02227 AND 02310.

6. HAUL ROADS AND STAGING/STOCKPILE AREAS ARE DEPICTED ON THIS DRAWING. HAUL ROADS IN THE MARSH AREA SHALL BE DEVELOPED BY THE CONTRACTOR AT THE START OF THE PROJECT.

7. THE CONTRACTOR SHALL COMPLY WITH ALL STATE OF NEW JERSEY AND MIDDLESEX COUNTY LEGAL LIMITS OF HAULING ON SURFACE ROADS. MIDDLESEX PARKS AND UTILITY REQUIREMENTS SHALL BE MET FOR THE ACCESS ROUTE IN AND OUT OF THE WORK SITE.

8. WITHIN THE SITE BOUNDARY/LIMIT OF SITE WORK, WHERE NO EXCAVATION IS OCCURING, INVASIVE VEGETATION SHALL BE REMOVED BY HERBICIDE APPLICATION AS DESCRIBED IN SPECIFICATION 02231 OR MECHANICALLY AS DESCRIBED IN SPECIFICATION 02231.

9. THE CONTRACTOR SHALL MAINTAIN A DRY WORK ENVIRONMENT TO THE GREATEST DEGREE POSSIBLE. TEMPORARY DIKES PLUGGING THE 2 EXISTING CREEKS SHALL REMAIN IN PLACE DURING THE EXCAVATION AND FINAL GRADING PERIOD. TEMPORARY DIKES SHALL BE REMOVED ONCE THE FINAL GRADE HAS BEEN ACHEIVED AND EROSION CONTROL FABRIC HAS BEEN INSTALLED.

CONSTRUCTION FENCE COORDINATES

POINT	EASTING	NORTHING	DISTANCE	BEARING
A	564,763.6	643,908.9		
B	564,830.2	643,837.9	124	S 61° 22' 34.4" E
C	564,901.5	643,778.0	60	S 10 42' 48.2" E
D	564,969.9	643,680.1	112	S 3° 44' 7.6" E
E	565,001.1	643,714.8	40	N 51° 39' 8.1" E
F	565,046.5	643,724.4	46	N 78° 3' 21.8" E
G	565,110.5	643,711.0	65	S 78° 25' 18.5" E
H	565,201.6	643,686.9	81	S 68° 14' 16.5" E
I	565,220.5	643,686.2	19	S 1° 54' 1.4" E
J	565,253.7	643,656.2	58	S 49 21' 21.4" E
K	565,302.1	643,600.5	87	S 40 32' 48.9" E
L	565,368.9	643,565.9	84	S 52 37' 11.2" E
M	565,388.1	643,518.1	54	S 58 33' 33.5" E
N	565,458.4	643,516.2	70	S 87 42' 15.0" E
O	565,608.7	643,521.0	167	S 89 42' 17.0" E
P	565,608.7	643,621.8	34	S 0 16' 8.4" E
Q	565,854.1	643,625.7	248	N 89° 3' 56.3" E

STAGING/STOCKPILE AREA 1 COORDINATES

POINT	EASTING	NORTHING
A	565,468.0	643,585.4
B	565,615.2	643,649.8
C	565,612.7	643,525.0
D	565,445.0	643,525.0

STAGING/STOCKPILE AREA 2 COORDINATES

POINT	EASTING	NORTHING
A	565,469.4	643,780.7
B	565,660.5	643,740.1
C	565,774.4	643,436.1
D	565,924.6	643,450.7
E	565,649.4	643,450.7

CONSTRUCTION PHASING NOTES:

A CONSTRUCTION PHASING PLAN HAS BEEN DEVELOPED TO EVALUATE THE FEASIBILITY PHASING PLAN FOR THE PLANNED WORK. THE CONTRACTOR SHALL PREPARE THEIR OWN PHASING PLAN BASED ON THEIR PLANNED EQUIPMENT, MATERIALS AND PROCEDURES FOR PERFORMING THE WORK.

PHASE I:
1. CONSTRUCT STABILIZED CONSTRUCTION ENTRANCE, STOCKPILING AND STAGING AREA AND FENCE AND GATES.

2. INSTALL SESC MEASURES INCLUDING TURBIDITY CURTAIN.

3. BEGIN CLEARING AND GRUBBING.

4. CONSTRUCT HAUL ROADS AND TEMPORARY DIKES.

5. BEGIN EXCAVATION AND REMOVAL OF MATERIALS ON THE SOUTH SIDE OF THE BERM. DISPOSE OF ACCORDINGLY.

6. EXCAVATE AND REMOVE BERM MATERIALS. DISPOSE OF ACCORDINGLY.

PHASE II:
1. ACHIEVE SUB-GARDE IN BERM AREA AS SHOWN ON PLAN CC-MED-05.

2. PLACE SELECT FILL TO ACHIEVE FINISHED GRADE IN BERM AREA.

PHASE III:
1. ACHIEVE FINISHED GRADE AS SHOWN ON PLAN CC-MED-06.

2. REMOVE ALL HAUL ROADS SIMULTANEOUSLY WITH THE ACHIEVEMENT OF FINISHED GRADE.

3. INSTALL EROSION CONTROL BLANKET

PHASE IV:
1. PLANT VEGETATION AS SHOWN ON PLAN CC-MED-09.

2. INSTALL WATERFOWL EXCLUSION SYSTEM AS SHOWN ON PLAN CC-MED-13.

3. REMOVE ANY REMAINING CONSTRUCTION DEBRIS.

4. REMOVE SILT FENCE AND TURBIDITY CURTAIN AFTER ALL CONSTRUCTION HAS BEEN COMPLETE.

PHASE V:
1. ONCE PERMANENT VEGETATION HAS BEEN ESTABLISHED REMOVE WATERFOWL EXCLUSION SYSTEM.

2. POST CONSTRUCTION MAINTENANCE AND MONITORING.

50 25 0 50 100FT
SCALE: 1"= 50'

US Army Corps of Engineers
New York District

Symbol	Description	Date	Appr.

U.S. ARMY ENGINEER DISTRICT
CORPS OF ENGINEERS
NEW YORK, NEW YORK

Designed by: BETHANY BEARMORE
Dwn by: BB
Ckd by: SW
Reviewed by: ANGELO TRITTO
Submitted by:
Date: 15 MAY 2005
Scale:
Rev:
Drawing file no.: CC-MED-03
Drawing code:
Plot date: 22-AUG-2005 14:37
Plot by: Bethany Bearmore
Size: 22x34
File name: E:\Rahway\Design Document Report\Drawings\Final Drawings\CC-MED-03.dgn

ARTHUR KILL CHANNEL - HOWLAND HOOK
MARINE TERMINAL 40'x4' DEEPENING MITIGATION
JOSEPH MEDWICK PARK, CARTERET, NEW JERSEY

CONSTRUCTION PLAN

Sheet reference number
CC-MED-03
Sheet 4 of 13

Submitted by: e3ernomb
Submitted by: E:\Rahway\Design Document Report\Drawings\Final Drawings\CC-MED-03.dgn
Plot Date: 22-AUG-2005 14:37

LEGEND:

- EXISTING CONTOUR LINES – MAJOR
- EXISTING CONTOUR LINES – MINOR
- TURBIDITY CURTAIN
- SILT FENCE
- EXISTING EDGE OF GRASS LINE
- SITE BOUNDARY/LIIT OF SITE WORK
- CONSTRUCTION FENCE
- BENCHMARK LOCATION

SOIL EROSION AND SEDIMENT CONTROL NOTES

1. ALL SOIL EROSION AND SEDIMENT CONTROL PRACTICES SHALL BE INSTALLED PRIOR TO ANY CONSTRUCTION AND MAINTAINED THROUGHOUT CONSTRUCTION.

2. ALL SOIL EROSION AND SEDIMENT CONTROL PRACTICES ON THIS PLAN SHEET SHALL BE CONSTRUCTED IN ACCORDANCE WITH THE "NEW JERSEY STANDARDS FOR SOIL EROSION AND SEDIMENT CONTROL".

3. SILT FENCES SHALL REMAIN IN PLACE UNTIL THE MONITORING PERIOD IS COMPLETE.

4. ANY DAMAGE INCURRED BY EROSION SHALL BE RECTIFIED IMMEDIATELY.

5. ALL SOIL EROSION AND SEDIMENT CONTROL DEVICES SHALL BE INSPECTED AND MAINTAINED PERIODICALLY.

SEQUENCE OF CONSTRUCTION FOR SOIL EROSION AND SEDIMENT CONTROL

1. INSTALL STABILIZED CONSTRUCTION ENTRANCE. ANTI-TRACKING PAD. SILT FENCE. SOIL EROSION AND SEDIMENT CONTROL MEASURES.

2. INSTALL EROSION CONTROL MEASURES TO THE WORK AREA AS REQUIRED FOR CONSTRUCTION. EXCAVATE. FILL AND GRADE AS REQUIRED.

3. PROCEED WITH CONSTRUCTION OF PROJECT.

4. UPON COMPLETION OF CONSTRUCTION AND STABILIZATION OF VEGETATED AREAS. REMOVE SOIL EROSION AND SEDIMENT CONTROL MEASURES.

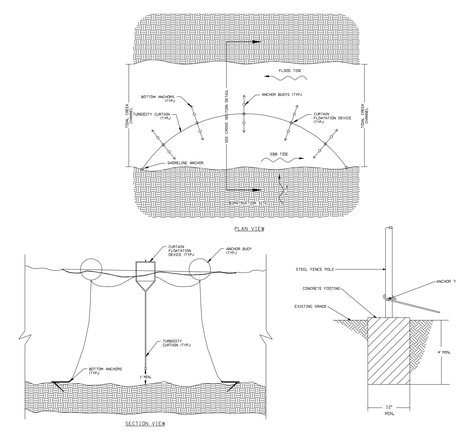

TURBIDITY CURTAIN NOTES:

1. BARRIER MATERIAL WILL BE A BRIGHT YELLOW/ORANGE POLYETHYLENE SHEET 10 MIL. ANY SEAMS SHALL BE EITHER VULCANIZED OR SEWN AND SHALL DEVELOP THE FULL STRENGTH OF THE FABRIC.

2. BOTTOM ANCHORS, ANCHOR BUOYS AND CURTAIN FLOATATION DEVICES SHALL BE INSTALLED AT A MAXIMUM SPAN OF 100 FEET BETWEEN LOCATIONS.

3. STANDARD SMALL CRAFT WARNING BUOYS SHALL BE LOCATED ALONG THE BARRIER AT A MINIMUM OF 100 FOOT INTERVALS.

FLOATING TURBIDITY BARRIER

NOT TO SCALE

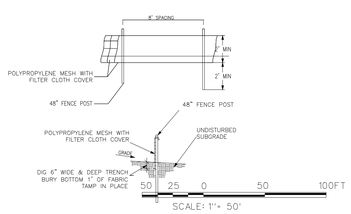

SILT FENCE

NOT TO SCALE

US Army Corps of Engineers
New York District

Symbol	Description	Date	Appr.

Designed by: BETHANY BEARMORE
Date: 15 MAY 2006
Size: | Rev.:
Dwn by: BB
Ckd by: SWK
Drawing file no.: CC-MED-04
Reviewed by: ANGELO TROTTO
Drawing code:
Submitted by:
Plot date: 22-AUG-2005 14:38
Plot scale: 1=Delivery Scale
Size: 8/1
File name: E:\Rahway\Design Document\Report\Drawings\Final Drawings\CC-MED-04.dgn

U.S. ARMY ENGINEER DISTRICT
CONSTRUCTION DIVISION
NEW YORK NEW YORK

ARTHUR KILL CHANNEL – HOWLAND HOOK MARINE TERMINAL 400AT DEEPENING MITIGATION
JOSEPH MEDWICK PARK, CARTERET, NEW JERSEY

SOIL EROSION AND SEDIMENT CONTROL PLAN

Sheet reference number

CC–MED–04

Sheet 5 of 13

Submitted by: eBerthab
Plot Date: 22-AUG-2005 14:38
E:\Rahway\Design Document Report\Drawings\Final Drawings\CC-MED-04.dgn

LEGEND:

- 5 — EXISTING MAJOR CONTOUR LINES
- 3 - - EXISTING MINOR CONTOUR LINES
- 0.2' NON-HAZARDOUS AREA EXCAVATION CONTOUR LINES
- EG EXISTING EDGE OF GRASS LINE
- SITE BOUNDARY/LIMITS OF WORK
- CONSTRUCTION FENCE
- BENCHMARK LOCATION
- LIMITS OF EXCAVATION - TO BE DERTERMINED IN FIELD
- NON-HAZARDOUS 2.0FT EXTRA EXCAVATION AREA (BERM AREA)

NOTES:

1. EXCAVATION OF NON-HAZARDOUS MATERIAL FROM THE BERM AREA CONSIST OF AN EXTRA 2.0FT OF EXCAVATION IN ACCORDANCE WITH SPECIFICATION 02227.
2. THE FINAL GRADING PLAN, LOCATED ON SHEET 8, DEPICTS THE FINAL GRADES AND DIRECTION OF SLOPES FOR THE NON-HAZARDOUS AREA (BERM AREA) AND EXCAVATION OF THE REMAINDER OF THE SITE
3. ALIGNMENTS ARE LOCATED ON SHEET 9.
4. NON-HAZARDOUS MATERIAL EXCAVATED SHALL BE STOCKPILED SEPARATLEY FROM OTHER EXCAVATED MATERIAL FORM THE PROJECT SITE

N 644000

50 25 0 50 100FT
SCALE: 1"= 50'

US Army Corps of Engineers
New York District

Symbol	Description	Date	Appr.

U.S. ARMY ENGINEER DISTRICT
CORPS OF ENGINEERS
NEW YORK, NEW YORK

Designed by: BETHANY BEARMORE
Dwn by: BB
Ckd by: SW
Reviewed by: ANGELO TROTTO
Submitted by:
Date: 15 MAY 2005
Drawing file no.: CC-MED-05
Drawing code:
Plot date: 22-AUG-2005 14:38
Plot by: Bethany Bearmore
Scale: 50:1
Size:
Rev.:
File name: E:\Rahway\Design Document Report\Drawings\Final Drawings\CC-MED-05.dgn

ARTHUR KILL CHANNEL - HOWLAND HOOK
MARINE TERMINAL 40'/41' DEEPENING MITIGATION
JOSEPH MEDWICK PARK, CARTERET, NEW JERSEY

NON-HAZARDOUS
BERM EXCAVATION PLAN

Sheet reference number
CC-MED-05
Sheet 6 of 13

Submitted by: e3enhomb Plot Date: 22-AUG-2005 14:38
E:\Rahway\Design Document Report\Drawings\Final Drawings\CC-MED-05.dgn

LEGEND:

- 5 — EXISTING MAJOR CONTOUR LINES
- 3 — EXISTING MINOR CONTOUR LINES
- 2.0 — FINAL TOPOGRAPHIC CONTOUR LINES
- EG — EXISTING EDGE OF GRASS LINE
- SITE BOUNDARY/LIMITS OF WORK
- CONSTRUCTION FENCE
- BENCHMARK LOCATION
- LIMITS OF EXCAVATION - TO BE DERTERMINED IN FIELD
- LIMITS OF SELECT FILL - 2.0FT

NOTES:

1. THE SELECT FILL PLAN INCLUDES 2.0FT OF SELECT FILL OVER THE DESIGNATED BERM AREA, IN ACCORDANCE WITH SPECIFICATION 02140A.
2. ALIGNMENTS ARE LOCATED ON SHEET 9.
3. REFER TO SHEET 8 FOR FINAL GRADING PLAN.

50 25 0 50 100FT
SCALE: 1"= 50'

US Army Corps of Engineers
New York District

Symbol	Description	Date	Appr.

U.S. ARMY ENGINEER DISTRICT
CORPS OF ENGINEERS
NEW YORK, NEW YORK

Designed by: BETHANY BEARMORE
Dwn by: BB
Ckd by: S.W.
Reviewed by: ANGELO TROTTO
Submitted by:
Date: 15 MAY 2005
Size:
Rev.
Drawing file no.: CC-MED-06
Drawing code:
Plot date: 22-AUG-2005 14:28
Plot by: Bethany Bearmore
Scale: 50:1

File name: E:\Rahway\Design Document\Report\Drawings\Final Drawings\CC-MED-06.dgn

ARTHUR KILL CHANNEL - HOWLAND HOOK
MARINE TERMINAL 40/41' DEEPENING MITIGATION
JOSEPH MEDWICK PARK, CARTERET, NEW JERSEY

SELECT FILL PLAN
BERM AREA ONLY

Sheet reference number
CC-MED-06
Sheet 7 of 13

Submitted by: e3enhamb
Plot Date: 22-AUG-2005 14:38
E:\Rahway\Design Document Report\Drawings\Final Drawings\CC-MED-06.dgn

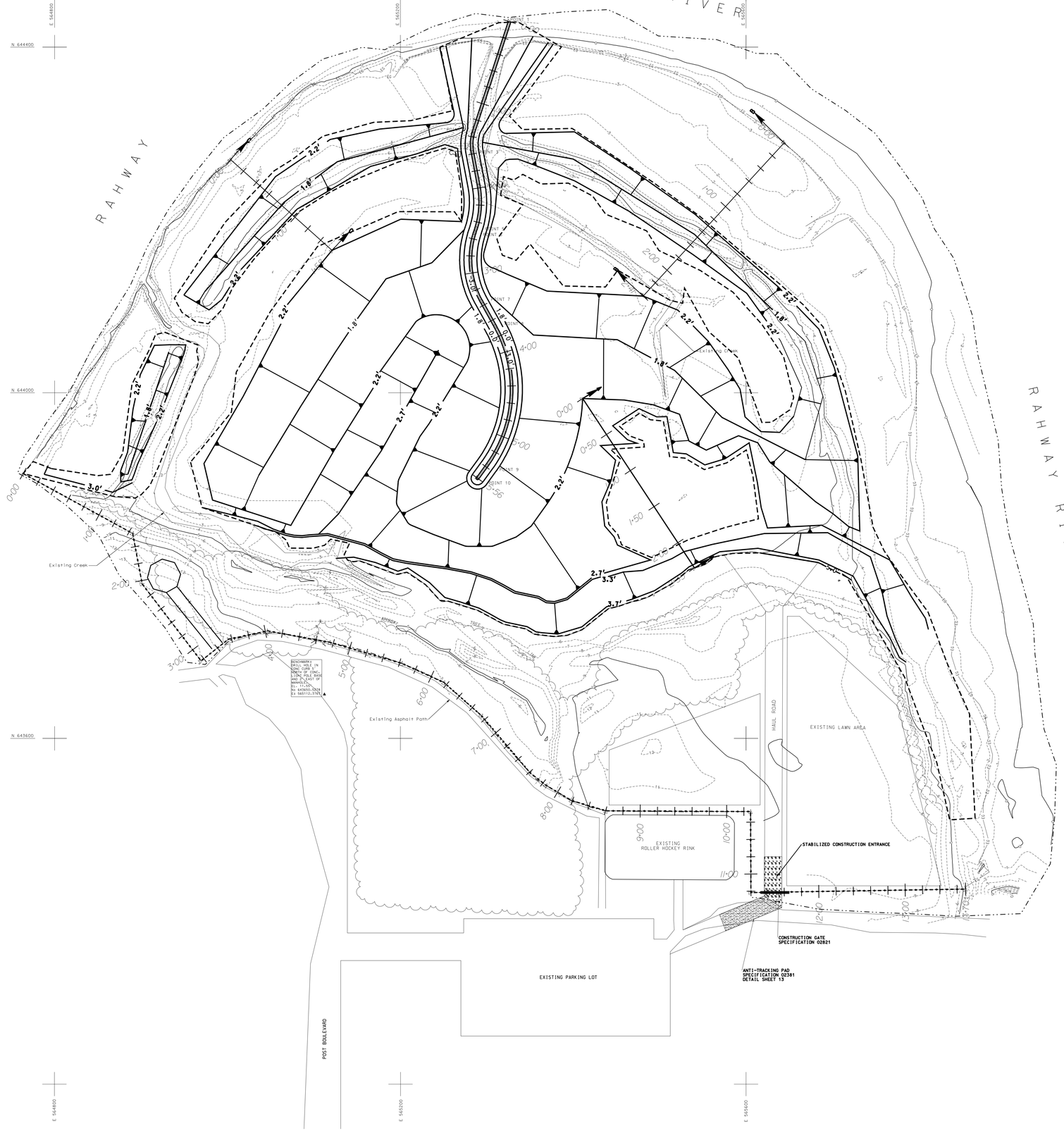

LEGEND:

- 5 — EXISTING MAJOR CONTOUR LINES
- 3 - - EXISTING MINOR CONTOUR LINES
- 2.0 - FINAL TOPOGRAPHIC CONTOUR LINES
- EG — EXISTING EDGE OF GRASS LINE
- SITE BOUNDARY/LIMITS OF WORK
- CONSTRUCTION FENCE
- BENCHMARK LOCATION
- LIMITS OF EXCAVATION – TO BE DERTERMINED IN FIELD
- DIRECTION OF SLOPE

NOTES:

1. CONTRACTOR IS RESPONSIBLE FOR PROVIDING UNIFORM GRADING AS SHOWN ON THIS PLAN TO WITHIN A TOLERANCE OF +/- 0.10'. EXCEPT FOR AREAS TO BE PRESERVED, WHICH SHALL NOT BE DISTURBED, OR AS OTHERWISE SHOWN. THE FINAL GRADING INCLUDES 2.0FT OF SELECT FILL OVER THE DESIGNATED BERM AREA.

2. HIGH POINTS AND LOW POINTS ON FINAL GRADING PLAN SHALL BE MET GRADUALLY AND GRADED TO DRAIN AS INDICATED ON THIS PLAN SHEET.

4. WHERE GRADING IS TO BE DONE, THE INTENT IS TO COMPLETE CONSTRUCTION WITH MINIMUM DISTURBANCE TO EXISTING TREES AND VEGETATION DESIGNATED TO REMAIN. THE CONTRACTOR SHALL EXERCISE CARE WHEN OPERATING THE UTILITY VEHICLES AND MECHANICAL EQUIPMENT. THE CONTRACTOR SHALL WORK WITHIN THE LIMITS OF WORK AS MUCH AS POSSIBLE. THE CONTRACTOR SHALL REPAIR ANY RUTS AND POTENTIAL EROSION AREAS CREATED THROUGHOUT THE CONSTRUCTION PERIOD TO THE SATISFACTION OF THE COR. 644000

5. LOCATIONS OF EXISTING VEGETATION (VEGETATION THAT IS TO REMAIN ON-SITE) ARE APPROXIMATE AND SHALL BE FLAGGED BY THE PROJECT BIOLOGIST IN THE FIELD WITH THE CONTRACTOR PRIOR TO WORK COMMENCING.

6. IN AREAS WHERE THE EXISTING GRADE IS SLOPED TO MEET THE FINAL GRADE A MAXIMUM SLOPE OF 2V:1H SHALL NOT BE EXCEEDED.

7. CHANNEL BOTTOM WIDTH IS 3.0' AND TOP OF BANK WIDTH IS 15.0'.

8. ALIGNMENTS ARE LOCATED ON SHEET 9.

9. THE CONTRACTOR SHALL MAKE EVERY EFFORT TO MAINTAIN A DRY WORK ENVIRONMENT TO FACILITATE THE ACHIVEMENT OF SUB AND FINISHED GRADES.

10. EROSION CONTROL BLANKET TO BE INSTALLED AFTER FINAL GRADES HAVE BEEN MET ON ALL AREAS THAT HAVE BEEN EXCAVATED.

TYPICAL CHANNEL CROSS-SECTION

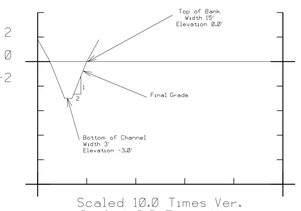

Scaled 10.0 Times Ver.
Scaled 2.0 Times Hor.

THALWIG ALIGNMENT COORDINATES		
POINT	NORTHING	EASTING
1	644429	565326
2	644303	565285
3	644278	565283
4	644239	565290
5	644190	565287
6	644185	565285
7	644105	565293
8	644076	565309
9	643915	565300
10	643901	565289

CHANNEL CURVE ALIGNMENTS	
POINT	RADIUS
2 TO 3	50.0'
4 TO 5	100.0'
6 TO 7	100.0'
8 TO 9	150.0'0

50 25 0 50 100FT
SCALE: 1"= 50'

US Army Corps of Engineers
New York District

Symbol	Description	Date	App.

Designed by: BETHANY BISHOPE
Date: 18 August 2005
Size:
Rev.:
Dwn by: BB
Chk by: S.W.
Drawing by no.: CC-MED-07
Reviewed by: ANGELO TROTTO
Drawing code:
Submitted by:
Plot date: 22-AUG-2005 14:38
Plot for: Bethany Bishopce
Scale: 40'1
File name: E:\Rahway\Design Document Report\Drawings\Final Drawings\CC-MED-07.dgn

U.S. ARMY ENGINEER DISTRICT
CORPS OF ENGINEERS
NEW YORK, NEW YORK

ARTHUR KILL CHANNEL – HOWLAND HOOK
MARINE TERMINAL 40'41' DEEPENING MITIGATION
JOSEPH MEDWICK PARK, CARTERET, NEW JERSEY

FINAL GRADING PLAN

Sheet reference number
CC–MED–07
Sheet 8 of 13

Submitted by: e3ernbmb
(pw:\rahway\Design Document Report\Drawings\Final Drawings\CC-MED-07.dgn)
Plot Date: 22-AUG-2005 14:38

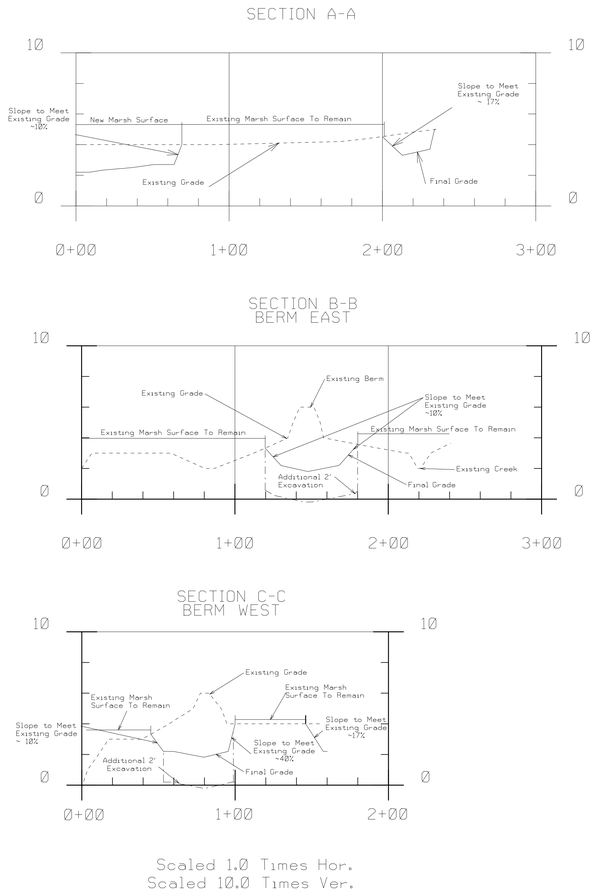

Scaled 1.0 Times Hor.
Scaled 10.0 Times Ver.

CROSS-SECTION ALONG THALWEG
LOOKING DOWNSTREAM INTO PROJECT SITE
STA.1+33 TO STA.5+56

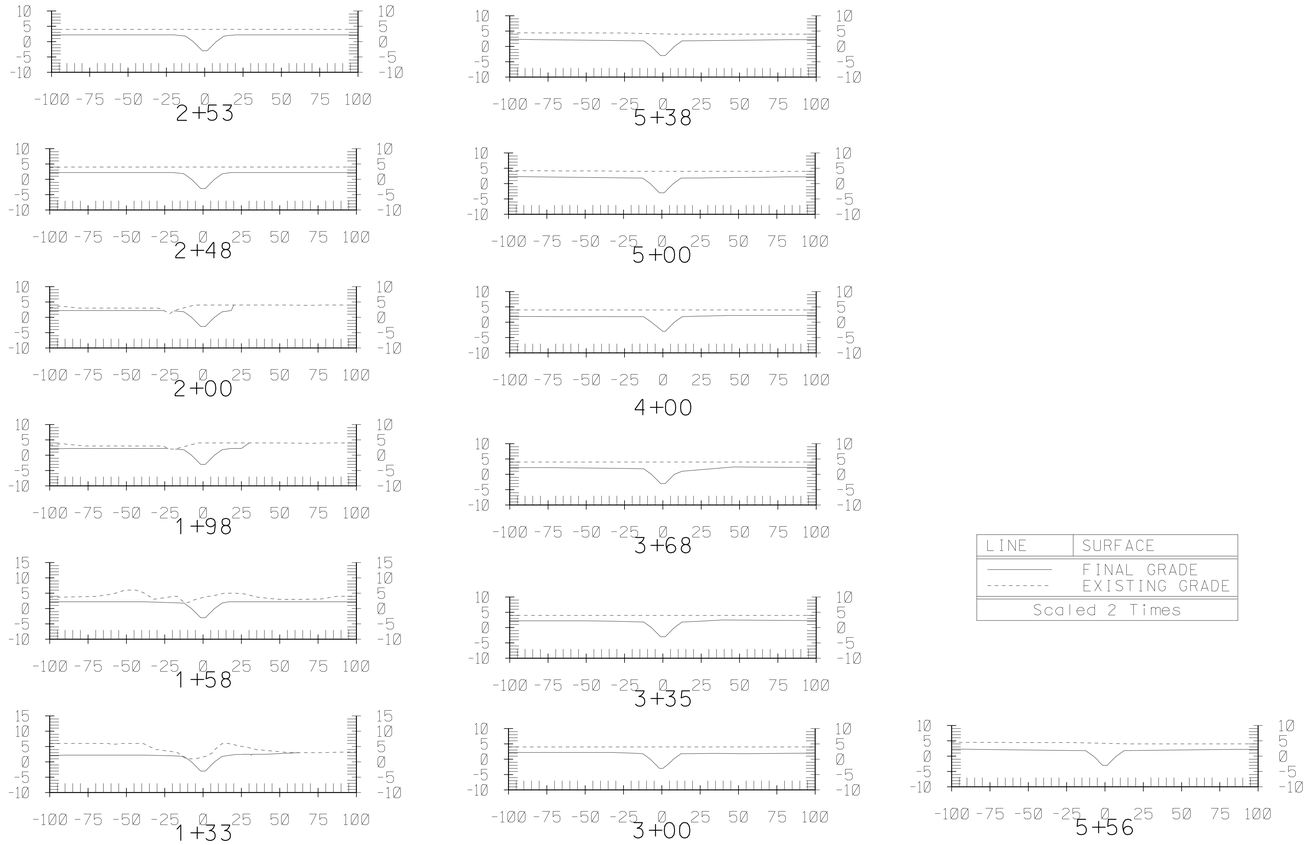

LINE	SURFACE
———	FINAL GRADE
- - - - -	EXISTING GRADE
Scaled 2 Times	

40 20 0 40 80FT
SCALE: 1"= 40'

US Army Corps of Engineers
New York District

Designed by: BETHANY BEARMORE
Dwn by: BB
Ckd by: S.W.
Reviewed by: ANGELO TRIOTTO
Submitted by:
Date: 15 MAY 2005
Size: Rev.
Drawing file no.: CC-MED-08
Drawing code:
Plot date: 22-AUG-2005 14:38
Plot by: Bethany Bearmore
Scale: AS SHOWN
File name: E:\Rahway\Design Document\Report\Drawings\Final Drawings\CC-MED-08.dgn

U.S. ARMY ENGINEER DISTRICT
CORPS OF ENGINEERS
NEW YORK, NEW YORK

ARTHUR KILL CHANNEL - HOWLAND HOOK
MARINE TERMINAL 40/41' DEEPENING MITIGATION
JOSEPH MEDWICK PARK, CARTERET, NEW JERSEY

CROSS-SECTIONS

Sheet reference number
CC-MED-08
Sheet 9 of 13

Submitted by: e3enbomb
Plot Date: 22-AUG-2005 14:38
E:\Rahway\Design Document Report\Drawings\Final Drawings\CC-MED-08.dgn

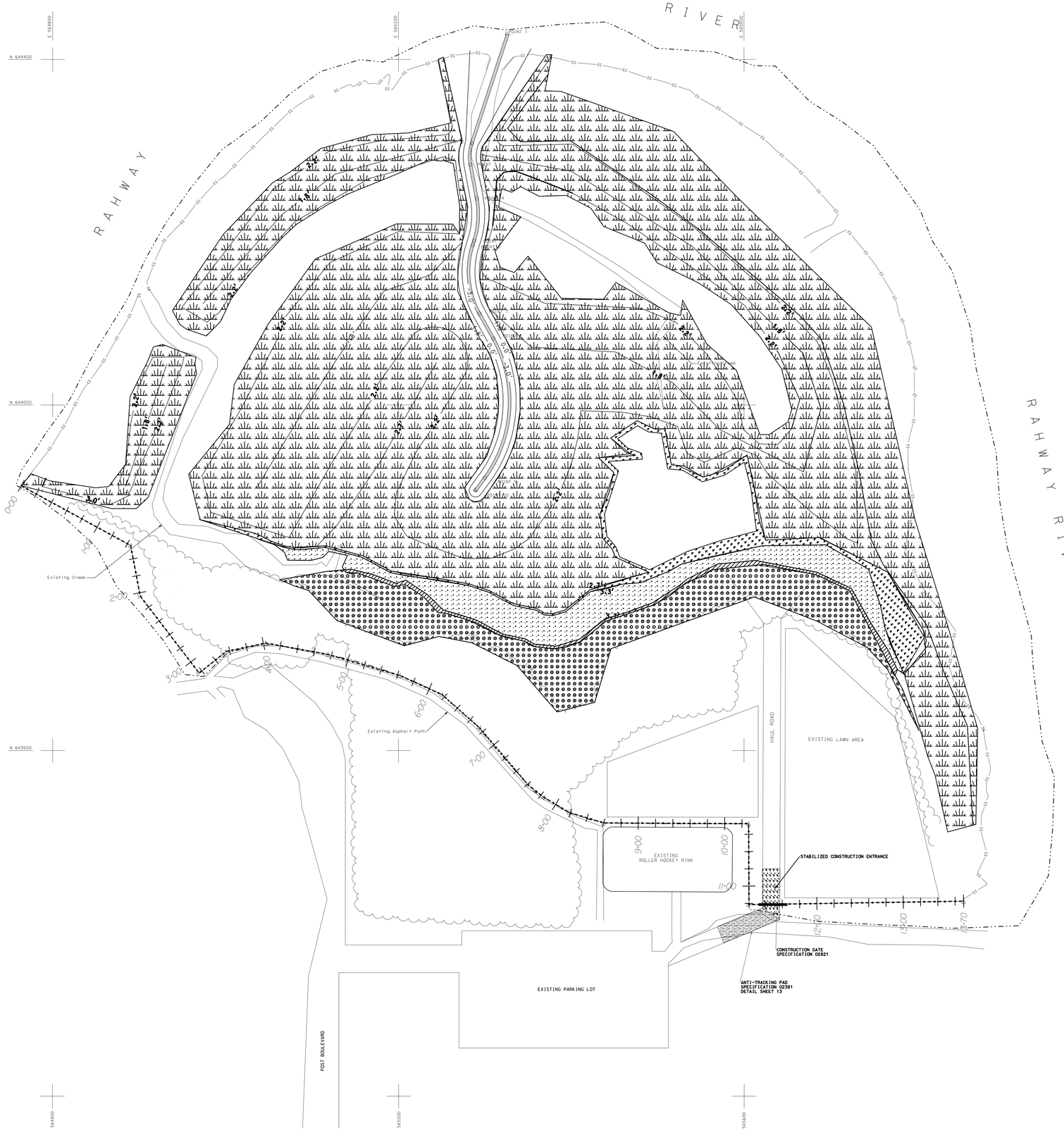

LEGEND:

- 2.0 — FINAL TOPOGRAPHIC CONTOUR LINES
- EG — EXISTING EDGE OF GRASS LINE
- EXISTING TREE LINE
- SITE BOUNDARY
- CONSTRUCTION FENCE
- AREAS OF LOW MARSH
- AREAS OF LOW MARSH/HIGH MARSH TRANSITION
- AREAS OF SUPRATIDAL
- AREAS OF SUPRATIDAL TO UPLAND TRANSITION
- UPLAND

VEGETATION ZONES

PLANT COMMUNITY	ELEVATION
LOW MARSH	1.8-2.7 FT
LOW MARSH/HIGH MARSH TRANSITION	2.7-3.3 FT
SUPRATIDAL ZONE	3.3-3.7 FT
SUPRATIDAL TO UPLAND TRANSITION	3.7-5.0 FT
UPLAND	ABOVE 5.0 FT

PLANT SCHEDULE

PLANT COMMUNITY	PLANT NAME	STOCK TYPE	MINIMUM SIZE	SPACING	ELEVATION	QUANTITY
LOW MARSH	SPARTINA ALTERNIFLORA	2" PLUG	12" HEIGHT	18" O.C.	1.8-2.7 FT	265,000
LOW MARSH/HIGH MARSH TRANSITION	SPARTINA ALTERNIFLORA	2" PLUG	12" HEIGHT	18" O.C.	2.7-3.3 FT	600
LOW MARSH/HIGH MARSH TRANSITION	SPARTINA PATENS	2" PLUG	12" HEIGHT	18" O.C.	2.7-3.3 FT	400
SUPRATIDAL ZONE	IVA FRUTESCENS	CONTAINER/B&B	18-24" HEIGHT	4' O.C.	3.3-3.7 FT	1,250
SUPRATIDAL ZONE	SPARTINA PATENS	2" PLUG	12" HEIGHT	18" O.C.	3.3-3.7 FT	2,000
SUPRATIDAL TO UPLAND TRANSITION	DISTICHLIS SPICATA	2" PLUG	12" HEIGHT	2' O.C.	3.7-5.0 FT	500
SUPRATIDAL TO UPLAND TRANSITION	JUNCUS GERARDII	2" PLUG	12" HEIGHT	2' O.C.	3.7-5.0 FT	250
SUPRATIDAL TO UPLAND TRANSITION	BACCHARIS HALMIFOLOA	CONTAINER/B&B	18-24" HEIGHT	8' O.C.	3.7-5.0 FT	30
UPLAND	PRUNUS MARITIMA	CONTAINER/B&B	2.5-3.0 FT	6' O.C.	ABOVE 5.0 FT	100
UPLAND	MYRICA PENSYLVANICA	CONTAINER/B&B	2.5-3.0 FT	6' O.C.	ABOVE 5.0 FT	100
UPLAND	RHUS COPALLINA	B&B	4.0-5.0 FT	10' O.C.	ABOVE 5.0 FT	100

NOTES:

1. SEE PLANT SCHEDULE TABLE FOR SPACING REQUIREMENTS FOR PLUGS AND/OR CONTAINERS.

2. PLANTING SHALL BE DONE BETWEEN APRIL 1 AND MAY 31. REPLANTING OF LIMITED AREAS MAY BE UNDERTAKEN AT OTHER TIMES SUBJECT TO APPROVAL BY COR.

3. LOCATIONS OF EXISTING VEGETATION ARE APPROXIMATE AND SHALL BE FLAGGED BY THE PROJECT BIOLOGIST IN THE FIELD WITH THE CONTRACTOR PRIOR TO WORK COMMENCING.

4. PLUGS AND/OR CONTAINERS SHALL BE PLANTED IN THE AREAS DESIGNATED ON THIS PLAN.

5. A WATERFOWL EXCLUSION SYSTEM SHALL BE INSTALLED OVER ENTIRE SITE IN ACCORDANCE WITH SPECIFICATION 01561.

6. THE WATERFOWL EXCLUSION SYSTEM SHALL BE MAINTAINED FOR A PERIOD OF SIX (6) MONTHS FOLLOWING COMPLETION OF INITIAL PLANTING. AT THE END OF THAT PERIOD, THE PROJECT BIOLOGIST SHALL DETERMINE WHETHER THE SYSTEM SHALL SHALL REMAIN IN PLACE OR BE REMOVED.

50 25 0 50 100FT

SCALE: 1"= 50'

US Army Corps of Engineers
New York District

Symbol	Description	Date	Appr.

U.S. ARMY ENGINEER DISTRICT
CORPS OF ENGINEERS
NEW YORK, NEW YORK

Designed by: BETHANY BEARMORE
Date: 15 MAY 2006
Size
Rev.
Dwn by: BB
Ckd by: SRK
Drawing file no.: CC-MED-09
Reviewed by: ANGELO TROTTO
Drawing code:
Submitted by:
Plot date: 22-AUG-2006 14:38
Plot by: Bethany Bearmore
Scale: 301
File name: E:\Rahway\Design Document Report\Drawings\Final Drawings\CC-MED-09.dgn

ARTHUR KILL CHANNEL – HOWLAND HOOK
MARINE TERMINAL 40'/41' DEEPENING MITIGATION
JOSEPH MEDWICK PARK, CARTERET, NEW JERSEY

PLANTING PLAN

Sheet reference number

CC–MED–09

Sheet 10 of 13

Submitted by: eBenbach
Plot Date: 22-AUG-2006 14:38
E:\Rahway\Design Document Report\Drawings\Final Drawings\CC-MED-09.dgn

ALL WORK SHALL CONFORM TO ALL APPLICABLE REQUIREMENTS OF US ARMY CORPS OF ENGINEERS REGULATIONS, LOCAL GOVERNING CODES, STATE CONSTRUCTION AND ENERGY CONSERVATION CODES, HEALTH CODES, FIRE DEPARTMENT REGULATIONS, OSHA CODES AND THE NEW JERSEY BUILDING CODE.

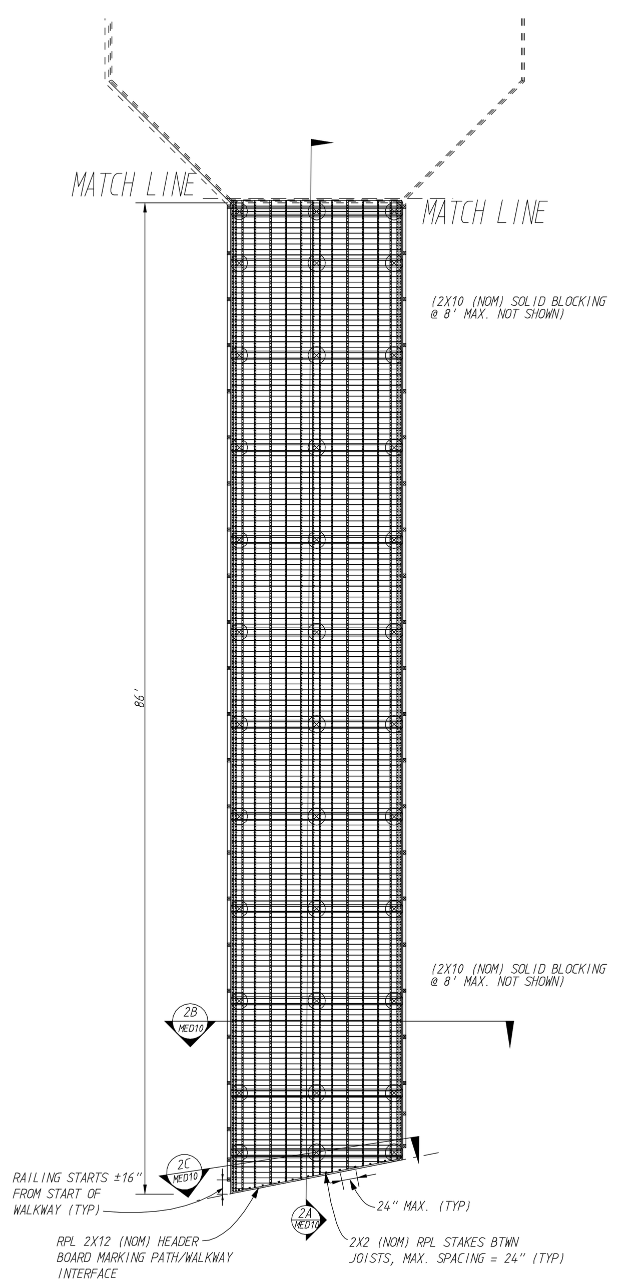

WALKWAY PLAN — 2 / MED10

SCALE: $\frac{3}{32}$" = 1'

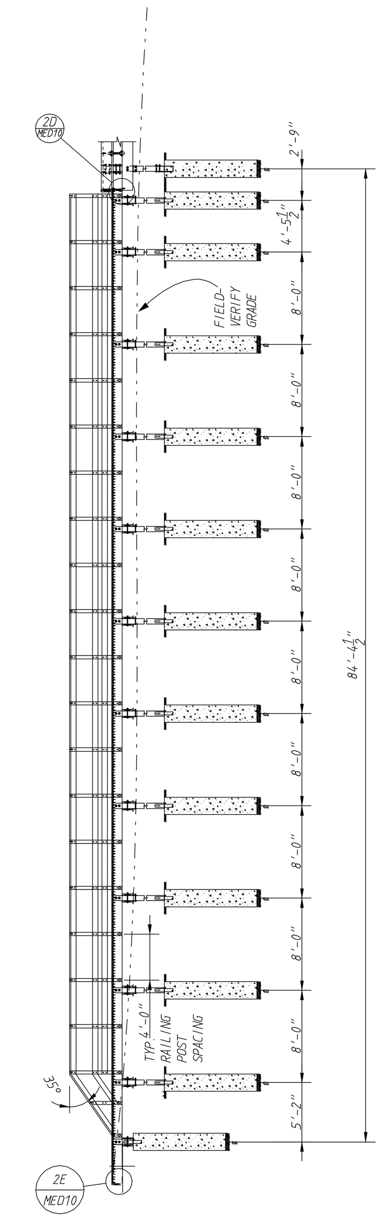

WALKWAY SIDE SECTION — 2A / MED10

SCALE: $\frac{3}{32}$" = 1'

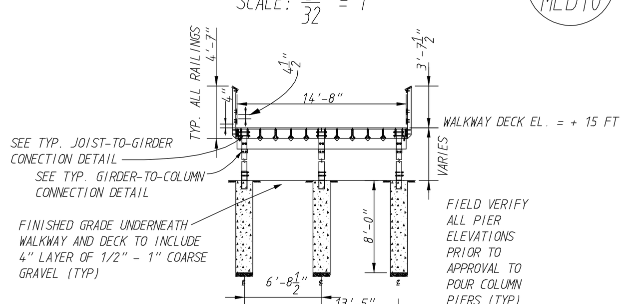

TYP. WALKWAY SECTION — 2B / MED10

SCALE: $\frac{3}{32}$" = 1'

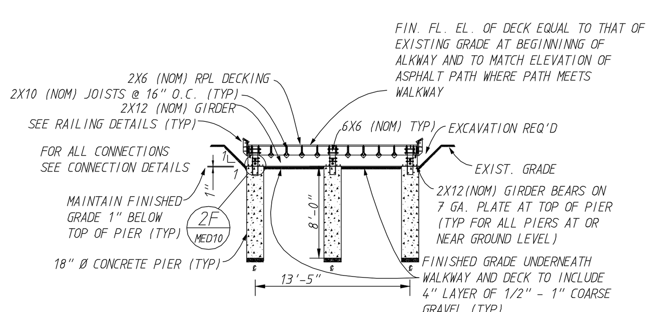

SECTION AT BEGINNING OF WALKWAY — 2C / MED10

SCALE: $\frac{3}{32}$" = 1'

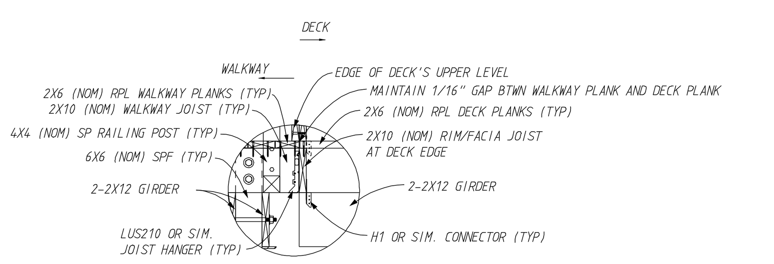

WALKWAY-DECK TRANSITION — 2D / MED10

SCALE: NOT TO SCALE

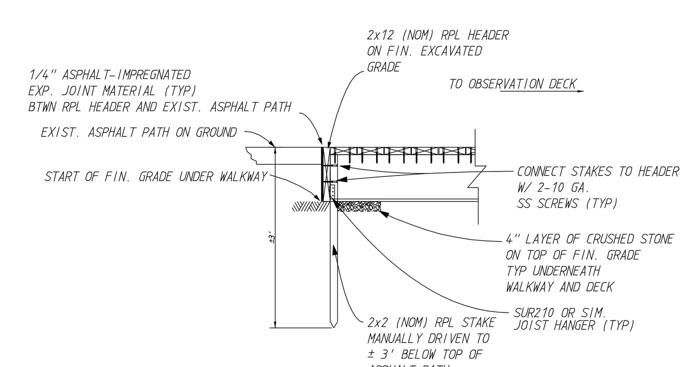

WALKWAY-ASPHALT PATH CONNECTION DETAIL — 2E / MED10

SCALE: NOT TO SCALE

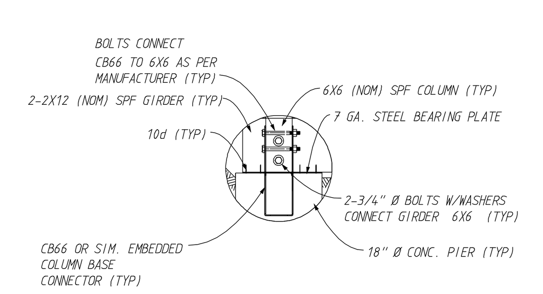

WALKWAY SUPPORT CONNECTION DETAIL AT BEGINNING OF WALKWAY — 2F / MED10

SCALE: NOT TO SCALE

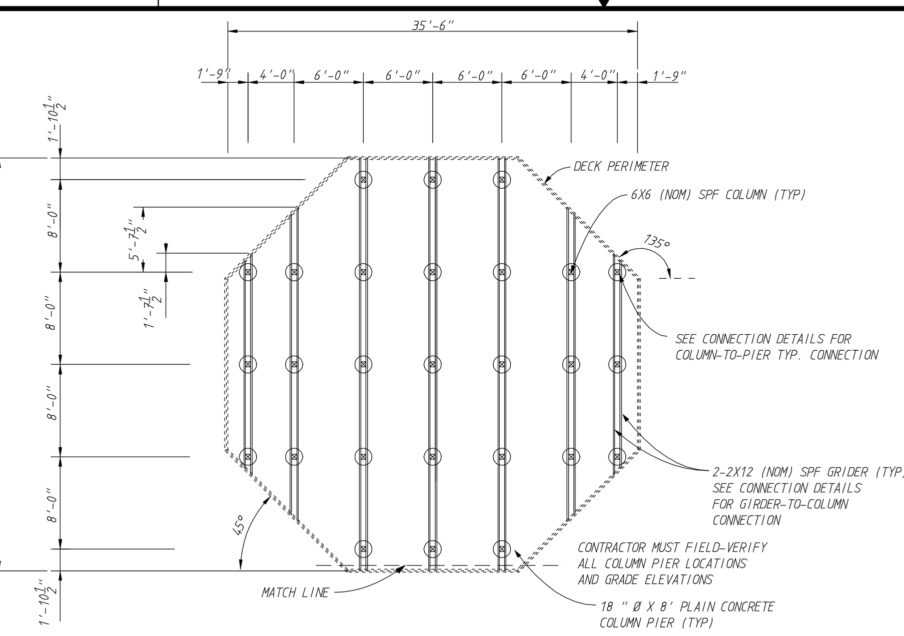

PIER AND GIRDER PLAN — 3.1 / MED10

SCALE: $\frac{3}{32}$" = 1'

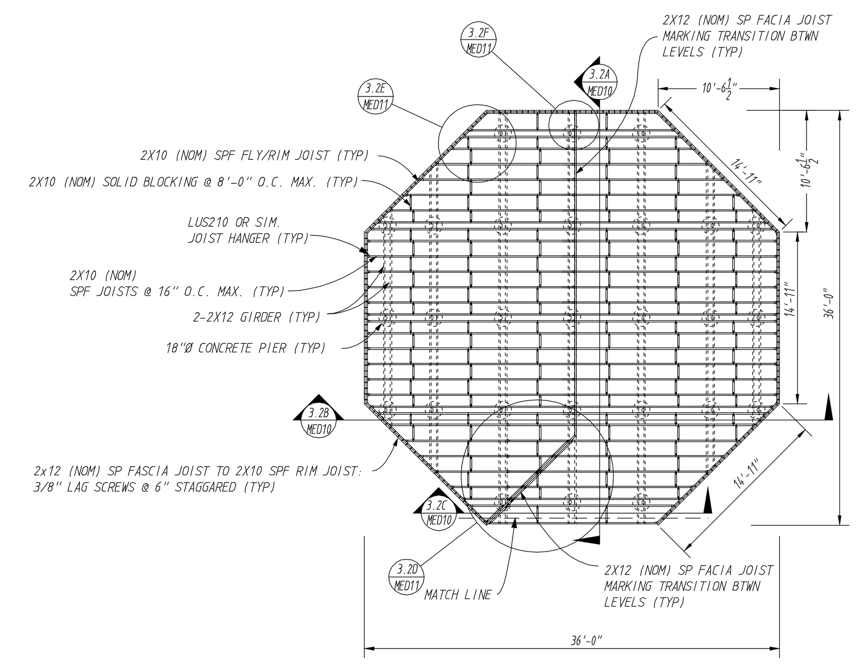

JOIST PLAN — 3.2 / MED10

SCALE: $\frac{3}{32}$" = 1'

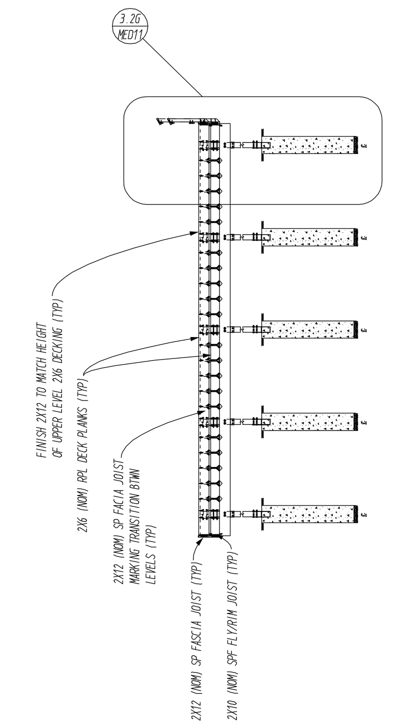

SECTION VIEW — 3.2A / MED10

SCALE: $\frac{3}{16}$" = 1'

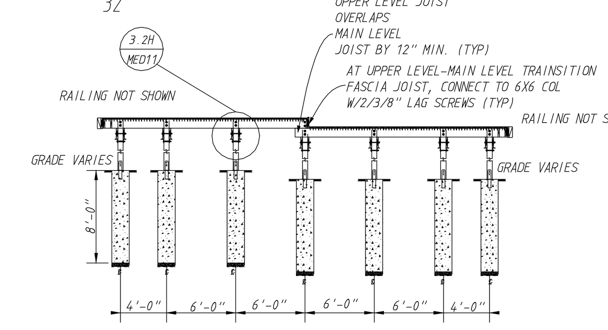

SECTION AT MID-POINT OF DECK — 3.2B / MED10

SCALE: $\frac{3}{32}$" = 1'

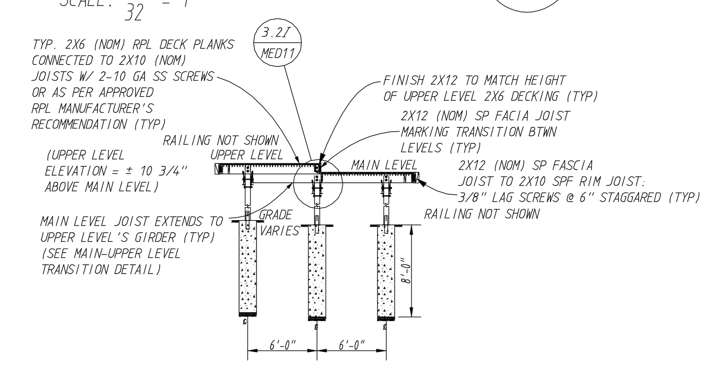

SECTION AT BEGINNING OF DECK — 3.2C / MED10

SCALE: $\frac{3}{32}$" = 1'

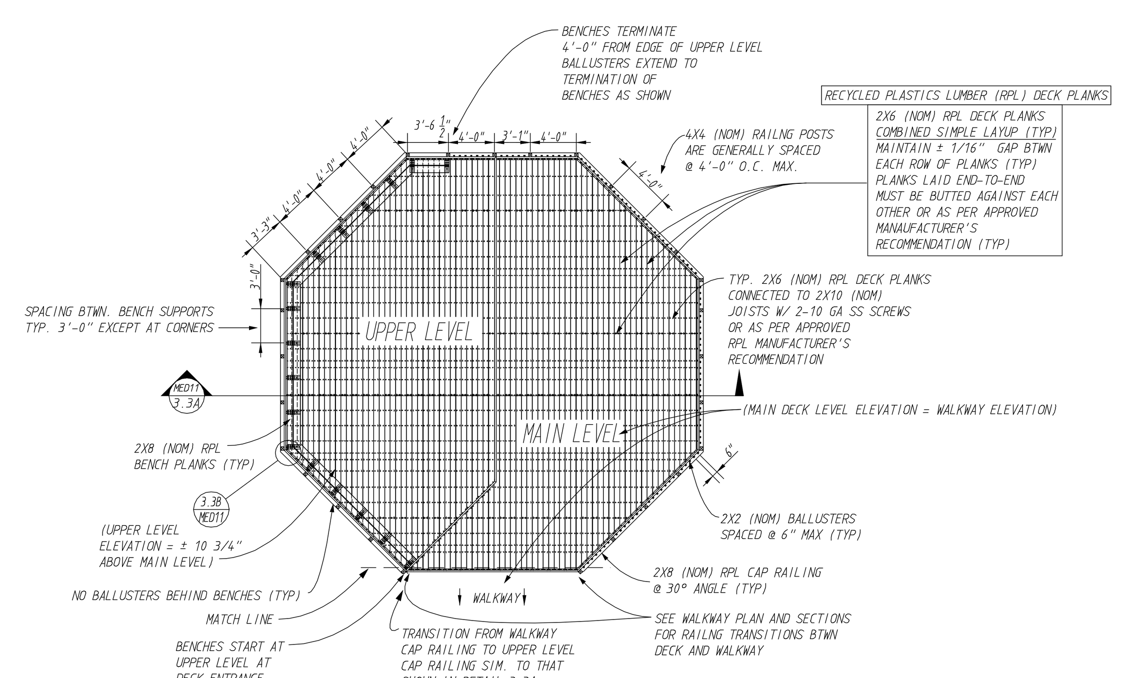

DECKING, RAILING AND BENCHES PLAN — 3.3 / MED10

SCALE: $\frac{3}{32}$" = 1'

SCALE: $\frac{3}{32}$" = 1'

SCALE: $\frac{3}{16}$" = 1'

SCALE: 1" = 25'

ABBREVIATIONS

ACI	AMERICAN CONCRETE INSTITUTE
AFPA	AMERICAN FOREST AND PAPER ASSOCIATION
AISC	AMERICAN INSTITUTE OF STEEL CONSTRUCTION
AISI	AMERICAN IRON AND STEEL INSTITUTE
AITC	AMERICAN INSTITUTE OF TIMBER CONSTRUCTION
ASTM	AMERICAN SOCIETY FOR TESTING AND MATERIALS
AWPA	AMERICAN WOOD PRESERVER'S ASSOCIATION
BOT	BOTTOM
BTWN	BETWEEN
CONC	CONCRETE
d	NAIL PENNYWEIGHT
EA	EACH
EL	ELEVATION
FIN	FINISHED
FL	FLOOR
GA	GAUGE
MAX	MAXIMUM
NDS	AFPA NATIONAL DESIGN SPECIFICATION
NOM	NOMINAL
PCF	POUNDS PER CUBIC FOOT
PL	PLATE
PLTA	PLASTIC LUMBER TRADE ASSOCIATION
PSI	POUNDS PER SQUARE INCH
REQ'D	REQUIRED
RPL	RECYCLED PLASTICS LUMBER
SIM	SIMILAR
SP	SOUTHERN YELLOW PINE, SELECT STRUCTURAL
SPC	SOUTHERN PINE COUNCIL
SPF	SPRUCE-PINE-FIR, NO. 1
SS	STAINLESS STEEL
T&B	TOP AND BOTTOM
TCM	AITC TIMBER CONSTRUCTION MANUAL
TYP	TYPICAL

STRUCTURAL NOTES

GENERAL

1. STAKE-OUT OF ALL PIER LOCATIONS MUST BE APPROVED BY THE CONTRACTING OFFICER'S REPRESENTATIVE PRIOR TO PLACING CONCRETE.

FASTENERS

1. UNLESS OTHERWISE INDICATED, ALL LAGS SCREWS AND WOOD SCREWS SHALL BE INSTALLED COUNTERSUNK AND IN PRE-DRILLED HOLES.

TIMBER

1. ALL MEMBERS UNLESS OTHERWISE SHOWN SHALL HAVE MINIMUM PROPERTIES SIM. TO #1 SPRUCE-PINE-FIR PER THE AFPA NATIONAL DESIGN SPECIFICATION, SUPPLEMENT DESIGN VALUES FOR WOOD CONSTRUCTION.

2. CONNECTIONS AND CONNECTION HARDWARE SHALL CONFORM TO AFPA NDS AND AMERICAN INSTITUTE OF TIMBER CONSTRUCTION TIMBER CONSTRUCTION MANUAL GUIDELINES.

3. MEMBERS SHOWN AS "SP" SHALL BE SOUTHERN YELLOW PINE, SELECT STRUCTURAL GRADE IN CONFORMANCE WITH SOUTHERN PINE COUNCIL GUIDELINES AND SOUTHERN PINE INSPECTION BUREAU.

4. ALL TIMBER SHALL BE PRESSURE-TREATED AND APPROPRIATELY PROTECTED AGAINST TERMITE ATTACK AS PER AWPA USE CATEGORY 3B GUIDELINES.

STEEL

1. ALL CONNECTION HARDWARE, NAILS, BOLTS, EMBEDMENTS AND OTHER METAL ITEMS, UNLESS OTHERWISE NOTED, SHALL BE HOT-DIPPED GALVANIZED IN ACCORDANCE WITH ASTM A653.

2. STEEL PLATE SHALL CONFORM TO ASTM A36.

3. STEEL BOLTS, UNLESS OTHERWISE SHOWN, SHALL CONFORM FOR AISC A307.

4. WOOD SCREWS SHOWN AS "SS" SHALL BE STAINLESS STEEL CONFORMING TO AISI 305 OR SIMILAR.

5. STEEL ANGLES SHALL CONFORM TO ASTM A36.

CONCRETE

1. ALL CONCRETE MATERIALS, CONCRETE PLACEMENT, INSTALLATION OF EMBEDDED ARTICLES AND FINISHING SHALL CONFORM TO THE LATEST VERSION OF ACI 318/318R.

2. MIN. COMPRESSIVE STRENGTH OF CAST-IN-PLACE CONCRETE, f'c, SHALL BE 4,000 PSI AT 28 DAYS.

RECYCLED PLASTICS LUMBER

1. ALL MEMBERS SHOWN AS "RPL" SHALL CONFORM TO ASTM D 6662.

2. MINIMUM ENGINEERING PROPERTIES OF RPL INCLUDE AS FOLLOWS:

MODULUS OF ELASTICITY	300,000 PSI
BENDING STRESS	NO FRACTURE @ 2,500 PSI
COMPRESSIVE STRESS	1,000 PSI
TENSILE STRESS	3,060 PSI
DENSITY	50 PCF

3. SUPPLIERS OF RECYCLED PLASTIC LUMBER SHALL BE RECOGNIZED BY THE PLASTIC LUMBER TRADE ASSOCIATION.

4. RPL SHALL MATCH AS CLOSE AS PRACTICABLE FINISHED SOUTHERN YELLOW PINE. COLOR MATCHING SHALL BE APPROVED PRIOR TO CONSTRUCTION INITIATION.

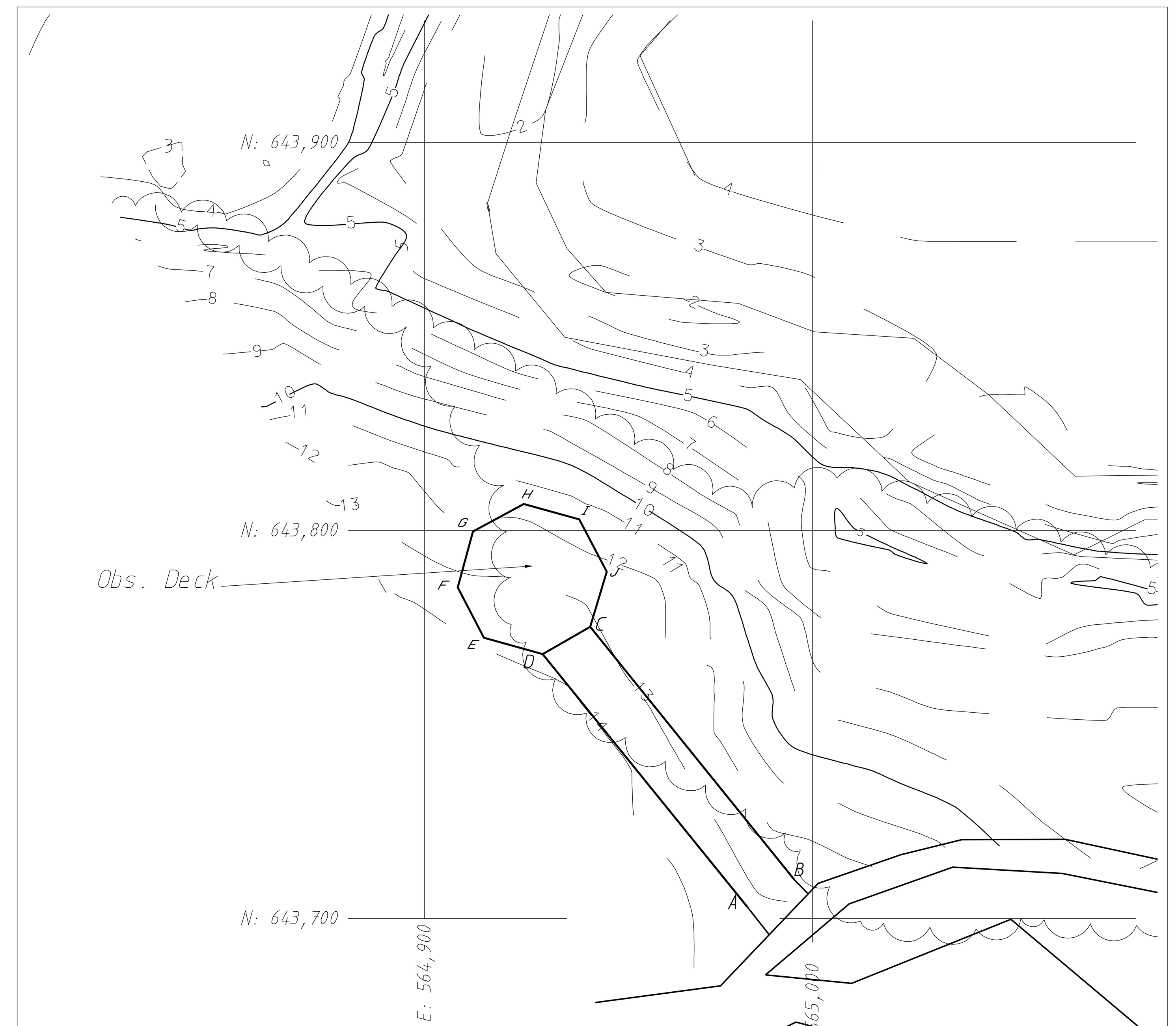

DECK AND WALKWAY COORDINATES

POINT	EASTING	NORTHING
A	564,970.60	643,693.70
B	564,982.00	643,703.60
C	564,941.50	643,775.80
D	564,929.30	643,768.80
E	564,914.10	643,773.00
F	564,907.40	643,786.00
G	564,911.30	643,800.40
H	564,924.40	643,807.50
I	564,938.70	643,803.50
J	564,945.80	643,790.00

EASTINGS AND NORTHINGS MEASURED TO NEAREST $\frac{1}{10}$ FOOT.

DECK LOCATION NOTES:

1. GRID VALUES SHOWN HEREON ARE BASED ON NEW JERSEY STATE PLANE COORDINATES. CONTROLLED VIA GPS FROM CORS STATION "NJIT" NEW JERSEY INSTITUTE OF TECHNOLOGY.

2. VERTICAL ELEVATIONS ARE BASED ON THE NATIONAL GEODETIC VERTICAL DATUM OF 1929 (NGVD 29).

REFERENCE: SHEET CC-MED-08

OBSERVATION DECK AND WALKWAY LOCATION MAP — 1 / MED10

SCALE: 1" = 25'

US Army Corps of Engineers
New York District

U.S. ARMY ENGINEER DISTRICT
CORPS OF ENGINEERS
NEW YORK, NEW YORK

Designed by: DAVID N. RACKMALES
Dwn by: DNR
Ckd by: SW
Reviewed by: Angelo Trotto
Submitted by:
Date: 15 MAY 2005
Size:
Rev.:
Drawing file no.: CC-MED-10
Drawing code:
Plot date: 22-AUG-2005 14:38
Plot by: David N. Rackmales
Scale: AS SHOWN
File name: E:\Rahway\Design Document Report\Drawings\Final Drawings\CC-MED-10 AND 11.dgn

ARTHUR KILL CHANNEL – HOWLAND HOOK
MARINE TERMINAL 40'/41' DEEPENING MITIGATION
JOSEPH MEDWICK PARK, CARTERET, NEW JERSEY

OBSERVATION DECK LAYOUT AND DETAILS

ALL WORK SHALL CONFORM TO ALL APPLICABLE REQUIREMENTS OF US ARMY CORPS OF ENGINEERS REGULATIONS, LOCAL GOVERNING CODES, STATE CONSTRUCTION AND ENERGY CONSERVATION CODES, HEALTH CODES, FIRE DEPARTMENT REGULATIONS, OSHA CODES AND THE NEW JERSEY BUILDING CODE.

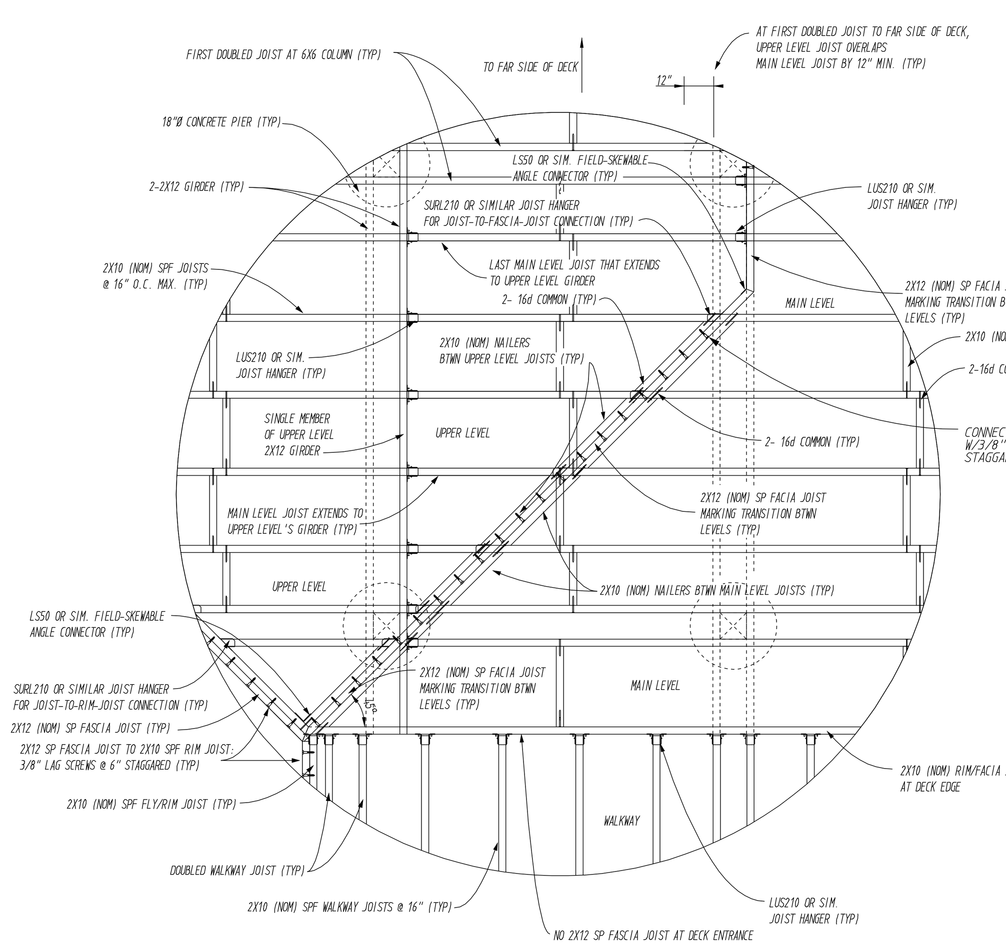

MAIN-UPPER TRANSITION AT DECK ENTRANCE — 3.2D / MED11

SCALE: NOT TO SCALE

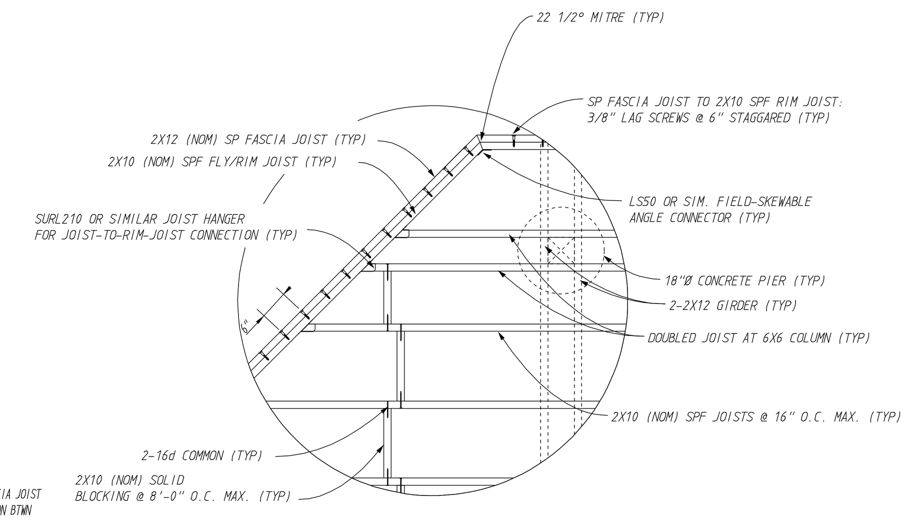

TYPICAL JOIST CONNECTIONS AT EDGE OF DECK — 3.2E / MED11

SCALE: NOT TO SCALE

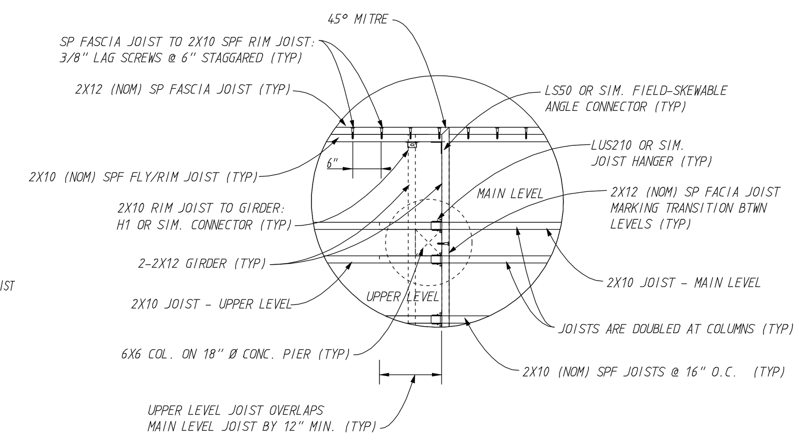

JOIST CONNECTIONS AT TRANSITION BETWEEN MAIN AND UPPER LEVELS — 3.2F / MED11

SCALE: NOT TO SCALE

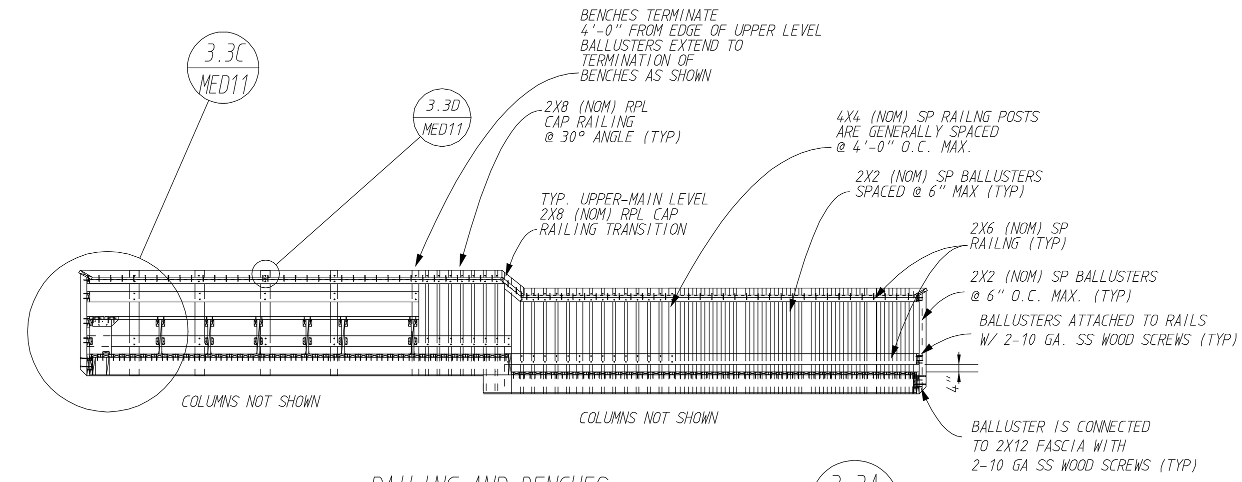

RAILING AND BENCHES — 3.3A / MED11

SCALE: $\frac{3}{16}$" = 1'

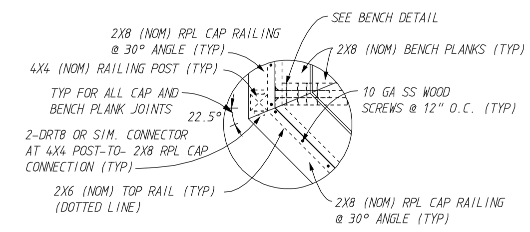

TYPICAL RAILING CAP DETAIL — 3.3B / MED11

SCALE: NOT TO SCALE

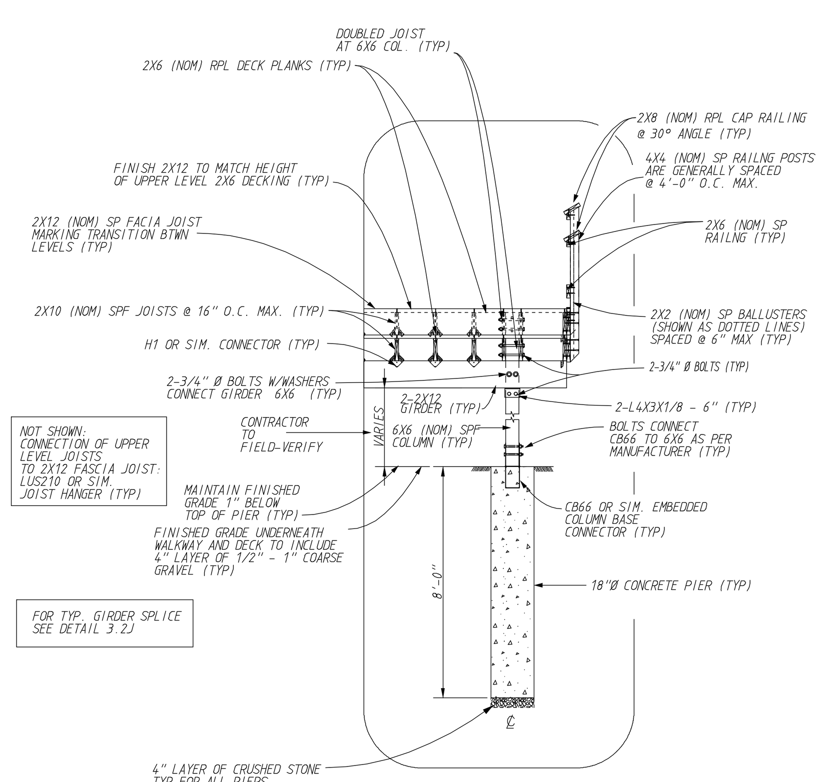

FRONT SECTION DETAIL — 3.2G / MED11

SCALE: NOT TO SCALE

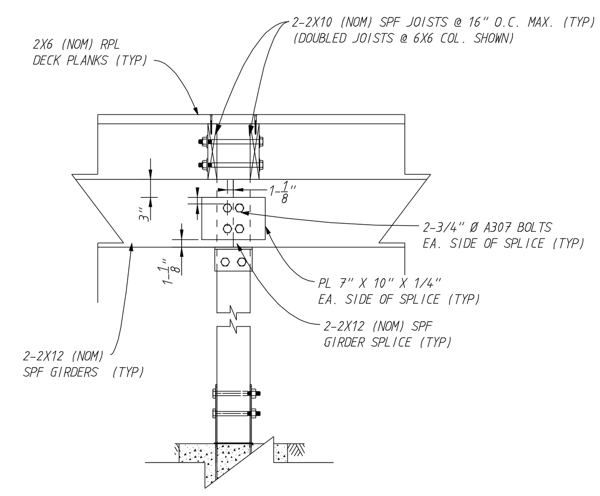

GIRDER SPLICE DETAIL — 3.2J / MED11

SCALE: NOT TO SCALE

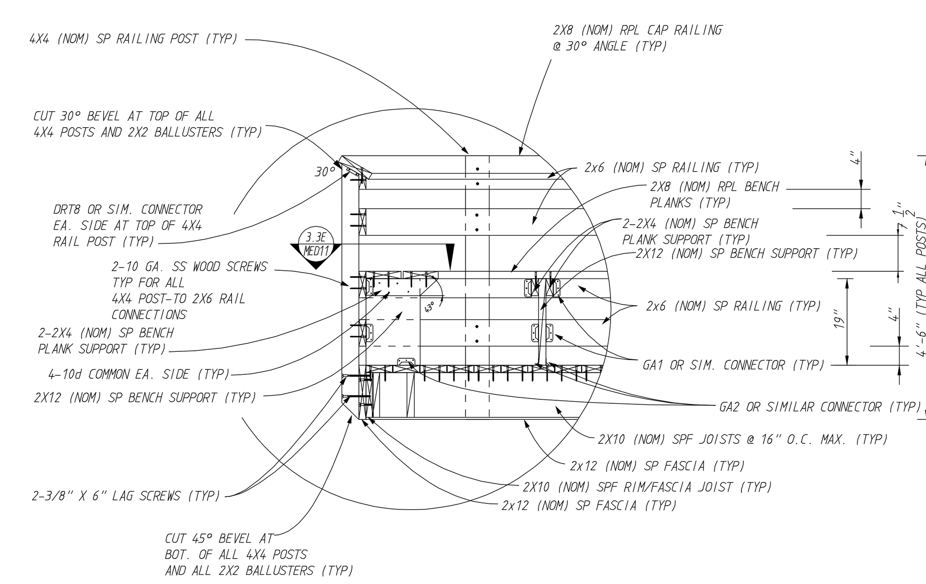

RAILS AND BENCHES DETAIL — 3.3C / MED11

SCALE: NOT TO SCALE

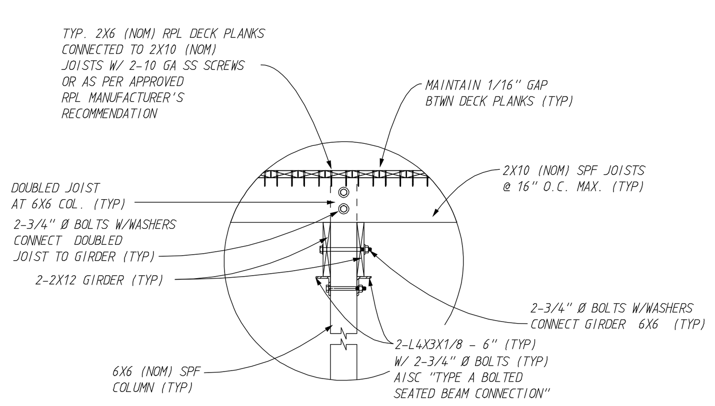

TYP GIRDER AND JOIST CONNECTIONS — 3.2H / MED11

SCALE: NOT TO SCALE

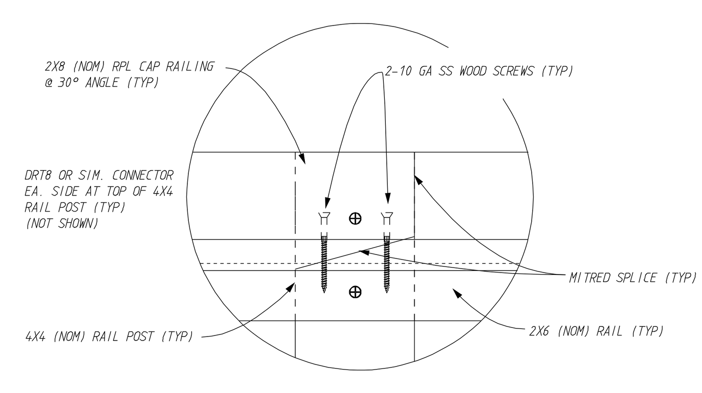

TYP. CAP RAIL SPLICE DETAIL — 3.3D / MED11

SCALE: NOT TO SCALE

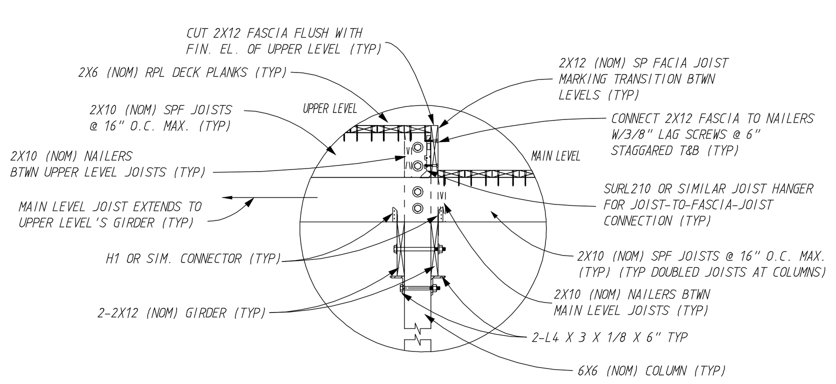

TRANSITION AT DECK ENTRANCE DETAIL — 3.2I / MED11

SCALE: NOT TO SCALE

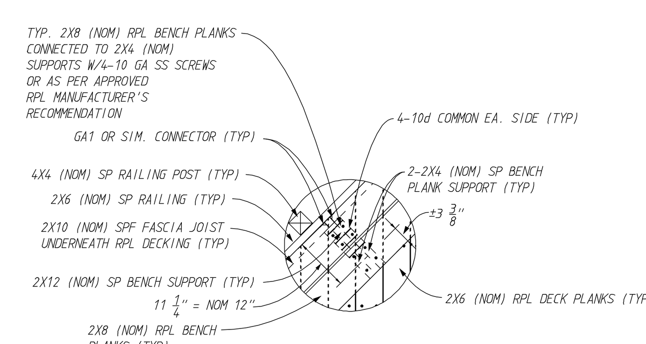

PARTIAL PLAN OF TYPICAL BENCH — 3.3E / MED11

SCALE: NOT TO SCALE

1' 3' 5'
0' 2' 4' 10'
SCALE: $\frac{3}{16}$" = 1'

US Army Corps of Engineers
New York District

U.S. ARMY ENGINEER DISTRICT
CORPS OF ENGINEERS
NEW YORK, NEW YORK

Designed by: DAVID N. RACKMALES		Date:	Size:	Rev.:
Dwn by: DNR	Ckd by:	Drawing file no.:		
Reviewed by:		Drawing code:		
Submitted by:		Plot date: 22-AUG-2005 14:40 Plot by: David N. Rackmales Scale: AS SHOWN		

File name: E:\Rahway\Design Document Report\Drawings\Final Drawings\CC-MED-10 AND 11.dgn

ARTHUR KILL CHANNEL - HOWLAND HOOK
MARINE TERMINAL 40'/41' DEEPENING MITIGATION
JOSEPH MEDWICK PARK, CARTERET, NEW JERSEY

OBSERVATION DECK LAYOUT AND DETAILS

Sheet reference number

CC-MED-11

Sheet 12 of 13

Symbol | Description | Date | Appr.

Submitted by: eJenkins
E:\Rahway\Design Document Report\Drawings\Final Drawings\CC-MED-10 AND 11.dgn
Plot Date: 22-AUG-2005 14:40

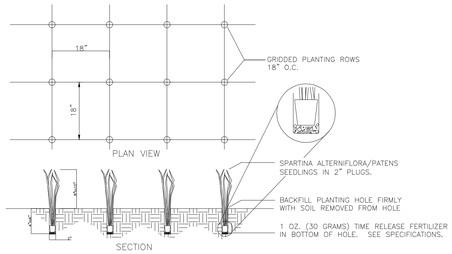

PLANTING DETAIL: LOW AND HIGH MARSH

SCALE: NOT TO SCALE

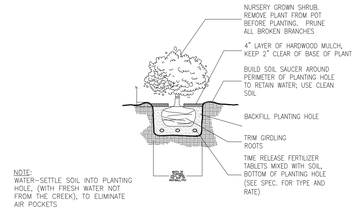

PLANTING DETAIL: SHRUB INSTALLATION

SCALE: NOT TO SCALE

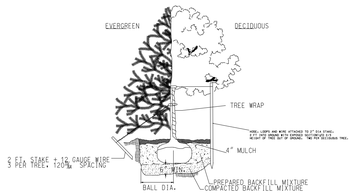

PLANTING DETAIL: TREE INSTALLATION

SCALE: NOT TO SCALE

ALL SPECIMEN TREES AND VEGETATION TO REMAIN ARE TO BE PROTECTED DURING CONSTRUCTION. THE CONTRACTOR SHALL INSTALL SNOW FENCING AT THE DRIP LINE OF EACH SPECIMEN BEFORE WORKING IN THE VICINITY OF THE VEGETATION, AS DIRECTED BY THE PROJECT BIOLOGIST.

CORRECT FENCING FOR SPECIMEN PROTECTION

SCALE: NOT TO SCALE

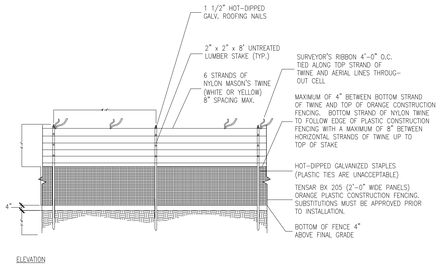

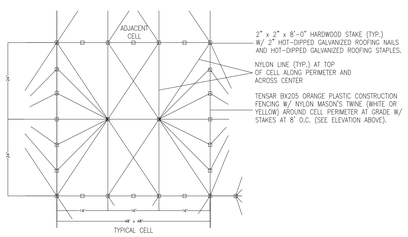

WATERFOWL BARRIER

SCALE: NOT TO SCALE

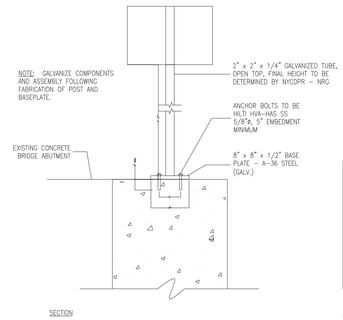

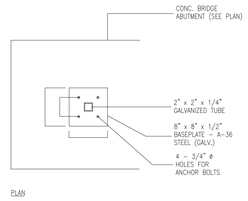

NOTE: SIGN SHALL BE INSTALLED ON A CONCRETE FOUNDATION. LOCATION TO BE SPECIFIED. CONTRACTOR SHALL VERIFY LOCATION WITH NJDEP-ONRR AND ACOE PRIOR TO INSTALLING POST.

INTERPRETIVE SIGN AND SIGN POST INSTALLATION

SCALE: NOT TO SCALE

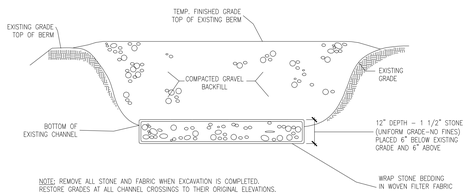

NOTE: REMOVE ALL STONE AND FABRIC WHEN EXCAVATION IS COMPLETED. RESTORE GRADES AT ALL CHANNEL CROSSINGS TO THEIR ORIGINAL ELEVATIONS.

TYPICAL TEMPORARY CHANNEL CROSSING

SCALE: NOT TO SCALE

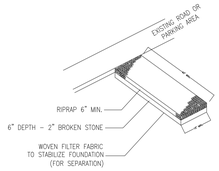

ANTI-TRACKING PAD DETAIL

SCALE: NOT TO SCALE

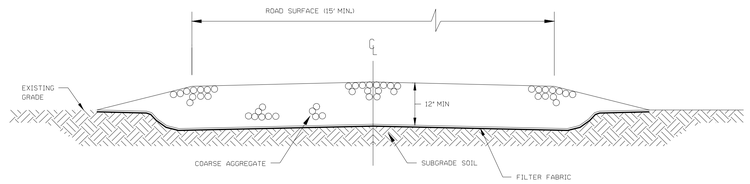

STABILIZED CONSTRUCTION ENTRANCE

SCALE: NOT TO SCALE

US Army Corps of Engineers
New York District

Symbol	Description	Date	Appr.

U.S. ARMY ENGINEER DISTRICT
CONTRACT DESIGN
NEW YORK, NEW YORK

Designed by: BETHANY BEARMORE
Dwn by: BB
Ckd by: SW
Reviewed by: ANGELO TROTTO
Submitted by:
Date: 15 MAY 2005
Drawing file no.: CC-MED-12
Drawing code:
Project: 26-AUG-2005 14:40
Bethany Bearmore
Scale: NA
Size
Rev.
File name: E:\Bethany\Design Document Report\Drawings\Final Drawings\CC-MED-12.dgn

ARTHUR KILL CHANNEL – HOWLAND HOOK
MARINE TERMINAL 40'x4' DEEPENING MITIGATION
JOSEPH MEDWICK PARK, CARTERET, NEW JERSEY

TYPICAL DETAILS

Sheet reference number
CC-MED-12
Sheet 13 of 13

Submitted by: s3hmitab
E:\Bethany\Design Document Report\Drawings\Final Drawings\CC-MED-12.dgn
Plot Date: 22-AUG-2005 14:40