AMENDMENT OF SOLICITATION/MODIFICATION OF CONTRACT

1. CONTRACT ID CODE	PAGE OF PAGES
	1 | 18

2. AMENDMENT/MODIFICATION NO.	3. EFFECTIVE DATE	4. REQUISITION/PURCHASE REQ. NO.	5. PROJECT NO.(If applicable)
0002	20-Jul-2001	W16ROE-1166-7518	

6. ISSUED BY	CODE	7. ADMINISTERED BY (If other than item 6)	CODE
USA ENGINEER DISTRICT, NEW YORK ATTN: CENAN-CT ROOM 1843 26 FEDERAL PLAZA (DACA51) NEW YORK NY 10278-0090	DACA51	**See Item 6**	

8. NAME AND ADDRESS OF CONTRACTOR (No., Street, County, State and Zip Code)		
	X	9A. AMENDMENT OF SOLICITATION NO. DACA51-01-R-0028
	X	9B. DATED (SEE ITEM 11) 20-Jun-2001
		10A. MOD. OF CONTRACT/ORDER NO.
		10B. DATED (SEE ITEM 13)
CODE / FACILITY CODE		

11. THIS ITEM ONLY APPLIES TO AMENDMENTS OF SOLICITATIONS

[X] The above numbered solicitation is amended as set forth in Item 14. The hour and date specified for receipt of Offer [ ] is extended, [X] is not extended.

Offer must acknowledge receipt of this amendment prior to the hour and date specified in the solicitation or as amended by one of the following methods: (a) By completing Items 8 and 15, and returning _____ copies of the amendment; (b) By acknowledging receipt of this amendment on each copy of the offer submitted; or (c) By separate letter or telegram which includes a reference to the solicitation and amendment numbers. FAILURE OF YOUR ACKNOWLEDGMENT TO BE RECEIVED AT THE PLACE DESIGNATED FOR THE RECEIPT OF OFFERS PRIOR TO THE HOUR AND DATE SPECIFIED MAY RESULT IN REJECTION OF YOUR OFFER. If by virtue of this amendment you desire to change an offer already submitted, such change may be made by telegram or letter, provided each telegram or letter makes reference to the solicitation and this amendment, and is received prior to the opening hour and date specified.

12. ACCOUNTING AND APPROPRIATION DATA (If required)

13. THIS ITEM APPLIES ONLY TO MODIFICATIONS OF CONTRACTS/ORDERS.
IT MODIFIES THE CONTRACT/ORDER NO. AS DESCRIBED IN ITEM 14.

[ ] A. THIS CHANGE ORDER IS ISSUED PURSUANT TO: (Specify authority) THE CHANGES SET FORTH IN ITEM 14 ARE MADE IN THE CONTRACT ORDER NO. IN ITEM 10A.

[ ] B. THE ABOVE NUMBERED CONTRACT/ORDER IS MODIFIED TO REFLECT THE ADMINISTRATIVE CHANGES (such as changes in paying office, appropriation date, etc.) SET FORTH IN ITEM 14, PURSUANT TO THE AUTHORITY OF FAR 43.103(B).

[ ] C. THIS SUPPLEMENTAL AGREEMENT IS ENTERED INTO PURSUANT TO AUTHORITY OF:

[ ] D. OTHER (Specify type of modification and authority)

E. IMPORTANT: Contractor [ ] is not, [ ] is required to sign this document and return _____ copies to the issuing office.

14. DESCRIPTION OF AMENDMENT/MODIFICATION (Organized by UCF section headings, including solicitation/contract subject matter where feasible.)

The purpose of this amendment is as follows: to make additions to the specifications; to update the plans. Technical proposal due date remains 31 July 2001. Price proposals still due 24 August 2001. The price schedule will be issued in an upcoming amendment.

This amendment shall be attached to the specifications and shall be a part thereof. The offeror is required to acknowledge receipt of this amendment either by completing the space provided on the Offer and Award or Contract form when that form is submitted with the proposal, or by separate letter, or by telegram prior to the opening of the proposal. Failure to acknowledge all amendments may cause rejection of the proposal.

Except as provided herein, all terms and conditions of the document referenced in Item 9A or 10A, as heretofore changed, remains unchanged and in full force and effect.

15A. NAME AND TITLE OF SIGNER (Type or print)		16A. NAME AND TITLE OF CONTRACTING OFFICER (Type or print)	
15B. CONTRACTOR/OFFEROR _____ (Signature of person authorized to sign)	15C. DATE SIGNED	16B. UNITED STATES OF AMERICA BY _____ (Signature of Contracting Officer)	16C. DATE SIGNED 20-Jul-2001

SECTION SF 30 BLOCK 14 CONTINUATION PAGE

This amendment includes the 100% plans and specifications.

EACH AMENDMENT IS CUMULATIVE; I.E., THE DISKETTE OR WEBSITE DOWNLOAD CONTAINS NOT ONLY THE AMENDED INFORMATION BUT ALSO ALL PRIOR VERSIONS OF THE SOLICATION. THEREFORE, PRIOR DISKS CAN BE DISCARDED. THE MOST RECENT DISK/WEB DOWNLOAD CONTAINS THE COMPLETE SOLICITATION.

A bid bond is required, but only at the time the price proposal is submitted.

Only those offerors interested in being general contractors are to submit the documentation required by this Request for Proposal (RFP). Subcontractors are to deal with potential general contractors only.

Section 00600 is to be submitted with the technical proposal.

The contract form SF 1442 is to be submitted without pricing, at the due date for technical proposals and again WITH PRICE when price proposals are due.

Offerors are directed to section 00110, subsec. 6.1, whereby only the TEN most recent projects within each dollar category are required – NOT all projects completed.

Regardless of any statements to the contrary, this is an RFP not a sealed bid.

The “subcontracting effort” submission is not required until the price proposal is submitted. A sample subcontracting plan is included (see below).

52.222.21, Prohibition of Segregated Facilities (replaces “Certification of Nonsegregated Facilities”) and 52.215-8, Order of Precedence, are hereby added by reference.

With respect to the client survey, this will be distributed by the government (by e-mail or other means) to the references listed by the offeror. These surveys are to be returned attention Michael McHugh, Room 1843, within three business days of receipt. Failure of the offeror’s reference to respond to the questionnaire may be detrimental to the evaluation of the offeror’s proposal. Therefore, it is incumbent on the offeror that the reference information (point of contact, telephone and facsimile numbers, and e-mail addresses) is current and that the reference is alerted to the fact that a representative of the government may contact them.

SMALL BUSINESS SUBCONTRACTING PLAN
(MODEL OUTLINE *)

IDENTIFICATION DATA

Contractor: _____

ADDRESS: _____

SOLICITATION OR CONTRACT NUMBER: _____

ITEM/SERVICE: _____

TOTAL AMOUNT OR CONTRACT
(INCLUDING OPTIONS) $ _____

PERIOD OF CONTRACT PERFORMANCE
(DAY, MO. & YR.) _____

* Federal Acquisition Regulation (FAR), paragraph 19.708(b)(1)) prescribes the use of the clause at FAR 52.219-9 entitled "Small Business Subcontracting Plan." The following is a suggested model for use when formulating such subcontracting plan. While this model plan has been designed to be consistent with FAR 52.219-9, other formats of a subcontracting plan may be acceptable. However, failure to include the essential information as exemplified in this model may be cause for either a delay in acceptance or the rejection of a bid or offer where the clause is applicable. Further, the use of this model is not intended to waive other requirements that may be applicable under FAR 52.219-9. "SUBCONTRACT," as used in this clause, means any agreement (other than one involving an employer-employee relationship) entered into by a federal government prime contractor or subcontractor calling for supplies or services required for performance of the contract or subcontract.

1. TYPE OF PLAN (check one)
◊ Individual Plan (All elements developed specifically for this contract and applicable for the full term of this contract, including any option periods.)
◊ Master Plan (Goals developed for this contract; all other elements standard; must be renewed every year.)
◊ Commercial Products Plan (Contractor sells large quantities of off-the-shelf commodities to many Government agencies. Plans/goals negotiated by a lead agency on a company-wide basis rather than

for individual contracts. Plan effective only during the year for which it is approved. The contractor must provide a copy of the lead agency approval.)

2. GOALS

State separate dollar and percentage goals for using small business, veteran-owned small business, HUBZone small business, small disadvantaged business, and women-owned small business concerns as subcontractors in the following format. (**For a contract with options, provide a separate statement for the basic contract and individual statements for each option year.**)

a. Total estimated dollar value and percent of planned subcontracting with small businesses (include veteran-owned small, HUBZone small, small disadvantaged, and women-owned small business concerns):
(% of "c")

$ _____ and _____ %

b. Total estimated dollar value and percent of planned subcontracting with large businesses (all business concerns classified as "other than small"): (% of "c")

$ _____ and _____ %

c. Total estimated dollar value of all planned subcontracting; i.e., the sum of a and b above:

$ _____ (100 Percent)

d. Total estimated dollar value and percent of planned subcontracting with veteran-owned small businesses: (% of "c")

$ _____ and _____ %

e. Total estimated dollar value and percent of planned subcontracting with HUBZone small businesses: (% of "c")

$ _____ and _____ %

f. Total estimated dollar value and percent of planned subcontracting with small disadvantaged businesses: (% of "c")

$ _____ and _____ %

g. Total estimated dollar value and percent of planned subcontracting with women-owned small businesses: (% of "c")

$ _____ and _____ %

3. Provide a description of all the products and/or services to be subcontracted under this contract, and indicate the types of businesses supplying them: i.e., OTHER THAN SMALL BUSINESS (OTHER, e.g., LARGE BUSINESS), SMALL BUSINESS (SB), VETERAN-OWNED SMALL BUSINESS (VOSB), HUBZONE SMALL BUSINESS, SMALL DISADVANTAGED BUSINESS (SDB), AND WOMEN-OWNED SMALL BUSINESS (WOSB):

(Check all that apply)

Subcontracted Product/Service	Other	SB	VOSB	HUBZone	SDB	WOSB

(Attach additional sheets if necessary.)

4. A description of the method used to develop the subcontracting **GOALS**:

5. A description of the method used to identify potential **SOURCES** for solicitation purposes (e.g., whether you used existing company source lists, the Procurement Marketing and Access Network (PRO-Net) of the Small Business Administration (SBA), veterans service organizations, the National Minority Purchasing Council Vendor Information Service, the Research and Information Division of the Minority Business Development Agency in the Department of Commerce, or small, HUBZone

small, small disadvantaged, and women-owned small business trade associations. A firm may rely on the information contained in PRO-Net (at http://pro-net.sba.gov/) as an accurate representation of a concern's size and ownership characteristics for the purposes of maintaining a small, veteran-owned small, HUBZone small, and women-owned small business source list. Use of PRO-Net as its source list does not relieve a firm of its responsibilities (e.g., outreach, assistance, counseling, publicizing subcontracting opportunities) in this clause.

(Attach additional sheets if necessary.)

6. Indirect costs have _____ have not _____ been included in the dollar and percentage subcontracting goals stated above. (Check one.)

If indirect costs have been included, explain the method used to determine the proportionate share of such costs to be allocated as subcontracts to small, veteran-owned small business, HUBZone small, small disadvantaged, and women-owned small business concerns.

7. PROGRAM ADMINISTRATOR

Name, title, position within the corporate structure, and duties and responsibilities of the employee who will administer the contractor's subcontracting program.

NAME: _____

TITLE: _____
ADDRESS:

_____

TELEPHONE: _____

FACSIMILE: _____
Email Address:
_____

Duties: Has general overall responsibility for the contractor's subcontracting program, i.e., developing, preparing, and executing individual subcontracting plans and monitoring performance relative to the requirements of this particular plan. These duties include, but are not limited to, the following activities:

a. Developing and promoting company-wide policy initiatives that demonstrate the company's support for awarding contracts and subcontracts to small, veteran-owned small, HUBZone small, small disadvantaged, and women-owned small business; and assure that small, veteran-owned small, HUBZone small, small disadvantaged, and women-owned small businesses are included on the source lists for solicitations for products and services they are capable of providing;

b. Developing and maintaining bidder's lists of small, veteran-owned small, HUBZone small, small disadvantaged, and women-owned small business concerns from all possible sources;

c. Ensuring periodic rotation of potential subcontractors on bidders lists;

d. Ensuring that procurement "packages" are designed to permit the maximum possible participation of small, veteran-owned small, HUBZone small, small disadvantaged, and women-owned small businesses;

e. Make arrangements for the utilization of various sources for the identification of small, veteran-owned small, HUBZone small, small disadvantaged, and women-owned small businesses such as the SBA's PRO-Net, the National Minority Purchasing Council Vendor Information Service, the Office

of Minority Business Data Center in the Department of Commerce, the facilities of local small business, minority associations, and contact with federal agencies' Small Business Specialists;

f. Overseeing the establishment and maintenance of contract and subcontract award records;

g. Attending or arranging for the attendance of company counselors at Business Opportunity Workshops, Minority Business Enterprise Seminars, Trade Fairs, Procurement Conferences, etc.;

h. Ensure that small, veteran owned small, HUBZone small, small disadvantaged, and women-owned small business concerns are made aware of subcontracting opportunities and how to prepare responsive bids to the company;

i. Conducting or arranging for the conduct of training for purchasing personnel regarding the intent and impact of Section 8(d) of the Small Business Act on purchasing procedures;

j. Monitoring the company's performance and making any adjustments necessary to achieve the subcontract plan goals;

k. Preparing, and submitting timely, required subcontract reports;

l. Coordinating the company's activities during the conduct of compliance reviews by federal agencies;

m. Providing technical assistance; e.g., engineering, quality control, and managerial assistance to small, veteran-owned small, HUBZone small, small disadvantaged, and women-owned small businesses.

n. Other duties:

_____

_____

8. EQUITABLE OPPORTUNITY

Describe efforts the offeror will make to ensure that small, veteran-owned small, HUBZone small, small disadvantaged, and women-owned small business concerns will have an equitable opportunity to compete for subcontracts. These-efforts include, but are not limited to, the following activities:

a. Outreach efforts to obtain sources:

1. Contacting minority, women's, and small business trade associations;

2. Contacting business development organizations;

3. Attending small, veteran's, minority, and women's business procurement conferences and trade fairs;

4. Requesting sources from the Small Business Administration's (SBA) PRO-Net;

5. Utilizing newspaper and magazine ads to encourage new sources.

b. Internal efforts to guide and encourage purchasing personnel:

1. Presenting workshops, seminars, and training programs;

2. Establishing, maintaining, and using small, veteran-owned small, HUBZone small, small disadvantaged, and women-owned small business source lists, guides, and other data for soliciting subcontracts; and
3. Monitoring activities to evaluate compliance with the subcontracting plan.

c. Additional efforts:

_____

_____

9. FLOW-DOWN CLAUSE

The contractor agrees to include the provisions under FAR 52.219-8, "Utilization of Small Business Concerns," in all subcontracts that offer further subcontracting opportunities. All subcontractors, except small business concerns, that receive subcontracts in excess of $500,000 ($1,000,000 for construction) must adopt and comply with a plan similar to the plan required by FAR 52.219-9, "Small Business Subcontracting Plan."

10. REPORTING AND COOPERATION

The contractor gives assurance of: (1) cooperation in any studies or surveys that may be required; (2) submission of periodic reports which show compliance with the subcontracting plan; (3) submission of Standard Form (SF) 294, "Subcontracting Report for Individual Contract," and SF-295, "Summary Subcontract Report," in accordance with the instructions on the forms; and (4) ensuring that large business subcontractors with subcontracting plans agree to submit Standard Forms 294 and 295.

Reporting Period	Report Due	Due Date
Oct 1 – March 31	SF-294	4/30
Apr 1 – Sept 30	SF-294	10/30
Oct 1 – Sept 30	SF-295	10/30

Addresses

a) SF-294 to be submitted to the Deputy, Small Business, New York District, 26 Federal Plaza Room 21-130E ; and the cognizant SBA Commercial Market Representative.

b) SF-295 to be submitted as above..

11. RECORDKEEPING

The following is a recitation of the type of records the contractor will maintain to demonstrate the procedures adopted to comply with the requirements and goals in the subcontracting plan. These records will include, but not be limited to, the following:

a. If the prime contractor is not using PRO-Net as its source for small, veteran-owned small, HUBZone small, small disadvantaged, and women-owned small business concerns, list the names of guides and other data identifying such vendors;

b. Organizations contacted in an attempt to locate small, veteran-owned small, HUBZone small, small disadvantaged, and women-owned small business sources;

c. On a contract-by-contract basis, records on each subcontract solicitation resulting in an award of more than $100,000 indicating: (1) whether small business concerns were solicited, and if not, why not; (2) whether veteran-owned small business concerns were solicited, and if not, why not; (3) whether HUBZone small business concerns were solicited, and if not, why not; (4) whether small disadvantaged business concerns were solicited, and if not, why not; (5) whether women-owned small business concerns were solicited, and if not, why not; and (6) if applicable, the reason that the award was not made to a small business concern;

d. Records to support other outreach efforts, e. g., trade associations, business development organizations; conferences and trade fairs to locate small, HUBZone small, small disadvantaged, and women-owned small business sources; and veterans service organizations;

e. Records to support internal guidance and encouragement provided to buyers through (1) workshops, seminars, training programs, incentive awards, and (2) monitoring of activities to evaluate compliance; and

f. On a contract-by-contract basis, records to support subcontract award data including the name, address, and business size of each subcontractor. (This item is not required on a contract-by-contract basis for company or division-wide commercial plans.)

g. Additional records:

_____

_____

This subcontracting plan was submitted by:

Signature: _____

Typed Name: _____

Title: _____

Date Prepared: _____

Phone Number: _____

Facsimile Number:

Email address: _____

SADBUS Recommendation:_____/Date_____
Kathleen Hirschy
Deputy for Small Business
New York District
212 264 0147 Email: Kathleen.hirschy@usace.army.mil

SBA Approval:

Agency: U.S. Small Business Administration

Signature: _____
Typed Name: Debra B. Libow
Title: SBA Procurement Center Representative

Date Approved: _____
Phone Number: 212-264-4395
Facsimile Number: 212-264-3013

_____

Contracting Officer Approval:_____/Date_____
Ella D. Snell
Chief, Contracting Division

Lisa Renee Kraus
Contracts Branch

PROJECT TABLE OF CONTENTS

DIVISION 01 - GENERAL REQUIREMENTS

01010 SUMMARY OF WORK
01025 MEASUREMENT AND PAYMENT
01030 OPTIONS
01045 CUTTING AND PATCHING
01090 SOURCES FOR REFERENCE PUBLICATIONS
01120 ALTERATION PROJECT PROCEDURES
01312 RESIDENT MANAGEMENT SYSTEM (RMS)
01320 PROJECT SCHEDULE: NETWORK ANALYSIS SYSTEM
01330 SUBMITTAL PROCEDURES
01410 ENVIRONMENT PROTECTION
01420 SAFETY
01451 CONTRACTOR QUALITY CONTROL
01452 TESTING FOR MECHANICAL AND ELECTRICAL SYSTEMS
01453 CONTRACTOR WARRANTY MANAGEMENT
01500 TEMPORARY CONSTRUCTION FACILITIES
01568 EROSION AND SEDIMENT CONTROL
01810 COMMISSIONING OF SYSTEMS

DIVISION 02 - SITE WORK

02070 REMOVAL AND DISPOSAL OF POLYCHLORINATED BIPHENYL (PCB) CONTAINING LIGHT BALLASTS AND MERCURY CONTAINING LIGHT BULB MATERIALS
02080 ASBESTOS ABATEMENT
02090 LEAD-BASED PAINT (LBP) ABATEMENT AND DISPOSAL
02120 TRANSPORTATION AND DISPOSAL OF HAZARDOUS MATERIALS
02220 DEMOLITION
02221 EXCAVATION, FILLING AND BACKFILLING FOR BUILDINGS
02222 ROCK EXCAVATION
02223 ROCK BOLTING
02230 CLEARING AND GRUBBING
02316 EXCAVATION, TRENCHING, AND BACKFILLING FOR UTILITIES SYSTEMS
02466 DRILLED FOUNDATION CAISSONS
02511 CONCRETE SIDEWALKS AND CURBS AND GUTTERS
02531 SANITARY SEWERS
02551 BITUMINOUS PAVING FOR ROADS, STREETS AND OPEN STORAGE AREAS
02580 PAVEMENT MARKINGS
02621 FOUNDATION DRAINAGE SYSTEM
02720 STORM-DRAINAGE SYSTEM
02821 FENCING
02950 PLANTING

DIVISION 03 - CONCRETE

03100 STRUCTURAL CONCRETE FORMWORK
03150 EXPANSION JOINTS, CONTRACTION JOINTS, AND WATERSTOPS
03200 CONCRETE REINFORCEMENT
03300 CAST-IN-PLACE STRUCTURAL CONCRETE
03366 CHEMICALLY STAINED CONCRETE

DIVISION 04 - MASONRY

04200 MASONRY
04900 RESTORATION AND CLEANING OF MASONRY IN HISTORIC STRUCTURES

DIVISION 05 - METALS

05090 WELDING, STRUCTURAL
05093 WELDING PRESSURE PIPING
05120 STRUCTURAL STEEL
05300 STEEL DECKING
05400 COLD-FORMED METAL FRAMING
05500 MISCELLANEOUS METAL
05550 STEEL TRUSS EGRESS BRIDGE SUPERSTRUCTURE
05800 EXPANSION JOINT COVER ASSEMBLIES

DIVISION 06 - WOODS & PLASTICS

06100 ROUGH CARPENTRY
06200 FINISH CARPENTRY
06400 ARCHITECTURAL WOODWORK

DIVISION 07 - THERMAL & MOISTURE PROTECTION

07110 BITUMINOUS DAMPPROOFING
07130 FLUID APPLIED WATERPROOFING
07131 ELASTOMERIC MEMBRANE WATERPROOFING
07140 CEMENTITIOUS WATERPROOFING
07141 METAL OXIDE WATERPROOFING
07146 SWIMMING POOL CEMENTITIOUS WATERPROOFING
07210 BUILDING INSULATION
07220 ROOF INSULATION
07240 EXTERIOR AND INTERIOR FINISH SYSTEM
07413 METAL SIDING
07551 MODIFIED BITUMEN ROOFING
07610 COPPER ROOF SYSTEM
07625 COPPER SHEET METAL FLASHING
07810 SPRAY-APPLIED FIREPROOFING
07840 FIRESTOPPING
07900 JOINT SEALING
07920 SWIMMING POOL SEALANTS AND CAULKING

DIVISION 08 - DOORS & WINDOWS

08000 DOOR SCHEDULE
08110 STEEL DOORS AND FRAMES
08120 STAINLESS STEEL DOORS AND FRAMES
08210 WOOD DOORS
08212 STILE AND RAIL WOOD DOORS
08330 OVERHEAD ROLLING DOORS
08331 METAL ROLLING COUNTER DOORS
08353 OPERABLE PARTITIONS
08520 ALUMINUM WINDOWS
08700 BUILDERS' HARDWARE
08810 GLASS AND GLAZING

08900 GLAZED CURTAIN WALLS
08950 TRANSLUCENT WALL AND SKYLIGHT SYSTEMS
08960 ALUMINUM FRAMED CANOPYS

DIVISION 09 - FINISHES

09000 FINISH SCHEDULE
09155 SWIMMING POOL PLASTER
09200 LATHING AND PLASTERING
09215 PLASTER PATCHING
09250 GYPSUM WALLBOARD
09310 CERAMIC TILE
09380 SWIMMING POOL TILE
09445 RESINOUS TERRAZZO FLOORING
09446 PRECAST TERRAZZO STAIR TREADS/RISERS
09510 ACOUSTICAL CEILINGS
09600 INTERIOR STONE
09620 RESILIENT ATHLETIC FLOORING
09640 WOOD STRIP FLOORING
09650 RESILIENT FLOORING
09670 INDUSTRIAL FLOORING
09680 CARPET
09840 ACOUSTICAL WALL TREATMENT
09900 PAINTING, GENERAL
09915 COLOR SCHEDULE
09945 MULTI-COLORED INTERIOR COATINGS

DIVISION 10 - SPECIALTIES

10000 MISCELLANEOUS SPECIALTIES
10100 VISUAL COMMUNICATIONS SPECIALTIES
10160 TOILET PARTITIONS
10190 HOSPITAL CUBICLE TRACKS
10200 LOUVERS
10430 EXTERIOR SIGNAGE
10440 INTERIOR SIGNAGE
10445 SIGNAGE SCHEDULE
10500 LOCKERS
10520 FIRE EXTINGUISHERS, CABINETS AND ACCESSORIES
10605 WIRE MESH PARTITIONS
10800 TOILET ACCESSORIES

DIVISION 11 - EQUIPMENT

11211 PUMPS: WATER, CENTRIFUGAL AND FUEL OIL TRANSFER
11310 PUMPS; SEWAGE AND SLUDGE
11480 ATHLETIC EQUIPMENT
11482 SCOREBOARDS AND TIMING SYSTEMS
11491 RACQUETBALL COURTS

DIVISION 12 - FURNISHINGS

12600 THEATER CHAIRS
12690 FLOOR GRIDS AND FRAMES

12765 BLEACHERS

DIVISION 13 - SPECIAL CONSTRUCTION

13080 SEISMIC PROTECTION FOR MECHANICAL, ELECTRICAL EQUIPMENT
13100 LIGHTNING PROTECTION SYSTEM
13150 SWIMMING POOL GENERAL REQUIREMENTS
13153 SWIMMING POOL PLUMBING, MECHANICAL AND CHEMICAL EQUIPMENT
13154 SWIMMING POOL EQUIPMENT
13158 HYDROTHERAPY POOL
13851 FIRE DETECTION AND ALARM SYSTEM, ADDRESSABLE
13852 FIRE ALARM REPORTING SYSTEM, RADIO TYPE
13930 COMBINATION STANDPIPE/SPRINKLER SYSTEM

DIVISION 14 - CONVEYING SYSTEMS

14210 ELEVATORS, ELECTRIC

DIVISION 15 - MECHANICAL

15080 THERMAL INSULATION FOR MECHANICAL SYSTEMS
15400 PLUMBING, GENERAL PURPOSE
15556 FORCED HOT WATER HEATING SYSTEMS USING WATER AND STEAM HEAT EXCHANGERS, GLYCOL HEAT RECOVERY SYSTEM AND WORK ASSOCIATED WITH DIESEL GENERATOR INSTALLATION
15562 HEATING AND UTILITIES SYSTEMS, CENTRAL STEAM
15650 CENTRAL REFRIGERATED AIR-CONDITIONING SYSTEM
15895 AIR SUPPLY, DISTRIBUTION, VENTILATION, AND EXHAUST SYSTEM
15951 DIRECT DIGITAL CONTROL FOR HVAC
15990 TESTING, ADJUSTING, AND BALANCING OF HVAC SYSTEMS
15995 COMMISSIONING OF HVAC SYSTEMS

DIVISION 16 - ELECTRICAL

16263 DIESEL-GENERATOR SET STATIONARY 100-2500 KW, WITH AUXILIARIES
16265 UNINTERRUPTIBLE POWER SUPPLY (UPS) SYSTEM ABOVE 15 KVA CAPACITY
16370 ELECTRICAL DISTRIBUTION SYSTEM, AERIAL
16375 ELECTRICAL DISTRIBUTION SYSTEM, UNDERGROUND
16410 AUTOMATIC TRANSFER SWITCHES
16415 ELECTRICAL WORK, INTERIOR
16475 COORDINATED POWER SYSTEM PROTECTION
16710 PREMISES DISTRIBUTION SYSTEM
16800 CENTRAL PAGING SYSTEM, SOUND SYSTEMS AND AUDIO-VISUAL SYSTEMS

APPENDICES

Appendix A – Standard Data Exchange Format Specification June 1995

Appendix B – Boring Logs B-101 through B-107 (Inclusive) 02 March 1998 through 04 March 1998

Appendix C – Lead Survey Arvin Gym 1993

Appendix D – ACM Survey

* Lead Survey and ACM Survey which were previously prepared for the entire existing Arvin Gym are included here for reference. Portions of the Arvin Gym have been subsequently demolished. Room numbers in the survey correspond to room numbers on the D Series Drawings.

-- END OF PROJECT TABLE OF CONTENTS --

SECTION 01010

SUMMARY OF WORK

PART 1 GENERAL

1.1 PROJECT IDENTIFICATION AND DESCRIPTION OF WORK

1.1.1 Project Identification

The name of the Project on Contract Documents is Arvin Cadet Physical Development Center, Phase 2/3.

The project consists of the demolition and removal of selected portions of the existing Arvin Cadet Physical Development Center (Arvin CPDC), also known as building 727, sitework, utilities, abatement of asbestos containing materials, selective abatement of lead based and lead containing paints (where dismantling of steel is required) to permit demolition, removal of PCB containing ballasts and transformers, and removal of mercury containing lamps. Demolition and removal of the existing portions of the Arvin CPDC shall include the demolition and removal of the existing construction with non-friable asbestos containing materials in place, lead containing and lead based paints in place. All building debris resulting from the demolition and removal shall be considered Construction and Demolition (C+D) debris and disposed of at an approved category 360 landfill.

Phase 2/3 also consists of the actual new construction of facilities and limited renovation. Phase 2/3 will include the following key initiatives.

1. Rock removal from the ledge condition at the western edge of the site to provide a site for new construction.
2. Selective demolition of the North Gym Lobby to provide room for new construction.
3. Construction of new facilities in the two above mentioned areas.
4. Seismic up-grade, code mandated up-grades and renovations to the existing North Entry which will integrate this existing historically significant part of the Arvin complex with the new construction.
5. Extensive site work on all sides of the building to reintegrate the new Arvin Cadet Physical Development Center into the existing campus fabric.
6. Options for programmatic and code mandated up-grades and renovations to the Hayes Gym which will integrate this existing historically significant part of the Arvin complex with the new construction.
7. Options as described in Section 01030 to add six racquetball courts, upgraded floor finishes, upgraded railings and various equipment and FF&E items.
8. See Section 02220, DEMOLITION for requirements of work in

historically significant buildings.

1.1.2 Contractor

Where the terms "by Electrical Contractor", "by Plumbing Contractor", "by HVAC Contractor, "by Mechanical Contractor" or "by Others" appear, they shall be construed to refer to the Contractor for this Work. Where such terms are used they are not intended to prescribe responsibility or to differentiate scope of work of the Contractor's sub contractors, sub-sub contractors nor any lower tier subcontractor.

1.2 SUBMITTALS

Government approval is required for submittals with a "GA" designation; submittals having an "FIO" designation are for information only. Unless otherwise indicated, primary reviewer for these submittals will be the Contracting Officer. The following shall be submitted in accordance with Section 01330 SUBMITTAL PROCEDURES:

SD-07 Schedules

Videography Schedule; FIO; Interruption Plan and Schedules; GA.

Submit proposed videography schedule, indicating areas and types of work that will be videotaped.

Submit interruption plans and schedules indicating disruption of services.

SD-09 Reports

List of Information; FIO.

Complete list of tapes, along with all written text and information on all video tapes shall be submitted in electronic format.

SD-14 Samples

Videographers Work; FIO

Submit samples of the videographers work, demonstrating the videographer's competence and effectiveness in recording construction activity.

SD-18 Records

Progress Video Tapes; FIO

Record Video Tapes; FIO

Submit progress video tapes monthly for review.

At completion of the Project, submit a cumulative record video tape of the complete video documentation of the Project.

1.3 CONTRACTOR'S USE OF PREMISES

Contractor shall limit his use of the premises for Work and for storage, to allow for:

1. Government occupancy of existing facilities to remain.
2. Public Use.

Coordinate use of premises under direction of Contracting Officer. Assume full responsibility for the protection and safekeeping of Products under this Contract, stored on the site. Move any stored Products, under Contractor's control, which interfere with operations of the Government. Obtain and pay for the use of additional storage or work areas needed for operations.

The Contract Site shall be as shown on the Drawings, and shall include the entire area bound by the "Contract Limit" or "Limit of Work" lines as well as all areas outside of the Limit of Work Lines when required for performance of work under this Contract. The limit of work line may change according to the phasing requirements specified elsewhere in the Contract Documents. Damage to existing work caused by operations under this Contract shall be repaired at Contractor's expense, as specified or approved by the Contracting Officer.

Any street, paving, curb and/or sidewalk damaged as the result of work under this Contract, whether within or outside the limits of the Work, shall be repaired and/or replaced with new matching construction under this Contract.

Where existing curbs or walks are to remain and after new curbs or walks are constructed and tracking is required over them, they shall be suitably protected in an approved manner.

Trenching and other work outside construction limits shall be expedited to fullest extent and carried out with minimum of inconvenience to normal operations of Government and public traffic. Walks, paved or landscaped areas over which temporary driveways cross shall, upon completion of the Work, be restored to their original condition with new construction. Temporary roadways shall be bridged over trenched areas.

Provide continuous, lawful, safe, adequate and convenient access to the site. Access to site shall generally be via existing roadways and paved surfaces indicated in the Drawings which Contractor shall maintain and restore to original condition. Contractor shall construct and maintain in good usable condition temporary roads and appurtenances as required, and when no longer required, remove temporary construction and restore such areas to their original condition.

The General Contractor and all subcontractors shall confine operations at the site to areas permitted by the phasing schedule, law and ordinances, permits, and Contract limit lines.

Do not unreasonably encumber site with materials or equipment.

Do not load structure with weight that will endanger structure. Do not

permit materials and fabricated work to be stacked on, or be transported over, floor and roof construction in such a manner as to stress any construction beyond the designed live loads. Assume full responsibility for protection and safekeeping of products stored on premises. Obtain and pay for use of additional storage or work areas needed for operations. Limit use of site to work and storage. Move any stored products which interfere with operations of Government or other contractors.

Do not store foamed polystyrene, polyurethane or like materials within the existing buildings or in enclosed spaces. Storage of such materials outside the building shall be with proper precautionary measures taken against fire.

General Contractor shall be responsible for adequate site drainage and erosion control during the entire construction period and shall use any appropriate temporary means which does not adversely affect construction progress or abutting property.

1.4 GOVERNMENT'S OCCUPANCY

1.4.1 Full Government Occupancy

The Government will occupy the site and portions of the existing building during the entire work of this Contract. Perform work under the Contract in a manner so as not to interfere with the Government's operations. Cooperate with the Government at all times in order to minimize conflicts and facilitate Government's usage.

1.4.2 Means of Egress

The Contractor shall maintain means of egress from all portions of the occupied buildings at all times during the work of this Contract.

1.5 SPECIAL REQUIREMENTS

1.5.1 Time

Time is of the essence. Contractor is required to carefully coordinate and time the Work. Dates for Substantial Completion are of a great importance to the Government. Failure to execute the Work within the required time table may cause severe disruptions to the Governments operations and jeopardize funding and scheduling of future phases of Work.

See Section 00800, Special Contract Requirements for additional requirements.

The building will remain in operation during the construction of this project. See other requirements specified under Section 00800, Special Contract Requirements.

1.6 TEMPORARY IMPROVEMENTS AND CONTINUITY OF SERVICES

1.6.1 Occupied Spaces

During construction, the Contractor shall provide all work necessary to allow the Government-occupied portions of the building to operate normally. The work required for such provisions is comprised in general of two parts:

1. Temporary Improvements, and
2. Continuity of Services.

1.6.2 Temporary Improvements and Continuity of Services

Temporary Improvements and Continuity of Services are intended to maintain Government's necessary services and are not intended to replace any requirements stipulated in Section 01500, TEMPORARY CONSTRUCTION FACILITIES.

Upon completion of each Phase, remove the work associated with Temporary Improvements and Continuity of Services and rebuild area and associated Mechanical and Electrical systems.

Existing building services, Temporary Improvements and items associated with Continuity of Services may be removed upon completion of newly installed systems, and Contracting Officer's approval.

During construction, maintain continuity of services to occupied areas by providing temporary extensions, temporary relocations, or any other means to maintain continuity of mechanical and electrical services.

Unless otherwise specified, the Contractor shall provide all necessary work in order to maintain the continuity of service of the following systems:

1.6.2.1 Means of egress, including but not limited to:

a. Exit discharge
b. Exit access ways.
c. Exit signage and lighting.
d. In the event that, due to construction means and methods, a change is required in an exitway, the Contractor shall immediately notify the Contracting Officer and shall not proceed without approval.

1.6.2.2 Structural and Architectural Integrity

The Contractor shall not employ any means or methods of construction which will affect the structural integrity of the occupied part of the building. The Contractor shall brace, shore, and secure all parts of the occupied area to ensure and preserve its structural and architectural integrity.

1.6.2.3 Maintain continuity of Mechanical and Electrical Systems, including but not limited to:

a. Area drains.
b. Water.
c. Storm and sanitary sewer.
d. Steam.
e. Rain leaders and drains.
f. Domestic hot water.

g. Fire alarm.
h. Electric power.
i. Telephone.
j. Computer networking.
k. Emergency power.
l. Energy management (DDC)
m. Fire protection and sprinkler systems.

1.6.2.4 Coordination and Timing

The Contractor shall coordinate and time the work required by subcontractors for the provision of Continuity of Services.

Schedule, organize and conduct subcontractor's operations to minimize interruption of such services. Perform work during vacations, weekends, after hours and other times of vacancy as required.

Whenever interruption of such time cannot be avoided, even by use of off-hours labor, notify the Government in advance; interrupt services for as brief a period as possible, and provide alternate sources of service and temporary improvements without delay so that Government can resume normal operations. No interruptions will be permitted between 3:00 PM and 6:30 PM local time during days when the Academy is in session.

a. Contractor shall prepare interruption plans and schedules detailing the disruption of services. Such plans and schedules shall require the approval from the Contracting Officer and the Government prior to performing the Work. Refer to Section 00800, SPECIAL CONTRACT REQUIREMENTS.

1.7 PHASING OF THE WORK

The Construction Sequence for the Project shall be phased. Refer to Drawings and Section 00800, Special Contract Requirements for the descriptions of each phase.

1.8 VIDEO DOCUMENTATION OF CONSTRUCTION

Provide videographic documentation of progress of construction as specified in this Article. See additional requirements specified in Section 00800, SPECIAL CONTRACT REQUIREMENTS.

1.8.1 Quality Assurance

Videography shall be by a competent videographer, familiar with architecture and means and methods of construction, acceptable to the Contracting Officer.

1. Unless there are extenuating circumstances noted and accepted by the Contracting Officer retain the same videographer throughout the period of construction.

1.8.2 Videography Schedule:

Video site and construction throughout the progress of the work. Videotape on a monthly basis (or other desirable period) during construction, and upon completion of the Work. Videographer shall be on site for a minimum of two hours each videotaping period. In addition, videotape at the beginning and completion of:

1. Site clearing;
2. Demolition;
3. Asbestos/lead abatement
4. Excavation work;
5. Foundation work;
6. Structural framing;
7. Building Enclosure.
8. Interior finishes.
9. Finish sitework and landscaping.
10. Work in existing North Entry (Building B) and Hayes Gym (Building A).

1.8.3 Submit progress tape monthly, for Contracting Officer's review and approval.

1.8.4 At Substantial Completion of the work, deliver to Contracting Officer a cumulative record tape of the complete video documentation of the work.

1.8.5 Videotape: Master tape shall be High Resolution MiniDV, SVHS, Hi8, or other commercial format with minimum 400 lines of horizontal resolution minimum.

1. Progress and Record Tapes: VHS Format.

1.8.6 Video Technique:

1. Furnish a factual videotape presentation of construction.
2. Videotape shall have correct exposure and focus, high resolution and sharpness, maximum depth of field, and minimum distortion.
3. Views and details shall be identified by narration as well as transcripted written copy.
4. Video shall be shot from a tripod unless conditions preclude.
5. Off camera micro-phone shall be used.

1.8.7 Video Views:

1. Consult with Contracting Officer for each videotaping session for instructions on views required.
2. Videotape from one or more viewpoints to adequately show the progress of construction and condition of the Project.
3. Videotape views of the building and site work at each specified time.
4. At each taping, take at least one sequence from a viewpoint previously used.

1.8.8 Products to be Provided:

1. At each video taping, record time, date, temperature, the weather

conditions and the forecast for the following 24 hours.

2. Original tape shall have date on each frame.
3. Include in each video taping, a discussion with the Contractor, project representative, or quality control personnel on work progress, work planned for the following weeks, and possible problems and difficulties requiring resolution.
4. Record ongoing site activity including storage of materials.

1.8.9 Videotape Identification:

1. Identify each tape with the date(s) recorded; the project name and location; Contracting Officer's name and project number; phase of construction; videographer's name and address; and the videographer's identification number of the videotape.

1.8.10 Submission of Original Videotapes

1. The original videotapes, all masters, and all copies shall be turned over to the Government at Substantial Completion.

PART 2 PRODUCTS

2.1 Not Used

PART 3 EXECUTION

3.1 Not Used.

-- End of Section --

SECTION 01025

MEASUREMENT AND PAYMENT

PART 1 GENERAL

1.1 DESCRIPTION

The items listed below beginning with paragraph 4 refer to and are the same unit priced pay items listed in the Price Schedule. They constitute all of the unit priced items for the completion of the work. No direct or separate payment will be made for providing demolition work or construction work of items not indicated on drawings. Compensation for such services shall be included in the prices stipulated for unit price pay items listed herein, or are included in item 001.

1.2 COSTS

All costs for each unit bid price will be deemed to include an amount considered by Contractor to be adequate to cover Contractor's overhead and profit for each separately identified item.

1.3 SUBMITTALS

Government approval is required for submittals with a "GA" designation; submittals having an "FIO" designation are for information only. Unless otherwise indicated, primary reviewer for these submittals will be the Contracting Officer (CO). The following shall be submitted in accordance with Section 01330 SUBMITTAL PROCEDURES:

SD-01 Data

Quantity Surveys; FIO.

Quantity surveys shall be performed by the Contractor in accordance with the requirements specified in the Special Contract Clauses, Section 00800.

Submit originals of all field notes and all other records relating to quantity surveys.

1.4 RELATED REQUIREMENTS

1.4.1 Contract Clauses

00700.64 - Payments under fixed price construction contracts.

PART 2 PRODUCTS

2.1 ESTIMATE OF QUANTITIES

The Variation in Estimated Quantities-Subdivided items clause is applicable only to Base Bid Item Nos. 0002 through 0024 inclusive, and to Option No. 005.

2.1.1 Subdivided Items Clause

Variation from the estimated quantity in the actual work performed under any second or subsequent sub-item or elimination of all work such a second or subsequent sub-item will not be the basis for an adjustment in contract unit price.

Where the actual quantity of work performed for items 002 through 020 and 005, inclusive, is less than 85% for the quantity of the first sub-item listed under such item, the Contractor will be paid at the contract unit price for the sub-item for the actual quantity of work performed and, in addition, an equitable adjustment shall be made in accordance with the clause FAR 52.211-18, Variation in Estimated Quantities.

If the quantity of work performed under items nos. 002 through 020 and 005, inclusive exceeds 115% or is less than 85% of the total estimated quantity of the sub-items under that item, and/or if the quantity of work performed under the second sub-item or any subsequent sub-items under item nos. 002 through 020 and 005, exceeds 115% or is less than 85% of the estimated quantity of any such sub-item, and if such variations causes an increase or a decrease in the time required for performance of this contract the contract completion time will be adjusted in accordance with the clause 52-221-18 Variation in Estimated Quantities.

2.1.2 Mobilization and Administrative Costs

Contractor shall include all mobilization and administrative costs within the price for the first sub-item. Second sub-item shall only include labor, material and equipment costs required to perform second sub-item work.

2.2 FILL AND BACKFILL MATERIALS

Where any unit price item requires fill/backfill materials as a part of the unit price item, such fill/backfill materials shall be measured to return affected area to existing grade. Fill/backfill materials required to achieve required grades shall be included in Item 001.

PART 3 EXECUTION

3.1 ADJUSTMENT OF UNIT PRICES FOR INCREASE OR DECREASE OF ESTIMATED QUANTITIES

See CONTRACT CLAUSES Section 00700.

PART 4 MEASUREMENT AND PAYMENT

4.1 BASE BID ITEMS 002, 003, 004 and OPTION ITEM 005

Base Bid Item 002 - Asbestos Containing Roofing System Materials

Base Bid Item 003 - Asbestos Containing Floor Tile & Mastic
Base Bid Item 004 - Asbestos Containing Window Caulking and Glazing Compounds

Option Item 005 - Window Sash with Asbestos Containing Caulk and Glazing Compounds

Abate and properly dispose of off-site any material containing asbestos or material which was contaminated due to the presence of asbestos in the materials found to contain asbestos. Proper testing is required before the asbestos abatement work is authorized. Work shall be provided in accordance with the Specifications including Sections 01410, 02070, 02080, 02090 and 02120. The work includes all labor, materials, tools, and equipment for any demolition related to the abatement of the above items.

4.1.1 MEASUREMENT

Base Bid Item 002 - Asbestos Containing Roofing System Materials - Measurement shall be per square foot of surface area per 6" of thickness including 2 complete 4 ply built up roofing systems and insulation with all related flashing and fasteners and complete removal of bitumen from structural deck.

Base Bid Item 003 - Asbestos Containing Floor Tile & Mastic - Measurement shall be per square foot of surface area per 1/8" tile thickness with up 1/8" thickness of mastic.

Base Bid Item 004 - Asbestos Containing Window Caulking and Glazing Compounds - Measurement shall be per linear foot of glazing compound and per linear foot of caulking. Glazing compound shall include exterior 3/4" by 3/4" glazing compound bead adhered to substrate two surfaces along with 3/4" by 1/4" interior glazing compound bead adhered to substrate on three surfaces. Caulking shall include 1/2" by 1/2" bead adhered to substrate on two surfaces.

Option Item 005 - Window Sash with Asbestos Containing Caulk and Glazing Compounds - Measurement shall be per square foot of surface area parallel to the plane of the glass and shall include wood framing, blocking, glazing compound, glass, caulk/sealant, and the like.

4.1.2 PAYMENT

Payment for the asbestos abatement work will be made at the unit price bid and will constitute full compensation for furnishing all labor, materials, testing, monitoring, tools, equipment necessary for the abatement, transportation and proper off post disposal of the items as specified. The methods of abatement, containments, location and areas indicated on the drawings are provided for information only. All other ACM are to be considered non-friable and are to be included in Item 001.

4.2 BASE BID ITEM 006, DEMOLITION OF PCB TYPE LIGHTING BALLASTS:

4.2.1 Measurement

Measurement shall be per lighting ballast, regardless of size.

4.2.2 Payment

Payment for demolition of the existing PCB type lighting ballasts and all other items associated with such work will be made at the unit price bid and will constitute full compensation for furnishing all labor, materials, testing, monitoring, tools and equipment necessary for the demolition, transportation and proper off post disposal of PCB type lighting ballasts. Work shall be provided in accordance with the Specifications including Sections 01410, 02070, 02080, 02090 and 02120.

4.3 BASE BID ITEM 007, DEMOLITION OF MERCURY CONTAINING LAMPS:

4.3.1 Measurement

Measurement shall be per lamp or bulb of fluorescent or HID type regardless of size.

4.3.2 Payment

Payment for demolition of the existing mercury containing lamps will be made at the unit price bid and will constitute full compensation for furnishing all labor, materials, testing, monitoring, tools and equipment necessary for the demolition, transportation and proper off post disposal of mercury containing lamps. Work shall be provided in accordance with the Specifications including Sections 01410, 02070, 02080, 02090 and 02120.

4.4 BASE BID ITEM 008 DEMOLITION OF PCB CONTAINING TRANSFORMER OIL AND CARCASS:

4.4.1 Measurement

Measurement shall be per gallon of removed existing PCB oil. PCNB Oil used for flushing or other purposes shall not be measured and shall be defined as "Materials" for payment.

4.4.2 Payment

Payment for demolition of PCB containing transformer oil, carcass and all other items associated with such work will be made at the unit price bid and will constitute full compensation for furnishing all labor, materials, testing, monitoring, tools and equipment, necessary for the removal, transportation and proper off-post disposal of PCB containing transformer oil, transformer carcass(s) and all other items associated with such work. Work shall be provided in accordance with the Specifications including Sections 01410, 02070, 02080, 02090 and 02120.

4.5 BASE BID ITEM 009 AND 010, ROCK EXCAVATION

BASE BID ITEM 009 - Rock Excavation for Trenches
BASE BID ITEM 010 - Rock Excavation

4.5.1 Measurement

Measurement for rock excavation shall be per cubic yard in place before excavation, see the specifications and drawings for payment lines.

4.5.2 Payment

Payment for rock excavation will be made at the unit price bid and will constitute full compensation for furnishing all labor, materials, tools and equipment necessary for the excavation, transportation and proper off government property disposal of rock. Work shall be in accordance with the Specifications including Section 02222.

4.5.3 Disposal

All excavated rock shall be transported and disposed of off government property. All costs for disposal off government property shall be included in the unit price noted above.

4.6 BASE BID ITEM 0011, EXCAVATED MATERIAL (OTHER THAN ROCK)

4.6.1 Measurement

Measurement of excavated material shall be per cubic yard in place before excavation. This line item is for the excavation, as directed by the Contracting Officer, of unsuitable material beyond the limits of excavation required by the plans and specifications. Excavation for utility trenches and utility structures shall not be included in this base bid item, but shall be included in Item 001. Excavated material is defined for this work as; existing earth and other fill materials not defined as rock in Specification Section 02222. All excavated materials are deemed unsatisfactory materials as defined in Specifications Section 02221 and 02316 and are to be disposed of off government property. Work shall be in accordance with the Specifications including Section 02221.

4.6.2 Payment

Payment for excavation and proper off post disposal of excavated material other than rock will be made at the unit price bid and will constitute full compensation for furnishing all labor, materials, dewatering, tools and equipment necessary for the excavation, transportation and proper off post disposal of excavated material.

4.7 BASE BID ITEM 012, EXCAVATED MATERIAL (OTHER THAN ROCK) WITH REPLACEMENT STRUCTURAL FILL

4.7.1 Measurement

Measurement of excavated material and replacement structural fill shall be per cubic yard of excavated material in place before excavation. This line item is for the excavation, as directed by the contracting officer, of unsuitable material beyond the limits if excavation required by the plans and Specs. Excavation for utility trenches and utility structures shall not be included in this base bid item, but shall be included in Item 001. Excavated material is defined for this work as; existing earth and other

fill materials not defined as rock in Specification Section 02222. All excavated materials are deemed unsatisfactory materials as defined in Specifications Section 02221 and 02316 and are to be disposed of off government property. Structural fill shall include provision, placement and compaction to properly and completely fill void of excavated material. Work shall be in accordance with the Specifications including Section 02221.

4.7.2 Payment

Payment for excavation and proper off post disposal of excavated material other than rock will be made at the unit price bid and will constitute full compensation for furnishing all labor, materials, dewatering, tools and equipment necessary for the excavation, transportation, proper off post disposal of excavated material, and the provision of compacted structural fill to properly and completely fill the void of excavated material.

4.8 BASE BID ITEM 013A AND 013B, ROCK BOLTING

BASE BID ITEM 013A - 142 KIP CAPACITY ROCK BOLTS FOR STABILIZATION OF EXISTING ROCK FACES COMPLETE

BASE BID ITEM 013B - 40 KIP CAPACITY ROCK BOLTS FOR FOUNDATION HOLD DOWN COMPLETE

4.8.1 Measurement

Measurement shall be per linear foot of installed length of rock bolts. No payment shall be made for rock bolts failing required tests.

The contractor shall assume that twelve (12) rock bolts with a total combined length as indicated in the Price Schedule shall be included in unit price item 013A. The contractor shall also assume that all rock bolts for stabilization of existing rock faces shall be installed not more than 70 feet above the adjacent working surface. The location of rock bolts for stabilization of existing rock faces shall be as directed by the Contracting Officer.

Rock bolts for foundation hold down, unit price item 013B, shall be provided as indicated.

4.8.2 Payment

Payment for rock bolting will be made at the unit price bid and will constitute full compensation for furnishing all labor, materials, tools, testing and equipment necessary for the complete provision of rock bolting. Work shall be provided in accordance with the Specifications including Section 02223.

4.9 BASE BID ITEM 014A, 014B, 014C, AND 014D, DRILLED REINFORCED CONCRETE CAISSONS

BASE BID ITEM 014A - 30 INCH (2'-6") NOMINAL DIAMETER DRILLED REINFORCED CONCRETE CAISSONS COMPLETE

BASE BID ITEM 014B - 42 INCH (3'-6") NOMINAL DIAMETER DRILLED REINFORCED CONCRETE CAISSONS COMPLETE

BASE BID ITEM 014C - 54 INCH (4'-6") NOMINAL DIAMETER DRILLED REINFORCED CONCRETE CAISSONS COMPLETE

BASE BID ITEM 014D - 66 INCH (5'-6") NOMINAL DIAMETER DRILLED REINFORCED CONCRETE CAISSONS COMPLETE

4.9.1 Measurement

Measurement shall be per linear foot at centerline of installed length of drilled reinforced concrete caissons of the indicated nominal diameters.

The contractor shall assume that 3 caissons with a total combined length as indicated in the Price Schedule shall be included in unit price item 014A, 26 caissons with a total combined length as indicated in the Price Schedule shall be included in unit price item 014B, 9 caissons with a total combined length as indicated in the Price Schedule shall be included in unit price item 014C, and 10 caissons with a total combined length as indicated in the Price Schedule shall be included in unit price item 014D. The contractor shall assume that all caissons shall be a minimum of 3 feet in length and a maximum of 30 feet in length.

4.9.2 Payment

Payment for drilled reinforced concrete caissons will be made at the unit price bid and will constitute full compensation for providing all excavation, removal, disposal, labor, transportation, materials, tools, testing, inspection and equipment necessary for the complete provision of drilled reinforced concrete caissons of the indicated diameters. Work shall be provided in accordance with the Specifications including Section 02466. No payment will be made for rejected caissons.

4.10 BASE BID ITEM 015 TEMPORARY STEEL CASINGS LEFT IN PLACE

4.10.1 Measurement

Measurement shall be per pound of steel casing for temporary steel casing left in place for all caisson diameters.

4.10.2 Payment

Payment for temporary steel casing left in place will be made at the unit price bid and will constitute full compensation for providing all labor, transportation, materials, tools, disposal, removal, testing, inspection and equipment necessary for the complete provision of temporary steel casing left in place for all caisson diameters. Payment for temporary steel casings not left in place shall be included in unit price items 014A, 014B, 014C and 014D.

Work shall be provided in accordance with the Specifications including Section 02466. No payment will be made for temporary steel casing left in place as part of rejected caissons.

4.11 BASE BID ITEM 016 PROOF TEST HOLES

4.11.1 Measurement

M Measurement shall be per proof test hole of size and type specified in section 02466 DRILLED FOUNDATION CAISSONS. All proof test holes shall be assumed to be 66 inches in depth.

4.11.2 Payment

Payment for proof test holes will be made at the unit price bid and will constitute full compensation for furnishing all labor, materials, tools, inspection and equipment necessary for the complete provision of proof test holes. Work shall be provided in accordance with the Specifications including Section 02466.

4.12 BASE BID ITEM 017 - LEAN CONCRETE FILL FOR FOUNDATION BEARING

4.12.1 Measurement

Measurement shall be per cubic yard in place for cast-in-place lean concrete fill required due to variations in under-laying existing rock. This line item is for lean concrete fill to provide bearing for building foundations where existing rock is below required elevations. Lean concrete fill required due to excavation of rock beyond the depth(s) directed by the Contracting Officer and dimensions indicated on the Drawings or called for by the Specifications shall not be included in this base bid item, but shall be included in Item 001. Lean concrete fill for foundation bearing shall include provision, forming, placement, consolidation, and curing to properly and completely fill volumes required.

4.12.2 Payment

Payment for lean concrete fill for foundation bearing will be made at the unit bid price and will constitute full compensation for furnishing all labor, materials, tools, inspections, testing and equipment necessary for the complete provision of lean concrete fill for foundation bearing. Work shall be in accordance with the Specifications including Section 03300.

4.13 BASE BID ITEM 018 - STRUCTURAL CONCRETE FOR ADDITIONAL DEPTH FOR FOUNDATIONS

4.13.1 Measurement

Measurement shall be per cubic yard in place for cast-in-place structural concrete for additional depths required due to variations in under-laying existing rock. This line item is for cast-in-place structural concrete to provide additional depth for building foundations where existing rock is below required elevations. Cast-in place structural concrete required due to excavation of rock beyond the depth(s) directed by the Contracting Officer and dimensions indicated on the Drawings or called for by the Specifications shall not be included in this base bid item, but shall be included in Item 001. Cast-in-place structural concrete for additional

depths shall include provision, placement, consolidation, and curing to properly and completely fill volumes required. Reinforcing and formwork for additional depth for building foundations shall be included in items 019 and 020.

4.13.2 Payment

Payment for cast-in-place structural concrete for additional foundation depths will be made at the unit bid price and will constitute full compensation for furnishing all labor, materials, tools, inspections, testing and equipment necessary for the complete provision of cast-in-place structural concrete for additional foundation depths. Work shall be in accordance with the Specifications including Sections 03100, 03200 and 03300.

4.14 BASE BID ITEM 019 - STEEL REINFORCING FOR ADDITIONAL DEPTH FOR FOUNDATIONS

4.14.1 Measurement

Measurement shall be per pound in place for steel reinforcing for additional depths required due to variations in under-laying existing rock. This line item is for steel reinforcing for cast-in-place structural concrete to provide additional depth for building foundations where existing rock is below required elevations. Steel reinforcing for cast-in-place structural concrete required due to excavation of rock beyond the depth(s) directed by the Contracting Officer and dimensions indicated on the Drawings or called for by the Specifications shall not be included in this base bid item, but shall be included in Item 001. Steel reinforcing for cast-in-place structural concrete for additional depths shall include provision, fabrication, placement, and incorporation to properly reinforce cast-in-place concrete required. Cast-in-place structural concrete and formwork for additional depth for building foundations shall be included in items 018 and 020.

4.14.2 Payment

Payment for steel reinforcing for cast-in-place structural concrete for additional foundation depths will be made at the unit bid price and will constitute full compensation for furnishing all labor, materials, tools, inspections, testing and equipment necessary for the complete provision of steel reinforcing for cast-in-place structural concrete for additional foundation depths. Work shall be in accordance with the Specifications including Sections 03100, 03200 and 03300.

4.15 BASE BID ITEM 020 - FORMWORK FOR ADDITIONAL DEPTH FOR FOUNDATIONS

4.15.1 Measurement

Measurement shall be per square foot of formed surface for additional depths required due to variations in under-laying existing rock. This line item is for formwork for cast-in-place structural concrete to provide additional depth for building foundations where existing rock is below required elevations. Formwork for cast-in-place structural concrete

required due to excavation of rock beyond the depth(s) directed by the Contracting Officer and dimensions indicated on the Drawings or called for by the Specifications shall not be included in this base bid item, but shall be included in Item 001. Formwork for cast-in-place structural concrete for additional depths shall include provision, fabrication, placement, preparation and removal to properly form cast-in-place concrete required. Cast-in-place structural concrete and steel reinforcing for additional depth for building foundations shall be included in items 018 and 019.

4.15.2 Payment

Payment for formwork for cast-in-place structural concrete for additional foundation depths will be made at the unit bid price and will constitute full compensation for furnishing all labor, materials, tools, inspections, testing and equipment necessary for the complete provision of formwork for cast-in-place structural concrete for additional foundation depths. Work shall be in accordance with the Specifications including Sections 03100, 03200 and 03300.

4.16 BASE BID ITEM 021 MASONRY CLEANING

BASE BID ITEM 021A - MASONRY CLEANING METHOD 1) WATER WITH BRUSHES

BASE BID ITEM 021B - MASONRY CLEANING METHOD 2) WATER WITH MILD DETERGENT

BASE BID ITEM 021C - MASONRY CLEANING METHOD 3) WATER WITH STRONGER DETERGENT.

BASE BID ITEM 021D - MASONRY CLEANING METHOD 4) WATER WITH STRONGER DETERGENT PLUS AMMONIA

BASE BID ITEM 021E - MASONRY CLEANING METHOD 5) WATER WITH STRONGER DETERGENT PLUS VINEGAR (NOT TO BE USED ON CALCAREOUS MASONRY)

BASE BID ITEM 021F - MASONRY CLEANING METHOD 6) STRONGER CHEMICAL CLEANERS

BASE BID ITEM 021G - MASONRY PAINT REMOVAL

4.16.1 Measurement

Measurement shall be per square foot of surface area measured parallel to the plane of the surface (base plane area). Reveals, mouldings, arises and the like of up to 1" in any dimension shall be included in the base plane area. The surface area of reveals, mouldings, arises and the like projecting more that 1" shall be the sum of the areas of the contours/surfaces of the reveals, mouldings, arises and the like.

4.16.2 Payment

Payment for masonry cleaning shall be made at the unit price bid and will constitute full compensation for providing all labor, transportation, materials, tools, testing, protection, inspection and equipment necessary for the complete provision of masonry cleaning of the indicated types.

Work shall be provided in accordance with the Specifications including Section 04900.

4.17 BASE BID ITEM 022 PLASTER PATCHING

4.17.1 Measurement

Measurement shall be per square foot of surface area measured parallel to the plane of the surface (base plane area). Reveals, mouldings, arises and the like of up to 1" in any dimension shall be included in the base plane area. The surface area of reveals, mouldings, arises and the like projecting more that 1" shall be the sum of the areas of the contours/surfaces of the reveals, mouldings, arises and the like.

4.17.2 Payment

Payment for plaster patching shall be made at the unit price bid and will constitute full compensation for providing all labor, transportation, materials, tools, testing, protection, inspection and equipment necessary for the complete provision of plaster patching. Work shall be provided in accordance with the Specifications including Section 09215.

The work of this item shall not include the removal and replacement of materials required to incorporate new work, to adjust existing work to incorporate new work, to incorporate removed and relocated existing work such as mouldings and trims, or the like, which shall be included in item 001.

-- End of Section --

SECTION 01030

OPTIONS

PART 1 GENERAL

1.1 SUMMARY

This section specifies administrative and procedural requirements for options along with their technical descriptions.

1.2 DEFINITIONS

"Option" means a unilateral right in a contract by which, for a specified time, the Government may elect to purchase additional supplies or services called by the contract, or may elect to extend the term of the contract. Notice To Proceed of individual options as noted below shall not affect the Completion Date of the base Contract as determined by the base Contract Notice to Proceed.

1.3 GENERAL

The extent of work for each option is indicated on the drawings. In the event of any differences between the drawings and the options described below, the descriptions below shall govern.

1.4 COORDINATION

The Contractor shall coordinate related work and modify or adjust adjacent work as necessary to ensure that work affected by each exercised option is complete and fully integrated into the project. The Contractor shall provided appropriate detailing to properly terminate or transition from option to base bid work and option to option work. The Contracting Officer shall review and approve in writing any and all Contractor generated documents. The Contracting Officer shall review and approve in writing any and all Contractor generated documents.

1.5 NOTIFICATION

Each optional bid item, if awarded, will be awarded according to the schedule below. However, the Government is under no obligation to award any optional bid item.

Optional bid item OP01 if awarded, will be awarded by the Government at award of the base Contract.

Optional bid item OP02 if awarded, will be awarded by the Government at award of the base Contract.

Optional bid item OP03 if awarded, will be awarded by the Government within

540 calendar days after Notice to Proceed for the base Contract.

Optional bid item OP04 if awarded, will be awarded by the Government within 540 calendar days after Notice to Proceed for the base Contract.

Optional bid item OP05 if awarded, will be awarded by the Government within 700 calendar days after Notice to Proceed for the base Contract.

Optional bid item OP06 if awarded, will be awarded by the Government at award of the base Contract.

Optional bid item OP07 if awarded, will be awarded by the Government at award of the base Contract.

Optional bid item OP08 if awarded, will be awarded by the Government at award of the base Contract.

Optional bid item OP201 if awarded, will be awarded by the Government within 270 calendar days after Notice to Proceed for the base Contract.

Optional bid item OP206 if awarded, will be awarded by the Government at award of the base Contract.

Optional bid item OP207 if awarded, will be awarded by the Government within 360 calendar days after Notice to Proceed for the base Contract.

Optional bid items OP101 through OP113 if awarded, will be awarded by the Government within 800 calendar days after Notice to Proceed for the base Contract.

1.6 SCHEDULE

A "Schedule of Options" is included as part of this section. Specification sections, referenced in the schedule contain requirements for materials and methods necessary to achieve the work described under each option.

Include as part of each option, miscellaneous devices, accessory objects and similar items incidental to or required for a complete installation whether or not mentioned as part of the option.

PART 2 PRODUCTS NOT USED

PART 3 EXECUTION

3.1 SCHEDULE OF OPTIONS

3.1.1 Option No. OP01: HAYES GYM SPRINKLERS

All the work necessary in providing a new and complete sprinkler system in Building A, Hayes Gym. See Drawings including F1.0A, F1.1A, F1.2A, F1.3A, & F1.4A and Specifications including Sections 13080, 13851, and 13930. Spaces to receive sprinklers include Fitness Room A102, Lobby Room A108, Fitness Room A103. Second Floor: Gymnasium Room A202. Third Floor: Running Track Room A308, Offices Room A302 and A303. Note that North and

South stair towers all floors and spaces within the towers, and First floor Lobby A108 are included in the option. Note that all Basement spaces are presently sprinklered.

3.1.2 Option No. OP02: HAYES GYM FIRST FLOOR

All the work necessary in providing in Building A, Hayes Gym, First Floor: Asbestos Abatement and Demolition of interior construction of Sports Medicine and Boxing Rooms and new interior construction of Fitness Room A102 and Fitness Room A103 Office A106, Storrage A107, Storage A109, Office A110, Sound A111 and Sound A112. See Drawings including drawings AR1.1A, D1.1A1, A1.1A1, M1.1A1, E1.1A1, E2.1A1, TC1.1A1, F1.1A1, and P1.1A1. Note that certain sprinkler heads are relocated to accommodate this plan.

3.1.3 Option No. OP03: RACQUETBALL COURTS SHELL SPACE

The purpose of this option is to construct shell space (usable for storage) to be fit-out as Racquetball Courts at a later date under a separate contract. See Drawing A1.4YS OP.

1. Architectural: Delete all the work necessary in providing in Building YS, Racquetball Courts (6) Y411, Y412, Y413, Y420, Y421, Y422 and Racquetball Corridor Y420. Delete the racquetball court kit work as Specified in Section 11491 Racquetball Courts. Provide all other work in these spaces in base bid except as noted below.

2. Mechanical: The provide supply and return ductwork mains with branch take-offs and sidewall type registers. Delete branch ducts and diffusers.
   Telecommunication: Provide conduit home runs with 12"x12" junction boxes at the perimeter of the space. Include pull cord in each conduit. Delete all other telecommunications work within the space.

3. Paging: Provide conduit home runs with 12"x12" junction boxes at the perimeter of the space and equipment storage room. Delete all other paging work within the space.

4. Electrical: Provide feeders and panelboards as shown. Delete duplex power outlets that are shown. Provide one duplex outlet per 25 feet of wall length, wired in a similar manner as shown on drawing E1.4YS. Delete lighting as shown. Provide strip fluorescent lighting fixtures at 10' by 12' on center, wired similar to the method shown on drawing E2.4YS. Fixture is type "A".

5. Plumbing: No change to plumbing.

6. Fire Protection: Provide sprinklers with upturned non-concealed heads in the locations shown instead of down-turned heads as specified in the base bid.

3.1.4 Option No. OP04: CLIMBING WALL RELATED ITEMS

All the preparatory work necessary to provide for future installation of the climbing wall by a separate vendor. Work includes providing structural steel tubes along grid lines K and 17 as shown on drawings A1.3ZE, A1.4ZE, A1.5ZE, and A2.38 Details 2 & 3. Provide glass enclosure wall and doors for Climbing Wall Z307 at third floor as shown on drawing A1.3ZE, Elevation A2.33 Details A4.56 and Specification Section 08810 and 08900. Provide lighting as shown on drawing E2.3ZE, E2.4ZE and E2.5ZE and Specification Section 16415.

3.1.5 Option No. OP05: STONE CREST

All the work necessary to install the Government supplied stone Crest on the north wall of Observation Room Z120 as shown on Drawing A1.1ZE between Grid lines C and D along Grid line 26 and on Interior Elevation A5.11ZE, Detail 17 and Detail 2/A3.45. Provide cleaning of the Crest as specified in Section 04900.

3.1.6 OP06: ADMINISTRATION AREA SHELL SPACE

The purpose of this option is to construct shell space (usable for storage) to be fit-out as the Administration Area at a later date under a separate contract. See Drawing A1.3ZEOP.

Architectural: This option deletes all internal walls including doors, side-lites and hardware. Floor and wall finishes and suspended ceilings are deleted. Media Room Z341: delete fixed seating. Provide all other work in these spaces in base bid except as noted below.

1. Mechanical: Provide supply ductwork mains from the air handling unit to the vav boxes as shown, provide return ductwork mains from the air handling unit return fan to the space as shown, provide all piping as shown, and supply ductwork mains from the vav boxes with branch take-offs and sidewall type diffusers. Delete branch ducts and diffusers. Thermostats to be provided with 50 feet of wire coiled and mounted to the side of their associated vav box.

2. Telecommunication: Provide conduit home runs with 12"x12" junction boxes at the perimeter of the space. Include pull cord in each conduit. Delete all other telecommunications work within the space.

3. Paging: Provide conduit home runs with 12"x12" junction boxes at the perimeter of the space and equipment storage room. Delete all other paging work within the space. Delete audio-visual and sound systems in media room, Z341.

4. Electrical: Provide feeders and panelboards as shown. Delete duplex power outlets that are shown. Provide one duplex outlet per 25 feet of wall length, wired in a similar manner as shown on drawing E1.3ZE. Delete lighting as shown. Provide strip fluorescent lighting fixtures at 10' by 12' on center, wired similar to the method shown on drawing E2.3ZE. Assume fixture

type "A".

5. Plumbing: Only plumbing stub-ups to fixture locations will be provided and capped. Fixtures are to be deleted.

6. Fire Protection: Provide sprinklers with upturned non-concealed heads in the locations shown in lieu of down-turned heads as specified in the base bid condition.

3.1.7 Option No. OP07: DPE WEIGHTS SHELL SPACE

The purpose of this option is to construct shell space (usable for storage) to be fit-out as the Weight Room at a later date under a separate contract. See Drawing A1.3YSOP. Room Y320.

1. Architectural: Delete all internal walls including doors, side-lites and hardware. Delete floor and wall finishes, suspended ceilings and light fixtures. Provide all other work in these spaces in base bid except as noted below.

2. Mechanical: Provide supply ductwork mains from the air handling unit to the vav boxes as shown, provide return ductwork mains from the air handling unit return fan to the space as shown, provide all piping as shown, and supply ductwork mains from the vav boxes with branch take-offs and sidewall type diffusers. Delete branch ducts and diffusers. Thermostats to be provided with 50 feet of wire coiled and mounted to the side of their associated vav box.

3. Telecommunication: Provide conduit home runs with 12"x12" junction boxes at the perimeter of the space. Include pull cord in each conduit. Delete all other telecommunications work within the space.

4. Paging: Provide conduit home runs with 12"x12" junction boxes at the perimeter of the space and equipment storage room. Delete all other paging work within the space. Delete audio-visual and sound systems.

5. Electrical: Provide feeders and panelboards as shown. Delete duplex power outlets that are shown. Provide one duplex outlet per 25 feet of wall length, wired in a similar manner as shown on drawing E1.3YS. Delete lighting as shown. Provide strip fluorescent lighting fixtures at 10' by 12' on center, wired similar to the method shown on drawing E2.3YS. Fixture is type "A".

6. Plumbing: Only plumbing stub-ups to fixture locations will be provided and capped. Fixtures are to be deleted.

7. Fire Protection: Provide sprinklers with upturned non-concealed heads in the locations shown in lieu of down-turned sprinklers specified in the base bid condition.

3.1.8 Option No. OP08: BOXING AND BOXING BALCONIES SHELL SPACE

The purpose of this option is to construct shell space (usable for storage) to be fit-out as Boxing Rooms at a later date under a separate contract. See Drawing A1.4YSOP. Rooms: Y435 Boxing, Y436 Boxing, Y439 Storage, Y444 Storage, Y437 Sound Closet, and Y438 Sound Closet.

1. Architectural: This option deletes all internal walls including doors, side-lites and hardware. Delete floor and wall finishes, suspended ceilings and light fixtures. Provide all other work in these spaces in base bid except as noted below.

2. Mechanical: Provide supply and return ductwork mains with branch take-offs and sidewall type diffusers. Delete branch ducts and diffusers.

3. Telecommunication: Provide conduit home runs with 12"x12" junction boxes at the perimeter of the space. Include pull cord in each conduit. Delete all other telecommunications work within the space.

4. Paging: Provide conduit home runs with 12"x12" junction boxes at the perimeter of the space and equipment storage room. Delete all other paging work within the space. Delete audio-visual and sound systems.

5. Electrical: Provide feeders and panelboards as shown. Delete duplex power outlets that are shown. Provide one duplex outlet per 25 feet of wall length, wired in a similar manner as shown on drawing E1.4YS. Delete lighting as shown. Provide strip fluorescent lighting fixtures at 10' by 12' on center, wired similar to the method shown on drawing E2.4YS. Fixture is type "A".

6. Plumbing: Only plumbing stub-ups to fixture locations will be provided and capped. Fixtures are to be deleted.

7. Fire Protection: Provide sprinklers with upturned non-concealed heads in the locations shown in lieu of down-turned heads as specified in the base bid condition.

3.1.9 Option No. OP201: TERRAZZO FLOORING

All the work necessary in providing Terrazzo Flooring (including bead blasting of concrete substrates to receive terrazzo) as an option to the stained concrete finish at the following locations. See Drawing A10.00 Floor Finish Options for the key plans of locations. See Specification Section 09445 for Terrazzo. See Finish Schedule in Section 09000.

1. Fourth Floor, Entry Y458, Corridor Y450, Corridor Y460, Corridor Z401 and Corridor Z470. See drawings A10.00, A9.06 Detail 1 - 6 for area to be replaced with Terrazzo.

2. Third Floor, Corridor Y350 Corridor Y360, Elevator Corridor Z370 and Corridor Z301. See drawings A10.00, A9.05 Detail 1, 2 & 4 for

area to be replaced with Terrazzo.

3. Second Floor, Corridor Y250, Corridor Y260, Elevator Corridor Z270 and Corridor Z201. See drawings A10.00, A9.04 Detail 2, 3, 4 & 6 for area to be replaced with Terrazzo.

4. First Floor, Corridor Y150, Corridor Y190, and Elevator Corridor Z170. See drawings A10.00, A9.02 Detail 5, 6 & 7 for area to be replaced with Terrazzo.

5. Basement Floor, Corridor Y060 and Elevator Corridor Z070. See drawings A10.00, A9.00 Detail 4 & 5 for area to be replaced with Terrazzo.

6. First floor, Entry Y103, South Lobby Y104 and Hayes First Floor Corridor Y101 and Stair #6 Y102 GFirst Floor Landings (up and down) and intermediate landing to Secfond Floor. See drawings A10.00, A9.01 Detail 1- 4 for area to be replaced with Terrazzo.

7. Second Floor Hayes Corridor Y201 and Corridor Y215 and Stair #6 Y202 Second Floor Landing. See drawings A10.00, A9.03 Detail 3-5 for area to be replaced with Terrazzo.

8. First floor Intramural Pool Overlook Area, Corridor Z101, Observation Z120, Lounge Z121, and Stair Z027 Intermediate Landing and Precast Terrazzo Risers and Treads. See drawings A10.00, A9.02 Detail 4 & 5 for area to be replaced with Terrazzo. See Detail 2/A6.24.

9. Basement floor, Intramural Pool Overlook Corridor Z001. See drawings A10.00, A9.00 Detail 4 & 6 for area to be replaced with Terrazzo.

3.1.10 Option No. OP206: TERRAZZO STAIR TREADS

All the work necessary in providing precast Terrazzo stair treads and risers as an option to stained concrete stair treads and painted risers in Building YN Central Stair #5, Room Numbers Y052, Y152, Y252, Y352, and Y452. Also included is Stair #6, Y102, Y202, Y302 precast terrazzo risers and treads from the first to third floor. See drawings A10.00, A1.0YN, A1.1YN, A1.2YN, A1.3YN, & A1.4 YN, A1.1YS, A1.2YS, and A1.3YS; Enlarged Plans A6.16, A6.17, Detail Drawing A6.23 Details and A6.24 Detail 2, and Specification Sections 09445 for Terrazzo and 09446 for Precast Terrazzo. See Finish Schedule in Section 09000.

3.1.11 Option No. OP207: OPTIONAL RAILING DESIGN

All the work necessary in providing the optional railing design at Central Stair #5, Y052, Y152, Y252, Y352, and Y452.and the surrounding openings. See drawings A10.00, A1.0YN, A1.1YN, A1.2YN, A1.3YN, & A1.4YN, and Details A6.21, A6.22, & A6.23. Specification Sections 05500. Also included in this option is the railing at the fourth floor opening around the climbing wall Z307 along Grid lines 15 and D. See A1.3ZE and A1.4ZE. Also included in this option is the railing at fifth floor Lounge Y558 along grid line R.

See A1.5YN.

3.1.12 Option No. OP101: SOUND SYSTEMS

Associated conduit, wiring, wall jacks and ceiling speakers are to be provided in base bid. See drawings PG0.0 through PG1.5 for base bid information. Provide equipment racks, all equipment in the racks and connections to produce a fully functioning system as an alternate. See PG series Drawings PG0.0 through PG2.0, and PG2.20 through PG2.242 and Specification Section 16800.

3.1.13 Option No. OP101.1: AUDIO/VISUAL EQUIPMENT

Associated speakers, conduit, cable/wire and wall jacks are provided as base bid is TC series drawings and Specification 16710. Video systems are shown on drawings PG0.0 through PG1.5. Provide remote control systems, Video Equipment/VCR's rack mounted equipment and any related equipment and all connections to provide a fully functioning system as an alternate. See PG drawings PG3.1 and PG 3.2 and Specification Section 16800 for alternate information.

3.1.14 Option No. OP102: NOT USED

3.1.15 Option No. OP103: CENTRAL PAGING SYSTEM

Associated speakers, conduit, cable/wire and wall jacks are provided as base bid. Provide microphones, paging consoles, equipment racks, all equipment in the racks and all connections to provide a fully functioning system as an alternate. See PG0.0 and PG2.13 series Drawings and Specification Section 16800.

3.1.16 Option No. OP104: TELECOMMUNICATIONS EQUIPMENT AND TELEPHONE

Associated wall jacks and conduit/cable/wire are provided as base bid. Provide equipment in data closets, handsets and all connections to provide a fully functioning system as an alternate. See TC series Drawings and Specification Section 16710.

3.1.17 Option No. OP105: SCOREBOARDS & SWIMMING POOL TIMING SYSTEM

Associated conduit, electrical power, and related items as shown on electrical drawings and blocking for mounting are provided in the base bid. Scoreboards, shot clocks, pool timing system , mounting brackets, controllers, floor inserts, jacks, all wiring and connections to provide a fully functioning system are an alternate. See Electrical Drawings, Architectural Interior elevations. All items in Specification Section 11482 are included in this alternate.

3.1.18 Option No. OP106: ATHLETIC EQUIPMENT

Certain athletic equipment as specified in Section 11480 is to be provided as an alternate. Included are Wall Padding Systems, Volleyball Standards and Nets, Wrestling Mats, Chinning Bars, Boxing Equipment, and Ballet Barre

and Brackets. All related sections of this specification section apply and must be provided as well.

3.1.19 Option No. OP107: BLEACHERS

Bleachers are to be provided as an alternate. See Instructional Pool Y040, Gym Y240, and Gym Y440 and Specification Section 12765 for size and quantity.

3.1.20 Option No. OP108: HYDRO THERAPY EQUIPMENT

Hydro Therapy Equipment is an alternate. Provide the 8' x10' unit in Hydro Therapy Room Y147 along with all accessories and support equipment to be located Pool Mech Y170. See Specification Section 13158.

3.1.21 Option No. OP109: POOL EQUIPMENT

Pool equipment is to be provided as an alternate. See SP series Drawings and Specification Section 13154. Provision of all items and the installation is part of this option. Provision of the associated anchors, sleeves and other fixed attachments specified in this section remain in the base bid.

3.1.22 Option No. OP110: FIXED SEATING

Fixed seating in the Media Room Z341 is to be provided as an alternate. See Drawing A1.3ZE and Specification Section 12600.

3.1.23 Option No. OP111: RECEPTION DESK

North Lobby Reception desk is to be provided as a fully functioning alternate. See Drawings A9.25 and Specification Section 06400.

3.1.24 Option No. OP112: CARPET

Carpet is an alternate. Provide carpeting where indicated in Finish Schedule Specification Section 09000 and as specified in Section 09680.

3.1.25 Option No. OP113: WALL CLOCKS

Wall Clocks are an alternate. See Architectural Interior Elevations Series A5.00 Drawings, Materials Key 100a, and Specification Section 10000.

-- End of Section --

SECTION 01045

CUTTING AND PATCHING

PART 1 GENERAL

1.1 SUMMARY

This Section specifies administrative and procedural requirements for cutting, fitting, and patching work, including attendant excavation and backfill, required to complete the Work or to:

a. Make its several parts fit together properly.
b. Uncover portions of the Work to provide for installations of ill-timed work.
c. Remove and replace defective work.
d. Remove and replace work not conforming to requirements of Contract Documents.
e. Remove samples of installed work as specified for testing.
f. Provide penetrations for installation of piping, ductwork, electrical conduit, and the like.

Se4e Section 02220 DEMOLITION for requirements for work in historically significant buildings.

1.2 QUALITY ASSURANCE

Where applicable, all work shall also comply with the provisions of Section 01120, ALTERATOION PROJECT PROCEDURES.

Permission to patch any items of work does not imply a waiver of the Contracting Officer's right to require complete removal and replacement in said areas and of said items if, in Contracting Officer's opinion, patching does not satisfactorily restore quality and appearance of work.

1.2.1 Requirements for Structural Work

Do not cut-and-patch structural work in a manner resulting in a reduction of temporary and permanent load-carrying capacity or load/deflection ratio.

1.2.2 Operational and Safety Limitations

Do not cut-and-patch operational elements and safety-related components in a manner resulting in a reduction of capacities to perform in the manner intended or resulting in decreased operational life, increased maintenance, or decreased safety.

1.2.3 Visual Requirements

Do not cut-and-patch work that is exposed on exterior or in occupied spaces

of building, in a manner resulting in reduction of visual qualities or resulting in evidence of cut-and-patch work, both as judged solely by the Contracting Officer. Remove and replace work judged by the Contracting Officer to be visually unsatisfactory.

1.3 SUBMITTALS

1.3.1 Requirements

Submit a written request to Contracting Officer within 5 working days before executing any cutting or alteration which affects:

a. Work or operation of Government.
b. Structural value or integrity of any element of the Project.
c. Integrity or effectiveness of weather-exposed or moisture-resistant elements or systems.
d. Efficiency, operational life, maintenance, or safety of operational elements.
e. Visual qualities of sight-exposed elements.

1.3.2 Request Shall Include:

a. Identification of the Project.
b. Description of affected work.
c. The necessity for cutting, alteration, or excavation.
d. Effect on work of Government or any separate contractor, or on structural or weatherproof integrity of Project.
e. Description of proposed work.
f. Description of why cutting-and-patching cannot (reasonably) be avoided.
g. Scope of cutting, patching, alteration, or excavation.
h. How it will be performed.
i. How structural elements (if any) will be reinforced.
j. Trades who will execute the work.
k. Products proposed to be used.
l. Extent of refinishing to be done.
m. Approximate phasing identifying manpower, equipment, and dates of the work, and anticipated results in terms of variations from the work as originally completed (structural, operational, visual, and other qualities of significance).
n. Alternatives to cutting and patching.
o. Cost proposal, when applicable.
p. Written permission of any separate contractor whose work will be affected.

1.3.3 Request for Substitution

Should conditions of Work or the schedule indicate a change of products from original installation, Contractor shall submit request for substitution.

1.3.4 Uncovering of Work

Submit written notice to Contracting Officer designating date and time the

work will be uncovered.

PART 2 PRODUCTS

2.1 MATERIALS

Except as otherwise indicated or authorized by the Contracting Officer, provide materials for cutting-and-patching which will result in equal-or-better work than the work being cut-and-patched, in terms of performance characteristics and including visual effect where applicable. Comply with the requirements, and use materials identical with the original materials where feasible and where recognized that satisfactory results can be produced thereby. The materials proposed by the Contractor shall be approved by the Contracting Officer.

Comply with specifications and standards for each specific product involved.

PART 3 EXECUTION

3.1 INSPECTION

1. Inspect existing conditions of Project, including elements subject to damage or to movement during cutting and patching.

2. After uncovering work, inspect conditions affecting installation of Products, or performance of work.

3. Report unsatisfactory or questionable conditions to Contracting Officer in writing; do not proceed with work until Contracting Officer has provided further instructions.

3.2 PREPARATION

1. Provide adequate temporary support as necessary to assure structural value or integrity of affected portion of Work.

2. Provide devices and methods to protect other portions of Project from damage.

3. Provide protection from elements for that portion of the Project which may be exposed by cutting and patching work, and maintain excavations free from water.

3.3 PERFORMANCE

Execute cutting and demolition by methods which will prevent damage to other work, and will provide proper surfaces to receive installation of repairs.

a. In general, where mechanical cutting is required, cut work with sawing and grinding tools, not with hammering and chopping tools. Core drill openings through concrete work.

b. Comply with the requirements of applicable sections of Division 2

- SITEWORK where cutting-and-patching requires excavating and backfilling.

c. Where cutting work may expose and/or cut into asbestos, all requirements of Section 02080 ASBESTOS ABATEMENT shall apply as well as (perfotm) complete notification of all proposed work to the Contracting Officer.

Execute excavating and backfilling by methods which will prevent settlement or damage to other work.

Employ original installer or fabricator to perform cutting and patching for:

a. Weather-exposed or moisture-resistant elements.
b. Sight-exposed finished surfaces.

Execute fitting and adjustment of products to provide a finished installation to comply with specified products, functions, tolerances, and finishes.

Restore work which has been cut or removed; install new products to provide completed Work in accordance with requirements of Contract Documents.

Fit work airtight to pipes, sleeves, ducts, conduit, and other penetrations through surfaces.

Patch with seams which are durable and as invisible as possible. Comply with specified tolerances for the work.

Restore exposed finishes of patched areas; and, where necessary extend finish restoration onto retained work adjoining, in a manner which will eliminate evidence of patching.

a. Where patch occurs in a smooth painted surface, extend final paint coat over the entire unbroken surface containing the patch.

Refinish entire surfaces as necessary to provide an even finish to match adjacent finishes:

a. For continuous surfaces, refinish to nearest intersection.

b. For an assembly, refinish entire unit.

-- End of Section --

SECTION 01090

SOURCES FOR REFERENCE PUBLICATIONS

PART 1 GENERAL

1.1 REFERENCES

Various publications are referenced in other sections of the specifications to establish requirements for the work. These references are identified in each section by document number, date and title. The document number used in the citation is the number assigned by the sponsoring organization, e.g. UL 1 (1993; Rev thru Jan 1995) Flexible Metal Conduit. However, when the sponsoring organization has not assigned a number to a document, an identifying number has been assigned for convenience, e.g. UL's unnumbered 1995 edition of their Building Materials Directory is identified as UL-01 (1995) Building Materials Directory. The sponsoring organization number (UL 1) can be distinguished from an assigned identifying number (UL-01) by the lack of a dash mark (-) in the sponsoring organization assigned number.

1.2 WARRANTY

Sources for reference publications listed below are provided as a convenience to the Contractor. The omission of a source for reference publication from the list below shall not relieve the Contractor from his obligations for performance under the reference publication as required by other Sections of this Specification.

1.3 ORDERING INFORMATION

The addresses of the organizations whose publications are referenced in other sections of these specifications are listed below, and if the source of the publications is different from the address of the sponsoring organization, that information is also provided. Documents listed in the specifications with numbers which were not assigned by the sponsoring organization should be ordered from the source by title rather than by number.

ACI INTERNATIONAL (ACI)

P.O. Box 9094
Farmington Hills, MI 48333-9094
Ph: 248-848-3800
Fax: 248-848-3801
Internet: http://www.aci-int.org

AGRICULTURAL MARKETING SERVICE (AMS)

Seed Regulatory and Testing Branch
USDA, AMS, LS Div.
Room 209, Bldg. 306, BARC-East

Beltsville, MD 20705-2325
Ph: 301-504-9430
Fax: 301-504-5454 Internet: http://www.ams.usda.gov/lsg/ls-sd.htm
e-mail: james_p_triplitt@usda.gov

AIR CONDITIONING AND REFRIGERATION INSTITUTE (ARI)

4301 North Fairfax Dr., Suite 425
ATTN: Pubs Dept.
Arlington, VA 22203
Ph: 703-524-8800
Fax: 703-528-3816
E-mail: ari@ari.org
Internet: www.ari.org

AIR CONDITIONING CONTRACTORS OF AMERICA (ACCA)

1712 New Hampshire Avenue, NW
Washington, DC 20009
Ph: 202-483-9370
FAX: 202-234-4721

AIR DIFFUSION COUNCIL (ADC)

104 So. Michigan Ave., No. 1500
Chicago, IL 60603
Ph: 312-201-0101
Fax: 312-201-0214

AIR MOVEMENT AND CONTROL ASSOCIATION (AMCA)

30 W. University Dr.
Arlington Heights, IL 60004-1893
Ph: 708-394-0404
Fax: 708-253-0088

ALUMINUM ASSOCIATION (AA)

Pubs Department
P.O. Box 753
Waldorf, MD 20601
Ph: 301-645-0756
Fax: 301-843-0159
Internet: www.aluminum.org

AMERICAN ARCHITECTURAL MANUFACTURERS ASSOCIATION (AAMA)

1827 Walden Ofc. Sq.
Suite 104
Schaumburg, IL 60173-4268
Ph: 847-303-5664
Fax: 847-303-5774
Internet: www.aamanet.org

AMERICAN ASSOCIATION OF STATE HIGHWAY AND TRANSPORTATION OFFICIALS (AASHTO)

444 N. Capital St., NW, Suite 249
Washington, DC 20001
Ph: 800-231-3475
Fax: 800-525-5562
Internet: www.aashto.org
NOTE: AASHTO documents with numbers beginning with M or T are available only in Standard Specifications for Transportation Materials and Methods of Samplingand Testing, 1998 @$289.00\X

AMERICAN ASSOCIATION OF TEXTILE CHEMISTS AND COLORISTS (AATCC)

P.O. Box 12215
1 Davis Drive
Research Triangle Park, NC 27709-2215
Ph: 919-549-8141
Fax: 919-549-8933

AMERICAN BEARING MANUFACTURERS ASSOCIATION (ABEMA)

1200 19th Street, NW, Suite 300
Washington, DC 20036-4303
Ph: 202-429-5155
Fax: 202-223-4579

AMERICAN BOILER MANUFACTURERS ASSOCIATION (ABMA)

950 N. Glebe Rd., Suite 160
Arlington, VA 22203-1824
Ph: 703-522-7350
Fax: 703-522-2665

AMERICAN CONCRETE PIPE ASSOCIATION (ACPA)

222 West Las Colinas Blvd., Suite 641
Irving, TX 75039-5423
Ph: 972-506-7616
Fax: 972-506-7682
Internet: http://www.concrete-pipe.org
e-mail: info@concrete-pipe.org

AMERICAN CONFERENCE OF GOVERNMENTAL INDUSTRIAL HYGIENISTS (ACGIH)

1330 Kemper Meadow Dr.
Cincinnati, OH 45240-1634
Ph: 513-742-2020
Fax: 513-742-3355
Internet: www.acgih.org
E-mail: pubs@acgih.org

AMERICAN FOREST & PAPER ASSOCIATION (AF&PA)

American Wood Council
ATTN: Publications Dept.
1111 Nineteenth St. NW, Suite 800
Washington, DC 20036
Ph: 800-294-2372
Fax: 202-463-2791
Internet: http://www.afandpa.org
Order From: American Wood Council
P.O. Box 5364
Madison, WI 53705-5364
Ph: 800-890-7732
Fax: 608-231-2152

AMERICAN GAS ASSOCIATION (AGA)

Order from: AGA Distribution Center
P.O. Box 79230
Baltimore, MD 21279-0230
Ph: 301-617-7819
Fax: 301-206-9789

AMERICAN GEAR MANUFACTURERS ASSOCIATION (AGMA)

1500 King St., Suite 201
Alexandria, VA 22314-2730
Ph: 703-684-0211
Fax: 703-684-0242
Order From:
Global Engineering Documents
15 Inverness Lane East
Englewood, CO 80112
Ph: 800-854-7179
Fax: 303-397-2740

AMERICAN HARDBOARD ASSOCIATION (AHA)

1210 W. Northwest Highway
Palatine, IL 60067
Ph: 847-934-8800
Fax: 847-934-8803

AMERICAN INDUSTRIAL HYGIENE ASSOCIATION (AIHA)

2700 Prosperity Ave., Suite 250
Fairfax, VA 22031
Ph: 703-849-8888
Fax: 703-207-3561
Internet: http://www.aiha.org
E-mail: www.aiscweb.com

AMERICAN INSTITUTE OF STEEL CONSTRUCTION (AISC)

One East Wacker Dr., Suite 3100

Chicago, IL 60601-2001
Ph: 312-670-2400
Publications: 800-644-2400
Fax: 312-670-2400
Internet: http://www.aiscweb.com

AMERICAN INSTITUTE OF TIMBER CONSTRUCTION (AITC)

7012 So. Revere Parkway, Suite 140
Englewood, CO 80112
Ph: 303-792-9559
Fax: 303-792-0669

AMERICAN IRON AND STEEL INSTITUTE (AISI)

ATTN: Publication Orders
P.O. Box 4321
Chestertown, MD 21690
Ph: 800-277-3850
Fax: 410-810-0910

AMERICAN NATIONAL STANDARDS INSTITUTE (ANSI)

11 West 42nd St
New York, NY 10036
Ph: 212-642-4900
Fax: 212-398-0023
Internet: www.ansi.org/
Note: Documents beginning with the letter "S" can be ordered from:
Acoustical Society of America
P. O. Box 1020
Sweickley, PA 15143-9998
Ph: 412-741-1979
Fax: 412-741-0609
Internet: www.aip.org

AMERICAN NURSERY AND LANDSCAPE ASSOCIATION (ANLA)

1250 I St., NW, Suite 500
Washington, DC 20005
Ph: 202-789-2900 Ext 3010
FAX: 202-789-1893

AMERICAN PETROLEUM INSTITUTE (API)

1220 L St., NW
Washington, DC 20005
Ph: 202-682-8375
Fax: 202-962-4776
Internet: http://www.api.org

AMERICAN RAILWAY ENGINEERING & MAINTENANCE-OF-WAY ASSOCIATION (AREMA)

8201 Corporate Dr., Suite 1125
Landover, MD 20785
Ph: 301-459-3200
Fax: 301-459-8077

AMERICAN SOCIETY FOR NONDESTRUCTIVE TESTING (ASNT)

1711 Arlingate Lane
P.O. Box 28518
Columbus, OH 43228-0518
Ph: 800-222-2768
Fax: 614-274-6899

AMERICAN SOCIETY FOR TESTING AND MATERIALS (ASTM)

100 Barr Harbor Drive
West Conshohocken, PA 19428-2959
Ph: 610-832-9500
Fax: 610-832-9555
Internet: www.astm.org
NOTE: The annual ASTM Book of Standards (66 Vol) is available for $3500.00. Prices of individual standards vary.

AMERICAN SOCIETY OF CIVIL ENGINEERS (ASCE)

1801 Alexander Bell Drive
Reston, VA 20190-4400
Ph: 800-548-2723
Fax: 703-295-6333
Internet: www.pubs.asce.org
e-mail: marketing@asce.org

AMERICAN SOCIETY OF HEATING, REFRIGERATING AND AIR-CONDITIONING ENGINEERS (ASHRAE)

1791 Tullie Cir., NE
Atlanta, GA 30329-2305
Ph: 800-527-4723 or 404-636-8400
Fax: 404-321-5478
Internet: http://www.ashrae.org

AMERICAN SOCIETY OF SANITARY ENGINEERING FOR PLUMBING AND SANITARY RESEARCH (ASSE)

P.O. Box 40362
Bay Village, OH 44140
Ph: 216-835-3040
Fax: 216-835-3488
E-mail: asse@ix.netcom.com

AMERICAN WATER WORKS ASSOCIATION(AWWA)

6666 West Quincy
Denver, CO 80235

Ph: 800-926-7337
Fax: 303-795-1989
Internet: www.awwa.org

AMERICAN WELDING SOCIETY (AWS)

550 N.W. LeJeune Road
Miami, FL 33126
Ph: 305-443-9353
Fax: 305-443-7559
Internet: http://www.amweld.org

AMERICAN WOOD-PRESERVERS' ASSOCIATION (AWPA)

3246 Fall Creek Highway, Suite 1900
Grandbury, TX 76049-7979
Ph: 817-326-6300
Fax: 817-326-6306
NOTE: AWPA Book of Standards is published yearly @$75.00; individual standards may be ordered separately for $12.00 to $28.00 each.

APA - THE ENGINEERED WOOD ASSOCIATION (APA)

2130 Barrett Park Dr., Suite 102
Kennesaw, GA 30144-3681
Ph: 770-427-9371
Fax: 770-423-1703
Internet: www.apawood.org
Note: Prices are available only by calling APA

ARCHITECTURAL WOODWORK INSTITUTE (AWI)

1952 Isaac Newton Square
Reston, VA 20190
Ph: 703-733-0600
Fax: 703-733-0584
Internet: www.awinet.org

ASBESTOS CEMENT PIPE PRODUCERS ASSOCIATION (ACPPA)

1745 Jefferson Davis Highway, Suite 406
Arlington, VA 22202
Ph: 703-412-1153
Fax: 703-412-1152

ASME INTERNATIONAL (ASME)

Three Park Avenue
New York, NY 10016-5990
Ph: 212-591-7000
Fax: 212-591-7674
Internet: www.asme.org

ASPHALT INSTITUTE (AI)

Research Park Dr.
P.O. Box 14052
Lexington, KY 40512-4052
Ph: 606-288-4960
Fax: 606-288-4999
Internet: www.asphaltinstitute.org
e-mail: asphalti@asphaltinstitute.org

ASSOCIATED AIR BALANCE COUNCIL (AABC)

1518 K St., NW, Suite 503
Washington, DC 20005
Ph: 202-737-0202
Fax: 202-638-4833

ASSOCIATION FOR THE ADVANCEMENT OF MEDICAL INSTRUMENTATION (AAMI)

3330 Washington Blvd., Suite 400
Arlington, VA 22201-4598
Ph: 703-525-4890
Fax: 703-276-0793
Internet: www.aami.org

ASSOCIATION OF EDISON ILLUMINATING COMPANIES (AEIC)

600 No. 18th St.
P.O. Box 2641
Birmingham, AL 35291-0992
Ph: 205-257-2530
Fax: 205-257-2540
Internet: http://www.aeic.org/index.htm
E-Mail: veazey-white@apc.com

ASSOCIATION OF HOME APPLIANCE MANUFACTURERS (AHAM)

20 No. Wacker Dr., Suite 1500
Chicago, IL 60606
Ph: 312-984-5800
Fax: 312-984-5823
Internet: http://www.aham.org

ASSOCIATION OF IRON AND STEEL ENGINEERS (AISE)

Three Gateway Center, Suite 2350
Pittsburg, PA 15222
Ph: 412-281-6323

BIFMA INTERNATIONAL (BIFMA)

2680 Horizon Drive SE, Suite A-1
Grand Rapids, MI 49546-7500
Ph: 616-285-3963

Fax: 616-285-3765
Internet: www.bifma.com
E-mail: email@bifma.com

BRICK INSTITUTE OF AMERICA (BIA)

11490 Commerce Park Dr., Suite 308
Reston, VA 22091
Ph: 703-620-0010
Fax: 703-620-3928

BUILDERS HARDWARE MANUFACTURERS ASSOCIATION (BHMA)

355 Lexington Ave. New York, NY 10017-6603
Ph: 212-661-4261
Fax: 212-370-9047
Internet: www.buildershardware.com

BUILDING OFFICIALS & CODE ADMINISTRATORS INTERNATIONAL (BOCA)

4051 W. Flossmoor Rd.
Country Club Hills, IL 60478-5795
Ph: 708-799-2300
Fax: 708-799-4981
E-mail: boca@aecnet.com

BUREAU OF RECLAMATION (BOR)

Dept. of the Interior
P.O. Box 25007
Denver, CO 80225
Ph: 303-236-0305, ext. 457
Order from:
National Technical Information
Services (NTIS)
5285 Port Royal Rd.
Springfield, VA 22161
Ph: 800-553-6847
Fax: 703-321-8547
Internet: http://www.fedworld.gov/ntis/ntishome.html

CALIFORNIA DEPARTMENT OF TRANSPORTATION (CDT)

Publication Distribution Unit
1900 Royal Oaks Dr.
Sacramento, CA 95815
Ph: 916-445-3520 or 916-227-7000 (CA Transportation Lab)
Fax: 916-324-8997

CALIFORNIA REDWOOD ASSOCIATION (CRA)

405 Enfrente Ave., Suite 200
Novato, CA 94949
Ph: 415-382-0662

Fax: 415-382-8531

CANADIAN ELECTRICITY ASSOCIATION (CEA)

1 Westmount Square, Suite 1600
Montreal, Quebec, Canada H3Z 209
Ph: 514-937-6181
Fax: 514-937-6498
Internet: www.canelect.ca
e-mail: info@canelect.ca

CARPET AND RUG INSTITUTE (CRI)

310 Holiday Ave.
P.O. Box 2048
Dalton, GA 30722-2048
Ph: 706-278-0232
Fax: 706-278-8835
Internet: carpet-rug.com

CAST IRON SOIL PIPE INSTITUTE (CISPI)

5959 Shallowford Rd., Suite 419
Chattanooga, TN 37421
Ph: 423-892-0137
Fax: 423-892-0817

CEILINGS & INTERIOR SYSTEMS CONSTRUCTION ASSOCIATION (CISCA)

1500 Lincoln Highway, Suite 202
St. Charles, IL 60174
Ph: 708-584-1919
Fax: 708-584-2003

CHLORINE INSTITUTE (CI)

2001 L St., NW
Washington, DC 20036
Ph: 202-775-2790
Fax: 202-223-7225

CODE OF FEDERAL REGULATIONS (CFR)

Order from:
Government Printing Office
Washington, DC 20402
Ph: 202-512-1800
Fax: 202-275-7703
Internet: http://www.pls.com:8001/his/cfr.html

COMMERCIAL ITEM DESCRIPTIONS (CID)

Order from:
General Services Administration

Federal Supply Service Bureau
470 E L'Enfant Plaza, S.W.
Washington, DC 20407
Ph: 202-619-8925
Internet: http://pub.fss.gsa.gov/h1-pub.html

COMPRESSED GAS ASSOCIATION (CGA)

1725 Jefferson Davis Highway, Suite 1004
Arlington, VA 22202-4102
Ph: 703-412-0900
Fax: 703-412-0128
Internet: www.cganet.com
e-mail: Customer_Service@cganet.com

CONCRETE REINFORCING STEEL INSTITUTE (CRSI)

933 No. Plum Grove Rd.
Schaumburg, IL 60173-4758
Ph: 847-517-1200
Fax: 847-517-1206
Internet: http://www.crsi.org

CONSUMER PRODUCT SAFETY COMMISSION (CPSC)

Washington, DC 20207
Ph: 301-504-0580

CONVEYOR EQUIPMENT MANUFACTURERS ASSOCIATION (CEMA)

9384-D Forestwood Lane
Manassas, VA 22110
Ph: 703-330-7079
Fax: 703-330-7984

COOLING TOWER INSTITUTE (CTI)

P.O. Box 73383
Houston, TX 77273
Ph: 281-583-4087
Fax: 281-537-1721

COPPER DEVELOPMENT ASSOCIATION (CDA)

260 Madison Ave.
New York, NY 10016
Ph: 212-251-7200
Fax: 212-251-7234
E-mail: http://www.copper.org

CORPS OF ENGINEERS (COE)

Order from:
U.S. Army Engineer Waterways Experiment Station

ATTN: Technical Report Distribution Section, Services Branch, TIC
3909 Halls Ferry Rd.
Vicksburg, MS 39180-6199
Ph: 601-634-2571
Fax: 601-634-2506
NOTE: COE Handbook for Concrete and Cement (Documents w/prefix CRD-C) (1949-present; 2 Vol) free to Government offices; $10.00 plus $8.00 per yr for 4 qtrly supplements to others). Individual documents, single copies free. Order from address above.

COUNCIL OF AMERICAN BUILDING OFFICIALS (CABO)

5203 Leesburg Pike, Suite 708
Falls Church, VA 22041
Ph: 703-931-4533
Fax: 703-379-1546

DEPARTMENT OF AGRICULTURE (USDA)

14TH STREET & INDEPENDENCE AVE. S.W.
WASHINGTON, D.C. 20250
Ph: (202) 720-2791
Publications: 301-344-2340

DEPARTMENT OF COMMERCE (DOC)

Order From:
National Technical Information Service
5285 Port Royal Road
Springfield, VA 22161
Ph: 703-487-4600
Fax: 703-321-8547
Internet: http://www.ntis.gov

DEPARTMENT OF DEFENSE (DOD)

Order from:
National Technical Information Service
5285 Port Royal Road
Springfield, VA 22161
Ph: 703-487-4650
FAX: 703-321-8547

DEPARTMENT OF HOUSING AND URBAN DEVELOPMENT (HUD)

Order from:
HUD User
P.O. Box 6091
Rockville, MD 20850
Ph: 800-245-2691
e-mail: Huduser@aspensys.com

DEPARTMENT OF STATE (SD)

ATTN: DS/PSP/SEP
SA-6, Room 804
Washington, DC 20522-0602
Ph: 703-875-6537

DOOR AND ACCESS SYSTEM MANUFACTURERS ASSOCIATION (DASMA)

1300 Sumner Avenue
Cleveland, OH 44115-2851
Ph: 216-241-7333
Fax: 216-241-0105
Internet: www.taol.com/dasma
e-mail: dasma@taol.com

DOOR AND HARDWARE INSTITUTE (DHI)

14170 Newbrook Dr.
Chantilly, VA 20151-2232
Ph: 703-222-2010
Fax: 703-222-2410
Internet: www.dhi.org
E-mail: techdept@dhi.org

DUCTILE IRON PIPE RESEARCH ASSOCIATION (DIPRA)

245 Riverchase Parkway East, Suite 0
Birmingham, AL 35244-1856
Ph: 205-988-9870
Fax: 205-988-9822
Internet: www.dipra.org
E-mail: info@dipra.org

EIFS INDUSTRY MEMBERS ASSOCIATION (EIMA)

402 No. 4th St., Suite 102
Yakima, WA 98901-2470
Ph. 509-457-3500
Fax: 509-457-0169

ELECTRONIC INDUSTRIES ASSOCIATION (EIA)

2500 Wilson Blvd.
Arlington, VA 22201-3834
Ph: 703-907-7500
Fax: 703-907-7501
Internet: www.eia.org
Order Publications from:
Global Engineering Documents
15 Inverness Lane East
Englewood, CO 80112
Ph: 800-854-7179
Fax: 303-397-2740
Internet: http://global.ihs.com

ENGINEERING MANUALS (EM)

USACE Publications Depot
Attn: CEIM-SP-D
2803 52nd Avenue
Hyattsville, MD 20781-1102
Ph: 301-394-0081

ENGINEERING PAMPHLETS (EP)

USACE Publications Depot
Attn: CEIM-SP-D
2803 52nd Avenue
Hyattsville, MD 20781-1102
Ph: 301-394-0081

ENGINEERING REGULATIONS (ER)

USACE Publications Depot
Attn: CEIM-SP-D 2803 52nd Avenue
Hyattsville, MD 20781-1102
Ph: 301-394-0081

ENVIRONMENTAL PROTECTION AGENCY (EPA)

Public Information Center
401 M St., SW
Washington, DC 20460
Ph: 800-490-9198
FAX: 202-260-6257
Internet: http://www.epa.gov
NOTE: Some documents are available only from: National Technical Information Services (NTIS)
5285 Port Royal Rd.
Springfield, VA 22161
Ph: 800-553-6847
Fax: 703-321-8547
Internet: http://www.fedworld.gov/ntis/ntishome.html

EXPANSION JOINT MANUFACTURERS ASSOCIATION (EJMA)

25 No. Broadway
Tarrytown, NY 10591
Ph: 914-332-0040

FACTORY MUTUAL ENGINEERING AND RESEARCH (FM)

1151 Boston-Providence Turnpike
P.O. Box 9102
Norwood, MA 02062-9102
Ph: 617-255-4681
Fax: 617-255-4359
Internet: http://www.factorymutual.com

FEDERAL AVIATION ADMINISTRATION (FAA)

Order from:
Superintendant of Documents
U. S. Government Printing Office
Washington, DC 20402
Ph: 202-512-1800
Fax: 202-512-1356
For free documents, order from:
Federal Aviation Administration
Dept. of Transportation
ATTN: General Services Section M-45
400 Seventh St., SW
Washington, DC 20590-0001
Ph: 202-619-8925
Fax: 202-619-8978
Internet: www.faa.gov

FEDERAL HIGHWAY ADMINISTRATION (FHWA)

Office of Highway Safety (HHS-31)
400 Seventh St., SW
Washington, DC 20590-0001
Ph: 202-366-0411
Fax: 202-366-2249
Order from:
Government Printing Office
Superintendent of Documents
Washington, DC 20402
Ph: 202-783-3238

FEDERAL SPECIFICATIONS (FS)

Order from:
General Services Administration
Federal Supply Service Bureau
470 L'Enfant Plaza, S.W.
Washington, DC 20407
Ph: 202-619-8925
Fax: 202-619-8978
Internet: http://pub.fss.gsa.gov/

FEDERAL STANDARDS (FED-STD)

Order from:
General Services Administration
Federal Supply Service Bureau
470 E L'Enfant Plaza, S.W.
Washington, DC 20407
Ph: 202-619-8925
Fax: 202-619-8978
Internet: http://pub.fss.gsa.gov/

FORESTRY SUPPLIERS (FSUP)

205 West Rankin St.
Jackson, MS 39201
Ph: 800-647-5368
Fax: 800-543-4203
Internet: www.forestry-suppliers.com

FOUNDATION FOR CROSS-CONNECTION CONTROL AND HYDRAULIC RESEARCH (FCCCHR)

USC
KAP-200 University Park MC-2531
Los Angeles, CA 90089-2531
Ph: 213-740-2032
Fax: 213-740-8399

GEOLOGICAL SOCIETY OF AMERICA (GSA)

P.O. Box 9140
Boulder, CO 80301
Ph: 800-472-1988
Fax: 303-447-1133

GEOSYNTHETIC INSTITUTE (GSI)

475 Kedron Ave.
Folsom, PA 19033-1208
Ph: 610-522-8440
Fax: 610-522-8441

GERMANY INSTITUTE FOR STANDARDIZATION (DIN)

Order from:
Global Engineering Documents
15 Inverness Lane East
Englewood, CO 80112
Ph: 800-854-7179
Fax: 303-397-7238

GLASS ASSOCIATION OF NORTH AMERICA (GANA)

3310 S.W. Harrison St.
Topeka, KS 66611-2279
Ph: 913-266-7013
Fax: 913-266-0272
Internet:www.cssinfo.com/info/gana.html

GRETAG MACBETH (GM)

Munsell Department
ATTN: Customer Service
617 Little Britain Road

New Windsor, NY 12553-6184
Ph: 800-662-2384 or 914-566-7660, Ext 347
Fax: 914-561-0267
Internet: http://www.munsell.com/munsell5.htm

GYPSUM ASSOCIATION (GA)

810 First St. NE, Suite 510
Washington, DC 20002
Ph: 202-289-5440
Fax: 202-289-3707

HARDWOOD PLYWOOD & VENEER ASSOCIATION (HPVA)

1825 Michael Faraday Dr.
P.O. Box 2789
Reston, VA 22090-2789
Ph: 202-435-2900
Fax: 703-435-2537

HEAT EXCHANGE INSTITUTE (HEI)

1300 Sumner Ave
Cleveland, OH 44115-2851
Ph: 216-241-7333
Fax: 216-241-0105

H.P. WHITE LABORATORY (HPW)

3114 Scarboro Rd.
Street, MD 21154
Ph: 410-838-6550

HYDRAULIC INSTITUTE (HI)

9 Sylvan Way, Suite 180
Parsippany, NJ 07054-3802
Ph: 888-786-7744 or 973-267-9700
Fax: 973-267-9053

HYDRONICS INSTITUTE DIVISION OF GAMA (HYI)

35 Russo Pl.
P.O. Box 218
Berkeley Heights, NJ 07922-0218
Ph: 908-464-8200
Fax: 908-464-7818
Internet: www.gamanet.org

IBM CORPORATION (IBM)

Publications
P.O. Box 29570
Raleigh, NC 27626-0570

Ph: 800-879-2755, Option 1
Fax: 800-445-9269
Internet: www.ibmink.ibm.com

ILLUMINATING ENGINEERING SOCIETY OF NORTH AMERICA (IESNA)

120 Wall St., 17th Floor
New York, NY 10005-4001
Ph: 212-248-5000
Fax: 212-248-5017
Internet: www.iesna.org

INDUSTRIAL FASTENERS INSTITUTE (IFI)

1717 East 9th St., Suite 1105
Cleveland, OH 44114-2879
Ph: 216-241-1482
Fax: 216-241-5901
Internet: http://www.industrial-fasteners.org
e-mail: indfast@aol.com

INSECT SCREENING WEAVERS ASSOCIATION (ISWA)

P.O. Box 1018
Ossining, NY 10562
Ph: 914-962-9052
Fax: 914-923-3031

INSTITUTE FOR INTERCONNECTING AND PACKAGING ELECTRONIC CIRCUITS (IPC)

2215 Sanders Rd.
Northbrook, IL 60062-6135
Ph: 847-509-9700
Fax: 847-509-9798
Internet: www.ipc.org
e-mail: orderipc@ipc.org

INSTITUTE OF CLEAN AIR COMPANIES (ICAC)

1660 L St., NW, Suite 1100
Washington, DC 20036-5603
Ph: 202-457-0911
Fax: 202-331-1388
E-mail: sjenkins@icac.com
Internet: icac.com

INSTITUTE OF ELECTRICAL AND ELECTRONICS ENGINEERS (IEEE)

445 Hoes Ln, P. O. Box 1331
Piscataway, NJ 08855-1331
Ph: 732-981-0060 OR 800-701-4333
Fax: 732-981-9667
Internet: http//standards.ieee.org

E-mail: customer.service@ieee.org
Note: Documents may also be ordered from:
Global Engineering Documents
15 Inverness Way East
Englewood, CO 80112
Ph: 800-854-7179
Fax:303-397-2740
Internet: global.ihs.com

INSTITUTE OF ENVIRONMENTAL SCIENCES (IES)

940 East Northwest Highway
Mount Prospect, IL 60056
Ph: 847-255-1561
Fax: 847-255-1699

INSULATED CABLE ENGINEERS ASSOCIATION (ICEA)

P.O. Box 440
South Yarmouth, MA 02664
Ph: 508-394-4424
Fax: 508-394-1194
E-mail: www.electricnet.com/orgs/insucbl.htm

INTERNATIONAL APPROVAL SERVICES (IAS)

8501 East Pleasant Valley Rd.
Cleveland, OH 44131
Ph: 216-524-4990
Fax: 216-642-3463
Internet: www.iasapprovals.org

INTERNATIONAL ASSOCIATION OF PLUMBING AND MECHANICAL OFFICIALS (IAPMO)

20001 Walnut Dr., So.
Walnut, CA 91789-2825
Ph: 909-595-8449
Fax: 909-594-3690
Fax for Stds: 909-594-5265
Internet: www.iapmo.org

INTERNATIONAL CONFERENCE OF BUILDING OFFICIALS (ICBO)

5360 Workman Mill Rd.
Whittier, CA 90601-2298
Ph: 310-699-0541
Fax: 310-692-3853

INTERNATIONAL ELECTROTECHNICAL COMMISSION (IEC)

3, rue de Varembe, Case Postale 131
CH-1211 Geneva 20, Switzerland
Ph: 41-22-919-0211

Fax: 41-22-919-0300
Internet: http://www.iec.ch
e-mail: custserv@iec.ch

INTERNATIONAL INSTITUTE OF AMMONIA REFRIGERATION (IIAR)

1200 Nineteenth St., NW, Suite 300
Washington, DC 20036-2912
Ph: 202-857-1110
Fax: 202-223-4579

INTERNATIONAL MUNICIPAL SIGNAL ASSOCIATION (IMSA)

165 East Union St. P.O. Box 539
Newark, NY 14513
Ph: 315-331-2182
Fax: 315-331-8505

INTERNATIONAL ORGANIZATION FOR STANDARDIZATION (ISO)

Internet: www.iso.ch
Order Publications from:
Global Engineering Documents
15 Inverness Lane East
Englewood, CO 80112
Ph: 800-854-7179
Fax: 303-397-7238
Internet: http://global.ihs.com

INTERNATIONAL SLURRY SURFACING ASSOCIATION (ISSA)

1200 Nineteenth St., NW, Suite 300
Washington, DC 20036-2401
Ph: 202-857-1160
Fax: 202-223-4579
Internet: http://www.rochester.edu/issa/

INTERNATIONAL TELECOMMUNICATION UNION (ITU)

Order from:
U.S. Dept of Commerce
National Technical Information Service
585 Port Royal Road.
Springfield, VA 22161
Ph: 703-487-4660
FAX: 703-321-8547
For documents not avail from Dept of Commerce:
E-Mail: sales@itu.ch
Fax: 41.22.730.5194

IRON & STEEL SOCIETY (ISS)

410 Commonwealth Dr.
Warrendale, PA 15086-7512

Ph: 412-776-1535, ext. 1
Fax: 412-776-0430
E-Mail: custserv @ issource.org
Internet: www.issourse.org

ISA (ISA)

67 Alexander Drive
P.O. Box 12277
Research Triangle Park, NC 27709
Ph: 919-549-8411
Fax: 919-549-8288
e-mail: ISA@isa.org
Internet: http://www.isa.org

KITCHEN CABINET MANUFACTURERS ASSOCIATION (KCMA)

1899 Preston White Dr.
Reston, VA 20191-5435
Ph: 703-264-1690
Fax: 703-620-6530
Internet: www.kcma.org

MANUFACTURERS STANDARDIZATION SOCIETY OF THE VALVE AND FITTINGS INDUSTRY (MSS)

127 Park St., NE
Vienna, VA 22180-4602
Ph: 703-281-6613
Fax: 703-281-6671
Internet: //cssinfo.com/info/mss/html

MAPLE FLOORING MANUFACTURERS ASSOCIATION (MFMA)

60 Revere Dr., Suite 500
Northbrook, IL 60062
Ph: 847-480-9138
Fax: 847-480-9282
e-mail: mfma@maplefloor.com

MARBLE INSTITUTE OF AMERICA (MIA)

33505 State St.
Farmington, MI 48335
Ph: 810-476-5558
Fax: 810-476-1630

MATERIAL HANDLING INDUSTRY (MHI)

8720 Red Oak Blvd., Suite 201
Charlotte, NC 28217-3992
Ph: 800-345-1815 or 704-522-9644
Fax: 704-522-7826

METAL BUILDING MANUFACTURERS ASSOCIATION (MBMA)

1300 Sumner Ave.
Cleveland, OH 44115-2851
Ph: 216-241-7333
Fax: 216-241-0105

MIDWEST INSULATION CONTRACTORS ASSOCIATION (MICA)

2017 So. 139th Cir.
Omaha, NE 68144
Ph: 402-342-3463
Fax: 402-330-9702

MILITARY HANDBOOKS (MIL-HDBK)

Order from:
Standardization Documents Order Desk
Bldg 4D
700 Robbins AV
Philadelphia, PA 19111-5094
Ph: 215-697-2179
Fax: 215-697-2978
Internet: www.dodssp.daps.mil

MILITARY SPECIFICATIONS (MS)

Order from:
Standardization Documents Order Desk
Building 4, Section D
700 Robbins Ave.
Philadelphia, PA 19111-5094
Ph: 215-697-2179
Fax: 215-697-2978
Internet: www.dodssp.daps.mil

MILITARY STANDARDS (MIL-STD)

Order from:
Standardization Documents Order Desk
Building 4, Section D
700 Robbins Ave.
Philadelphia, PA 19111-5094
Ph: 215-697-2179
Fax: 215-697-2978
Internet: www.dodssp.daps.mil

NACE INTERNATIONAL (NACE)

1440 South Creek Drive
Houston, TX 77084-4906
Ph: 281-228-6200
Fax: 281-228-6300
Internet: www.nace.org

NATIONAL ASSOCIATION OF ARCHITECTURAL METAL MANUFACTURERS (NAAMM)

8 So. Michigan Ave, Suite 100
Chicago, IL 60603
Ph: 312-782-4951
Internet: www.naam.org

NATIONAL ASSOCIATION OF PLUMBING-HEATING-COOLING CONTRACTORS (NAPHCC)

180 S. Washington Street
P.O. Box 6808
Falls Church, VA 22046
Ph: 800-533-7694
Fax: 703-237-7442

NATIONAL BOARD OF BOILER AND PRESSURE VESSEL INSPECTORS (NBBPVI)

1055 Crupper Ave.
Columbus, OH 43229-1183
Ph: 614-888-2463
Fax: 614-847-1147
e-mail: orders @ nationalboard.org

NATIONAL CABLE TELEVISION ASSOCIATION (NCTA)

1724 Massachusetts Ave. NW
Washington, DC 20036-1969
Ph: 202-775-3550
Fax: 202-775-3698

NATIONAL COUNCIL ON RADIATION PROTECTION AND MEASUREMENTS (NCRP)

7910 Woodmont Ave., Suite 800
Bethesda, MD 20814-3095
Ph: 800-229-2652
Fax: 301-907-8768

NATIONAL DRILLING ASSOCIATION (NDA)

3008 Millwood Avenue
Columbia, SC 29205
Ph: 800-445-8629
Fax: 803-765-0860

NATIONAL ELECTRICAL MANUFACTURERS ASSOCIATION (NEMA)

1300 N. 17th St., Suite 1847
Rosslyn, VA 22209
Ph: 703-841-3200
Fax: 202-457-8473
Internet: http//www.nema.org/

Order Publications from:
Global Engineering Documents
15 Inverness Way East
Englewood, CO 80112-5776
Ph: 800-264-3974
Fax: 303-397-7935
Internet: http://global.ihs.com

NATIONAL ENVIRONMENTAL BALANCING BUREAU (NEBB)

8575 Grovemont Circle
Gaithersburg, MD 20877-4121
Ph: 301-977-3698
Fax: 301-977-9589

NATIONAL FIRE PROTECTION ASSOCIATION (NFPA)

One Batterymarch Park P.O. Box 9101
Quincy, MA 02269-9101
Ph: 800-344-3555
Fax: 800-593-6372
Internet: http://www.nfpa.org
NOTE: The complete set of 1997 NFPA National Fire Codes (13 Vol.) is available for $835.00.

NATIONAL FLUID POWER ASSOCIATION (NFLPA)

3333 No. Mayfair Rd.
Milwaukee, WI 53222-3219
Ph: 414-778-3363
Fax: 414-778-3361
Internet: www.nfpa.com
E-mail: nfpa@nfpa.com

NATIONAL HARDWOOD LUMBER ASSOCIATION (NHLA)

P.O. Box 34518
Memphis, TN 38184-0518
Ph: 901-377-1818
Fax: 901-382-6419
e-mail: nhla@natlhardwood.org

NATIONAL INSTITUTE FOR CERTIFICATION IN ENGINEERING TECHNOLOGIES (NICET)

1420 King Street
Alexandria, VA 22314-2794
Ph: 888-476-4238
Internet: www.nicet.org

NATIONAL INSTITUTE FOR OCCUPATIONAL SAFETY AND HEALTH (NIOSH)

Mail Stop C-13
4676 Columbia Parkway

Cincinnati, OH 45226-1998
Ph: 800-356-4676
Internet: http://www.cdc.gov/niosh/homepage.html
To order pubs for which a fee is charged, order from:
Superintendent of Documents
Government Printing Office
Washington, DC 20402-9325
Ph: 202-512-1800
Fax: 202-512-2250

NATIONAL INSTITUTE OF JUSTICE (NIJ)

National Law Enforcement and Corrections Technology Center
2277 Research Blvd. - Mailstop 1E
Rockville, MD 20850
Ph: 800-248-2742 or 301-519-5060
Fax: 301-519-5179
Internet: http://www.nlectc.org
e-mail: nlectc@aspensys.com

NATIONAL INSTITUTE OF STANDARDS AND TECHNOLOGY (NIST)

Department of Commerce
Gaithersburg, MD 20899-0001
Ph: 301-975-4025
Fax: 301-926-1630
Order Publications From:
Superintendent of Documents
U.S. Government Printing Office (GPO)
Washington, DC 20402
Ph: 202-512-1800
Fax: 202-512-2250
or
National Technical Information Services (NTIS)
5285 Port Royal Rd.
Springfield, VA 22161
Ph: 800-553-6847
Fax: 703-321-8547
Internet: http://ww.gov/ntis.gov

NATIONAL LIME ASSOCIATION (NLA)

200 No. Glebe Rd., Suite 800
Arlington, VA 22203-3728
Ph: 703-243-5463
Fax: 703-243-5489

NATIONAL OAK FLOORING MANUFACTURERS ASSOCIATION (NOFMA)

P.O. Box 3009
Memphis, TN 38173-0009
Ph: 901-526-5016
Fax: 901-526-7022

NATIONAL READY-MIXED CONCRETE ASSOCIATION (NRMCA)

900 Spring St.
Silver Spring, MD 20910
Ph: 301-587-1400
Fax: 301-585-4219

NATIONAL ROOFING CONTRACTORS ASSOCIATION (NRCA)

P.O. Box 809261
Chicago, IL 60680-9261
Ph: 800-323-9545
Fax: 708-299-1183

NATIONAL TERRAZZO & MOSAIC ASSOCIATION (NTMA)

3166 DesPlaines Ave., Suite 132
DesPlaines, IL 60018
Ph: 708-635-7744
Fax: 708-635-9127

NATIONAL WOOD WINDOW & DOOR ASSOCIATION (NWWDA)

1400 East Touhy Ave., Suite G-54
Des Plaines, IL 60018
Ph: 847-299-5200
Fax: 708-299-1286

NAVAL FACILITIES ENGINEERING COMMAND (NAVFAC)

1510 Gilbert St.
Norfolk, VA 23511-2699
Ph: 757-322-4200
Fax: 757-322-4416

NAVAL FACILITIES ENGINEERING SERVICE CENTER (NFESC)

560 Center Drive
Port Hueneme, CA 93043-4328
Ph: 805-982-9110

NORTH AMERICAN INSULATION MANUFACTURERS ASSOCIATION (NAIMA)

44 Canal Center Plaza, Suite 310
Alexandria, VA 22314
Ph: 703-684-0084

NORTHEASTERN LUMBER MANUFACTURERS ASSOCIATION (NELMA)

P.O. Box 87A
Cumberland Center, ME 04021
Ph: 207-829-6901
Fax: 207-829-4293

NORTHEAST REGIONAL AGRICULTURAL ENGINEERING SERVICE (NRAES)

Cooperative Extension
152 Riley-Robb Hall
Ithaca, NY 14853-5701
Ph: 607-255-7654
Fax: 607-254-8770
Internet: http://rcwpsun.cas.psu.edu/nraes
E-mail: nraes@cornell.edu

NSF INTERNATIONAL (NSF)

ATTN: Publications
P.O. Box 130140
Ann Arbor, MI 48113-0140
Ph: 313-913-5744
Fax: 313-769-0109
Internet: www.nsf.org

OCCUPATIONAL SAFETY AND HEALTH ADMINISTRATION (OSHA)

ATTN: Office of Public Affairs-Room N3647
200 Constitution Avenue
Washington, D.C. 20210
Ph: 202-693-1999
Internet: www.osha.gov

PIPE FABRICATION INSTITUTE (PFI)

P.O. Box 173
Springdale, PA 15144
Ph: 412-274-4722
Fax: 412-274-4722

PLASTIC PIPE AND FITTINGS ASSOCIATION (PPFA)

800 Roosevelt Rd., Bldg C, Suite 20
Glen Ellyn, IL 60137
Ph: 630-858-6540
Fax: 630-790-3095

PLASTICS PIPE INSTITUTE (PPI)

1801 L St. NW, Suite 600K
Washington, D. C. 20006-1301
Ph: 888-314-6774
Fax: 202-293-0048
Internet: http://www.plasticpipe.org
Order Publications from:
SPI
P. O. Box 753
Waldorf, MD 20604
Ph: 202-974-5332
Fax: 800-541-0736 or 202-296-7359

PLUMBING AND DRAINAGE INSTITUTE (PDI)

45 Bristol Dr., Suite 101.
South Easton, MA 02375
Ph: 508-230-3516
Fax: 508-230-3529
E-Mail: pdhw@tiac.net

PLUMBING AND PIPING INDUSTRY COUNCIL (PPIC)

501 Shatto Place, Suite 402
Los Angeles, CA 90020
Ph: 213-487-3790
Fax: 213-487-3880

PORCELAIN ENAMEL INSTITUTE (PEI)

4004 Hillsboro Pike, Suite 224B
Nashville, TN 37215
Ph: 615-385-5357
Fax: 615-385-5463
Internet: www.porcelainenamel.com

PRECAST/PRESTRESSED CONCRETE INSTITUTE (PCI)

175 West Jackson Blvd., Suite 1859
Chicago, IL 60604-9773
Ph: 312-786-0300
Fax: 312-786-0353
Internet: www.pci.org
e-mail: info@pci.org

RUBBER MANUFACTURERS ASSOCIATION (RMA)

1400 K St., NW
Washington, DC 20005
Ph: 202-682-4866
Fax: 202-682-4810
Order Publications from:
The Mail Room
P. O. Box 3147
Medina, OH 44258
Ph: 800-325-5098 or 330-723-2987
Fax: 330-725-0576

RURAL UTILITIES SERVICE (RUS)

ATTN: Publications
14th and Independence Ave., SW, Room 4028-S
Washington, DC 20250
Ph: 202-720-8674 OR 202-720-8679
Fax: 202-205-3654
Internet: www.usda.gov/rus/home/home.htm

SCREEN MANUFACTURERS ASSOCIATION (SMA)

2850 South Ocean Boulevard, Suite 114
Palm Beach, FL 33480-5535
Ph: 561-533-0991
Fax: 561-533-7466
e-mail: fscottfitzgerald@compuserve.com

SHEET METAL & AIR CONDITIONING CONTRACTORS' NATIONAL ASSOCIATION (SMACNA)

P.O. Box 221230
Chantilly, VA 20153-1230
Ph: 703-803-2980
Fax: 703-803-3732
Internet: http://www.smacna.org

SINGLE PLY ROOFING INSTITUTE (SPRI)

200 Reservoir St., Suite 309A
Needham, MA 02494
Ph: 781-444-0242
Fax: 781-444-6111
Internet: www.spri.org

SOCIETY OF AUTOMOTIVE ENGINEERS (SAE)

400 Commonwealth Dr.
Warrendale, PA 15096-0001
Ph: 724-776-4970
Fax: 724-776-0790
Internet: http://www.sae.org
e-mail: publications@sae.org

SOUTHERN BUILDING CODE CONGRESS INTERNATIONAL (SBCCI)

900 Montclair Road
Birmingham, AL 35213-1206
Ph: 205-591-1853
Fax: 205-591-0775

SOUTHERN CYPRESS MANUFACTURERS ASSOCIATION (SCMA)

400 Penn Center Boulevard, Suite 530
Pittsburgh, PA 15235
Ph: 412-829-0770
Fax: 412-829-0844

SOUTHERN PINE INSPECTION BUREAU (SPIB)

4709 Scenic Highway
Pensacola, FL 32504-9094
Ph: 850-434-2611

Fax: 850-433-5594
e-mail: spib@spib.org

SSPC: THE SOCIETY FOR PROTECTIVE COATINGS (SSPC)

40 24th Street, 6th Floor
Pittsburgh, PA 15222-4656
Ph: 412-281-2331
Fax: 412-281-9992
Internet: www.sspc.org
NOTE: SSPC documents, except as noted otherwise, are available only as a part of the 1995 Steel Structures Painting Manual, 7th Edition @ $115.00. \F

STEEL DECK INSTITUTE (SDI)

P.O. Box 25
Fox River Grove, IL 60021
Ph: 847-462-1930
Fax: 847-462-1940
Internet: http://www.sdi.org
e-mail: janet@sdi.org

STEEL DOOR INSTITUTE (SDOI)

30200 Detroit Rd.
Cleveland, OH 44145-1967
Ph: 216-899-0010
Fax: 216-892-1404

STEEL JOIST INSTITUTE (SJI)

3127 Tenth Ave., North Ext.
Myrtle Beach, SC 29577-6760
Ph: 803-626-1995
Fax: 803-626-5565

STEEL TANK INSTITUTE (STI)

570 Oakwood Rd.
Lake Zurich, IL 60047
Ph: 847-438-8265
Fax: 847-438-4500
Internet: www.steeltank.com
e-mail: technic@interaccess.com

STEEL WINDOW INSTITUTE (SWI)

1300 Sumner Ave.
Cleveland, OH 44115-2851
Ph: 216-241-7333
Fax: 216-241-0105

TILE COUNCIL OF AMERICA (TCA)

P.O. Box 1787
Clemson, SC 29633-1787
Ph: 864-646-8453
FAX: 864-646-2821

TRUSS PLATE INSTITUTE (TPI)

583 D'Onofrio Dr., Suite 200
Madison, WI 53719
Ph: 608-833-5900
Fax: 608-833-4360

TUBULAR EXCHANGE MANUFACTURERS ASSOCIATION (TEMA)

25 N. Broadway
Tarrytown, NY 10591
Ph: 914-332-0040
Fax: 914-332-1541

UNDERWRITERS LABORATORIES (UL)

333 Pfingsten Rd.
Northbrook, IL 60062-2096
Ph: 800-704-4050
Fax: 847-509-6249
Internet: http://www.ul.com/
Order from:
Global Engineering Documents
15 Inverness Way East
Englewood, CO 80112-5776
Ph: 800-569-7128
Fax: 303-397-7945
Internet: http://global.ihs.com
E-mail: global@ihs.com
Note: First price is for std only. Second price is for Std, incl Revision Subscription Service.

UNI-BELL PVC PIPE ASSOCIATION (UBPPA)

2655 Villa Creek Dr., Suite 155
Dallas, TX 75234
Ph: 214-243-3902
Fax: 214-243-3907

U. S. ARMY ENVIORNMENTAL HYGIENE AGENCY (USAEHA)

Waste Disposal Engineering Division
Aberdeen Proving Ground, MD 21010-5422
Ph: 410-671-3652

WATER ENVIRONMENT FEDERATION (WEF)

601 Wythe St.

Alexandria, VA 22314-1994
Ph: 703-684-2400
Fax: 703-684-2492
Internet: www.wef.org

WATER QUALITY ASSOCIATION (WQA)

4151 Naperville Rd.
Lisle, IL 60532
Ph: 630-505-0160
Fax: 630-505-9637

WEST COAST LUMBER INSPECTION BUREAU (WCLIB)

P.O. Box 23145
Portland, OR 97281
Ph: 503-639-0651
Fax: 503-684-8928

WESTERN WOOD PRESERVERS INSTITUTE (WWPI)

7017 N.E. Highway 99 # 108
Vancover, WA 98666
Ph: 360-693-9958
Fax: 360-693-9967

WESTERN WOOD PRODUCTS ASSOCIATION (WWPA)

Yeon Bldg.
522 SW 5th Ave.
Portland, OR 97204-2122
Ph: 503-224-3930
Fax: 503-224-3934

WOOD MOULDING AND MILLWORK PRODUCERS ASSOCIATION (WMMPA)

507 First Street
Woodland, CA 95695
Ph: 916-661-9591
Fax: 916-661-9586

-- End of Section --

SECTION 01120

ALTERATION PROJECT PROCEDURES

PART 1 GENERAL

1.1 REQUIREMENTS INCLUDED

1.1.1 Requirements

Coordinate Work and schedule elements of alterations and renovation work by procedures and methods that expedite completion of the Work. No alterations and/or renovation work shall proceed without written approval of the Contractor. See also the requirements of Section 01045, CUTTING AND PATCHING.

1.1.2 Removal of Existing Work

In addition to demolition specified in Section 02220, DEMOLITION, and indicated on Drawings, cut, move and remove miscellaneous existing work as necessary to provide access and to allow alterations and new work to proceed. Include but do not limit work to:

a. Repair and removal of hazardous and unsanitary conditions and materials.

b. Removal of abandoned items and items that serve no useful purpose, such as abandoned piping, conduit and wiring. For the items that serve no useful purpose, those items shall be identified in detail in writing. The list and description shall be subject to approval of the Contracting Officer. The Contracting Officer may add to the list of items that serve no useful purpose.

c. Removal of unsuitable and extraneous materials not marked for salvage, such as abandoned furnishings and equipment, and debris such as rotted wood, rusted metals and deteriorated concrete.

d. Cleaning of surfaces, and removal of surface finishes as needed to install new work and finishes.

1.1.3 Patching and Repair

Patching, repair, and refinishing existing work intended for reuse, to specified condition for each material, with clean, neat, smooth transition to adjacent new items of construction.

Where applicable, all work shall comply with provisions of Section 01045, CUTTING AND PATCHING.

1.2 ALTERATIONS, CUTTING AND PROTECTION

1.2.1 Requirements

Ensure that work is performed by qualified workers in accordance with the Contract Documents.

Cutting of existing construction required to install equipment under various Sections shall be done by coring or sawing method under Section appropriate to materials and construction.

Cut and remove minimum materials necessary and avoid damage to adjacent work intended for reuse.

Cut finish surfaces such as masonry, title, plaster and metals by methods that terminate surfaces in a straight line at natural points of division.

Cutting and patching work shall comply with requirements of Section 01045, CUTTING AND PATCHING.

Protect existing finishes, equipment, and adjacent work scheduled to remain from damage from weather and extremes of temperature.

a. Maintain existing interior work above 60 degrees F.

b. Provide weather protection, waterproofing, heat and humidity control as necessary to prevent damage to remaining existing work and to new work.

Provide temporary enclosures to separate work areas from existing building and from areas occupied by Government, and to provide weather protection.

Discovery of construction, furnishings, and articles with historic or private value shall remain in possession of Government.

a. Promptly notify Contracting Officer.

b. Protect discovery from damage from weather conditions and construction operations.

c. Contracting Officer will promptly transmit Government's decision for disposition of discovery.

d. Store items to be retained by Government in safe, dry place on site. Dispose of items which Government releases to Contractor's disposition.

PART 2 PRODUCTS

2.1 SALVAGED MATERIALS FOR REUSE

2.1.1 Requirements

Salvage sufficient quantities of cut and removed materials to replace

damaged work of existing construction when material is not readily obtainable on current markets.

a. Store salvaged items in dry, secure place on site.

b. Items not required for use in repair of existing work shall become the Contractor's property.

c. Do not incorporate salvaged or used materials in new construction without Contracting Officer's approval.

Where cutting work mat expose and/or cut into asbestos, all requirements of Section 02080, ASBESTOS ABATEMENT shall apply as well as complete notification of all proposed work to the Contracting Officer.

2.2 PATCHING, EXTENDING, AND MATCHING

2.2.1 Requirements

Provide same products or types of construction as those in existing structure, as needed to patch, extend, and match existing work.

a. Generally, Contract Documents do not define products or standards of workmanship present in existing construction; determine products and workmanship by inspection and testing. Contracting Officer will judge workmanship and materials against existing as a sample of comparison.

b. Provide products, finishes, and types of construction for patching, extending and matching shall be performed as necessary to make work complete and consistent to identical standards of quality.

c. The Contracting Officer, in his sole judgement, will evaluate the completion of the works and determine if the completed works meet the standards of quality of the existing works. The Contractor shall finish the completed works in accordance with the Contracting Officer's findings.

PART 3 EXECUTION

3.1 PERFORMANCE

3.1.1 Requirements

Patching of existing construction to accommodate work of various Sections shall be performed under Sections that specify methods and materials similar to adjacent existing construction, in the following areas:

a. Penetrations for electrical conduit, plumbing pipes and ductwork where exposed to view in all exterior walls, and in walls that form air plenums.

b. Penetrations through fire walls for electrical conduit, plumbing

pipes and ductwork through fire walls as required by code.

c. Areas adjacent to installation of new doors and windows and other framed wall and partition penetrations.

d. Removal and patching of damaged material where indicated.

Patch areas exposed to view after removal of existing construction such as chalkboard, tackboard, chair rails, base, cove and intersecting walls as indicated.

Patch and extend existing work using skilled workers who are capable of matching existing quality of workmanship. Quality of patched or extended work shall be equal to that specified for new work.

3.1.2 Alteration Requirements

Where alterations may expose and/or cut into asbestos, all requirements of Section 02080, ASBESTOS ABATEMENT shall apply as well as (perform) complete notification of all proposed work to the Contracting Officer.

3.2 ADJUSTMENTS

3.2.1 Requirements

Where partitions are removed, patch floors, walls, and ceilings, with finish materials to match existing.

a. Where removal of partitions results in adjacent spaces becoming one, rework floors and ceilings to provide smooth planes without breaks, steps, or bulkheads. Where extreme change of plane of two inches or more occurs, request instructions from Contracting Officer as to method of making transition.

3.2.2 Trim and refinish existing doors as necessary to clear new floors.

3.3 DAMAGED SURFACES

3.3.1 Requirements

Patch and replace parts of existing finished surface which is found to be damaged, lifted, discolored, or otherwise imperfect, with matching materials.

a. Provide adequate support of substrate until patching finish achieves adequate bond to existing surfaces.

b. Refinish patched portions of painted and coated surfaces to produce uniform color and texture over entire surface.

c. When existing surface finish cannot be matched, refinish entire surface to nearest intersections.

3.4 TRANSITION FROM EXISTING TO NEW WORK

When new work abuts or finishes flush with existing work, make smooth transition. Patched work shall match existing adjacent work in texture and appearance so that patch or transition is not visible from 5 ft. away.

When finished surfaces are cut so that smooth transition with new work is not possible, terminate existing surface in a neat manner along straight line at natural line of division. Provide trim appropriate to finished surface.

3.5 CLEANING

At completion of work of each Section, clean area and prepare surfaces for work of other Sections.

At completion of alterations work in each area, provide final cleaning and return space to condition suitable for use by Government.

-- End of Section --

SECTION 01312

RESIDENT MANAGEMENT SYSTEM (RMS)

1.1 GENERAL

The Government will use the Resident Management System for Windows (RMS-W) to assist in its monitoring and administration of this contract. The Contractor shall use the Government-furnished Construction Contractor Module of RMS-Windows, referred to as RMS-QC (QC for Quality Control), to record, maintain, and submit various information throughout the contract period. This joint Government-Contractor use of RMS-W and RMS-QC will facilitate electronic exchange of information and overall management of the contract. RMS-QC provides the means for the Contractor to input, track, and electronically share information with the Government in the following areas:

Administration
Finances
Quality Control
Submittal Monitoring
Scheduling
Import/Export of Data

1.1.1 Correspondence and Electronic Communications

For ease and speed of communications, both Government and Contractor will, to the maximum extent feasible, exchange correspondence and other documents in electronic format. Correspondence, pay requests and other documents comprising the official contract record shall also be provided in paper format, with signatures and dates where necessary. Paper documents will govern, in the event of discrepancy with the electronic version.

1.1.2 Other Factors

Particular attention is directed to Contract Clause, "Schedules for Construction Contracts", Contract Clause, "Payments", Section 01320, "Project Schedule", Section 01330, SUBMITTAL PROCEDURES, and Section 01451, CONTRACTOR QUALITY CONTROL, which have a direct relationship to the reporting to be accomplished through RMS-QC. Also, there is no separate payment for establishing and maintaining the RMS-QC database; all costs associated therewith shall be included in the contract pricing for the work.

1.2 RMS-QC SOFTWARE

RMS-QC is a Windows-based program that can be run on a stand-alone personal computer or on a network. The Government will make available the RMS-QC software to the Contractor after award of the construction contract. Prior to the Pre-Construction Conference, the Contractor shall be responsible to download, install and use the latest version of the RMS-QC software from

the Government's RMS Internet Website. Upon specific justification and request by the Contractor, the Government can provide RMS-QC on 3-1/2" high-density diskettes or CD-ROM. Any program updates of RMS-QC will be made available to the Contractor via the Government RMS Website as they become available.

1.3 SYSTEM REQUIREMENTS

The following listed hardware and software is the minimum system configuration that the Contractor shall have to run RMS-QC:

Hardware

IBM-compatible PC with 200 MHz Pentium or higher processor

64+ MB RAM

4 GB hard drive disk space for sole use by the RMS-QC system

3 1/2 inch high-density floppy drive

Compact disk (CD) Reader

Color monitor

Laser printer compatible with HP LaserJet III or better, with minimum 4 MB installed memory.

Connection to the Internet, minimum 28 BPS

Software

Microsoft (MS) Access 97 or newer version database software

MS Windows 95 or newer version operating system (MS Windows NT 4.0 or newer is recommended)

Word Processing software- MS Word 97 or newer

Internet browser

The Contractor's computer system shall be protected by virus protection software that is regularly upgraded with all issued manufacturer's updates throughout the life of the contract.

Electronic mail (E-mail) compatible with MS Outloo

1.4 RELATED INFORMATION

1.4.1 RMS-QC User Guide

After contract award, the Contractor shall download instructions for the installation and use of RMS-QC from the Government RMS Internet Website ('http://winrms.usace.army.mil');

1.5 CONTRACT DATABASE

Prior to the pre-construction conference, the Government shall provide the Contractor with basic contract award data to use for RMS-QC. The Government will provide data updates to the Contractor as needed, generally by files attached to E-mail. These updates will generally consist of submittal reviews, correspondence status, QA comments, and other administrative and QA data.

1.6 DATABASE MAINTENANCE

The Contractor shall establish, maintain, and update data for the contract in the RMS-QC database throughout the duration of the contract. The Contractor shall establish and maintain the RMS-QC database at the Contractor's site office. Data updates to the Government shall be submitted by E-mail with file attachments, e.g., daily reports, schedule updates, payment requests. If permitted by the Contracting Officer, a data diskette or CD-ROM may be used instead of E-mail (see Paragraph DATA SUBMISSION VIA COMPUTER DISKETTE OR CD-ROM). The RMS-QC database typically shall include current data on the following items:

1.6.1 Administration

1.6.1.1 Contractor Information

The database shall contain the Contractor's name, address, telephone numbers, management staff, and other required items. Within 14 calendar days of receipt of RMS-QC software from the Government, the Contractor shall deliver Contractor administrative data in electronic format via E-mail.

1.6.1.2 Subcontractor Information

The database shall contain the name, trade, address, phone numbers, and other required information for all subcontractors. A subcontractor must be listed separately for each trade to be performed. Each subcontractor/trade shall be assigned a unique Responsibility Code, provided in RMS-QC. Within 14 calendar days of receipt of RMS-QC software from the Government, the Contractor shall deliver subcontractor administrative data in electronic format via E-mail.

1.6.1.3 Correspondence

All Contractor correspondence to the Government shall be identified with a serial number. Correspondence initiated by the Contractor's site office shall be prefixed with "S". Letters initiated by the Contractor's home (main) office shall be prefixed with "H". Letters shall be numbered starting from 0001. (e.g., H-0001 or S-0001). The Government's letters to the Contractor will be prefixed with "C".

1.6.1.4 Equipment

The Contractor's RMS-QC database shall contain a current list of equipment

planned for use or being used on the jobsite, including the most recent and planned equipment inspection dates.

1.6.1.5 Management Reporting

RMS-QC includes a number of reports that Contractor management can use to track the status of the project. The value of these reports is reflective of the quality of the data input, and is maintained in the various sections of RMS-QC. Among these reports are: Progress Payment Request worksheet, QA/QC comments, Submittal Register Status, Three-Phase Inspection checklists.

1.6.2 Finances

1.6.2.1 Pay Activity Data

The RMS-QC database shall include a list of pay activities that the Contractor shall develop in conjunction with the construction schedule. The sum of all pay activities shall be equal to the total contract amount, including modifications. Pay activities shall be grouped by Contract Line Item Number (CLIN), and the sum of the activities shall equal the amount of each CLIN. CLINs may include multiple activities, but activities may be assigned to only one such CLIN Item. The total of all CLINs equals the Contract Amount.

1.6.2.2 Payment Requests

All progress payment requests shall be prepared using RMS-QC. The Contractor shall complete the payment request worksheet and include it with the payment request. The work completed under the contract, measured as percent or as specific quantities, shall be updated at least monthly. After the update, the Contractor shall generate a payment request report using RMS-QC. The Contractor shall submit the payment requests with supporting data by E-mail with file attachment(s). If permitted by the Contracting Officer, a data diskette may be used instead of E-mail. A signed paper copy of the approved payment request is also required, which shall govern in the event of discrepancy with the electronic version.

1.6.3 Quality Control (QC)

RMS-QC provides a means to track implementation of the 3-phase QC Control System, prepare daily reports, identify and track deficiencies, document progress of work, and support other contractor QC requirements. The Contractor shall maintain this data on a daily basis. Entered data will automatically output to the RMS-QC generated daily report. The Contractor shall provide the Government a Contractor Quality Control (CQC) Plan within the time required in Section 01451, CONTRACTOR QUALITY CONTROL. Within seven calendar days of Government acceptance, the Contractor shall submit a data diskette or CD-ROM reflecting the information contained in the accepted CQC Plan: schedule, pay activities, features of work, submittal register, QC requirements, and equipment list.

1.6.3.1 Daily Contractor Quality Control (CQC) Reports.

RMS-QC includes the means to produce the Daily CQC Report. The Contractor may use other formats to record basic QC data. However, the Daily CQC Report generated by RMS-QC shall be the Contractor's official report. Data from any supplemental reports by the Contractor shall be summarized and consolidated onto the RMS-QC-generated Daily CQC Report. Daily CQC Reports shall be submitted as required by Section 01451, CONTRACTOR QUALITY CONTROL. Reports shall be submitted electronically to the Government using E-mail or diskette within 24 hours after the date covered by the report. Use of either mode of submittal shall be coordinated with the government representative. The Contractor shall also provide the Government a signed, printed copy of the daily CQC report.

1.6.3.2 Deficiency Tracking.

The Contractor shall use RMS-QC to track deficiencies. Deficiencies identified by the Contractor will be numerically tracked using QC Comments. The contractor shall maintain a current log of its QC comments in the RMS-QC database. The Government will log the deficiencies it has identified using its QA comments. The Government's QA comments will be included in its export file to the Contractor. The contractor will acknowledge receipt of these QA comments by specific number reference on the Daily CQC Report. The Contractor shall regularly update the correction status of both QC and QA comments.

1.6.3.3 Three-Phase Control Meetings

The Contractor shall maintain scheduled and actual dates and times of preparatory and initial control meetings in RMS-QC.

1.6.3.4 Accident/Safety Tracking.

The Government will issue safety comments, directions, or guidance whenever safety deficiencies are observed. The Government's safety comments will be included in its export file to the Contractor. The Contractor shall regularly update the correction status of the safety comments. In addition, the Contractor shall utilize RMS-QC to advise the Government of any accidents occurring on the jobsite. This brief supplemental entry is not to be considered as a substitute for completion of mandatory reports, e.g., ENG Form 3394 and OSHA Form 200.

1.6.3.5 Features of Work

The Contractor shall include a complete list of the features of work in the RMS-QC database. A feature of work may be associated with multiple pay activities. However, each pay activity (see subparagraph "Pay Activity Data" of paragraph "Finances") will only be linked to a single feature of work.

1.6.3.6 QC Requirements

The Contractor shall develop and maintain a complete list of QC Testing, Transfer Property listings, Installed Property listings, and User Training requirements in RMS-QC, all tied to individual pay activities. The Contractor shall update all data on these QC requirements as work

progresses, and shall promptly provide this information to the Government via RMS-QC.

1.6.4 Submittal Management

The contractor will initially be required to enter all required submittal information into RMS-QC. Thereafter, the Contractor shall maintain a complete list of all submittals, including completion of all data columns as described in Section 01330, SUBMITTAL PROCEDURES. Dates on which submittals are received and returned by the Government will be included in its export file to the Contractor. The Contractor shall use RMS-QC to track and transmit all submittals. ENG Form 4025, submittal transmittal form, and the submittal register update, ENG Form 4288, shall be produced using RMS-QC. RMS will be used to update, store and exchange submittal registers and transmittals, but will not be used for storage of actual submittals.

1.6.5 Schedule

The Contractor shall develop a construction schedule consisting of pay activities, in accordance with Contract Clause "Schedules for Construction Contracts", or Section 01320, PROJECT SCHEDULE, as applicable. This schedule shall be input and maintained in the RMS-QC database either manually or by using the Standard Data Exchange Format (SDEF) (see Section 01320 PROJECT SCHEDULE). The contractor shall be responsible for ensuring the SDEF is in the format required to upload the data to the RMS-QC Module; otherwise, the contractor will be required to enter the data manually. The updated schedule data shall be included with each pay request submitted by the Contractor.

1.6.6 Import/Export of Data

RMS-QC includes the ability to export Contractor data to the Government and to import Government-provided data.

1.7 IMPLEMENTATION

Contractor use of RMS-QC as described in the preceding paragraphs is mandatory. The Contractor shall ensure that sufficient resources are available to maintain its RMS-QC database, and to provide the Government with regular database updates. RMS-QC shall be an integral part of the Contractor's management of quality control.

1.8 DATA SUBMISSION VIA COMPUTER DISKETTE OR CD-ROM

The Government-preferred method for Contractor's submission of updates, payment requests, correspondence and other data is by E-mail with file attachment(s). For locations where this is not feasible, the Contracting Officer may permit use of computer diskettes or CD-ROM for data transfer. Data on the disks or CDs shall be exported using the RMS-QC built-in export function. If used, diskettes and CD-ROMs will be submitted in accordance with the following:

1.8.1 File Medium

The Contractor shall submit required data on 3-1/2" double-sided high-density diskettes formatted to hold 1.44 MB of data, capable of running under Microsoft Windows 95 or newer. Alternatively, CD-ROMs may be used. They shall conform to industry standards used in the United States. All data shall be provided in English.

1.8.2 Disk or CD-ROM Labels

The Contractor shall affix a permanent exterior label to each diskette and CD-ROM submitted. The label shall indicate in English, the RMS-QC file name, full contract number, project name, project location, data date, name and telephone number of person responsible for the data.

1.8.3 File Names

The Government will provide the file names to be used by the Contractor with the RMS-QC software.

1.9 WEEKLY SUBMISSION OF EXPORT FILES

The contractor shall, at a minimum, generate and submit weekly export file to the Gov't.

1.10 MONTHLY COORDINATION MEETING

The Contractor shall update the RMS-QC database each workday. At least monthly, the Contractor shall generate and submit an export file to the Government with schedule update and progress payment request. As required in Contract Clause "Payments", at least one week prior to submittal, the contractor shall meet with the Government representative to review the planned progress payment data submission for errors and omissions. The contractor shall make all required corrections prior to Government acceptance of the export file and progress payment request. Payment requests accompanied by incomplete or incorrect data submittals will be returned. The Government will not process progress payments until an acceptable RMS-QC export file is received.

1.11 NOTIFICATION OF NONCOMPLIANCE

The Contracting Officer will notify the Contractor of any detected noncompliance with the requirements of this specification. The Contractor shall take immediate corrective action after receipt of such notice. Such notice, when delivered to the Contractor at the work site, shall be deemed sufficient for the purpose of notification. The RMS-QC Module shall be completed to the satisfaction of the Contracting Officer prior to any contract payment (except for Bonds, and Insurance, as approved by the Contracting Officer).

-- End of Section --

SECTION 01320

PROJECT SCHEDULE: NETWORK ANALYSIS SYSTEM

PART 1 GENERAL

1.1 SUBMITTALS

Government approval is required for submittals with a "GA" designation; submittals having an "FIO" designation are for information only. Unless otherwise indicated, primary reviewer for these submittals will be the Contracting Officer (CO). The following shall be submitted in accordance with Section 01330 SUBMITTAL PROCEDURES:

SD-07 Schedules

Initial Project Schedule; GA. The primary reviewer of the Initial Project Schedule shall be the Scheduling Consultant.

Preliminary Project Schedule; FIO.

Periodic Schedule Updates; FIO`.

Four copies of the schedules showing codes, values, categories, numbers, items, etc., as required.

SD-08 Statements

Qualificationse; FIO.

Documentation showing qualifications of personnel preparing schedule reports.

SD-09 Reports

Narrative Report; FIO.

Four copies of reports showing numbers, descriptions, dates, float, starts, finishes, durations, sequences, etc., as required.

1.2 QUALIFICATIONS

The Contractor shall designate an authorized representative who shall be responsible for the preparation of all required project schedule reports. This person shall have previously created and reviewed computerized schedules. Qualifications of this individual shall be submitted to the Contracting Officer.

PART 2 PRODUCTS

(NOT USED)

PART 3 EXECUTION

3.1 GENERAL

Pursuant to the Contract Clause, SCHEDULE FOR CONSTRUCTION CONTRACTS a Project Schedule as described below shall be prepared. The scheduling of construction shall be the responsibility of the Contractor. Contractor management personnel shall actively participate in its development. Subcontractors and suppliers working on the project should also contribute in developing and maintaining an accurate Project Schedule. The approved Project Schedule shall be used to measure the progress of the work, to aid in evaluating time extensions, and to provide the basis of all progress payments.

3.2 BASIS FOR PAYMRENT

The schedule shall be the basis for measuring Contractor progress. Lack of an approved schedule or scheduling personnel shall result in an inability of the Contracting Officer to evaluate Contractor progress for the purposes of payment. Failure of the Contractor to provide all information, as specified below, shall result in the disapproval of the entire Project Schedule submission and the inability of the Contracting Officer to evaluate Contractor progress for payment purposes. In the case where Project Schedule revisions have been directed by the Contracting Officer and those revisions have not been included in the Project Schedule, then the Contracting Officer may hold retainage up to the maximum allowed by contract, each payment period, until revisions to the Project Schedule have been made.

3.3 PROJECT SCHEDULE

The computer software system utilized by the Contractor to produce the Project Schedule shall be capable of providing all requirements of this specification. Failure of the Contractor to meet the requirements of this specification shall result in the disapproval of the schedule. Manual methods used to produce any required information shall require approval by the Contracting Officer.

In the event the Contracting Officer does not posses the software that is utilized by the Contractor, the Contractor shall purchase for the use of the Contracting Officer identical programs. The Contractor shall train a minimum of two Contract Officer Representatives in the installation and the operation of the Contractor's version of the software. The Contracting Officer shall have complete vested use of the Contractor's version of the software.

3.3.1 Use of the Critical Path Method

The Critical Path Method (CPM) of network calculation shall be used to generate the Project Schedule. The Contractor shall provide the Project

Schedule in either the Precedence Diagram Method (PDM) or the Arrow Diagram Method (ADM).

3.3.2 Level of Detail Required

With the exception of the initial and preliminary schedule submission, the Project Schedule shall include an appropriate level of detail. Failure to develop or update the Project Schedule or provide data to the Contracting Officer at the appropriate level of detail, as specified by the Contracting Officer, shall result in the disapproval of the schedule. The Contracting Officer will use, but is not limited to, the following conditions to determine the appropriate level of detail to be used in the Project Schedule.

3.3.2.1 Activity Durations

Contractor submissions shall be required to follow the direction of the Contracting Officer regarding reasonable activity durations. Reasonable durations are those that allow the progress of activities to be accurately determined between payment periods. A rule of thumb, that the Contractor should use, is that less than 2 percent of all non-procurement activities' Original Durations shall be greater than 20 days.

3.3.2.2 Procurement Activities

Tasks related to the procurement of long lead materials or equipment shall be included as separate activities in the project schedule. Long lead materials and equipment are those materials that have a procurement cycle of over 90 days. Examples of procurement process activities include, but are not limited to: submittals, approvals, procurement, fabrication, delivery, installation, start-up, and testing.

3.3.2.3 Government Activities

Government and other agencies activities that could impact progress shall be shown. These activities include, but are not limited to: approvals, inspections, utility tie-in, Government Furnished Equipment (GFE) and notice to proceed for phasing requirements.

3.3.2.4 Responsibility

All activities shall be identified in the project schedule by the party responsible to perform the work. Responsibility includes, but is not limited to, the subcontracting firm, contractor work force, or government agency performing a given task. Activities shall not belong to more than one responsible party. The responsible party for each activity shall be identified by the Responsibility Code.

3.3.2.5 Work Areas

All activities shall be identified in the project schedule by the work area in which the activity occurs. Activities shall not be allowed to cover more than one work area. The work area of each activity shall be identified by the Work Area Code.

3.3.2.6 Modification or Claim Number

Any activity that is added or changed by contract modification or used to justify claimed time shall be identified by a mod or claim code that changed the activity. Activities shall not belong to more than one modification or claim item. The modification or claim number of each activity shall be identified by the Mod or Claim Number.

3.3.2.7 Bid Item

All activities shall be identified in the project schedule by the Bid Item to which the activity belongs. An activity shall not contain work in more than one bid item. the bid item for each appropriate activity shall be identified by the Bid Item Code

3.3.2.8 Phase of Work

All activities shall be identified in the project schedule by the phases of work in which the activity occurs. Activities shall not be allowed to contain work in more than one phase of work. The project phase of each activity shall be by the unique Phase of Work Code.

3.3.2.9 Feature of Work

All activities shall be identified in the project schedule according to the feature of work to which the activity belongs. Feature of work refers, but is not limited to a work breakdown structure for the project. The feature of work for each activity shall be identified by the Feature of Work Code.

3.3.3 Scheduled Project Completion

The schedule interval shall extend from notice-to-proceed to the contract completion date.

3.3.3.1 Start of Project Schedule

The schedule shall start no earlier than the date that the Notice to Proceed (NTP) was acknowledged. The Contractor shall include as the first activity in the project schedule an activity called "Start Project". The "Start Project" activity shall have: a "ES" constraint, a constraint date equal to the date that the NTP was acknowledged, and a zero day duration.

3.3.3.2 Constraint of Last Activity

Completion of the last activity in the schedule shall be constrained by the contract completion date. Calculation on project updates shall be such that if the early finish of the last activity falls after the contract completion date, then the float calculation shall reflect a negative float on the critical path. The Contractor shall include as the last activity in the project schedule an activity call "End Project". The "End Project" activity shall have: a "LF" constraint, a constraint date equal to the completion date for the project, and a zero day duration.

3.3.3.3 Early Project Completion

In the event the project schedule shows completion, the project prior to the contract completion date, the Contractor shall identify those activities that have been accelerated and/or those activities that are scheduled in parallel to support the Contractor's "early" completion. Contractor shall specifically address each of the activities noted at every project schedule update period to assist the Contracting Officer to evaluate the Contractor's ability to actually complete prior to the contract period.

3.3.4 Interim Completion Dates

Contractually specified interim completion dates shall also be constrained to show negative float if the early finish date of the last activity in that phase falls after the interim completion date.

3.3.4.1 Start Phase

The Contractor shall include as the first activity for a project phase an activity called "Start Phase X" where "X" refers to the phase of work. The "Start Phase X" activity shall have: a "ES" constraint, a constraint date equal to the date that the NTP was acknowledged, and a zero day duration.

3.3.4.2 End Phase

The Contractor shall include as the last activity in a project phase an activity called "End Phase X" where "X" refers to the phase of work. The "End Phase X" activity shall have: a "LF" constraint, a constraint date equal to the completion date for the project, and a zero day duration.

3.3.4.3 Phase X

The Contractor shall include a hammock type activity for each project phase called "Phase X" where "X:" refers to the phase of work. The "Phase X" activity shall be logically tied to the earliest and latest activities in the phase.

3.3.5 Default Progress Data Disallowed

Actual Start and Finish dates shall not be automatically updated by default mechanisms that may be included in CPM scheduling software systems. Actual Start and Finish dates on the CPM schedule shall match those dates provided from Contractor Quality Control Reports. Failure of the Contractor to document the Actual Start and Finish dates on the Daily Quality Control report for every in progress or completed activity and insure that the data contained on the Daily Quality Control reports is the sole basis for schedule updating shall result in the disapproval of the Contractor's schedule and the inability of the Contracting Officer to evaluate Contractor progress for payment purposes.

3.3.6 Out-of-Sequence Progress

Activities that have posted progress without predecessors being completed (Out-of-Sequence Progress) shall be allowed only by the case-by-case approval of the Contracting Officer. The Contracting Officer may direct that changes in schedule logic be made to correct any or all out-of-sequence work.

3.3.7 Extended Non-Work Periods

Designation of Holidays to account for non-work periods of over 5 days shall not be allowed. Non-work periods of over 5 days shall be identified by addition of activities that represent the delays. Modifications to the logic of the project schedule shall be made to link those activities that may have been impacted by the delays to the newly added delay activities.

3.3.8 Negative Lags

Lag durations contained in the project schedule shall not have a negative value.

3.4 PROJECT SCHEDULE SUBMISSIONS

The Contractor shall provide the submissions as described below. The data disk, reports, and network diagrams required for each submission are contained in paragraph SUBMISSION REQUIREMENTS.

3.4.1 Preliminary Project Schedule Submission

The Preliminary Project Schedule, defining the Contractor's planned operations for the first 60 calendar days shall be submitted for approval within 10 calendar days after Notice to Proceed is acknowledged. The approved preliminary schedule shall be used for payment purposes not to exceed 60 calendar days after Notice to Proceed.

3.4.2 Initial Project Schedule Submission

The Initial Project Schedule shall be submitted for approval within 40 calendar days after Notice to Proceed. The schedule shall provide a reasonable sequence of activities which represent work through the entire project and shall be at a reasonable level of detail.

3.4.3 Periodic Schedule Updates

Based on the result of progress meetings, specified in "Periodic Progress Meetings," the Contractor shall submit periodic schedule updates. These submissions shall enable the Contracting Officer or to assess Contractor's progress. If the Contractor fails or refuses to furnish the information and project schedule data, which in the judgement of the Contracting Officer or authorized representative, is necessary for verifying the contractor's progress, the Contractor shall be deemed not to have provided an estimate upon which progress payment may be made.

3.5 SUBMISSION REQUIREMENTS

The following items shall be submitted by the Contractor for the initial

submission, and every periodic project schedule update throughout the life of the project:

3.5.1 Data Disks

Two data disks containing the project schedule shall be provided. Data on the disks shall be in the format specified in Appendix A, " Standard Data Exchange Format".

3.5.1.1 File Medium

Required data shall be submitted on 3.5 disks, formatted to hold 1.44 MB of data, under the MS-DOS Version 5.0 operating system.

3.5.1.2 Disk Label

A permanent exterior label shall be affixed to each disk submitted. The label shall indicate the type of schedule (Initial, Update, or Change), full contract number, project name, project location, data date, name and telephone number or person responsible for the schedule, and the MS-DOS version used to format the disk.

3.5.1.3 File Name

Each file submitted shall have a name related to either the schedule data date, project name, or contract number. The Contractor shall develop a naming convention that will insure that the names of the files submitted are unique. the Contractor shall submit the file naming convention to the Contracting Officer for approval.

3.5.2 Narrative Report

A Narrative Report shall be provided with each update of the project schedule. This report shall be provided as the basis of the Contractor's progress payment request. The Narrative Report shall include: a description of activities along the 4 most critical paths, a description of current and anticipated problem areas or delaying factors and their impact, and an explanation of corrective actions taken.

3.5.3 Approved Changes Verification

Only project schedule changes that have been previously approved by the Contracting Officer shall be included in the schedule submission. The Narrative Report shall specifically reference, on an activity by activity basis, all changes made since the previous period and relate each change to documented, approved schedule changes.

3.5.4 Schedule Reports

The format for each activity for the schedule reports listed below shall contain: Activity Numbers, Activity Description, Original Duration, Remaining Duration, Early Start Date, Early Finish Date, Late Start Date, Late Finish Date, Total Float. Actual Start and Actual Finish Dates shall be printed for those activities in-progress or completed.

3.5.4.1 Activity Report

A list of all activities sorted according to activity number or "I-NODE" AND "J-NODE" and then sorted according to Early Start Date. For completed activities the Actual Start Date shall be used as the secondary sort.

3.5.4.2 Logic Report

A list of Preceding and Succeeding activities for every activity in ascending order by activity number and then sorted according to Early Start Date. For completed activities the Actual Start Date shall be used as the secondary sort.

3.5.4.3 Total Float Report

A list of all activities sorted in ascending order of total float. Activities which have the same amount of total float shall be listed in ascending order of Early Start Dates.

3.5.4.4 Earnings Report

A compilation of the Contractor's Total Earnings on the project from the Notice to Proceed until the most recent Monthly Progress Meeting. This report shall reflect the Earnings of specific activities based on the agreements made in the field and approved between the Contractor and Contracting Officer at the most recent Monthly Progress Meeting. Provided that the Contractor has provided a complete schedule update, this report shall serve as the basis of determining Contractor Payment. Activities shall be grouped by bid item and sorted by activity numbers. This report shall: sum all activities in a bid item and provide a bid item percent; complete and sum all bid items to provide a total project percent complete. The printed report shall contain, for each activity: Activity Number or "i-node" and "j-node", Activity Description, Original Budgeted Amount, Total Quantity, Quantity to Date, Percent Complete (based on cost), Earnings to Date.

3.5.5 Network Diagram

The network diagram shall be required on the initial schedule submission and on bi-monthly (60 days) schedule update submissions. In addition to other submission requirements, a single mylar reproduceable 20 inch by 30 inch size shall be submitted. The diagram shall also The network diagram shall depict and display the order and interdependence of activities and the sequence in which the work is to be accomplished. The Contracting Officer will use, but is not limited to, the following conditions to review compliance with this paragraph:

3.5.5.1 Continuous Flow

Diagrams shall show a continuous flow from left to right with no arrows from right to left. The activity or event number, description, duration, and estimated earned value shall be shown on the diagram.

3.5.5.2 Project Milestone Dates

Dates shall be shown on the diagram for start of project, any contract required interim completion dates, and contract completion dates.

3.5.5.3 Critical Path

The critical path shall be clearly shown.

3.5.5.4 Banding

Activities shall be grouped to assist in the understanding of the activity sequence. Typically, this flow will group activities by category of work, work area and/or responsibility.

3.5.5.5 S-Curves

Earnings curves showing projected early and late earnings and earnings to date.

3.6 PERIODIC PROGRESS MEETINGS

Progress meetings to discuss payment shall include a monthly on- site meeting or other regular intervals mutually agreed to at the preconstruction conference. During this meeting the Contractor will describe, on an activity by activity basis, all proposed revisions and adjustments to the project schedule required to reflect the current status of the project. The Contracting Officer will approve activity progress, proposed revisions, and adjustments as appropriate. See additional requirements specified in Section 00800.

3.6.1 Meeting Attendance

The Contractor's Project Manager and Scheduler shall attend the regular progress meeting.

3.6.2 Update Submission Following Progress Meeting

A complete update of the project schedule containing all approved progress, revisions, and adjustments, based on the regular progress meeting, shall be submitted not later than 4 working days after the monthly progress meeting.

3.6.3 Progress Meeting Contents

Update information, including Actual Start Dates, Actual Finish Dates, Remaining Durations, and Cost to Date shall be subject to the approval of the Contracting Officer. The following minimum set of items which the Contractor shall address, on an activity by activity basis, during each progress meeting.

3.6.3.1 Start and Finish Dates

The Actual Start and Actual Finish dates for each activity currently in-progress or completed activities.

3.6.3.2 Time Completion

The estimated Remaining Duration for each activity in-progress. Time-based progress calculations must be based on Remaining Duration for each activity.

3.6.3.3 Cost Completion

The earnings for each activity started. Payment shall be based on earnings for each in-progress or completed activity. Payment for individual activities shall not be made for work that contains quality defects. A portion of the overall project amount may be retained based on delays of activities.

3.6.3.4 Logic Changes

All logic changes pertaining to Notice to Proceed on change orders, change orders to be incorporated into the schedule, contractor proposed changes in work sequence, corrections to schedule logic for out-of-sequence progress, lag durations, and other changes that have been made pursuant to contract provisions shall be specifically identified and discussed.

3.6.3.5 Other Changes

Other changes required due to delays in completion of any activity or group of activities are those delays beyond the Contractors control such as strikes and unusual weather. Also included are delays encountered due to submittals, Government Activities, deliveries or work stoppage which makes re-planning the work necessary, and when the schedule does not represent the actual prosecution and progress of the work.

3.7 REQUESTS FOR TIME EXTENSIONS

In the event the Contractor requests an extension of the contract completion date, he shall furnish such justification, project schedule data and supporting evidence as the Contracting Officer may deem necessary for a determination as to whether or not the Contractor is entitled to an extension of time under the provisions of the contract. Submission of proof of delay, based on revised activity logic, duration, and costs (updated to the specific date that the delay occurred) is obligatory to any approvals.

3.7.1 Justification of Delay

The project schedule must clearly display that the Contractor has used, in full, all the float time available for the work involved with this request. The Contracting Officer's determination as to the number of allowable days of contract extension, shall be based upon the project schedule updates in effect for the time period in question and other factual information. Actual delays that are found to be caused by the Contractor's own actions, which result in the extension of the schedule, shall not be a cause for a time extension to the contract completion date.

3.7.2 Submission Requirements

The Contractor shall submit a justification for each request for a change in the contract completion date of under two weeks based upon the most recent schedule update at the time of the Notice to Proceed or constructive direction issued for the change. Such a request shall be in accordance with the requirements of other appropriate Contract Clauses and shall include, as a minimum:

a. A list of affected activities, with their associated project schedule activity number.
b. A brief explanation of the causes of the change.
c. An analysis of the overall impact of the changes proposed.
d. A sub-network of the affected area.

Activities impacted in each justification for change shall be identified by a unique activity code contained in the required data file.

3.7.3 Additional Submission Requirements

For any request for time extension for over 2 weeks, the Contracting Officer may request an interim update with revised activities for a specific change request. The Contractor shall provide this disk within 4 days of the Contracting Officer's request.

3.8 DIRECTED CHANGES

If Notice to Proceed (NTP) is issued for changes prior to settlement of price and/or time, the Contractor shall submit proposed schedule revisions to the Contracting Officer within 2 weeks of the NTP being issued. The proposed revisions to the schedule will be approved by the Contracting Officer prior to inclusion of those changes within the project schedule. If the Contractor fails to submit the proposed revisions, the Contracting Officer may furnish the Contractor suggested revisions to the project schedule. The Contractor shall include these revisions in the project schedule until the Contractor submits revisions, and final changes and impacts have been negotiated. If the Contractor has any objections to the revisions furnished by the Contracting Officer, then the Contractor shall advise the Contracting Officer within 2 weeks of receipt of the revisions. Regardless of the objections, the Contractor will continue to update their schedule with the Contracting Officer's revisions until a mutual agreement in the revisions may be made. If the Contractor fails to submit alternative revisions within 2 weeks of receipt of the Contracting Officer's proposed revisions, the Contractor will be deemed to have concurred with the Contracting Officer's proposed revisions. The proposed revisions will then be the basis for an equitable adjustment for performance of the work.

3.9 OWNERSHIP OF FLOAT

Float available in the schedule, at any time, shall not be considered for the exclusive use of either the Government or the Contractor.

-- End of Section --

SECTION 01330

SUBMITTAL PROCEDURES

PART 1 GENERAL

1.1 SUMMARY

This section covers procedures to be used in making submittals called for in the contract documents. In contracts which contain specific "Contractor Quality Control" requirements, the Contractor's Quality Control Representative shall carry out duties associated with submittal procedures. In contract which do not contain specific CQC requirements, reference to "CQC Representative" shall be interpreted as reference to the Contractor's authorized representative, and references to "CQC Requirements" or "CQC Clauses" shall be interpreted as "requirements or clauses elsewhere in the contract."

1.2 SUBMITTAL IDENTIFICATION

Submittals required are identified by SD numbers as follows:

SD-01 Data

SD-04 Drawings

SD-06 Instructions

SD-07 Schedules

SD-08 Statements

SD-09 Reports

SD-13 Certificates

SD-14 Samples

SD-18 Records

SD-19 Operation and Maintenance Manuals

1.3 SUBMITTAL CLASSIFICATION

Submittals are classified as follows:

1.3.1 Government Approved (GA)

Governmental approval is required for extensions of design, critical materials, deviations, equipment whose compatibility with the entire system must be checked, and other items as designated by the Contracting Officer.

Within the terms of the Contract Clause entitled "Specifications and Drawings for Construction," they are considered to be "shop drawings."

1.3.2 Information Only (FIO)

All submittals not requiring Government approval will be for information only. They are not considered to be "shop drawings" within the terms of the Contract Clause referred to above.

1.4 REVIEWER CODES

Reviewer codes on the Submittal Reqister (ENG Form 4288) are identified as follows:

A - Area Engineer

E - Engineering (Design Branch)

AE- Architect/Engineer

1.5 APPROVED SUBMITTALS

The Contracting Officer's approval of submittals shall not be construed as a complete check, but will indicate only that the general method of construction, materials, detailing and other information are satisfactory. Approval will not relieve the Contractor of the responsibility for any error which may exist, as the Contractor under the CQC requirements of this contract is responsible for dimensions, the design of adequate connections and details, and the satisfactory construction of all work. After submittals have been approved by the Contracting Officer, no resubmittal for the purpose of substituting materials or equipment will be considered unless accompanied by an explanation of why a substitution is necessary.

1.6 DISAPPROVED SUBMITTALS

The Contractor shall make all corrections required by the Contracting Officer and promptly furnish a corrected submittal in the form and number of copies specified for the initial submittal. If the Contractor considers any correction indicated on the submittals to constitute a change to the contract, a notice in accordance with the Contract Clause "Changes" shall be given promptly to the Contracting Officer.

1.7 WITHHOLDING OF PAYMENT

Payment for materials incorporated in the work will not be made if required approvals have not been obtained.

PART 2 PRODUCTS (Not Applicable)

PART 3 EXECUTION

3.1 GENERAL

The Contractor shall make submittals as required by the specifications.

The Contracting Officer may request submittals in addition to those specified when deemed necessary to adequately describe the work covered in the respective sections. Units of weights and measures used on all submittals shall be the same as those used in the contract drawings. Each submittal shall be complete and in sufficient detail to allow ready determination of compliance with contract requirements. Prior to submittal, all items shall be checked and approved by the Contractor's Quality Control (CQC) representative and each item shall be stamped, signed, and dated by the CQC representative indicating action taken. Proposed deviations from the contract requirements shall be clearly identified. Submittals shall include items such as: Contractor's, manufacturer's, or fabricator's drawings; descriptive literature including (but not limited to) catalog cuts, diagrams, operating charts or curves; test reports; test cylinders; samples; O&M manuals (including parts list); certifications; warranties; and other such required submittals. Submittals requiring Government approval shall be scheduled and made prior to the acquisition of the material or equipment covered thereby. Samples remaining upon completion of the work shall be picked up and disposed of in accordance with manufacturer's Material Safety Data Sheets (MSDS) and in compliance with existing laws and regulations.

3.2 SUBMITTAL REGISTER (ENG FORM 4288)

At the end of this section is one set of ENG Form 4288 listing items of equipment and materials for which submittals are required by the specifications; this list may not be all inclusive and additional submittals may be required. Columns "d" through "r" have been completed by the Government; the Contractor shall complete columns "a" and "s" through "u" and submit the forms (hard copy plus associated electronic file) to the Contracting Officer for approval within 30 calendar days after Notice to Proceed (15 days if construction time is 180 days or less). If the Government supplies the ENG Form 4288 on the Resident Management System (RMS) electronic format, the contractor will be required to process and update the 4288 electronically, and make appropriate electronic submissions to the Government. Otherwise, the Contractor will be given the submittal register as a diskette containing the computerized ENG Form 4288 and instructions on the use of the diskette. In both cases, the Contractor shall update the 4288 electronically, and shall submit it to the Government together with the monthly payment request. The approved submittal register will become the scheduling document and will be used to control submittals throughout the life of the contract. The submittal register and the progress schedules shall be coordinated.

3.3 SCHEDULING

Submittals covering component items forming a system or items that are interrelated shall be scheduled to be coordinated and submitted concurrently. Certifications to be submitted with the pertinent drawings shall be so scheduled. Adequate time (a minimum of 30 calendar days exclusive of mailing time) shall be allowed and shown on the register for review and approval. No delay damages or time extensions will be allowed for time lost in late submittals. An additional 10 calendar days shall be allowed and shown on the register for review and approval of submittals for food service equipment,refrigeration and HVAC control systems, computer

software for specialty systems, electrical substations, and studies including electrical system coordination studies.

3.4 TRANSMITTAL FORM (ENG FORM 4025)

The sample transmittal form (ENG Form 4025) attached to this section shall be used for submitting both Government approved and information only submittals in accordance with the instructions on the reverse side of the form. These forms will be furnished to the Contractor. This form shall be properly completed by filling out all the heading blank spaces and identifying each item submitted. Special care shall be exercised to ensure proper listing of the specification paragraph and/or sheet number of the contract drawings pertinent to the data submitted for each item. If the contractor is required in another section of the specifications to utilize the RMS system, the contractor will be required to generate and process this form electronically using the RMS system.

3.5 SUBMITTAL PROCEDURE

Submittals shall be made as follows:

3.5.1 Procedures

At the Quality Control Coordination meeting, or preconstruction conference, the Contractor shall ascertain the name and address of each individual, agency, or firm who is designated to normally receive items for approval, for information or samples. The contractor shall complete ENG Form 4025, entering each item requiring a separate approval action as a separate item on the form, for each transmittal. A transmittal may consist of one or more 4025 sheets. The transmittal, consisting of ENG Form 4025 plus all applicable submittals, is then sent to the appropriate individual. On critical items the Contractor is encouraged to confirm receipt via telephone. The Contractor shall submit seven copies of submittals for approval and one for items for information. Column "r" of Eng. Form 4288 will indicate the primary reviewer. Column "aa" of Eng. Form 4288 will indicate which consultant of the Architect requires distribution. In Column "r" and Column "aa" of the Eng. Form 4288, the following is a list of the codes to be used, along with their meanings:

"CO Contracting Officer

"A Architect
Sasaki Associates, Inc.
64 Pleasant Street
Watertown, MA 02472
Attn.: Mr. Ed Calamari

"ATC Hazardous Materials Consultant:
ATC Environmental, Inc.
600 West Cummings Park
Suite #6500
Woburn, MA 01801-6350
Att.: Mr. Charles Hughs

"Civil Civil Engineering Consultant:
Sasaki Associates, Inc.
64 Pleasant Street
Watertown, MA 02472
Att.: Mr. Robert Poulos

"McPhail Geotechnical Consultant:
McPhail Associates, Inc.
30 Norfolk Street
Cambridge, MA 02139
Attn.: Mr. Bob Hoyler

"LEM Structural Consultant:
LeMessurier Consultants
675 Massachusetts Avenue
Cambridge, MA 02139
Attn.: Mr. Roger McCoy

"Cosentini MEP Consultant:
Cosentini Associates
One Broadway
Cambridge, MA 02142
Attn.: Mr. Robert Hamilton

"LMB Scheduling Consultant:
Lehrer McGovern Bovis
200 Park Avenue; 9th Floor
New York, NY 10166
Attn.: Mr. Mark Harari

Distribution shall be as follows:

When Submittals are FOR INFORMATION ONLY (FIO):

The designation "CO" will appear in Column "r" of Eng. Form 4288, distribute copies of the Submittal as follows:

1 Copy to the Architect
2 Copies to Contracting Officer

When Submittals are for GOVERNMENTAL APPROVAL (GA):

The designation "A" will appear in Column "r" of Eng. Form 4288, distribute copies of the Submittal as follows:

1 Copy to the Contracting Officer
7 Copies to the Architect

When the designation "A" appears in Column "r", and Consultant's code (listed above) appears in Column "aa" of Eng. Form 4288, distribute copies of the Submittal as follows:

1 Copy to the Contracting Officer
1 Copy to the Architect
7 Copies to the Consultant

Note The individual Specification Sections state when the reviewer is a consultant.

When the designation "CO" appears in Column "r" of Eng. Form 4288, distribute copies of the submittals as follows:

1 copy to Architect

7 copies to the Contracting Officer

3.5.2 Deviations

For submittals which include proposed deviations requested by the Contractor, the column "variation" of ENG Form 4025 shall be checked. The Contractor shall set forth in writing the reason for any deviations and annotate such deviations on the submittal. The Government reserves the right to rescind inadvertent approval of submittals containing unnoted deviations.

3.6 CONTROL OF SUBMITTALS

The Contractor shall carefully control its procurement operations to ensure that each individual submittal is made on or before the Contractor scheduled submittal date shown on the approved "Submittal Register."

3.7 GOVERNMENT APPROVED SUBMITTALS

Upon completion of review of submittals requiring Government approval, the submittals will be identified as having received approval by being so stamped and dated. Four copies of the submittal will be retained by the Contracting Officer and three copies of the submittal will be returned to the Contractor.

3.8 INFORMATION ONLY SUBMITTALS

Normally submittals for information only will not be returned. Approval of the Contracting Officer is not required on information only submittals. The Government reserves the right to require the Contractor to resubmit any item found not to comply with the contract. This does not relieve the Contractor from the obligation to furnish material conforming to the plans and specifications; will not prevent the Contracting Officer from requiring removal and replacement of nonconforming material incorporated in the work; and does not relieve the Contractor of the requirement to furnish samples

for testing by the Government laboratory or for check testing by the Government in those instances where the technical specifications so prescribe.

3.9 STAMPS

Stamps used by the Contractor on the submittal data to certify that the submittal meets contract requirements shall be similar to the following:

CONTRACTOR

(Firm Name)

_____ Approved

_____ Approved with corrections as noted on submittal data and/or attached sheets(s).

SIGNATURE: _____

TITLE: _____

DATE: _____

-- End of Section --

SUBMITTAL REGISTER
(ER 415 1-10)

CONTRACT NO.

TITLE AND LOCATION
Arvin Cadet Physical Development Center, Phase 2/3

CONTRACTOR

SPECIFICATION SECTION
01010

ACTIVITY NO a.	TRANSMITTAL NO. b.	ITEM NO c.	SPECIFICATION PARAGRAPH NUMBER d.	DESCRIPTION OF ITEM SUBMITTED e.	TYPE OF SUBMITTAL										CLASSIFICATION		REVIEWER r.	CONTRACTOR SCHEDULE DATES			CONTRACTOR ACTION		GOVERNMENT ACTION			REMARKS aa.
															INFORMATION p.	APPROVED q.		SUBMIT s.	APPROVAL NEEDED BY t.	MATERIAL NEEDED BY u.	CODE v.	DATE w.	SUBMIT TO GOVERNMENT x.	CODE y.	DATE z.	
			1.2	Videography Schedule																						
			1.2	Interruption Plan and Schedules																						
			1.2	List of Information											X											
			1.2	Videographers Work											X											
			1.2	Progress Video Tapes																						
			1.2	Record Video Tapes											X											

SUBMITTAL REGISTER
(ER 415 1-10)

CONTRACT NO.

TITLE AND LOCATION: **Arvin Cadet Physical Development Center, Phase 2/3**

CONTRACTOR

SPECIFICATION SECTION: **01025**

ACTIVITY NO. a.	TRANS-MITTAL NO. b.	ITEM NO. c.	SPECIFICATION PARAGRAPH NUMBER d.	DESCRIPTION OF ITEM SUBMITTED e.	TYPE OF SUBMITTAL: INS	STA	CERTI	CLASSIFICATION: INFORMATION ONLY p.	GO APPROVED q.	REVIEWER r.	CONTRACTOR SCHEDULE DATES: SUBMIT s.	APPROVAL NEEDED BY t.	MATERIAL NEEDED BY u.	CONTRACTOR ACTION: CODE v.	DATE w.	SUBMIT TO GOVERNMENT x.	GOVERNMENT ACTION: CODE y.	DATE z.	REMARKS aa.
			1.3	Quantity Surveys				X											

SUBMITTAL REGISTER
(ER 415 1-10)

CONTRACT NO.

TITLE AND LOCATION: **Arvin Cadet Physical Development Center, Phase 2/3**

CONTRACTOR

SPECIFICATION SECTION: **01320**

ACTIVITY NO. a.	TRANS-MITTAL NO. b.	ITEM NO. c.	SPECIFICATION PARAGRAPH NUMBER d.	DESCRIPTION OF ITEM SUBMITTED e.	TYPE OF SUBMITTAL										CLASSIFICATION			CONTRACTOR SCHEDULE DATES			CONTRACTOR ACTION			GOVERNMENT ACTION		REMARKS aa.
						INS	STA	CERTI							INFORMATION	GO APPROVED	REVIEWER r.	SUBMIT s.	APPROVAL NEEDED BY t.	MATERIAL NEEDED BY u.	CODE v.	DATE w.	SUBMIT TO GOVERNMENT x.	CODE y.	DATE z.	
			1.1	Initial Project Schedule																						
			1.1	Preliminary Project Schedule																						
			1.1	Periodic Schedule Updates																						
			1.1	FIO`			X																			
			1.1	Qualificationse				(							X											
			1.1	Narrative Report											X											

SUBMITTAL REGISTER
(ER 415 1-10)

CONTRACT NO.

TITLE AND LOCATION
Arvin Cadet Physical Development Center, Phase 2/3

CONTRACTOR

SPECIFICATION SECTION
01420

ACTIVITY NO a.	TRANSMITTAL NO. b.	ITEM NO c.	SPECIFICATION PARAGRAPH NUMBER d.	DESCRIPTION OF ITEM SUBMITTED e.	TYPE OF SUBMITTAL: INSERT	CLASSIFICATION: INFORMATION ONLY p.	CLASSIFICATION: GOVERNMENT APPROVED q.	REVIEWER r.	CONTRACTOR SCHEDULE DATES: SUBMIT s.	CONTRACTOR SCHEDULE DATES: APPROVAL NEEDED BY t.	CONTRACTOR SCHEDULE DATES: MATERIAL NEEDED BY u.	CONTRACTOR ACTION: CODE v.	CONTRACTOR ACTION: DATE w.	GOVERNMENT ACTION: SUBMIT TO GOVERNMENT x.	GOVERNMENT ACTION: CODE y.	GOVERNMENT ACTION: DATE z.	REMARKS aa.
			1.2	Qualifications:		X											
			1.2	Accident Prevention Plan													
			1.2	Activity Hazard Analysis													
			1.2	Daily Inspection Logs													
			1.2	Energized Line Work Plan													
			1.2	Monthly Exposure Reports													
			1.2	Proposed Temporary Power Plan													
			1.2	Radiation Safety Program													
			1.2	Certification	X		X										

SUBMITTAL REGISTER
(ER 415 1-10)

CONTRACT NO.

TITLE AND LOCATION: **Arvin Cadet Physical Development Center, Phase 2/3**

CONTRACTOR

SPECIFICATION SECTION: **01451**

ACTIVITY NO. a.	TRANS-MITTAL NO. b.	ITEM NO. c.	SPECIFICATION PARAGRAPH NUMBER d.	DESCRIPTION OF ITEM SUBMITTED e.	TYPE OF SUBMITTAL: INS	STA	CERTI	CLASSIFICATION: INFORMATION ONLY p.	GO APPROVED q.	REVIEWER r.	CONTRACTOR SCHEDULE DATES: SUBMIT s.	APPROVAL NEEDED BY t.	MATERIAL NEEDED BY u.	CONTRACTOR ACTION: CODE v.	DATE w.	SUBMIT TO GOVERNMENT x.	GOVERNMENT ACTION: CODE y.	DATE z.	REMARKS aa.
			1.2	Quality Control Plan					X										

SUBMITTAL REGISTER
(ER 415 1-10)

CONTRACT NO.

TITLE AND LOCATION
Arvin Cadet Physical Development Center, Phase 2/3

CONTRACTOR

SPECIFICATION SECTION
01452

ACTIVITY NO a.	TRANSMITTAL NO. b.	ITEM NO c.	SPECIFICATION PARAGRAPH NUMBER d.	DESCRIPTION OF ITEM SUBMITTED e.	TYPE OF SUBMITTAL: INS f.	STA g.	CERT h.	[illegible] i.	[illegible] j.	[illegible] k.	[illegible] l.	[illegible] m.	[illegible] n.	CLASSIFICATION: INFORM o.	CLASSIFICATION: APPROVED p.	GOVT REVIEWER q.	CONTRACTOR SCHEDULE DATES: SUBMIT r.	CONTRACTOR SCHEDULE DATES: APPROVAL NEEDED BY s.	CONTRACTOR SCHEDULE DATES: MATERIAL NEEDED BY t.	CONTRACTOR ACTION: CODE u.	CONTRACTOR ACTION: DATE v.	GOVERNMENT ACTION: SUBMIT TO GOVERNMENT w.	GOVERNMENT ACTION: CODE x.	GOVERNMENT ACTION: DATE y.	REMARKS z.
			1.2	Test Plans		X									X										

SUBMITTAL REGISTER
(ER 415 1-10)

CONTRACT NO.

TITLE AND LOCATION: **Arvin Cadet Physical Development Center, Phase 2/3**

CONTRACTOR

SPECIFICATION SECTION: **01500**

ACTIVITY NO. a.	TRANS-MITTAL NO. b.	ITEM NO. c.	SPECIFICATION PARAGRAPH NUMBER d.	DESCRIPTION OF ITEM SUBMITTED e.	TYPE OF SUBMITTAL: INS	STA	CERTI	CLASSIFICATION: INFORMATION	GO APPROVED g.	REVIEWER r.	CONTRACTOR SCHEDULE DATES: SUBMIT s.	APPROVAL NEEDED BY t.	MATERIAL NEEDED BY u.	CONTRACTOR ACTION: CODE v.	DATE w.	SUBMIT TO GOVERNMENT x.	GOVERNMENT ACTION: CODE y.	DATE z.	REMARKS aa.
			1.2.1	Site Plan	X				X										
			1.3.3.2	Weatherprotection Procedure Reports															

SUBMITTAL REGISTER
(ER 415 1-10)

CONTRACT NO.

TITLE AND LOCATION: **Arvin Cadet Physical Development Center, Phase 2/3**

CONTRACTOR

SPECIFICATION SECTION: **01568**

ACTIVITY NO. a.	TRANS-MITTAL NO. b.	ITEM NO. c.	SPECIFICATION PARAGRAPH NUMBER d.	DESCRIPTION OF ITEM SUBMITTED e.	TYPE OF SUBMITTAL: INS	STA	CERTI	CLASSIFICATION: INFORMATION	GO APPROVED	REVIEWER r.	CONTRACTOR SCHEDULE DATES: SUBMIT s.	APPROVAL NEEDED BY t.	MATERIAL NEEDED BY u.	CONTRACTOR ACTION: CODE v.	DATE w.	SUBMIT TO GOVERNMENT x.	GOVERNMENT ACTION: CODE y.	DATE z.	REMARKS aa.
			1.4	List of Proposed Materials															
			1.4	Proposed Methods					X										
			1.4	Erosion Control Program															
			1.4	Filter Fabric			X		X										

SUBMITTAL REGISTER
(ER 415 1-10)

CONTRACT NO.

TITLE AND LOCATION: **Arvin Cadet Physical Development Center, Phase 2/3**

CONTRACTOR

SPECIFICATION SECTION: **02070**

ACTIVITY NO. a.	TRANS-MITTAL NO. b.	ITEM NO. c.	SPECIFICATION PARAGRAPH NUMBER d.	DESCRIPTION OF ITEM SUBMITTED e.	TYPE OF SUBMITTAL: INS	STA	CERTI	CLASSIFICATION: INFORMATION	GO APPROVED g.	REVIEWER r.	CONTRACTOR SCHEDULE DATES: SUBMIT s.	APPROVAL NEEDED BY t.	MATERIAL NEEDED BY u.	CONTRACTOR ACTION: CODE v.	DATE w.	SUBMIT TO GOVERNMENT x.	GOVERNMENT ACTION: CODE y.	DATE z.	REMARKS aa.
			1.2	Equipment Lists					X										
			1.2	Accident Prevention Plan (APP)															
			1.2	Activity Hazard Analysis (AHA)															
			1.2	PCB-Containing Ballasts & Mercury-Containing Light Units Inventory															
			1.2	PCB Ballast and Mercury Light Bulb Management Plan															
			1.2	PCB Ballast and Mercury Light Bulb															
			1.2	Emergency Contingency Plan															
			1.2	Hazardous Waste Management Plan															
			1.2	Waste Handling and Site Storage Plan															
			1.2	Waste Collection and Disposal Plan															

SUBMITTAL REGISTER
(ER 415 1-10)

CONTRACT NO.

TITLE AND LOCATION
Arvin Cadet Physical Development Center, Phase 2/3

CONTRACTOR

SPECIFICATION SECTION
02080

ACTIVITY NO a.	TRANSMITTAL NO. b.	ITEM NO c.	SPECIFICATION PARAGRAPH NUMBER d.	DESCRIPTION OF ITEM SUBMITTED e.	TYPE OF SUBMITTAL: INSTA CERT CONF INFORM	CLASSIFICATION: INFORMATION p.	CLASSIFICATION: GOVT APPROVED q.	REVIEWER r.	CONTRACTOR SCHEDULE DATES: SUBMIT s.	CONTRACTOR SCHEDULE DATES: APPROVAL NEEDED BY t.	CONTRACTOR SCHEDULE DATES: MATERIAL NEEDED BY u.	CONTRACTOR ACTION: CODE v.	CONTRACTOR ACTION: DATE w.	GOVERNMENT ACTION: SUBMIT TO GOVERNMENT x.	GOVERNMENT ACTION: CODE y.	GOVERNMENT ACTION: DATE z.	REMARKS aa.
			1.5	Materials and Equipment													
			1.5	Site Layout	X		X										
			1.5	Accident Prevention Plan (APP)													
			1.6	Qualifications	X		X										
			1.12	Training Program		X											
			1.11	Medical Requirements													
			2.1	Encapsulants	X		X										
			1.14	Hazard Communication Program													
			3.9	Exposure Assessment and Air Monitoring													
			1.21	Local Exhaust Ventilation													
			1.15	Licenses, Permits and Notifications													
			1.5	Vacuum, Filtration and Ventilation Equipment													
			1.13	Respiratory Protection Program													
			3.11	Cleanup and Disposal													

SUBMITTAL REGISTER
(ER 415 1-10)

CONTRACT NO.

TITLE AND LOCATION: **Arvin Cadet Physical Development Center, Phase 2/3**

CONTRACTOR

SPECIFICATION SECTION: **02090**

ACTIVITY NO. a.	TRANS-MITTAL NO. b.	ITEM NO. c.	SPECIFICATION PARAGRAPH NUMBER d.	DESCRIPTION OF ITEM SUBMITTED e.	TYPE OF SUBMITTAL: INS	STA	CERTI	CLASSIFICATION: INFORMATION	GO APPROVED	REVIEWER r.	CONTRACTOR SCHEDULE DATES: SUBMIT s.	APPROVAL NEEDED BY t.	MATERIAL NEEDED BY u.	CONTRACTOR ACTION: CODE v.	DATE w.	SUBMIT TO GOVERNMENT x.	GOVERNMENT ACTION: CODE y.	DATE z.	REMARKS aa.
			1.2	Equipment List					X										
			1.2	Accident Prevention Plan (APP)															
			1.2	Acitivity Hazard Analysis (AHA)															
			1.2	Licenses, Permits and Notifications															
			1.2	Lead-Based Paint (LBP) Inventory															
			1.2	Lead-Based Paint (LBP) Management Plan															
			1.2	Emergency Contingency Plan															
			1.2	Hazardous Waste Management Plan															
			1.2	Waste Handling and Site Storage Plan															
			1.2	Waste Disposal Plan					X										
			1.2	Sampling Result		X			X										
			1.5	Quality Control			X	X											

SUBMITTAL REGISTER
(ER 415 1-10)

CONTRACT NO.

TITLE AND LOCATION
Arvin Cadet Physical Development Center, Phase 2/3

CONTRACTOR

SPECIFICATION SECTION
02120

ACTIVITY NO	TRANSMITTAL NO.	ITEM NO	SPECIFICATION PARAGRAPH NUMBER	DESCRIPTION OF ITEM SUBMITTED	TYPE OF SUBMITTAL										CLASSIFICATION		REVIEWER	CONTRACTOR SCHEDULE DATES			CONTRACTOR ACTION		GOVERNMENT ACTION		
															INFORMATIONAL	GOVERNMENT APPROVED		SUBMIT	APPROVAL NEEDED BY	MATERIAL NEEDED BY	CODE	DATE	SUBMIT TO GOVERNMENT	CODE	DATE	REMARKS
a.	b.	c.	d.	e.	f.	g.	h.	i.	j.	k.	l.	m.	n.	o.	p.	q.	r.	s.	t.	u.	v.	w.	x.	v.	z.	aa.
			1.2	On-site Hazardous Waste Management Plan																						
			1.2	Off-site Hazardous Waste Management Plan																						
			3.7	Record keeping					X						X											
			3.8	Spill Response					X						X											
			1.2	Exception Reports											X											
			1.3	Qualifications						X					X											
			1.2	Off-Site Policy Compliance Certification																						
			1.2	Certificates of Disposal																						
			3.2.3	Packagings Certification																						
			1.2	Hazardous Waste Classification and Manifests																						
			1.2	Notices of Non-Compliance and Notices of Violation																						

SUBMITTAL REGISTER
(ER 415 1-10)

CONTRACT NO.

TITLE AND LOCATION
Arvin Cadet Physical Development Center, Phase 2/3

CONTRACTOR

SPECIFICATION SECTION
02220

ACTIVITY NO a.	TRANSMITTAL NO. b.	ITEM NO c.	SPECIFICATION PARAGRAPH NUMBER d.	DESCRIPTION OF ITEM SUBMITTED e.	TYPE OF SUBMITTAL: INSERT	CLASSIFICATION: INFORMATION ONLY o.	CLASSIFICATION: GOVERNMENT APPROVED q.	REVIEWER r.	CONTRACTOR SCHEDULE DATES: SUBMIT s.	CONTRACTOR SCHEDULE DATES: APPROVAL NEEDED BY t.	CONTRACTOR SCHEDULE DATES: MATERIAL NEEDED BY u.	CONTRACTOR ACTION: CODE v.	CONTRACTOR ACTION: DATE w.	GOVERNMENT ACTION: SUBMIT TO GOVERNMENT x.	GOVERNMENT ACTION: CODE y.	GOVERNMENT ACTION: DATE z.	REMARKS aa.
			1.3	Work Plan			X										
			1.3	Written Compliance Plan													
			1.3	Certificates of severance of utility services; and Permits and notices authorizing building demolition													
			1.3	Certificate of Experience													

SUBMITTAL REGISTER
(ER 415 1-10)

CONTRACT NO.

TITLE AND LOCATION
Arvin Cadet Physical Development Center, Phase 2/3

CONTRACTOR

SPECIFICATION SECTION
02221

ACTIVITY NO a.	TRANSMITTAL NO. b.	ITEM NO c.	SPECIFICATION PARAGRAPH NUMBER d.	DESCRIPTION OF ITEM SUBMITTED e.	TYPE OF SUBMITTAL										CLASSIFICATION		CONTRACTOR SCHEDULE DATES			CONTRACTOR ACTION		GOVERNMENT ACTION			REMARKS aa.
																	SUBMIT s.	APPROVAL NEEDED BY t.	MATERIAL NEEDED BY u.	CODE v.	DATE w.	SUBMIT TO GOVERNMENT x.	CODE y.	DATE z.	
			1.3	Field Density Tests											X									
			1.3	Testing of Backfill Materials																				

SUBMITTAL REGISTER
(ER 415 1-10)

CONTRACT NO.

TITLE AND LOCATION: **Arvin Cadet Physical Development Center, Phase 2/3**

CONTRACTOR

SPECIFICATION SECTION: **02222**

ACTIVITY NO. a.	TRANS-MITTAL NO. b.	ITEM NO. c.	SPECIFICATION PARAGRAPH NUMBER d.	DESCRIPTION OF ITEM SUBMITTED e.	TYPE OF SUBMITTAL: INS	STA	CERTI	CLASSIFICATION: INFORMATION	GO APPROVED	REVIEWER r.	CONTRACTOR SCHEDULE DATES: SUBMIT s.	APPROVAL NEEDED BY t.	MATERIAL NEEDED BY u.	CONTRACTOR ACTION: CODE v.	DATE w.	SUBMIT TO GOVERNMENT x.	GOVERNMENT ACTION: CODE y.	DATE z.	REMARKS aa.
			1.3	Blasting Plan			X		X										
			1.3	Certificate of Blaster's Experience															

SUBMITTAL REGISTER
(ER 415 1-10)

CONTRACT NO.

TITLE AND LOCATION: **Arvin Cadet Physical Development Center, Phase 2/3**

CONTRACTOR

SPECIFICATION SECTION: **02223**

ACTIVITY NO. a.	TRANS-MITTAL NO. b.	ITEM NO. c.	SPECIFICATION PARAGRAPH NUMBER d.	DESCRIPTION OF ITEM SUBMITTED e.	TYPE OF SUBMITTAL: INS	STA	CERTI	CLASSIFICATION: INFORMATION	GO APPROVED	REVIEWER r.	CONTRACTOR SCHEDULE DATES: SUBMIT s.	APPROVAL NEEDED BY t.	MATERIAL NEEDED BY u.	CONTRACTOR ACTION: CODE v.	DATE w.	SUBMIT TO GOVERNMENT x.	GOVERNMENT ACTION: CODE y.	DATE z.	REMARKS aa.
			1.2	Detailed Shop Drawings															
			1.2	Strand Tendon			X		X										
			1.2	Stressing Head Assembly															
			1.2	Testing and Inspection for Contractor Quality Control															
			1.2	Rock Bolts			X		X										
			1.2	Jack and Pressure Gauge Calibration															
			1.2	Qualifications			X		X										

SUBMITTAL REGISTER
(ER 415 1-10)

CONTRACT NO.

TITLE AND LOCATION
Arvin Cadet Physical Development Center, Phase 2/3

CONTRACTOR

SPECIFICATION SECTION
02230

ACTIVITY NO a.	TRANSMITTAL NO. b.	ITEM NO c.	SPECIFICATION PARAGRAPH NUMBER d.	DESCRIPTION OF ITEM SUBMITTED e.	TYPE OF SUBMITTAL										CLASSIFICATION (IF REQUIRED) p.	GOVT APPROVED q.	REVIEWER r.	CONTRACTOR SCHEDULE DATES			CONTRACTOR ACTION		GOVERNMENT ACTION		REMARKS aa.
																		SUBMIT s.	APPROVAL NEEDED BY t.	MATERIAL NEEDED BY u.	CODE v.	DATE w.	SUBMIT TO GOVERNMENT x.	CODE y.	DATE z.	
			1.2	Written Permission											X										

SUBMITTAL REGISTER
(ER 415 1-10)

CONTRACT NO.

TITLE AND LOCATION: **Arvin Cadet Physical Development Center, Phase 2/3**

CONTRACTOR

SPECIFICATION SECTION: **02316**

ACTIVITY NO. a.	TRANS-MITTAL NO. b.	ITEM NO. c.	SPECIFICATION PARAGRAPH NUMBER d.	DESCRIPTION OF ITEM SUBMITTED e.	TYPE OF SUBMITTAL: INS	STA	CERTI	CLASSIFICATION: INFORMATION ONLY p.	GO APPROVED q.	REVIEWER r.	CONTRACTOR SCHEDULE DATES: SUBMIT s.	APPROVAL NEEDED BY t.	MATERIAL NEEDED BY u.	CONTRACTOR ACTION: CODE v.	DATE w.	SUBMIT TO GOVERNMENT x.	GOVERNMENT ACTION: CODE y.	DATE z.	REMARKS aa.
			3.4.2	Field Density Tests				X											
			3.4.1	Testing of Backfill Materials															

SUBMITTAL REGISTER
(ER 415 1-10)

CONTRACT NO.

TITLE AND LOCATION
Arvin Cadet Physical Development Center, Phase 2/3

CONTRACTOR

SPECIFICATION SECTION
02466

ACTIVITY NO a.	TRANSMITTAL NO. b.	ITEM NO c.	SPECIFICATION PARAGRAPH NUMBER d.	DESCRIPTION OF ITEM SUBMITTED e.	TYPE OF SUBMITTAL: INSTA	CERTI	CLASSIFICATION: INFORMA	APPROVED g.	REVIEWER r.	CONTRACTOR SCHEDULE DATES: SUBMIT s.	APPROVAL NEEDED BY t.	MATERIAL NEEDED BY u.	CONTRACTOR ACTION: CODE v.	DATE w.	SUBMIT TO GOVERNMENT x.	GOVERNMENT ACTION: CODE y.	DATE z.	REMARKS aa.
			1.4	Drilled Foundation Caissons														
			1.5	Qualifications	X		X											
			1.4	Protection		X		X										
			1.4	Drilled Foundation Caissons														

SUBMITTAL REGISTER
(ER 415 1-10)

CONTRACT NO.

TITLE AND LOCATION: **Arvin Cadet Physical Development Center, Phase 2/3**

CONTRACTOR

SPECIFICATION SECTION: **02511**

ACTIVITY NO. a.	TRANS-MITTAL NO. b.	ITEM NO. c.	SPECIFICATION PARAGRAPH NUMBER d.	DESCRIPTION OF ITEM SUBMITTED e.	TYPE OF SUBMITTAL									CLASSIFICATION			CONTRACTOR SCHEDULE DATES			CONTRACTOR ACTION			GOVERNMENT ACTION		REMARKS aa.
						INS	STA	CERTI						INFORMATION	GO APPROVED	REVIEWER r.	SUBMIT s.	APPROVAL NEEDED BY t.	MATERIAL NEEDED BY u.	CODE v.	DATE w.	SUBMIT TO GOVERNMENT x.	CODE y.	DATE z.	
			2.1	Granite Curb	X										X										
			2.2	Concrete					X						X										

SUBMITTAL REGISTER
(ER 415 1-10)

CONTRACT NO.

TITLE AND LOCATION
Arvin Cadet Physical Development Center, Phase 2/3

CONTRACTOR

SPECIFICATION SECTION
02531

ACTIVITY NO a.	TRANSMITTAL NO. b.	ITEM NO c.	SPECIFICATION PARAGRAPH NUMBER d.	DESCRIPTION OF ITEM SUBMITTED e.	TYPE OF SUBMITTAL										CLASSIFICATION		REVIEWER r.	CONTRACTOR SCHEDULE DATES			CONTRACTOR ACTION		GOVERNMENT ACTION			REMARKS aa.
																		SUBMIT s.	APPROVAL NEEDED BY t.	MATERIAL NEEDED BY u.	CODE v.	DATE w.	SUBMIT TO GOVERNMENT x.	CODE y.	DATE z.	
			1.4	Portland Cement						X					X											
			2.3	Joints						X																

SUBMITTAL REGISTER
(ER 415 1-10)

CONTRACT NO.

TITLE AND LOCATION: **Arvin Cadet Physical Development Center, Phase 2/3**

CONTRACTOR

SPECIFICATION SECTION: **02551**

ACTIVITY NO. a.	TRANS-MITTAL NO. b.	ITEM NO. c.	SPECIFICATION PARAGRAPH NUMBER d.	DESCRIPTION OF ITEM SUBMITTED e.	TYPE OF SUBMITTAL: INS	STA	CERTI	CLASSIFICATION: INFORMATION	GO APPROVED	REVIEWER r.	CONTRACTOR SCHEDULE DATES: SUBMIT s.	APPROVAL NEEDED BY t.	MATERIAL NEEDED BY u.	CONTRACTOR ACTION: CODE v.	DATE w.	SUBMIT TO GOVERNMENT x.	GOVERNMENT ACTION: CODE y.	DATE z.	REMARKS aa.
			1.2	Bituminous Pavement				X											
			1.2	Job Mix Formula		X		X											
			1.2	Testing Laboratory				X											
			1.2	Prime Coat			X	X											
			1.2	Tack Coat			X	X											
			1.2	Asphaltic Cement			X	X											
			1.2	Mineral Filler			X	X											
			1.2	Aggregate			X	X											
			1.2	Sand			X	X											

SUBMITTAL REGISTER
(ER 415 1-10)

CONTRACT NO.

TITLE AND LOCATION: **Arvin Cadet Physical Development Center, Phase 2/3**

CONTRACTOR

SPECIFICATION SECTION: **02580**

ACTIVITY NO. a.	TRANS-MITTAL NO. b.	ITEM NO. c.	SPECIFICATION PARAGRAPH NUMBER d.	DESCRIPTION OF ITEM SUBMITTED e.	TYPE OF SUBMITTAL: INS	STA	CERTI	CLASSIFICATION: INFORMATION	GO APPROVED g.	REVIEWER r.	CONTRACTOR SCHEDULE DATES: SUBMIT s.	APPROVAL NEEDED BY t.	MATERIAL NEEDED BY u.	CONTRACTOR ACTION: CODE v.	DATE w.	SUBMIT TO GOVERNMENT x.	GOVERNMENT ACTION: CODE y.	DATE z.	REMARKS aa.
			1.2	Equipment Lists					X										
			1.2	Composition Requirements															
			1.2	Mixing, Thinning and Application															
			1.2	Material Tests			X	X											
			1.2	Volatile Organic Compound (VOC)															
				Content															

SUBMITTAL REGISTER
(ER 415 1-10)

CONTRACT NO.

TITLE AND LOCATION
Arvin Cadet Physical Development Center, Phase 2/3

CONTRACTOR

SPECIFICATION SECTION
02621

ACTIVITY NO a.	TRANSMITTAL NO. b.	ITEM NO c.	SPECIFICATION PARAGRAPH NUMBER d.	DESCRIPTION OF ITEM SUBMITTED e.	TYPE OF SUBMITTAL												CLASSIFICATION		REVIEWER r.	CONTRACTOR SCHEDULE DATES			CONTRACTOR ACTION		GOVERNMENT ACTION			REMARKS aa.
																				SUBMIT s.	APPROVAL NEEDED BY t.	MATERIAL NEEDED BY u.	CODE v.	DATE w.	SUBMIT TO GOVERNMENT x.	CODE y.	DATE z.	
			2.1	Materials									X				X										
			2.1	Materials										X				X									

SUBMITTAL REGISTER
(ER 415 1-10)

CONTRACT NO.

TITLE AND LOCATION: **Arvin Cadet Physical Development Center, Phase 2/3**

CONTRACTOR

SPECIFICATION SECTION: **02720**

ACTIVITY NO. a.	TRANS-MITTAL NO. b.	ITEM NO. c.	SPECIFICATION PARAGRAPH NUMBER d.	DESCRIPTION OF ITEM SUBMITTED e.	TYPE OF SUBMITTAL: INS	STA	CERTI	CLASSIFICATION: INFORMATION	GO APPROVED	REVIEWER r.	CONTRACTOR SCHEDULE DATES: SUBMIT s.	APPROVAL NEEDED BY t.	MATERIAL NEEDED BY u.	CONTRACTOR ACTION: CODE v.	DATE w.	SUBMIT TO GOVERNMENT x.	GOVERNMENT ACTION: CODE y.	DATE z.	REMARKS aa.
			3.3	Placing Pipe	X			X											
			1.3	Resin Certification				X											
			3.7.4	Determination of Density															
			2.2.6	Frame and Cover for Gratings															

SUBMITTAL REGISTER
(ER 415 1-10)

CONTRACT NO.

TITLE AND LOCATION: **Arvin Cadet Physical Development Center, Phase 2/3**

CONTRACTOR

SPECIFICATION SECTION: **02821**

ACTIVITY NO. a.	TRANS-MITTAL NO. b.	ITEM NO. c.	SPECIFICATION PARAGRAPH NUMBER d.	DESCRIPTION OF ITEM SUBMITTED e.	TYPE OF SUBMITTAL: INS	STA	CERTI	CLASSIFICATION: INFORMATION	GO APPROVED	REVIEWER r.	CONTRACTOR SCHEDULE DATES: SUBMIT s.	APPROVAL NEEDED BY t.	MATERIAL NEEDED BY u.	CONTRACTOR ACTION: CODE v.	DATE w.	SUBMIT TO GOVERNMENT x.	GOVERNMENT ACTION: CODE y.	DATE z.	REMARKS aa.
			1.2	Chain Link Fence			X		X										

SUBMITTAL REGISTER
(ER 415 1-10)

CONTRACT NO.

TITLE AND LOCATION: **Arvin Cadet Physical Development Center, Phase 2/3**

CONTRACTOR

SPECIFICATION SECTION: **02950**

ACTIVITY NO. a.	TRANS-MITTAL NO. b.	ITEM NO. c.	SPECIFICATION PARAGRAPH NUMBER d.	DESCRIPTION OF ITEM SUBMITTED e.	TYPE OF SUBMITTAL: INS	STA	CERTI	CLASSIFICATION: INFORMATION	GO APPROVED	REVIEWER r.	CONTRACTOR SCHEDULE DATES: SUBMIT s.	APPROVAL NEEDED BY t.	MATERIAL NEEDED BY u.	CONTRACTOR ACTION: CODE v.	DATE w.	SUBMIT TO GOVERNMENT x.	GOVERNMENT ACTION: CODE y.	DATE z.	REMARKS aa.
			1.1	Manufacturer's Product Data															
			1.1	Test Reports			X		X										
			1.1	Certificates			X		X										

SUBMITTAL REGISTER
(ER 415 1-10)

CONTRACT NO.

TITLE AND LOCATION: **Arvin Cadet Physical Development Center, Phase 2/3**

CONTRACTOR

SPECIFICATION SECTION: **03100**

ACTIVITY NO. a.	TRANS-MITTAL NO. b.	ITEM NO. c.	SPECIFICATION PARAGRAPH NUMBER d.	DESCRIPTION OF ITEM SUBMITTED e.	TYPE OF SUBMITTAL	CLASSIFICATION INFORMATIONAL p.	CLASSIFICATION GOVERNMENT APPROVED q.	REVIEWER r.	CONTRACTOR SCHEDULE DATES SUBMIT s.	CONTRACTOR SCHEDULE DATES APPROVAL NEEDED BY t.	CONTRACTOR SCHEDULE DATES MATERIAL NEEDED BY u.	CONTRACTOR ACTION CODE v.	CONTRACTOR ACTION DATE w.	CONTRACTOR ACTION SUBMIT TO GOVERNMENT x.	GOVERNMENT ACTION CODE y.	GOVERNMENT ACTION DATE z.	REMARKS aa.
			1.3	Design	X	X											
			2.1	Form Materials		X											
			1.2	Concrete Formwork		X											
			2.1.5	Form Releasing Agents			X										

SUBMITTAL REGISTER
(ER 415 1-10)

CONTRACT NO.

TITLE AND LOCATION: **Arvin Cadet Physical Development Center, Phase 2/3**

CONTRACTOR

SPECIFICATION SECTION: **03150**

ACTIVITY NO. a.	TRANS-MITTAL NO. b.	ITEM NO. c.	SPECIFICATION PARAGRAPH NUMBER d.	DESCRIPTION OF ITEM SUBMITTED e.	TYPE OF SUBMITTAL									CLASSIFICATION			CONTRACTOR SCHEDULE DATES			CONTRACTOR ACTION			GOVERNMENT ACTION		REMARKS aa.
							INS		STA		CERTI			INFORMATION	GO APPROVED	REVIEWER r.	SUBMIT s.	APPROVAL NEEDED BY t.	MATERIAL NEEDED BY u.	CODE v.	DATE w.	SUBMIT TO GOVERNMENT x.	CODE y.	DATE z.	
			2.2	Preformed Expansion Joint Filler																					
			2.3	Sealant	X										X										
			2.4	Waterstops	X										X										
			2.4	Waterstops		X									X										
			2.2	Preformed Expansion Joint Filler																					
			2.3	Sealant			X							X											
			2.4	Waterstops			X							X											
			2.2	Preformed Expansion Joint Filler																					
			2.3	Sealant							X				X										
			2.4	Waterstops							X				X										
			1.2	Preformed Compression Seals and Lubricants																					
			2.3.4	Field-Molded Type								X			X										
			2.4.1	Non-metallic Materials																					

SUBMITTAL REGISTER
(ER 415 1-10)

CONTRACT NO.

TITLE AND LOCATION: **Arvin Cadet Physical Development Center, Phase 2/3**

CONTRACTOR

SPECIFICATION SECTION: **03200**

ACTIVITY NO. a.	TRANS-MITTAL NO. b.	ITEM NO. c.	SPECIFICATION PARAGRAPH NUMBER d.	DESCRIPTION OF ITEM SUBMITTED e.	TYPE OF SUBMITTAL: INS	STA	CERTI	CLASSIFICATION: INFORMATION	GO APPROVED	REVIEWER r.	CONTRACTOR SCHEDULE DATES: SUBMIT s.	APPROVAL NEEDED BY t.	MATERIAL NEEDED BY u.	CONTRACTOR ACTION: CODE v.	DATE w.	SUBMIT TO GOVERNMENT x.	GOVERNMENT ACTION: CODE y.	DATE z.	REMARKS aa.
			1.2	Concrete Reinforcement System															
			1.3	Welding		X		X											
			2.3	Reinforcing Steel				X											

SUBMITTAL REGISTER
(ER 415 1-10)

CONTRACT NO.

TITLE AND LOCATION: **Arvin Cadet Physical Development Center, Phase 2/3**

CONTRACTOR

SPECIFICATION SECTION: **03300**

ACTIVITY NO. a.	TRANS-MITTAL NO. b.	ITEM NO. c.	SPECIFICATION PARAGRAPH NUMBER d.	DESCRIPTION OF ITEM SUBMITTED e.	TYPE OF SUBMITTAL: INS	STA	CERTI	CLASSIFICATION: INFORMATION	GO APPROVED g.	REVIEWER r.	CONTRACTOR SCHEDULE DATES: SUBMIT s.	APPROVAL NEEDED BY t.	MATERIAL NEEDED BY u.	CONTRACTOR ACTION: CODE v.	DATE w.	SUBMIT TO GOVERNMENT x.	GOVERNMENT ACTION: CODE y.	DATE z.	REMARKS aa.
			1.7	Mixture Proportions					X										
			3.3	Lightweight Aggregate Concrete															
			3.16	Testing and Inspection for Contractor Quality Control															
			1.3	Qualifications			X		X										
			2.3.4	Surface Retarder			X	X											

SUBMITTAL REGISTER
(ER 415 1-10)

CONTRACT NO.

TITLE AND LOCATION: **Arvin Cadet Physical Development Center, Phase 2/3**

CONTRACTOR

SPECIFICATION SECTION: **03366**

ACTIVITY NO. a.	TRANS-MITTAL NO. b.	ITEM NO. c.	SPECIFICATION PARAGRAPH NUMBER d.	DESCRIPTION OF ITEM SUBMITTED e.	TYPE OF SUBMITTAL									CLASSIFICATION			CONTRACTOR SCHEDULE DATES			CONTRACTOR ACTION			GOVERNMENT ACTION		
						INS	STA	CERTI						INFORMATION	GO APPROVED	REVIEWER r.	SUBMIT s.	APPROVAL NEEDED BY t.	MATERIAL NEEDED BY u.	CODE v.	DATE w.	SUBMIT TO GOVERNMENT x.	CODE y.	DATE z.	REMARKS aa.
			1.1	Chemical Stain										X											
			1.1	Chemical Stain						X				X											
			1.1	Chemical Stain							X				X										

SUBMITTAL REGISTER
(ER 415 1-10)

CONTRACT NO.

TITLE AND LOCATION: **Arvin Cadet Physical Development Center, Phase 2/3**

CONTRACTOR

SPECIFICATION SECTION: **04200**

ACTIVITY NO. a.	TRANS-MITTAL NO. b.	ITEM NO. c.	SPECIFICATION PARAGRAPH NUMBER d.	DESCRIPTION OF ITEM SUBMITTED e.	TYPE OF SUBMITTAL										CLASSIFICATION			CONTRACTOR SCHEDULE DATES			CONTRACTOR ACTION			GOVERNMENT ACTION		
						INS		STA		CERTI					INFORMATION	GO APPROVED	REVIEWER r.	SUBMIT s.	APPROVAL NEEDED BY t.	MATERIAL NEEDED BY u.	CODE v.	DATE w.	SUBMIT TO GOVERNMENT x.	CODE y.	DATE z.	REMARKS aa.
			2.2	Clay or Shale Brick												X										
			1.2	Concrete Brick																						
			1.2	Concrete Masonry Units																						
			1.2	Ground Faced Concrete Masonry Units																						
			1.2	Prefaced Concrete Masonry Units																						
			2.13	Insulation	X											X										
			1.2	Cast Stone	X											X										
			1.2	Qualifications												X										
			1.2	Masonry Work		X										X										
			1.2	Cast Stone Work												X										
			3.1.2	Cold Weather Installation																						
			1.2	Mortar Mix Proportions																						
			1.2	Grout Mix Proportions												X										
			3.21.3	Efflorescence Test												X										
			3.21.1	Field Testing of Mortar																						
			3.21.2	Field Testing of Grout																						
			3.21.4	Prism tests						X						X										
			1.2	Masonry Cement						X						X										
			2.3.3	Fire-rated CMU						X						X										
			1.5	Special Inspection												X										
			1.2	Cast Stone Test Reports																						
			2.2	Clay or Shale Brick																						
			1.2	Fl0							X															
			2.3	Concrete Masonry Units (CMU)																						
			1.2	Ground Faced Concrete Masonry Units																						
			1.2	Prefaced Concrete Masonry Units																						
			2.11	Control Joint Keys											X											

SUBMITTAL REGISTER
(ER 415 1-10)

CONTRACT NO.

TITLE AND LOCATION: **Arvin Cadet Physical Development Center, Phase 2/3**

CONTRACTOR

SPECIFICATION SECTION: **04200**

ACTIVITY NO. a.	TRANS-MITTAL NO. b.	ITEM NO. c.	SPECIFICATION PARAGRAPH NUMBER d.	DESCRIPTION OF ITEM SUBMITTED e.	TYPE OF SUBMITTAL: INS	STA	CERTI	CLASSIFICATION: INFORMATION	GO APPROVED	REVIEWER r.	CONTRACTOR SCHEDULE DATES: SUBMIT s.	APPROVAL NEEDED BY t.	MATERIAL NEEDED BY u.	CONTRACTOR ACTION: CODE v.	DATE w.	SUBMIT TO GOVERNMENT x.	GOVERNMENT ACTION: CODE y.	DATE z.	REMARKS aa.
			2.8	Anchors, Ties, and Bar Positioners															
			2.12	Expansion-Joint Materials															
			2.9	Joint Reinforcement				X											
			2.10	Reinforcing Steel Bars and Rods															
			1.2	Masonry Cement			X	X											
			1.2	Mortar Coloring			X	X											
			2.13	Insulation			X	X											
			2.5	Cast Stone Items			X	X											
			1.2	Mortar Admixtures					X										
			1.2	Grout Admixtures			X		X										
			2.3	Concrete Masonry Units (CMU)															
			1.2	Ground Faced Concrete Masonry Units															
			1.2	Prefaced Concrete Masonry Units															
			1.2	Concrete Brick			X		X										
			1.2	Stone Items			X		X										
			2.2	Clay or Shale Brick					X										
			2.8	Anchors, Ties, and Bar Positioners															
			1.2	Expansion-Joint Material															
			2.9	Joint Reinforcement					X										
			1.2	Cast Stone Samples					X										
			2.13	Insulation			X		X										
			1.2	Portable Panel			X		X										

SUBMITTAL REGISTER
(ER 415 1-10)

CONTRACT NO.

TITLE AND LOCATION: **Arvin Cadet Physical Development Center, Phase 2/3**

CONTRACTOR

SPECIFICATION SECTION: **04900**

ACTIVITY NO. a.	TRANS-MITTAL NO. b.	ITEM NO. c.	SPECIFICATION PARAGRAPH NUMBER d.	DESCRIPTION OF ITEM SUBMITTED e.	TYPE OF SUBMITTAL: INS	STA	CERTI	CLASSIFICATION: INFORMATION	GO APPROVED	REVIEWER r.	CONTRACTOR SCHEDULE DATES: SUBMIT s.	APPROVAL NEEDED BY t.	MATERIAL NEEDED BY u.	CONTRACTOR ACTION: CODE v.	DATE w.	SUBMIT TO GOVERNMENT x.	GOVERNMENT ACTION: CODE y.	DATE z.	REMARKS aa.
			1.2.1	Cleaning and Restoration Methods															
			1.4	Qualifications				X											
			2.1	Materials			X	X											

SUBMITTAL REGISTER
(ER 415 1-10)

CONTRACT NO.

TITLE AND LOCATION
Arvin Cadet Physical Development Center, Phase 2/3

CONTRACTOR

SPECIFICATION SECTION
05090

ACTIVITY NO a.	TRANSMITTAL NO. b.	ITEM NO c.	SPECIFICATION PARAGRAPH NUMBER d.	DESCRIPTION OF ITEM SUBMITTED e.	TYPE OF SUBMITTAL: INSTALL f.	SAMPLE g.	CERT h.	O&M i.	CLASSIFICATION: INFORM j.	CLASSIFICATION: APPROVED k.	REVIEWER r.	CONTRACTOR SCHEDULE DATES: SUBMIT s.	CONTRACTOR SCHEDULE DATES: APPROVAL NEEDED BY t.	CONTRACTOR SCHEDULE DATES: MATERIAL NEEDED BY u.	CONTRACTOR ACTION: CODE v.	CONTRACTOR ACTION: DATE w.	GOVERNMENT ACTION: SUBMIT TO GOVERNMENT x.	GOVERNMENT ACTION: CODE y.	GOVERNMENT ACTION: DATE z.	REMARKS aa.
			1.5	Welding Procedure Qualifications																
			1.6	Welder, Welding Operator, and Tacker Qualification																
			1.7	Inspector Qualification																
			3.2	Quality Control				X		X										

SUBMITTAL REGISTER
(ER 415 1-10)

CONTRACT NO.

TITLE AND LOCATION: **Arvin Cadet Physical Development Center, Phase 2/3**

CONTRACTOR

SPECIFICATION SECTION: **05093**

ACTIVITY NO. a.	TRANS-MITTAL NO. b.	ITEM NO. c.	SPECIFICATION PARAGRAPH NUMBER d.	DESCRIPTION OF ITEM SUBMITTED e.	TYPE OF SUBMITTAL	CLASSIFICATION INFORMATIONAL p.	CLASSIFICATION GOVERNMENT APPROVED q.	REVIEWER r.	CONTRACTOR SCHEDULE DATES SUBMIT s.	CONTRACTOR SCHEDULE DATES APPROVAL NEEDED BY t.	CONTRACTOR SCHEDULE DATES MATERIAL NEEDED BY u.	CONTRACTOR ACTION CODE v.	CONTRACTOR ACTION DATE w.	CONTRACTOR ACTION SUBMIT TO GOVERNMENT x.	GOVERNMENT ACTION CODE y.	GOVERNMENT ACTION DATE z.	REMARKS aa.
			1.6	Qualifications		X											
			1.6	Qualifications	X		X										
			3.1	Welding Operations		X											

SUBMITTAL REGISTER
(ER 415 1-10)

CONTRACT NO.

TITLE AND LOCATION: **Arvin Cadet Physical Development Center, Phase 2/3**

CONTRACTOR

SPECIFICATION SECTION: **05120**

ACTIVITY NO. a.	TRANS-MITTAL NO. b.	ITEM NO. c.	SPECIFICATION PARAGRAPH NUMBER d.	DESCRIPTION OF ITEM SUBMITTED e.	TYPE OF SUBMITTAL: INS	STA	CERTI	CLASSIFICATION: INFORMATION	GO APPROVED g.	REVIEWER r.	CONTRACTOR SCHEDULE DATES: SUBMIT s.	APPROVAL NEEDED BY t.	MATERIAL NEEDED BY u.	CONTRACTOR ACTION: CODE v.	DATE w.	SUBMIT TO GOVERNMENT x.	GOVERNMENT ACTION: CODE y.	DATE z.	REMARKS aa.
			1.3	Standard Details					X										
			1.3	Connection Design Calculations															
			1.3	Joint welding Procedures															
			1.3	Structural Steel System															
			1.3	Bolt Installation					X										
			1.3	Quality Control Manual															
			3.4	Erection		X			X										
			1.3	Mill Test Reports															
			1.3	Welder Qualifications															
			3.3	Fabrication			X												
			1.3	Painting Certification															
			1.3	Galvanizing Certification															
			1.3	Affidavits			X	X											
			2.4	High Strength Bolts and Nuts															
			2.5	Carbon Steel Bolts and Nuts															
			2.6	Nuts Dimensional Style															
			2.7	Washers			X												

SUBMITTAL REGISTER
(ER 415 1-10)

CONTRACT NO.

TITLE AND LOCATION: **Arvin Cadet Physical Development Center, Phase 2/3**

CONTRACTOR

SPECIFICATION SECTION: **05300**

ACTIVITY NO. a.	TRANS-MITTAL NO. b.	ITEM NO. c.	SPECIFICATION PARAGRAPH NUMBER d.	DESCRIPTION OF ITEM SUBMITTED e.	TYPE OF SUBMITTAL: INS	STA	CERTI	CLASSIFICATION: INFORMATION	GO APPROVED	REVIEWER r.	CONTRACTOR SCHEDULE DATES: SUBMIT s.	APPROVAL NEEDED BY t.	MATERIAL NEEDED BY u.	CONTRACTOR ACTION: CODE v.	DATE w.	SUBMIT TO GOVERNMENT x.	GOVERNMENT ACTION: CODE y.	DATE z.	REMARKS aa.
			2.1	Deck Units	X				X										
			2.1	Deck Units		X			X										
			2.5	Accessories		X			X										
			1.2	Attachments and Headed Studs															
			3.5	Holes and Openings					X										
			2.1	Deck Units			X	X											
			3.3	Attachments			X	X											
			1.2	Headed Studs			X	X											
			2.1	Deck Units					X										
			2.5	Accessories				X											
			1.2	Headed Studs				X											
			3.3	Attachments				X											
			1.2	Headed Studs				X											

SUBMITTAL REGISTER
(ER 415 1-10)

CONTRACT NO.

TITLE AND LOCATION: **Arvin Cadet Physical Development Center, Phase 2/3**

CONTRACTOR

SPECIFICATION SECTION: **05400**

ACTIVITY NO. a.	TRANS-MITTAL NO. b.	ITEM NO. c.	SPECIFICATION PARAGRAPH NUMBER d.	DESCRIPTION OF ITEM SUBMITTED e.	TYPE OF SUBMITTAL: INS	STA	CERTI	CLASSIFICATION: INFORMATION	GO APPROVED	REVIEWER r.	CONTRACTOR SCHEDULE DATES: SUBMIT s.	APPROVAL NEEDED BY t.	MATERIAL NEEDED BY u.	CONTRACTOR ACTION: CODE v.	DATE w.	SUBMIT TO GOVERNMENT x.	GOVERNMENT ACTION: CODE y.	DATE z.	REMARKS aa.
			1.2	Product Data	X			X											
			1.2	Shop Drawings and Design Computations															
			1.2	Light Gage Steel Framing Components															

SUBMITTAL REGISTER
(ER 415 1-10)

CONTRACT NO.

TITLE AND LOCATION: **Arvin Cadet Physical Development Center, Phase 2/3**

CONTRACTOR

SPECIFICATION SECTION: **05500**

ACTIVITY NO. a.	TRANS-MITTAL NO. b.	ITEM NO. c.	SPECIFICATION PARAGRAPH NUMBER d.	DESCRIPTION OF ITEM SUBMITTED e.	TYPE OF SUBMITTAL: INS	STA	CERTI	CLASSIFICATION: INFORMATION	GO APPROVED	REVIEWER r.	CONTRACTOR SCHEDULE DATES: SUBMIT s.	APPROVAL NEEDED BY t.	MATERIAL NEEDED BY u.	CONTRACTOR ACTION: CODE v.	DATE w.	SUBMIT TO GOVERNMENT x.	GOVERNMENT ACTION: CODE y.	DATE z.	REMARKS aa.
			1.2	Miscellaneous Metal Items															
			1.2	Structural Calculations															
			1.2	Welders Certification															
			1.2	Color Samples			X		X										

SUBMITTAL REGISTER
(ER 415 1-10)

CONTRACT NO.

TITLE AND LOCATION
Arvin Cadet Physical Development Center, Phase 2/3

CONTRACTOR

SPECIFICATION SECTION
05550

ACTIVITY NO a.	TRANSMITTAL NO. b.	ITEM NO c.	SPECIFICATION PARAGRAPH NUMBER d.	DESCRIPTION OF ITEM SUBMITTED e.	TYPE OF SUBMITTAL										CLASSIFICATION (IF APPROVED) p.	GOVT APPROVED q.	REVIEWER r.	CONTRACTOR SCHEDULE DATES			CONTRACTOR ACTION		GOVERNMENT ACTION		
					INSTR	STAT	CERT											SUBMIT s.	APPROVAL NEEDED BY t.	MATERIAL NEEDED BY u.	CODE v.	DATE w.	SUBMIT TO GOVERNMENT x.	CODE y.	DATE z.	REMARKS aa.
			1.2	Product Data	X											X									
			1.2	Shop Drawings												X									

SUBMITTAL REGISTER
(ER 415 1-10)

CONTRACT NO.

TITLE AND LOCATION: **Arvin Cadet Physical Development Center, Phase 2/3**

CONTRACTOR

SPECIFICATION SECTION: **05800**

ACTIVITY NO. a.	TRANS-MITTAL NO. b.	ITEM NO. c.	SPECIFICATION PARAGRAPH NUMBER d.	DESCRIPTION OF ITEM SUBMITTED e.	TYPE OF SUBMITTAL: INS	STA	CERTI	CLASSIFICATION: INFORMATION	GO APPROVED g.	REVIEWER r.	CONTRACTOR SCHEDULE DATES: SUBMIT s.	APPROVAL NEEDED BY t.	MATERIAL NEEDED BY u.	CONTRACTOR ACTION: CODE v.	DATE w.	SUBMIT TO GOVERNMENT x.	GOVERNMENT ACTION: CODE y.	DATE z.	REMARKS aa.
			1.2	Expansion Joints					X										
			1.2	Expansion Joint Shop Drawings															
			1.2	Material Test Reports															
			1.2	Metal Finish Samples					X										

SUBMITTAL REGISTER
(ER 415 1-10)

CONTRACT NO.

TITLE AND LOCATION: **Arvin Cadet Physical Development Center, Phase 2/3**

CONTRACTOR

SPECIFICATION SECTION: **06100**

ACTIVITY NO. a.	TRANS-MITTAL NO. b.	ITEM NO. c.	SPECIFICATION PARAGRAPH NUMBER d.	DESCRIPTION OF ITEM SUBMITTED e.	TYPE OF SUBMITTAL: INS	STA	CERTI	CLASSIFICATION: INFORMATION ONLY p.	GO APPROVED q.	REVIEWER r.	CONTRACTOR SCHEDULE DATES: SUBMIT s.	APPROVAL NEEDED BY t.	MATERIAL NEEDED BY u.	CONTRACTOR ACTION: CODE v.	DATE w.	SUBMIT TO GOVERNMENT x.	GOVERNMENT ACTION: CODE y.	DATE z.	REMARKS aa.
			2.1.1	Grading and Marking				X											

SUBMITTAL REGISTER
(ER 415 1-10)

CONTRACT NO.

TITLE AND LOCATION
Arvin Cadet Physical Development Center, Phase 2/3

CONTRACTOR

SPECIFICATION SECTION
06200

ACTIVITY NO a.	TRANSMITTAL NO. b.	ITEM NO c.	SPECIFICATION PARAGRAPH NUMBER d.	DESCRIPTION OF ITEM SUBMITTED e.	TYPE OF SUBMITTAL: INFO ONLY f.	TYPE OF SUBMITTAL: SAMPLE g.	TYPE OF SUBMITTAL: CERT h.	TYPE OF SUBMITTAL: O&M i.	CLASSIFICATION: INFORMATION CODE j.	CLASSIFICATION: GOVT APPROVED g.	REVIEWER r.	CONTRACTOR SCHEDULE DATES: SUBMIT s.	CONTRACTOR SCHEDULE DATES: APPROVAL NEEDED BY t.	CONTRACTOR SCHEDULE DATES: MATERIAL NEEDED BY u.	CONTRACTOR ACTION: CODE v.	CONTRACTOR ACTION: DATE w.	GOVERNMENT ACTION: SUBMIT TO GOVERNMENT x.	GOVERNMENT ACTION: CODE y.	GOVERNMENT ACTION: DATE z.	REMARKS aa.
			1.2	Wood Items, and Trim						X										
			1.2	Finish Carpentry						X										
			1.2	Moldings				X		X										

SUBMITTAL REGISTER
(ER 415 1-10)

CONTRACT NO.

TITLE AND LOCATION
Arvin Cadet Physical Development Center, Phase 2/3

CONTRACTOR

SPECIFICATION SECTION
06400

ACTIVITY NO a.	TRANSMITTAL NO. b.	ITEM NO c.	SPECIFICATION PARAGRAPH NUMBER d.	DESCRIPTION OF ITEM SUBMITTED e.	TYPE OF SUBMITTAL: INSTR f.	STAT g.	CERT h.	CO i.	MFR j.	SAMP k.	CLASSIFICATION: INFO l.	GOVT APPROVED m.	REVIEWER r.	CONTRACTOR SCHEDULE DATES: SUBMIT s.	APPROVAL NEEDED BY t.	MATERIAL NEEDED BY u.	CONTRACTOR ACTION: CODE v.	DATE w.	SUBMIT TO GOVERNMENT x.	GOVERNMENT ACTION: CODE y.	DATE z.	REMARKS aa.
			1.2	Plywood	X							X										
			1.2	High-Pressure Decorative Laminate																		
			1.2	Adhesive for Bonding Plastic																		
				Laminate																		
			1.2	Solid-Surfacing Material																		
			1.2	Fire-Retardant-Treated Materials																		
			1.2	Cabinet Hardware and Accessories																		
			1.2	Finishing Materials and Processes																		
			1.2	Qualification Data								X										
			1.2	Casework Shop Drawings																		
			1.2	Product Certificates																		
			1.2	Plywood					X				X									
			1.2	High-Pressure Decorative Laminate																		
			1.2	Solid-Surfacing Material																		
			1.2	Cabinet Hardware and Accessories																		
			1.2	Finishing Materials									X									

SUBMITTAL REGISTER
(ER 415 1-10)

CONTRACT NO.

TITLE AND LOCATION: **Arvin Cadet Physical Development Center, Phase 2/3**

CONTRACTOR

SPECIFICATION SECTION: **07110**

ACTIVITY NO. a.	TRANS-MITTAL NO. b.	ITEM NO. c.	SPECIFICATION PARAGRAPH NUMBER d.	DESCRIPTION OF ITEM SUBMITTED e.	TYPE OF SUBMITTAL: INS	STA	CERTI	CLASSIFICATION: INFORMATION	GO APPROVED	REVIEWER r.	CONTRACTOR SCHEDULE DATES: SUBMIT s.	APPROVAL NEEDED BY t.	MATERIAL NEEDED BY u.	CONTRACTOR ACTION: CODE v.	DATE w.	SUBMIT TO GOVERNMENT x.	GOVERNMENT ACTION: CODE y.	DATE z.	REMARKS aa.
			1.2	Materials			X		X										

SUBMITTAL REGISTER
(ER 415 1-10)

CONTRACT NO.

TITLE AND LOCATION: **Arvin Cadet Physical Development Center, Phase 2/3**

CONTRACTOR

SPECIFICATION SECTION: **07130**

ACTIVITY NO. a.	TRANS-MITTAL NO. b.	ITEM NO. c.	SPECIFICATION PARAGRAPH NUMBER d.	DESCRIPTION OF ITEM SUBMITTED e.	TYPE OF SUBMITTAL: INS	STA	CERTI	CLASSIFICATION: INFORMATION	GO APPROVED	REVIEWER r.	CONTRACTOR SCHEDULE DATES: SUBMIT s.	APPROVAL NEEDED BY t.	MATERIAL NEEDED BY u.	CONTRACTOR ACTION: CODE v.	DATE w.	SUBMIT TO GOVERNMENT x.	GOVERNMENT ACTION: CODE y.	DATE z.	REMARKS aa.
			1.3	Fluid Applied Waterproofing															
			1.3	Board Insulation					X										
			1.3	Precast Concrete Pavers															
			1.3	Fluid Applied Waterproofing System															
			1.3	Fluid Applied Waterproofing															
			1.3	Board Insulation			X		X										
			1.3	Precast Concrete Pavers															

SUBMITTAL REGISTER
(ER 415 1-10)

CONTRACT NO.

TITLE AND LOCATION: **Arvin Cadet Physical Development Center, Phase 2/3**

CONTRACTOR

SPECIFICATION SECTION: **07131**

ACTIVITY NO. a.	TRANS-MITTAL NO. b.	ITEM NO. c.	SPECIFICATION PARAGRAPH NUMBER d.	DESCRIPTION OF ITEM SUBMITTED e.	TYPE OF SUBMITTAL: INS	STA	CERTI	CLASSIFICATION: INFORMATION	GO APPROVED	REVIEWER r.	CONTRACTOR SCHEDULE DATES: SUBMIT s.	APPROVAL NEEDED BY t.	MATERIAL NEEDED BY u.	CONTRACTOR ACTION: CODE v.	DATE w.	SUBMIT TO GOVERNMENT x.	GOVERNMENT ACTION: CODE y.	DATE z.	REMARKS aa.
			1.3	Waterproofing System					X										
			1.3	Installation	X			X											
			2.1	Materials			X	X											

SUBMITTAL REGISTER
(ER 415 1-10)

CONTRACT NO.

TITLE AND LOCATION: **Arvin Cadet Physical Development Center, Phase 2/3**

CONTRACTOR

SPECIFICATION SECTION: **07140**

ACTIVITY NO. a.	TRANS-MITTAL NO. b.	ITEM NO. c.	SPECIFICATION PARAGRAPH NUMBER d.	DESCRIPTION OF ITEM SUBMITTED e.	TYPE OF SUBMITTAL: INS	STA	CERTI	CLASSIFICATION: INFORMATION	GO	APPROVED	REVIEWER r.	CONTRACTOR SCHEDULE DATES: SUBMIT s.	APPROVAL NEEDED BY t.	MATERIAL NEEDED BY u.	CONTRACTOR ACTION: CODE v.	DATE w.	SUBMIT TO GOVERNMENT x.	GOVERNMENT ACTION: CODE y.	DATE z.	REMARKS aa.
			1.2	Cementitious Waterproofing																
			1.2	Manufacturer's Review																

SUBMITTAL REGISTER
(ER 415 1-10)

CONTRACT NO.

TITLE AND LOCATION: **Arvin Cadet Physical Development Center, Phase 2/3**

CONTRACTOR

SPECIFICATION SECTION: **07141**

ACTIVITY NO. a.	TRANS-MITTAL NO. b.	ITEM NO. c.	SPECIFICATION PARAGRAPH NUMBER d.	DESCRIPTION OF ITEM SUBMITTED e.	TYPE OF SUBMITTAL: INS	STA	CERTI	CLASSIFICATION: INFORMATION	GO	APPROVED	REVIEWER r.	CONTRACTOR SCHEDULE DATES: SUBMIT s.	APPROVAL NEEDED BY t.	MATERIAL NEEDED BY u.	CONTRACTOR ACTION: CODE v.	DATE w.	SUBMIT TO GOVERNMENT x.	GOVERNMENT ACTION: CODE y.	DATE z.	REMARKS aa.
			1.2	Metal Oxide Waterproofing																
			1.2	Metal Oxide Waterproofing																
			1.2	Metal Oxide Waterproofing																

SUBMITTAL REGISTER
(ER 415 1-10)

CONTRACT NO.

TITLE AND LOCATION
Arvin Cadet Physical Development Center, Phase 2/3

CONTRACTOR

SPECIFICATION SECTION
07146

ACTIVITY NO a.	TRANSMITTAL NO. b.	ITEM NO c.	SPECIFICATION PARAGRAPH NUMBER d.	DESCRIPTION OF ITEM SUBMITTED e.	TYPE OF SUBMITTAL										CLASSIFICATION		CONTRACTOR SCHEDULE DATES			CONTRACTOR ACTION		GOVERNMENT ACTION			REMARKS aa.
															INFO ONLY o.	APPROVED q.	REVIEWER r.	SUBMIT s.	APPROVAL NEEDED BY t.	MATERIAL NEEDED BY u.	CODE v.	DATE w.	SUBMIT TO GOVERNMENT x.	CODE y.	DATE z.	
			1.2	Manufacturer's Literature																					
			1.2	Sample Finishes							X					X										

SUBMITTAL REGISTER
(ER 415 1-10)

CONTRACT NO.

TITLE AND LOCATION
Arvin Cadet Physical Development Center, Phase 2/3

CONTRACTOR

SPECIFICATION SECTION
07210

ACTIVITY NO a.	TRANSMITTAL NO. b.	ITEM NO c.	SPECIFICATION PARAGRAPH NUMBER d.	DESCRIPTION OF ITEM SUBMITTED e.	TYPE OF SUBMITTAL										CLASSIFICATION (IF APPROVED) p.	GOVT APPROVED q.	REVIEWER r.	CONTRACTOR SCHEDULE DATES			CONTRACTOR ACTION		GOVERNMENT ACTION		
					INSTR	STAT	CERT											SUBMIT s.	APPROVAL NEEDED BY t.	MATERIAL NEEDED BY u.	CODE v.	DATE w.	SUBMIT TO GOVERNMENT x.	CODE y.	DATE z.	REMARKS aa.
			1.2	Product Data	X											X									

SUBMITTAL REGISTER
(ER 415 1-10)

CONTRACT NO.

TITLE AND LOCATION: **Arvin Cadet Physical Development Center, Phase 2/3**

CONTRACTOR

SPECIFICATION SECTION: **07220**

ACTIVITY NO. a.	TRANS-MITTAL NO. b.	ITEM NO. c.	SPECIFICATION PARAGRAPH NUMBER d.	DESCRIPTION OF ITEM SUBMITTED e.	TYPE OF SUBMITTAL: INS	STA	CERTI	CLASSIFICATION: INFORMATION	GO APPROVED	REVIEWER r.	CONTRACTOR SCHEDULE DATES: SUBMIT s.	APPROVAL NEEDED BY t.	MATERIAL NEEDED BY u.	CONTRACTOR ACTION: CODE v.	DATE w.	SUBMIT TO GOVERNMENT x.	GOVERNMENT ACTION: CODE y.	DATE z.	REMARKS aa.
			3.7	Application of Insulation															
			1.2	Inspection		X		X											
			2.2	Insulation			X	X											

SUBMITTAL REGISTER
(ER 415 1-10)

CONTRACT NO.

TITLE AND LOCATION: **Arvin Cadet Physical Development Center, Phase 2/3**

CONTRACTOR

SPECIFICATION SECTION: **07240**

ACTIVITY NO. a.	TRANS-MITTAL NO. b.	ITEM NO. c.	SPECIFICATION PARAGRAPH NUMBER d.	DESCRIPTION OF ITEM SUBMITTED e.	TYPE OF SUBMITTAL: INS	STA	CERTI	CLASSIFICATION: INFORMATION	GO APPROVED p.	REVIEWER q.	CONTRACTOR SCHEDULE DATES: SUBMIT s.	APPROVAL NEEDED BY t.	MATERIAL NEEDED BY u.	CONTRACTOR ACTION: CODE v.	DATE w.	SUBMIT TO GOVERNMENT x.	GOVERNMENT ACTION: CODE y.	DATE z.	REMARKS aa.
			1.4	Exterior and Interior Finish System															
			1.4	Manufacturer's Approval and License															
			1.4	Exterior and Interior Finish System															
			1.4	Exterior and Interior Finish System															

SUBMITTAL REGISTER
(ER 415 1-10)

CONTRACT NO.

TITLE AND LOCATION
Arvin Cadet Physical Development Center, Phase 2/3

CONTRACTOR

SPECIFICATION SECTION
07413

ACTIVITY NO a.	TRANSMITTAL NO. b.	ITEM NO c.	SPECIFICATION PARAGRAPH NUMBER d.	DESCRIPTION OF ITEM SUBMITTED e.	TYPE OF SUBMITTAL: INSTALL f.	SAMPLE g.	CERT h.	O&M i.	CLASSIFICATION: INFORM j.	APPROVED k.	REVIEWER r.	CONTRACTOR SCHEDULE DATES: SUBMIT s.	APPROVAL NEEDED BY t.	MATERIAL NEEDED BY u.	CONTRACTOR ACTION: CODE v.	DATE w.	GOVERNMENT ACTION: SUBMIT TO GOVERNMENT x.	CODE y.	DATE z.	REMARKS aa.
			2.1	Siding	X					X										
			2.1	Siding			X		X											
			3.1	Installation			X		X											
			2.3	Accessories			X		X											
			1.3	Insulation			X			X										
			2.3	Accessories				X		X										
			2.1	Siding				X		X										
			2.4	Fasteners				X	X											

SUBMITTAL REGISTER
(ER 415 1-10)

CONTRACT NO.

TITLE AND LOCATION: **Arvin Cadet Physical Development Center, Phase 2/3**

CONTRACTOR

SPECIFICATION SECTION: **07551**

ACTIVITY NO. a.	TRANS-MITTAL NO. b.	ITEM NO. c.	SPECIFICATION PARAGRAPH NUMBER d.	DESCRIPTION OF ITEM SUBMITTED e.	TYPE OF SUBMITTAL: INS	STA	CERTI	CLASSIFICATION: INFORMATION	GO APPROVED g.	REVIEWER r.	CONTRACTOR SCHEDULE DATES: SUBMIT s.	APPROVAL NEEDED BY t.	MATERIAL NEEDED BY u.	CONTRACTOR ACTION: CODE v.	DATE w.	SUBMIT TO GOVERNMENT x.	GOVERNMENT ACTION: CODE y.	DATE z.	REMARKS aa.
			1.3	Materials and Installation															
			1.3	Qualifications			X	X											
			1.3	Materials			X	X											
			1.3	Bills of Lading				X	X										

SUBMITTAL REGISTER
(ER 415 1-10)

CONTRACT NO.

TITLE AND LOCATION: **Arvin Cadet Physical Development Center, Phase 2/3**

CONTRACTOR

SPECIFICATION SECTION: **07610**

ACTIVITY NO. a.	TRANS-MITTAL NO. b.	ITEM NO. c.	SPECIFICATION PARAGRAPH NUMBER d.	DESCRIPTION OF ITEM SUBMITTED e.	TYPE OF SUBMITTAL: INS	STA	CERTI	CLASSIFICATION: INFORMATION	GO APPROVED	REVIEWER r.	CONTRACTOR SCHEDULE DATES: SUBMIT s.	APPROVAL NEEDED BY t.	MATERIAL NEEDED BY u.	CONTRACTOR ACTION: CODE v.	DATE w.	SUBMIT TO GOVERNMENT x.	GOVERNMENT ACTION: CODE y.	DATE z.	REMARKS aa.
			2.7	Sealant	X			X											
			1.3	Copper Roof System					X										
			1.4	Qualifications		X		X											
			3.2	Field Testing			X	X											
			1.3	Copper Roof System				X											
			2.2	Accessories			X		X										
			2.1	Roof Panels			X		X										
			2.8	Fasteners			X		X										
			1.3	Concealed anchor clip					X										

SUBMITTAL REGISTER
(ER 415 1-10)

CONTRACT NO.

TITLE AND LOCATION: **Arvin Cadet Physical Development Center, Phase 2/3**

CONTRACTOR

SPECIFICATION SECTION: **07625**

ACTIVITY NO. a.	TRANS-MITTAL NO. b.	ITEM NO. c.	SPECIFICATION PARAGRAPH NUMBER d.	DESCRIPTION OF ITEM SUBMITTED e.	TYPE OF SUBMITTAL: INS	STA	CERTI	CLASSIFICATION: INFORMATION	GO APPROVED p.	REVIEWER r.	CONTRACTOR SCHEDULE DATES: SUBMIT s.	APPROVAL NEEDED BY t.	MATERIAL NEEDED BY u.	CONTRACTOR ACTION: CODE v.	DATE w.	SUBMIT TO GOVERNMENT x.	GOVERNMENT ACTION: CODE y.	DATE z.	REMARKS aa.
			1.3	Sheet Metal	X				X										
			1.3	Materials			X		X										
			1.3	Contractor Quality Control															

SUBMITTAL REGISTER
(ER 415 1-10)

CONTRACT NO.

TITLE AND LOCATION
Arvin Cadet Physical Development Center, Phase 2/3

CONTRACTOR

SPECIFICATION SECTION
07810

ACTIVITY NO a.	TRANSMITTAL NO. b.	ITEM NO c.	SPECIFICATION PARAGRAPH NUMBER d.	DESCRIPTION OF ITEM SUBMITTED e.	TYPE OF SUBMITTAL										CLASSIFICATION		REVIEWER r.	CONTRACTOR SCHEDULE DATES			CONTRACTOR ACTION		GOVERNMENT ACTION			REMARKS aa.
																		SUBMIT s.	APPROVAL NEEDED BY t.	MATERIAL NEEDED BY u.	CODE v.	DATE w.	SUBMIT TO GOVERNMENT x.	CODE y.	DATE z.	
			1.2	Fireproofing Material												X										
			1.2	UL Test Assembly											X											
			3.5	Field Tests					X						X											
			1.5	Installer Qualifications																						
			1.2	Surface Acceptability																						
			3.5.3	Manufacturer's Inspection																						
			1.2	Spray-Applied Fireproofing																						

SUBMITTAL REGISTER
(ER 415 1-10)

CONTRACT NO.

TITLE AND LOCATION: **Arvin Cadet Physical Development Center, Phase 2/3**

CONTRACTOR

SPECIFICATION SECTION: **07840**

ACTIVITY NO. a.	TRANS-MITTAL NO. b.	ITEM NO. c.	SPECIFICATION PARAGRAPH NUMBER d.	DESCRIPTION OF ITEM SUBMITTED e.	TYPE OF SUBMITTAL: INS	STA	CERTI	CLASSIFICATION: INFORMATION	GO APPROVED g.	REVIEWER r.	CONTRACTOR SCHEDULE DATES: SUBMIT s.	APPROVAL NEEDED BY t.	MATERIAL NEEDED BY u.	CONTRACTOR ACTION: CODE v.	DATE w.	SUBMIT TO GOVERNMENT x.	GOVERNMENT ACTION: CODE y.	DATE z.	REMARKS aa.
			2.1	Firestopping Materials															
			2.1	Firestopping Materials															
			1.5	Installer Qualifications															
			3.3	Inspection			X	X											

SUBMITTAL REGISTER
(ER 415 1-10)

CONTRACT NO.

TITLE AND LOCATION: **Arvin Cadet Physical Development Center, Phase 2/3**

CONTRACTOR

SPECIFICATION SECTION: **07900**

ACTIVITY NO. a.	TRANS-MITTAL NO. b.	ITEM NO. c.	SPECIFICATION PARAGRAPH NUMBER d.	DESCRIPTION OF ITEM SUBMITTED e.	TYPE OF SUBMITTAL									CLASSIFICATION			CONTRACTOR SCHEDULE DATES			CONTRACTOR ACTION			GOVERNMENT ACTION		
						INS	STA	CERTI						INFORMATION	GO APPROVED	REVIEWER	SUBMIT	APPROVAL NEEDED BY	MATERIAL NEEDED BY	CODE	DATE	SUBMIT TO GOVERNMENT	CODE	DATE	REMARKS
			1.2	Backing	X									X											
			1.2	Bond-Breaker	X									X											
			1.2	Sealant	X									X											
			1.2	Sealant						X				X											

SUBMITTAL REGISTER
(ER 415 1-10)

CONTRACT NO.

TITLE AND LOCATION: **Arvin Cadet Physical Development Center, Phase 2/3**

CONTRACTOR

SPECIFICATION SECTION: **07920**

ACTIVITY NO. a.	TRANS-MITTAL NO. b.	ITEM NO. c.	SPECIFICATION PARAGRAPH NUMBER d.	DESCRIPTION OF ITEM SUBMITTED e.	TYPE OF SUBMITTAL: INS	STA	CERTI	CLASSIFICATION: INFORMATION	GO APPROVED	REVIEWER r.	CONTRACTOR SCHEDULE DATES: SUBMIT s.	APPROVAL NEEDED BY t.	MATERIAL NEEDED BY u.	CONTRACTOR ACTION: CODE v.	DATE w.	SUBMIT TO GOVERNMENT x.	GOVERNMENT ACTION: CODE y.	DATE z.	REMARKS aa.
			1.1	Manufacturer's Descriptive Data															
			1.1	Certificates of Conformance or Compliance															
			1.1	Color Samples			X		X										

SUBMITTAL REGISTER
(ER 415 1-10)

CONTRACT NO.

TITLE AND LOCATION
Arvin Cadet Physical Development Center, Phase 2/3

CONTRACTOR

SPECIFICATION SECTION
08110

ACTIVITY NO a.	TRANSMITTAL NO. b.	ITEM NO c.	SPECIFICATION PARAGRAPH NUMBER d.	DESCRIPTION OF ITEM SUBMITTED e.	TYPE OF SUBMITTAL: INSTA	CERTI	CLASSIFICATION: INFORMA	GOVT APPROVED g.	REVIEWER r.	CONTRACTOR SCHEDULE DATES: SUBMIT s.	APPROVAL NEEDED BY t.	MATERIAL NEEDED BY u.	CONTRACTOR ACTION: CODE v.	DATE w.	SUBMIT TO GOVERNMENT x.	GOVERNMENT ACTION: CODE y.	DATE z.	REMARKS aa.
			1.2	Steel Doors and Frames														
			1.2	Fire Rated Doors			X											
			1.2	Fire Rated Doors		X	X											
			1.2	Thermal Insulated Doors														
			1.2	Sound Rated Doors			X											
			1.2	Steel Doors and Frames														

SUBMITTAL REGISTER
(ER 415 1-10)

CONTRACT NO.

TITLE AND LOCATION: **Arvin Cadet Physical Development Center, Phase 2/3**

CONTRACTOR

SPECIFICATION SECTION: **08120**

ACTIVITY NO. a.	TRANS-MITTAL NO. b.	ITEM NO. c.	SPECIFICATION PARAGRAPH NUMBER d.	DESCRIPTION OF ITEM SUBMITTED e.	TYPE OF SUBMITTAL: INS	STA	CERTI	CLASSIFICATION: INFORMATION	GO APPROVED	REVIEWER r.	CONTRACTOR SCHEDULE DATES: SUBMIT s.	APPROVAL NEEDED BY t.	MATERIAL NEEDED BY u.	CONTRACTOR ACTION: CODE v.	DATE w.	SUBMIT TO GOVERNMENT x.	GOVERNMENT ACTION: CODE y.	DATE z.	REMARKS aa.
			1.2	Steel Doors and Frames															
			1.2	Fire Rated Doors				X											
			1.2	Fire Rated Doors			X	X											
			1.2	Steel Doors and Frames															

SUBMITTAL REGISTER
(ER 415 1-10)

CONTRACT NO.

TITLE AND LOCATION: **Arvin Cadet Physical Development Center, Phase 2/3**

CONTRACTOR

SPECIFICATION SECTION: **08210**

ACTIVITY NO. a.	TRANS-MITTAL NO. b.	ITEM NO. c.	SPECIFICATION PARAGRAPH NUMBER d.	DESCRIPTION OF ITEM SUBMITTED e.	TYPE OF SUBMITTAL: INS	STA	CERTI	CLASSIFICATION: INFORMATION	GO APPROVED	REVIEWER r.	CONTRACTOR SCHEDULE DATES: SUBMIT s.	APPROVAL NEEDED BY t.	MATERIAL NEEDED BY u.	CONTRACTOR ACTION: CODE v.	DATE w.	SUBMIT TO GOVERNMENT x.	GOVERNMENT ACTION: CODE y.	DATE z.	REMARKS aa.
			1.3	Wood Doors	X				X										
			3.1.2	Fire Doors		X		X											
			2.4	Fire Rated Doors			X		X										
			1.3	Adhesives			X	X											
			1.3	Factory Coated Paint Finish															

SUBMITTAL REGISTER
(ER 415 1-10)

CONTRACT NO.

TITLE AND LOCATION: **Arvin Cadet Physical Development Center, Phase 2/3**

CONTRACTOR

SPECIFICATION SECTION: **08212**

ACTIVITY NO. a.	TRANS-MITTAL NO. b.	ITEM NO. c.	SPECIFICATION PARAGRAPH NUMBER d.	DESCRIPTION OF ITEM SUBMITTED e.	TYPE OF SUBMITTAL: INS	STA	CERTI	CLASSIFICATION: INFORMATION	GO APPROVED	REVIEWER r.	CONTRACTOR SCHEDULE DATES: SUBMIT s.	APPROVAL NEEDED BY t.	MATERIAL NEEDED BY u.	CONTRACTOR ACTION: CODE v.	DATE w.	SUBMIT TO GOVERNMENT x.	GOVERNMENT ACTION: CODE y.	DATE z.	REMARKS aa.
			1.2	Stile and Rail Wood Doors															
			1.2	Wood Door Frames					X										
			1.2	Stile and Rail Wood Doors															
			1.2	Wood Door Frames					X										
			1.2	Stile and Rail Wood Doors															
			1.2	Wood Door Frames			X												
			1.2	Stile and Rail Wood Doors															
			1.2	Wood Door Frames				X											

SUBMITTAL REGISTER
(ER 415 1-10)

CONTRACT NO.

TITLE AND LOCATION: **Arvin Cadet Physical Development Center, Phase 2/3**

CONTRACTOR

SPECIFICATION SECTION: **08330**

ACTIVITY NO. a.	TRANS-MITTAL NO. b.	ITEM NO. c.	SPECIFICATION PARAGRAPH NUMBER d.	DESCRIPTION OF ITEM SUBMITTED e.	TYPE OF SUBMITTAL									CLASSIFICATION			CONTRACTOR SCHEDULE DATES			CONTRACTOR ACTION			GOVERNMENT ACTION		
						INS	STA	CERTI						INFORMATION	GO APPROVED	REVIEWER	SUBMIT	APPROVAL NEEDED BY	MATERIAL NEEDED BY	CODE	DATE	SUBMIT TO GOVERNMENT	CODE	DATE	REMARKS
			1.3	Overhead Rolling Door Unit																					
			1.3	GAFIO	X																				
			1.3	Overhead Rolling Door Unit																					
			1.3	Overhead Rolling Door Unit																					
			2.2	Fire Doors						X				X											
			1.3	Overhead Rolling Door Unit																					
			1.3	Operation Manual										X											
			1.3	Maintenance and Repair Manual																					

SUBMITTAL REGISTER
(ER 415 1-10)

CONTRACT NO.

TITLE AND LOCATION
Arvin Cadet Physical Development Center, Phase 2/3

CONTRACTOR

SPECIFICATION SECTION
08331

ACTIVITY NO a.	TRANSMITTAL NO. b.	ITEM NO c.	SPECIFICATION PARAGRAPH NUMBER d.	DESCRIPTION OF ITEM SUBMITTED e.	TYPE OF SUBMITTAL										CLASSIFICATION (IF APPROVED) p.	GOVT APPROVED q.	REVIEWER r.	CONTRACTOR SCHEDULE DATES			CONTRACTOR ACTION		GOVERNMENT ACTION			REMARKS aa.
																		SUBMIT s.	APPROVAL NEEDED BY t.	MATERIAL NEEDED BY u.	CODE v.	DATE w.	SUBMIT TO GOVERNMENT x.	CODE y.	DATE z.	
			1.3	Rolling Counter Door Unit																					
			1.3	Rolling Counter Door Unit																					
			1.3	Rolling Counter Door Unit																					
			1.3	Rolling Counter Door Unit																					

SUBMITTAL REGISTER
(ER 415 1-10)

CONTRACT NO.

TITLE AND LOCATION: **Arvin Cadet Physical Development Center, Phase 2/3**

CONTRACTOR

SPECIFICATION SECTION: **08353**

ACTIVITY NO. a.	TRANS-MITTAL NO. b.	ITEM NO. c.	SPECIFICATION PARAGRAPH NUMBER d.	DESCRIPTION OF ITEM SUBMITTED e.	TYPE OF SUBMITTAL: INS	STA	CERTI	CLASSIFICATION: INFORMATION	GO APPROVED	REVIEWER r.	CONTRACTOR SCHEDULE DATES: SUBMIT s.	APPROVAL NEEDED BY t.	MATERIAL NEEDED BY u.	CONTRACTOR ACTION: CODE v.	DATE w.	SUBMIT TO GOVERNMENT x.	GOVERNMENT ACTION: CODE y.	DATE z.	REMARKS aa.
			1.2	Operable Partitions					X										
			1.2	Operable Partitions					X										
			1.2	Materials			X												
			1.2	Operable Partitions				X											
			1.2	Operable Partitions					X										
			1.2	Operable Partitions				X											

SUBMITTAL REGISTER
(ER 415 1-10)

CONTRACT NO.

TITLE AND LOCATION: **Arvin Cadet Physical Development Center, Phase 2/3**

CONTRACTOR

SPECIFICATION SECTION: **08520**

ACTIVITY NO. a.	TRANS-MITTAL NO. b.	ITEM NO. c.	SPECIFICATION PARAGRAPH NUMBER d.	DESCRIPTION OF ITEM SUBMITTED e.	TYPE OF SUBMITTAL: INS	STA	CERTI	CLASSIFICATION: INFORMATION	GO APPROVED	REVIEWER r.	CONTRACTOR SCHEDULE DATES: SUBMIT s.	APPROVAL NEEDED BY t.	MATERIAL NEEDED BY u.	CONTRACTOR ACTION: CODE v.	DATE w.	SUBMIT TO GOVERNMENT x.	GOVERNMENT ACTION: CODE y.	DATE z.	REMARKS aa.
			1.3	Aluminum Windows				X											
			1.3	Aluminum Windows					X										
			1.3	Aluminum Windows				X											
			1.3	Aluminum Windows				X											
			1.3	Aluminum Windows			X	X											
			1.3	Aluminum Windows			X		X										

SUBMITTAL REGISTER
(ER 415 1-10)

CONTRACT NO.

TITLE AND LOCATION: **Arvin Cadet Physical Development Center, Phase 2/3**

CONTRACTOR

SPECIFICATION SECTION: **08700**

ACTIVITY NO. a.	TRANS-MITTAL NO. b.	ITEM NO. c.	SPECIFICATION PARAGRAPH NUMBER d.	DESCRIPTION OF ITEM SUBMITTED e.	TYPE OF SUBMITTAL: INS	STA	CERTI	CLASSIFICATION: INFORMATION	GO APPROVED p.	REVIEWER r.	CONTRACTOR SCHEDULE DATES: SUBMIT s.	APPROVAL NEEDED BY t.	MATERIAL NEEDED BY u.	CONTRACTOR ACTION: CODE v.	DATE w.	SUBMIT TO GOVERNMENT x.	GOVERNMENT ACTION: CODE y.	DATE z.	REMARKS aa.
			1.2	Hardware and Accessories															
			1.2	Hardware Devices					X										
			1.2	Hardware Schedule					X										
			1.2	Keying Schedule					X										
			1.2	Hardware and Accessories															

SUBMITTAL REGISTER
(ER 415 1-10)

CONTRACT NO.

TITLE AND LOCATION
Arvin Cadet Physical Development Center, Phase 2/3

CONTRACTOR

SPECIFICATION SECTION
08810

ACTIVITY NO a.	TRANSMITTAL NO. b.	ITEM NO c.	SPECIFICATION PARAGRAPH NUMBER d.	DESCRIPTION OF ITEM SUBMITTED e.	TYPE OF SUBMITTAL									CLASSIFICATION		REVIEWER r.	CONTRACTOR SCHEDULE DATES			CONTRACTOR ACTION		GOVERNMENT ACTION			REMARKS aa.
					f.	g.	h.	i.	j.	k.	l.	m.	o.	p.	q.		s. SUBMIT	t. APPROVAL NEEDED BY	u. MATERIAL NEEDED BY	v. CODE	w. DATE	x. SUBMIT TO GOVERNMENT	v. CODE	z. DATE	
			1.2	Glass	X									X										
			1.2	Glazing Accessories										X										
			1.2	Glazing Materials and Accessories																				
			2.3.14	Glass Shelf Support System																				
			1.2	Glass						X				X										
			1.2	Glass							X				X									

SUBMITTAL REGISTER
(ER 415 1-10)

CONTRACT NO.

TITLE AND LOCATION: **Arvin Cadet Physical Development Center, Phase 2/3**

CONTRACTOR

SPECIFICATION SECTION: **08900**

ACTIVITY NO. a.	TRANS-MITTAL NO. b.	ITEM NO. c.	SPECIFICATION PARAGRAPH NUMBER d.	DESCRIPTION OF ITEM SUBMITTED e.	TYPE OF SUBMITTAL: INS	STA	CERTI	CLASSIFICATION: INFORMATION	GO APPROVED	REVIEWER r.	CONTRACTOR SCHEDULE DATES: SUBMIT s.	APPROVAL NEEDED BY t.	MATERIAL NEEDED BY u.	CONTRACTOR ACTION: CODE v.	DATE w.	SUBMIT TO GOVERNMENT x.	GOVERNMENT ACTION: CODE y.	DATE z.	REMARKS aa.
			1.3	Curtain Wall System Components															
			1.3	Curtain Wall System Components															
			1.3	Product Test Reports					X										
			1.3	Field Test Reports					X										
			1.3	Welder Certificates				X											
			1.3	Installer Certificates															
			1.3	Color Samples			X		X										
			1.3	Cutaway Samples			X		X										

SUBMITTAL REGISTER
(ER 415 1-10)

CONTRACT NO.

TITLE AND LOCATION: **Arvin Cadet Physical Development Center, Phase 2/3**

CONTRACTOR

SPECIFICATION SECTION: **08950**

ACTIVITY NO. a.	TRANS-MITTAL NO. b.	ITEM NO. c.	SPECIFICATION PARAGRAPH NUMBER d.	DESCRIPTION OF ITEM SUBMITTED e.	TYPE OF SUBMITTAL: INS	STA	CERTI	CLASSIFICATION: INFORMATION	GO APPROVED	REVIEWER r.	CONTRACTOR SCHEDULE DATES: SUBMIT s.	APPROVAL NEEDED BY t.	MATERIAL NEEDED BY u.	CONTRACTOR ACTION: CODE v.	DATE w.	SUBMIT TO GOVERNMENT x.	GOVERNMENT ACTION: CODE y.	DATE z.	REMARKS aa.
			1.2	Translucent Panel System															
			1.2	Translucent Panel System															
			1.2	Product Test Reports															
			1.2	Installer Certificates															
			1.2	Glazing Materials					X										
			1.2	Samples for Selection						X									
			1.2	Samples for Verification															
			1.2	Cutaway Samples				X		X									

SUBMITTAL REGISTER
(ER 415 1-10)

CONTRACT NO.

TITLE AND LOCATION: **Arvin Cadet Physical Development Center, Phase 2/3**

CONTRACTOR

SPECIFICATION SECTION: **08960**

ACTIVITY NO. a.	TRANS-MITTAL NO. b.	ITEM NO. c.	SPECIFICATION PARAGRAPH NUMBER d.	DESCRIPTION OF ITEM SUBMITTED e.	TYPE OF SUBMITTAL: INS	STA	CERTI	CLASSIFICATION: INFORMATION	GO APPROVED g.	REVIEWER r.	CONTRACTOR SCHEDULE DATES: SUBMIT s.	APPROVAL NEEDED BY t.	MATERIAL NEEDED BY u.	CONTRACTOR ACTION: CODE v.	DATE w.	SUBMIT TO GOVERNMENT x.	GOVERNMENT ACTION: CODE y.	DATE z.	REMARKS aa.
			1.2	Canopy Shop Drawings					X										
			1.2	Calculations			X	X											
			1.2	Initial Selection Samples															
			1.2	Verification Samples															

SUBMITTAL REGISTER
(ER 415 1-10)

CONTRACT NO.

TITLE AND LOCATION: **Arvin Cadet Physical Development Center, Phase 2/3**

CONTRACTOR

SPECIFICATION SECTION: **09155**

ACTIVITY NO. a.	TRANS-MITTAL NO. b.	ITEM NO. c.	SPECIFICATION PARAGRAPH NUMBER d.	DESCRIPTION OF ITEM SUBMITTED e.	TYPE OF SUBMITTAL: INS	STA	CERTI	CLASSIFICATION: INFORMATION	GO APPROVED	REVIEWER r.	CONTRACTOR SCHEDULE DATES: SUBMIT s.	APPROVAL NEEDED BY t.	MATERIAL NEEDED BY u.	CONTRACTOR ACTION: CODE v.	DATE w.	SUBMIT TO GOVERNMENT x.	GOVERNMENT ACTION: CODE y.	DATE z.	REMARKS aa.
			1.1	Test Reports			X		X										
			1.1	Certificates			X		X										
			1.1	Plaster Samples				X		X									

SUBMITTAL REGISTER
(ER 415 1-10)

CONTRACT NO.

TITLE AND LOCATION
Arvin Cadet Physical Development Center, Phase 2/3

CONTRACTOR

SPECIFICATION SECTION
09200

ACTIVITY NO a.	TRANSMITTAL NO. b.	ITEM NO c.	SPECIFICATION PARAGRAPH NUMBER d.	DESCRIPTION OF ITEM SUBMITTED e.	TYPE OF SUBMITTAL										CLASSIFICATION		REVIEWER r.	CONTRACTOR SCHEDULE DATES			CONTRACTOR ACTION		GOVERNMENT ACTION			REMARKS aa.
					f.	g.	h.	i.	j.	k.	l.	m.	n.	o.	p.	q.		s. SUBMIT	t. APPROVAL NEEDED BY	u. MATERIAL NEEDED BY	v. CODE	w. DATE	x. SUBMIT TO GOVERNMENT	v. CODE	z. DATE	
			1.3	Plastering Materials and Accessories																						
			1.3	Lath and Plaster											X											
			2.6	Gypsum Plaster						X						X										

SUBMITTAL REGISTER
(ER 415 1-10)

CONTRACT NO.

TITLE AND LOCATION
Arvin Cadet Physical Development Center, Phase 2/3

CONTRACTOR

SPECIFICATION SECTION
09215

ACTIVITY NO a.	TRANSMITTAL NO. b.	ITEM NO c.	SPECIFICATION PARAGRAPH NUMBER d.	DESCRIPTION OF ITEM SUBMITTED e.	TYPE OF SUBMITTAL										CLASSIFICATION		REVIEWER r.	CONTRACTOR SCHEDULE DATES			CONTRACTOR ACTION		GOVERNMENT ACTION			REMARKS aa.
					f.	g.	h.	i.	j.	k.	l.	m.	n.	o.	p.	q.		s. SUBMIT	t. APPROVAL NEEDED BY	u. MATERIAL NEEDED BY	v. CODE	w. DATE	x. SUBMIT TO GOVERNMENT	v. CODE	z. DATE	
			1.3	Plastering Materials and Accessories																					
			1.3	Lath and Plaster											X										
			1.3	Gypsum Plaster							X				X										
			1.3	Gypsum Plaster								X				X									

SUBMITTAL REGISTER
(ER 415 1-10)

CONTRACT NO.

TITLE AND LOCATION: **Arvin Cadet Physical Development Center, Phase 2/3**

CONTRACTOR

SPECIFICATION SECTION: **09250**

ACTIVITY NO. a.	TRANS-MITTAL NO. b.	ITEM NO. c.	SPECIFICATION PARAGRAPH NUMBER d.	DESCRIPTION OF ITEM SUBMITTED e.	TYPE OF SUBMITTAL	CLASSIFICATION INFORMATION p.	CLASSIFICATION GO APPROVED q.	REVIEWER r.	CONTRACTOR SCHEDULE DATES SUBMIT s.	CONTRACTOR SCHEDULE DATES APPROVAL NEEDED BY t.	CONTRACTOR SCHEDULE DATES MATERIAL NEEDED BY u.	CONTRACTOR ACTION CODE v.	CONTRACTOR ACTION DATE w.	CONTRACTOR ACTION SUBMIT TO GOVERNMENT x.	GOVERNMENT ACTION CODE y.	GOVERNMENT ACTION DATE z.	REMARKS aa.
			1.3	Steel Framing		X											
			1.3	Control Joints		X											
			3.7	Fire-Resistant Assemblies													
			1.3	Gypsum Wallboard	X	X											
			2.2.5	Water-Resistant Gypsum Board													
			1.3	Steel Framing	X	X											
			2.2.4	Fire-Rated Gypsum Board													

SUBMITTAL REGISTER
(ER 415 1-10)

CONTRACT NO.

TITLE AND LOCATION: **Arvin Cadet Physical Development Center, Phase 2/3**

CONTRACTOR

SPECIFICATION SECTION: **09310**

ACTIVITY NO. a.	TRANS-MITTAL NO. b.	ITEM NO. c.	SPECIFICATION PARAGRAPH NUMBER d.	DESCRIPTION OF ITEM SUBMITTED e.	TYPE OF SUBMITTAL										CLASSIFICATION		REVIEWER r.	CONTRACTOR SCHEDULE DATES			CONTRACTOR ACTION			GOVERNMENT ACTION		REMARKS aa.
						INS		STA		CERTI					INFORMATION	GO APPROVED		SUBMIT s.	APPROVAL NEEDED BY t.	MATERIAL NEEDED BY u.	CODE v.	DATE w.	SUBMIT TO GOVERNMENT x.	CODE y.	DATE z.	
			2.1	Tile	X										X											
			2.2	Setting-Bed	X										X											
			1.2	Mortar, Grout, and Adhesive																						
			2.1	Tile			X								X											
			2.3	Mortar and Grout											X											
			1.2	Testing						X					X											
			2.1	Tile							X				X											
			1.2	Mortar, Grout, and Adhesive																						
			2.1	Tile								X				X										
			1.2	Accessories								X				X										
			2.4	Marble Thresholds								X				X										

SUBMITTAL REGISTER
(ER 415 1-10)

CONTRACT NO.

TITLE AND LOCATION: **Arvin Cadet Physical Development Center, Phase 2/3**

CONTRACTOR

SPECIFICATION SECTION: **09380**

ACTIVITY NO. a.	TRANS-MITTAL NO. b.	ITEM NO. c.	SPECIFICATION PARAGRAPH NUMBER d.	DESCRIPTION OF ITEM SUBMITTED e.	TYPE OF SUBMITTAL: INS	STA	CERTI	CLASSIFICATION: INFORMATION	GO APPROVED	REVIEWER r.	CONTRACTOR SCHEDULE DATES: SUBMIT s.	APPROVAL NEEDED BY t.	MATERIAL NEEDED BY u.	CONTRACTOR ACTION: CODE v.	DATE w.	SUBMIT TO GOVERNMENT x.	GOVERNMENT ACTION: CODE y.	DATE z.	REMARKS aa.
			1.2	Manufacturer's Printed Data															
			1.2	Master Grade Certificates															
			1.2	Tile Samples			X		X										
			1.2	Joint Grout Samples					X										

SUBMITTAL REGISTER
(ER 415 1-10)

CONTRACT NO.

TITLE AND LOCATION: **Arvin Cadet Physical Development Center, Phase 2/3**

CONTRACTOR

SPECIFICATION SECTION: **09445**

ACTIVITY NO. a.	TRANS-MITTAL NO. b.	ITEM NO. c.	SPECIFICATION PARAGRAPH NUMBER d.	DESCRIPTION OF ITEM SUBMITTED e.	TYPE OF SUBMITTAL: INS	STA	CERTI	CLASSIFICATION: INFORMATION	GO APPROVED p.	REVIEWER r.	CONTRACTOR SCHEDULE DATES: SUBMIT s.	APPROVAL NEEDED BY t.	MATERIAL NEEDED BY u.	CONTRACTOR ACTION: CODE v.	DATE w.	SUBMIT TO GOVERNMENT x.	GOVERNMENT ACTION: CODE y.	DATE z.	REMARKS aa.
			1.3	Terrazzo Floor System					X										
			3.2	Mixing, Proportioning, and Installation															
			3.3	Cleaning and Sealing															
			1.3	Terrazzo Floor System					X										
			1.3	Class of 1965 Crest					X										
			1.3	Terrazzo Floor System					X										
			1.3	Terrazzo Systems, Initial Selection															
			1.3	Class of 1965 Crest, Initial Color Samples															
			1.3	Terrazzo Systems, Verification Samples															
			1.3	Class of 1965 Crest, Verification Color Samples															

SUBMITTAL REGISTER
(ER 415 1-10)

CONTRACT NO.

TITLE AND LOCATION
Arvin Cadet Physical Development Center, Phase 2/3

CONTRACTOR

SPECIFICATION SECTION
09446

ACTIVITY NO a.	TRANSMITTAL NO. b.	ITEM NO c.	SPECIFICATION PARAGRAPH NUMBER d.	DESCRIPTION OF ITEM SUBMITTED e.	TYPE OF SUBMITTAL: INSTALL f.	SAMPLE g.	CERT h.	O&M i.	CLASSIFICATION: INFORM j.	APPROVED k.	REVIEWER r.	CONTRACTOR SCHEDULE DATES: SUBMIT s.	APPROVAL NEEDED BY t.	MATERIAL NEEDED BY u.	CONTRACTOR ACTION: CODE v.	DATE w.	SUBMIT TO GOVERNMENT x.	GOVERNMENT ACTION: CODE y.	DATE z.	REMARKS aa.
			1.3	Precast Terrazzo Stair Treads																
			1.3	Precast Terrazzo Stair Treads																
			1.3	Wall Base	X					X										
			1.3	Maintenance Instructions																
			1.3	Material Certification																
			1.3	Stair Tread Initial Selection Samples																
			1.3	Wall Base Initial Selection Samples																
			1.3	Stair Tread Verification Samples																
			1.3	Wall Base Verification Samples																

SUBMITTAL REGISTER
(ER 415 1-10)

CONTRACT NO.

TITLE AND LOCATION: **Arvin Cadet Physical Development Center, Phase 2/3**

CONTRACTOR

SPECIFICATION SECTION: **09510**

ACTIVITY NO. a.	TRANS-MITTAL NO. b.	ITEM NO. c.	SPECIFICATION PARAGRAPH NUMBER d.	DESCRIPTION OF ITEM SUBMITTED e.	TYPE OF SUBMITTAL: INS	STA	CERTI	CLASSIFICATION: INFORMATION	GO APPROVED	REVIEWER r.	CONTRACTOR SCHEDULE DATES: SUBMIT s.	APPROVAL NEEDED BY t.	MATERIAL NEEDED BY u.	CONTRACTOR ACTION: CODE v.	DATE w.	SUBMIT TO GOVERNMENT x.	GOVERNMENT ACTION: CODE y.	DATE z.	REMARKS aa.
			1.3	Acoustical Ceiling System															
			1.3	Acoustical Ceiling System															
			1.3	Fire Resistive Ceilings															
			2.5	Ceiling Attenuation Class and Test															
			2.1	Acoustical Units			X		X										
			2.1	Acoustical Units				X		X									

SUBMITTAL REGISTER
(ER 415 1-10)

CONTRACT NO.

TITLE AND LOCATION: **Arvin Cadet Physical Development Center, Phase 2/3**

CONTRACTOR

SPECIFICATION SECTION: **09600**

ACTIVITY NO. a.	TRANS-MITTAL NO. b.	ITEM NO. c.	SPECIFICATION PARAGRAPH NUMBER d.	DESCRIPTION OF ITEM SUBMITTED e.	TYPE OF SUBMITTAL										CLASSIFICATION		REVIEWER r.	CONTRACTOR SCHEDULE DATES			CONTRACTOR ACTION			GOVERNMENT ACTION		REMARKS aa.
						INS	STA	CERTI							INFORMATION	GO APPROVED		SUBMIT s.	APPROVAL NEEDED BY t.	MATERIAL NEEDED BY u.	CODE v.	DATE w.	SUBMIT TO GOVERNMENT x.	CODE y.	DATE z.	
			1.3	Stone	X										X											
			1.3	Stone Accessories											X											
			1.3	Shop Drawings												X										
			1.3	Certificate of Experience																						
			1.3	Stone							X					X										
			1.3	Stone Anchors							X					X										

SUBMITTAL REGISTER
(ER 415 1-10)

CONTRACT NO.

TITLE AND LOCATION: **Arvin Cadet Physical Development Center, Phase 2/3**

CONTRACTOR

SPECIFICATION SECTION: **09620**

ACTIVITY NO. a.	TRANS-MITTAL NO. b.	ITEM NO. c.	SPECIFICATION PARAGRAPH NUMBER d.	DESCRIPTION OF ITEM SUBMITTED e.	TYPE OF SUBMITTAL: INS	STA	CERTI	CLASSIFICATION: INFORMATION	GO APPROVED p.	REVIEWER r.	CONTRACTOR SCHEDULE DATES: SUBMIT s.	APPROVAL NEEDED BY t.	MATERIAL NEEDED BY u.	CONTRACTOR ACTION: CODE v.	DATE w.	SUBMIT TO GOVERNMENT x.	GOVERNMENT ACTION: CODE y.	DATE z.	REMARKS aa.
			1.2	Resilient Athletic Flooring and Accessories															
			1.2	Resilient Athletic Flooring and Accessories															
			1.2	Resilient Athletic Flooring and Accessories															
			1.2	Resilient Athletic Flooring and Accessories															

SUBMITTAL REGISTER
(ER 415 1-10)

CONTRACT NO.

TITLE AND LOCATION: **Arvin Cadet Physical Development Center, Phase 2/3**

CONTRACTOR

SPECIFICATION SECTION: **09640**

ACTIVITY NO. a.	TRANS-MITTAL NO. b.	ITEM NO. c.	SPECIFICATION PARAGRAPH NUMBER d.	DESCRIPTION OF ITEM SUBMITTED e.	TYPE OF SUBMITTAL									CLASSIFICATION			CONTRACTOR SCHEDULE DATES			CONTRACTOR ACTION			GOVERNMENT ACTION		
						INS		STA		CERTI				INFORMATION	GO APPROVED	REVIEWER r.	SUBMIT s.	APPROVAL NEEDED BY t.	MATERIAL NEEDED BY u.	CODE v.	DATE w.	SUBMIT TO GOVERNMENT x.	CODE y.	DATE z.	REMARKS aa.
			1.3	Flooring Systems											X										
			1.3	Wood Floors	X										X										
			3.2	Installation		X								X											
			1.3	Strip Flooring							X				X										

SUBMITTAL REGISTER
(ER 415 1-10)

CONTRACT NO.

TITLE AND LOCATION
Arvin Cadet Physical Development Center, Phase 2/3

CONTRACTOR

SPECIFICATION SECTION
09650

ACTIVITY NO a.	TRANSMITTAL NO. b.	ITEM NO c.	SPECIFICATION PARAGRAPH NUMBER d.	DESCRIPTION OF ITEM SUBMITTED e.	TYPE OF SUBMITTAL										CLASSIFICATION		REVIEWER r.	CONTRACTOR SCHEDULE DATES			CONTRACTOR ACTION		GOVERNMENT ACTION		REMARKS aa.
																		SUBMIT s.	APPROVAL NEEDED BY t.	MATERIAL NEEDED BY u.	CODE v.	DATE w.	SUBMIT TO GOVERNMENT x.	CODE y.	DATE z.	
			1.3	Resilient Flooring and Accessories																					
			1.3	Resilient Flooring and Accessories																					
			1.3	Resilient Flooring and Accessories																					

SUBMITTAL REGISTER
(ER 415 1-10)

CONTRACT NO.

TITLE AND LOCATION: **Arvin Cadet Physical Development Center, Phase 2/3**

CONTRACTOR

SPECIFICATION SECTION: **09670**

ACTIVITY NO. a.	TRANS-MITTAL NO. b.	ITEM NO. c.	SPECIFICATION PARAGRAPH NUMBER d.	DESCRIPTION OF ITEM SUBMITTED e.	TYPE OF SUBMITTAL: INS	STA	CERTI	CLASSIFICATION: INFORMATION	GO APPROVED	REVIEWER r.	CONTRACTOR SCHEDULE DATES: SUBMIT s.	APPROVAL NEEDED BY t.	MATERIAL NEEDED BY u.	CONTRACTOR ACTION: CODE v.	DATE w.	SUBMIT TO GOVERNMENT x.	GOVERNMENT ACTION: CODE y.	DATE z.	REMARKS aa.
			1.3	Flooring System					X										
			1.3	Flooring System				X											
			1.3	Testing		X		X											
			1.3	Flooring System			X	X											
			1.3	Flooring System			X		X										

SUBMITTAL REGISTER
(ER 415 1-10)

CONTRACT NO.

TITLE AND LOCATION: **Arvin Cadet Physical Development Center, Phase 2/3**

CONTRACTOR

SPECIFICATION SECTION: **09680**

ACTIVITY NO. a.	TRANS-MITTAL NO. b.	ITEM NO. c.	SPECIFICATION PARAGRAPH NUMBER d.	DESCRIPTION OF ITEM SUBMITTED e.	TYPE OF SUBMITTAL: INS	STA	CERTI	CLASSIFICATION: INFORMATION	GO APPROVED	REVIEWER r.	CONTRACTOR SCHEDULE DATES: SUBMIT s.	APPROVAL NEEDED BY t.	MATERIAL NEEDED BY u.	CONTRACTOR ACTION: CODE v.	DATE w.	SUBMIT TO GOVERNMENT x.	GOVERNMENT ACTION: CODE y.	DATE z.	REMARKS aa.
			1.2	Carpet and Accessories															
			3.4	Installation	X				X										
			1.2	Carpet and Accessories															
			1.2	Moisture and Alkalinity Tests															
			1.2	Carpet and Accessories															
			1.2	Carpet and Accessories															
			1.2	Carpet and Accessories															

SUBMITTAL REGISTER
(ER 415 1-10)

CONTRACT NO.

TITLE AND LOCATION: **Arvin Cadet Physical Development Center, Phase 2/3**

CONTRACTOR

SPECIFICATION SECTION: **09840**

ACTIVITY NO. a.	TRANS-MITTAL NO. b.	ITEM NO. c.	SPECIFICATION PARAGRAPH NUMBER d.	DESCRIPTION OF ITEM SUBMITTED e.	TYPE OF SUBMITTAL: INS	STA	CERTI	CLASSIFICATION: INFORMATION	GO	APPROVED	REVIEWER r.	CONTRACTOR SCHEDULE DATES: SUBMIT s.	APPROVAL NEEDED BY t.	MATERIAL NEEDED BY u.	CONTRACTOR ACTION: CODE v.	DATE w.	SUBMIT TO GOVERNMENT x.	GOVERNMENT ACTION: CODE y.	DATE z.	REMARKS aa.
			1.1	Acoustical Wall Panels																
			1.1	Acoustical Wall Panels																
			1.1	Acoustical Wall Panels																
			1.1	Acoustical Wall Panels																
			1.1	Acoustical Wall Panels																

SUBMITTAL REGISTER
(ER 415 1-10)

CONTRACT NO.

TITLE AND LOCATION: **Arvin Cadet Physical Development Center, Phase 2/3**

CONTRACTOR

SPECIFICATION SECTION: **09900**

ACTIVITY NO. a.	TRANS-MITTAL NO. b.	ITEM NO. c.	SPECIFICATION PARAGRAPH NUMBER d.	DESCRIPTION OF ITEM SUBMITTED e.	TYPE OF SUBMITTAL										CLASSIFICATION			CONTRACTOR SCHEDULE DATES			CONTRACTOR ACTION			GOVERNMENT ACTION		REMARKS aa.
						INS		STA		CERTI					INFORMATION	GO APPROVED	REVIEWER r.	SUBMIT s.	APPROVAL NEEDED BY t.	MATERIAL NEEDED BY u.	CODE v.	DATE w.	SUBMIT TO GOVERNMENT x.	CODE y.	DATE z.	
			2.1	Paint	X											X										
			3.4	Mixing and Thinning											X											
			3.5	Application			X								X											
			2.1	Paint						X					X											
			2.1.3	Lead							X				X											
			2.1.2	Mildewcide and Insecticide																						
			2.1.5	Volatile Organic Compound (VOC) Content																						
			1.2	Moisture-Curing Polyurethane																						
			2.1	Paint								X				X										

SUBMITTAL REGISTER
(ER 415 1-10)

CONTRACT NO.

TITLE AND LOCATION: **Arvin Cadet Physical Development Center, Phase 2/3**

CONTRACTOR

SPECIFICATION SECTION: **09915**

ACTIVITY NO. a.	TRANS-MITTAL NO. b.	ITEM NO. c.	SPECIFICATION PARAGRAPH NUMBER d.	DESCRIPTION OF ITEM SUBMITTED e.	TYPE OF SUBMITTAL: INS	STA	CERTI	CLASSIFICATION: INFORMATION	GO APPROVED	REVIEWER r.	CONTRACTOR SCHEDULE DATES: SUBMIT s.	APPROVAL NEEDED BY t.	MATERIAL NEEDED BY u.	CONTRACTOR ACTION: CODE v.	DATE w.	SUBMIT TO GOVERNMENT x.	GOVERNMENT ACTION: CODE y.	DATE z.	REMARKS aa.
			1.2	Color board			X		X										

SUBMITTAL REGISTER
(ER 415 1-10)

CONTRACT NO.

TITLE AND LOCATION: **Arvin Cadet Physical Development Center, Phase 2/3**

CONTRACTOR

SPECIFICATION SECTION: **09945**

ACTIVITY NO. a.	TRANS-MITTAL NO. b.	ITEM NO. c.	SPECIFICATION PARAGRAPH NUMBER d.	DESCRIPTION OF ITEM SUBMITTED e.	TYPE OF SUBMITTAL: INS	STA	CERTI	CLASSIFICATION: INFORMATION	GO	APPROVED p.	REVIEWER q.	CONTRACTOR SCHEDULE DATES: SUBMIT s.	APPROVAL NEEDED BY t.	MATERIAL NEEDED BY u.	CONTRACTOR ACTION: CODE v.	DATE w.	SUBMIT TO GOVERNMENT x.	GOVERNMENT ACTION: CODE y.	DATE z.	REMARKS aa.
			1.2	Multi-Colored Interior Coating Systems																
			1.2	Qualification Statement																
			1.2	Multi-Colored Interior Coating Systems																

SUBMITTAL REGISTER
(ER 415 1-10)

CONTRACT NO.

TITLE AND LOCATION
Arvin Cadet Physical Development Center, Phase 2/3

CONTRACTOR

SPECIFICATION SECTION
10000

ACTIVITY NO a.	TRANSMITTAL NO. b.	ITEM NO c.	SPECIFICATION PARAGRAPH NUMBER d.	DESCRIPTION OF ITEM SUBMITTED e.	TYPE OF SUBMITTAL										CLASSIFICATION		REVIEWER r.	CONTRACTOR SCHEDULE DATES			CONTRACTOR ACTION		GOVERNMENT ACTION			REMARKS aa.
																		SUBMIT s.	APPROVAL NEEDED BY t.	MATERIAL NEEDED BY u.	CODE v.	DATE w.	SUBMIT TO GOVERNMENT x.	CODE y.	DATE z.	
			1.2	Wall Clocks	X											X										

ENG FORM 4288, Jul 96

SPECSINTACT

SUBMITTAL REGISTER
(ER 415 1-10)

CONTRACT NO.

TITLE AND LOCATION
Arvin Cadet Physical Development Center, Phase 2/3

CONTRACTOR

SPECIFICATION SECTION
10100

ACTIVITY NO	TRANSMITTAL NO.	ITEM NO	SPECIFICATION PARAGRAPH NUMBER	DESCRIPTION OF ITEM SUBMITTED	TYPE OF SUBMITTAL										CLASSIFICATION		REVIEWER	CONTRACTOR SCHEDULE DATES			CONTRACTOR ACTION		GOVERNMENT ACTION			
																		SUBMIT	APPROVAL NEEDED BY	MATERIAL NEEDED BY	CODE	DATE	SUBMIT TO GOVERNMENT	CODE	DATE	REMARKS
a.	b.	c.	d.	e.	f.	g.	h.	i.	j.	k.	l.	m.	n.	o.	p.	q.	r.	s.	t.	u.	v.	w.	x.	v.	z.	aa.
			1.3	Visual Display Boards												X										
			1.3	Shop Drawings												X										
			1.3	Visual Display Boards																						
			1.3	Visual Display Boards																						
			1.3	Aluminum								X				X										
			1.3	Porcelain Enamel								X				X										
			1.3	Materials								X				X										

SUBMITTAL REGISTER
(ER 415 1-10)

CONTRACT NO.

TITLE AND LOCATION
Arvin Cadet Physical Development Center, Phase 2/3

CONTRACTOR

SPECIFICATION SECTION
10160

ACTIVITY NO a.	TRANSMITTAL NO. b.	ITEM NO c.	SPECIFICATION PARAGRAPH NUMBER d.	DESCRIPTION OF ITEM SUBMITTED e.	TYPE OF SUBMITTAL										CLASSIFICATION (IF APPROVED) p.	GOVT APPROVED q.	REVIEWER r.	CONTRACTOR SCHEDULE DATES			CONTRACTOR ACTION		GOVERNMENT ACTION			REMARKS aa.
																		SUBMIT s.	APPROVAL NEEDED BY t.	MATERIAL NEEDED BY u.	CODE v.	DATE w.	SUBMIT TO GOVERNMENT x.	CODE y.	DATE z.	
			1.3	Toilet Partition System																					
			1.3	Toilet Partition System																					
			1.3	Toilet Partition System																					

SUBMITTAL REGISTER
(ER 415 1-10)

CONTRACT NO.

TITLE AND LOCATION: **Arvin Cadet Physical Development Center, Phase 2/3**

CONTRACTOR

SPECIFICATION SECTION: **10190**

ACTIVITY NO. a.	TRANS-MITTAL NO. b.	ITEM NO. c.	SPECIFICATION PARAGRAPH NUMBER d.	DESCRIPTION OF ITEM SUBMITTED e.	TYPE OF SUBMITTAL									CLASSIFICATION			CONTRACTOR SCHEDULE DATES			CONTRACTOR ACTION			GOVERNMENT ACTION		REMARKS aa.
						INS	STA	CERTI						INFORMATION	GO APPROVED	REVIEWER r.	SUBMIT s.	APPROVAL NEEDED BY t.	MATERIAL NEEDED BY u.	CODE v.	DATE w.	SUBMIT TO GOVERNMENT x.	CODE y.	DATE z.	
			1.2	Product Data	X										X										
			1.2	Cubicle Curtain Shop Drawings																					
			1.2	Cubicle Curtain Coordination Drawings																					
			1.2	Cubicle Schedule											X										
			1.2	Product Certificates																					
			1.2	Curtain Fabric							X														
			1.2	Mesh Top																					
			1.2	Curtain Track																					
			1.2	Curtain Carrier																					

SUBMITTAL REGISTER
(ER 415 1-10)

CONTRACT NO.

TITLE AND LOCATION: **Arvin Cadet Physical Development Center, Phase 2/3**

CONTRACTOR

SPECIFICATION SECTION: **10200**

ACTIVITY NO. a.	TRANS-MITTAL NO. b.	ITEM NO. c.	SPECIFICATION PARAGRAPH NUMBER d.	DESCRIPTION OF ITEM SUBMITTED e.	TYPE OF SUBMITTAL									CLASSIFICATION			CONTRACTOR SCHEDULE DATES			CONTRACTOR ACTION			GOVERNMENT ACTION		REMARKS aa.
						INS	STA	CERTI						INFORMATION	GO APPROVED	REVIEWER r.	SUBMIT s.	APPROVAL NEEDED BY t.	MATERIAL NEEDED BY u.	CODE v.	DATE w.	SUBMIT TO GOVERNMENT x.	CODE y.	DATE z.	
			1.2	Louvers	X										X										
			1.2	Finish	X										X										
			1.2	Louvers		X									X										
			1.2	Louvers							X				X										

SUBMITTAL REGISTER
(ER 415 1-10)

CONTRACT NO.

TITLE AND LOCATION: **Arvin Cadet Physical Development Center, Phase 2/3**

CONTRACTOR

SPECIFICATION SECTION: **10430**

ACTIVITY NO. a.	TRANS-MITTAL NO. b.	ITEM NO. c.	SPECIFICATION PARAGRAPH NUMBER d.	DESCRIPTION OF ITEM SUBMITTED e.	TYPE OF SUBMITTAL									CLASSIFICATION				CONTRACTOR SCHEDULE DATES			CONTRACTOR ACTION			GOVERNMENT ACTION		
						INS		STA		CERTI				INFORMATION	GO											
															APPROVED	REVIEWER r.	SUBMIT s.	APPROVAL NEEDED BY t.	MATERIAL NEEDED BY u.	CODE v.	DATE w.	SUBMIT TO GOVERNMENT x.	CODE y.	DATE z.	REMARKS aa.
			1.5	Exterior Signs											X											
			1.5	Exterior Signs											X											
			1.5	Exterior Signs										X												
			1.5	Exterior Signs				X							X											
			1.5	Exterior Signs, Initial Selection Samples																						
			1.5	Exterior Signs, Verification Samples																						
			1.5	Exterior Signs									X		X											
			1.5	Exterior Signs										X												

SUBMITTAL REGISTER
(ER 415 1-10)

CONTRACT NO.

TITLE AND LOCATION: **Arvin Cadet Physical Development Center, Phase 2/3**

CONTRACTOR

SPECIFICATION SECTION: **10440**

ACTIVITY NO. a.	TRANS-MITTAL NO. b.	ITEM NO. c.	SPECIFICATION PARAGRAPH NUMBER d.	DESCRIPTION OF ITEM SUBMITTED e.	TYPE OF SUBMITTAL: INS	STA	CERTI	CLASSIFICATION: INFORMATION	GO APPROVED g.	REVIEWER r.	CONTRACTOR SCHEDULE DATES: SUBMIT s.	APPROVAL NEEDED BY t.	MATERIAL NEEDED BY u.	CONTRACTOR ACTION: CODE v.	DATE w.	SUBMIT TO GOVERNMENT x.	GOVERNMENT ACTION: CODE y.	DATE z.	REMARKS aa.
			1.3	Interior Signage					X										
			1.3	Interior Signage					X										
			1.3	Interior Signage, Initial Selection Samples															
			1.3	Interior Signage, Verification Samples															
			1.3	Interior Signage				X	X										

SUBMITTAL REGISTER
(ER 415 1-10)

CONTRACT NO.

TITLE AND LOCATION: **Arvin Cadet Physical Development Center, Phase 2/3**

CONTRACTOR

SPECIFICATION SECTION: **10500**

ACTIVITY NO. a.	TRANS-MITTAL NO. b.	ITEM NO. c.	SPECIFICATION PARAGRAPH NUMBER d.	DESCRIPTION OF ITEM SUBMITTED e.	TYPE OF SUBMITTAL: INS	STA	CERTI	CLASSIFICATION: INFORMATION	GO APPROVED	REVIEWER r.	CONTRACTOR SCHEDULE DATES: SUBMIT s.	APPROVAL NEEDED BY t.	MATERIAL NEEDED BY u.	CONTRACTOR ACTION: CODE v.	DATE w.	SUBMIT TO GOVERNMENT x.	GOVERNMENT ACTION: CODE y.	DATE z.	REMARKS aa.
			1.1	Lockers	X				X										
			1.1	Lockers		X			X										
			1.1	Lockers			X		X										

SUBMITTAL REGISTER
(ER 415 1-10)

CONTRACT NO.

TITLE AND LOCATION: **Arvin Cadet Physical Development Center, Phase 2/3**

CONTRACTOR

SPECIFICATION SECTION: **10520**

ACTIVITY NO. a.	TRANS-MITTAL NO. b.	ITEM NO. c.	SPECIFICATION PARAGRAPH NUMBER d.	DESCRIPTION OF ITEM SUBMITTED e.	TYPE OF SUBMITTAL: INS	STA	CERTI	CLASSIFICATION: INFORMATION	GO APPROVED	REVIEWER r.	CONTRACTOR SCHEDULE DATES: SUBMIT s.	APPROVAL NEEDED BY t.	MATERIAL NEEDED BY u.	CONTRACTOR ACTION: CODE v.	DATE w.	SUBMIT TO GOVERNMENT x.	GOVERNMENT ACTION: CODE y.	DATE z.	REMARKS aa.
			1.2	Fire Extinguisher Cabinets															
			1.2	Fire Extinguishers					X										
			1.2	Finish Metals			X		X										

SUBMITTAL REGISTER
(ER 415 1-10)

CONTRACT NO.

TITLE AND LOCATION: **Arvin Cadet Physical Development Center, Phase 2/3**

CONTRACTOR

SPECIFICATION SECTION: **10605**

ACTIVITY NO. a.	TRANS-MITTAL NO. b.	ITEM NO. c.	SPECIFICATION PARAGRAPH NUMBER d.	DESCRIPTION OF ITEM SUBMITTED e.	TYPE OF SUBMITTAL	CLASSIFICATION			CONTRACTOR SCHEDULE DATES			CONTRACTOR ACTION			GOVERNMENT ACTION		REMARKS aa.
						INFORMATION ONLY p.	GO APPROVED q.	REVIEWER r.	SUBMIT s.	APPROVAL NEEDED BY t.	MATERIAL NEEDED BY u.	CODE v.	DATE w.	SUBMIT TO GOVERNMENT x.	CODE y.	DATE z.	
			1.1	Product Data	X		X										
			1.1	Shop Drawings			X										
			1.1	Color Samples			X										

SUBMITTAL REGISTER
(ER 415 1-10)

CONTRACT NO.

TITLE AND LOCATION: **Arvin Cadet Physical Development Center, Phase 2/3**

CONTRACTOR

SPECIFICATION SECTION: **10800**

ACTIVITY NO. a.	TRANS-MITTAL NO. b.	ITEM NO. c.	SPECIFICATION PARAGRAPH NUMBER d.	DESCRIPTION OF ITEM SUBMITTED e.	TYPE OF SUBMITTAL: INS	STA	CERTI	CLASSIFICATION: INFORMATION	GO APPROVED g.	REVIEWER r.	CONTRACTOR SCHEDULE DATES: SUBMIT s.	APPROVAL NEEDED BY t.	MATERIAL NEEDED BY u.	CONTRACTOR ACTION: CODE v.	DATE w.	SUBMIT TO GOVERNMENT x.	GOVERNMENT ACTION: CODE y.	DATE z.	REMARKS aa.
			2.1.2	Finishes	X				X										
			2.2	Accessory Items					X										
			2.1.2	Finishes			X		X										
			2.2	Accessory Items			X		X										
			1.1	Electric Hand Dryer					X										

SUBMITTAL REGISTER
(ER 415 1-10)

CONTRACT NO.

TITLE AND LOCATION: **Arvin Cadet Physical Development Center, Phase 2/3**

CONTRACTOR

SPECIFICATION SECTION: **11211**

ACTIVITY NO. a.	TRANS-MITTAL NO. b.	ITEM NO. c.	SPECIFICATION PARAGRAPH NUMBER d.	DESCRIPTION OF ITEM SUBMITTED e.	TYPE OF SUBMITTAL: INS	STA	CERTI	CLASSIFICATION: INFORMATION	GO APPROVED	REVIEWER r.	CONTRACTOR SCHEDULE DATES: SUBMIT s.	APPROVAL NEEDED BY t.	MATERIAL NEEDED BY u.	CONTRACTOR ACTION: CODE v.	DATE w.	SUBMIT TO GOVERNMENT x.	GOVERNMENT ACTION: CODE y.	DATE z.	REMARKS aa.
			2.1	Materials and Equipment															
			1.3	Centrifugal Pump System															
			1.3	Centrifugal Pump System															
			1.3	Training	X				X										
			3.2	Tests			X	X											
			1.3	Manufacturer's Field Representative															
			1.3	Centrifugal Pump System															

SUBMITTAL REGISTER
(ER 415 1-10)

CONTRACT NO.

TITLE AND LOCATION: **Arvin Cadet Physical Development Center, Phase 2/3**

CONTRACTOR

SPECIFICATION SECTION: **11310**

ACTIVITY NO. a.	TRANS-MITTAL NO. b.	ITEM NO. c.	SPECIFICATION PARAGRAPH NUMBER d.	DESCRIPTION OF ITEM SUBMITTED e.	TYPE OF SUBMITTAL										CLASSIFICATION			CONTRACTOR SCHEDULE DATES			CONTRACTOR ACTION			GOVERNMENT ACTION		REMARKS aa.
						INS	STA	CERTI							INFORMATION	GO APPROVED	REVIEWER r.	SUBMIT s.	APPROVAL NEEDED BY t.	MATERIAL NEEDED BY u.	CODE v.	DATE w.	SUBMIT TO GOVERNMENT x.	CODE y.	DATE z.	
			1.2	Sewage and Sludge Pump System																						
			1.2	Spare Parts	X											X										
			1.2	Sewage and Sludge Pump System																						
			1.2	Sewage and Sludge Pump System																						
			3.3	Field Testing and Adjusting Equipment																						
			1.2	Sewage and Sludge Pump System																						

SUBMITTAL REGISTER
(ER 415 1-10)

CONTRACT NO.

TITLE AND LOCATION: **Arvin Cadet Physical Development Center, Phase 2/3**

CONTRACTOR

SPECIFICATION SECTION: **11480**

ACTIVITY NO. a.	TRANS-MITTAL NO. b.	ITEM NO. c.	SPECIFICATION PARAGRAPH NUMBER d.	DESCRIPTION OF ITEM SUBMITTED e.	TYPE OF SUBMITTAL										CLASSIFICATION			CONTRACTOR SCHEDULE DATES			CONTRACTOR ACTION			GOVERNMENT ACTION		
						INS		STA		CERTI					INFORMATION	GO APPROVED	REVIEWER	SUBMIT	APPROVAL NEEDED BY	MATERIAL NEEDED BY	CODE	DATE	SUBMIT TO GOVERNMENT	CODE	DATE	REMARKS
			1.2	Basketball Equipment												X										
			1.2	Divider Curtains												X										
			1.2	Wall Padding	X											X										
			1.2	Volleyball Standards												X										
			1.2	Wrestling Mats												X										
			1.2	Boxing Rings	X											X										
			1.2	Chinning Bars												X										
			1.2	Boxing Equipment												X										
			1.2	Basketball Equipment												X										
			1.2	Divider Curtains												X										
			1.2	Wall Padding		X										X										
			1.2	Volleyball Standards												X										
			1.2	Wrestling Mats												X										
			1.2	Boxing Rings		X										X										
			1.2	Chinning Bars												X										
			1.2	Boxing Equipment												X										
			1.2	Supplemental Framing												X										
			1.2	Wall Padding							X					X										
			1.2	Divider Curtains							X					X										
			1.2	Divider Curtain Material																						
			1.2	Padding Material								X				X										
			1.2	Operation, Maintenance, and Cleaning Instructions																						

SUBMITTAL REGISTER
(ER 415 1-10)

CONTRACT NO.

TITLE AND LOCATION: **Arvin Cadet Physical Development Center, Phase 2/3**

CONTRACTOR

SPECIFICATION SECTION: **11482**

ACTIVITY NO. a.	TRANS-MITTAL NO. b.	ITEM NO. c.	SPECIFICATION PARAGRAPH NUMBER d.	DESCRIPTION OF ITEM SUBMITTED e.	TYPE OF SUBMITTAL: INS	STA	CERTI	CLASSIFICATION: INFORMATION ONLY p.	GO APPROVED q.	REVIEWER r.	CONTRACTOR SCHEDULE DATES: SUBMIT s.	APPROVAL NEEDED BY t.	MATERIAL NEEDED BY u.	CONTRACTOR ACTION: CODE v.	DATE w.	SUBMIT TO GOVERNMENT x.	GOVERNMENT ACTION: CODE y.	DATE z.	REMARKS aa.
			1.2	Scoreboard Systems					X										
			1.2	Scoreboard Systems					X										
			1.2	Scoreboard Systems				X											

SUBMITTAL REGISTER
(ER 415 1-10)

CONTRACT NO.

TITLE AND LOCATION: **Arvin Cadet Physical Development Center, Phase 2/3**

CONTRACTOR

SPECIFICATION SECTION: **11491**

ACTIVITY NO. a.	TRANS-MITTAL NO. b.	ITEM NO. c.	SPECIFICATION PARAGRAPH NUMBER d.	DESCRIPTION OF ITEM SUBMITTED e.	TYPE OF SUBMITTAL									CLASSIFICATION			CONTRACTOR SCHEDULE DATES			CONTRACTOR ACTION			GOVERNMENT ACTION		REMARKS aa.
						INS	STA	CERTI						INFORMATION	GO APPROVED	REVIEWER r.	SUBMIT s.	APPROVAL NEEDED BY t.	MATERIAL NEEDED BY u.	CODE v.	DATE w.	SUBMIT TO GOVERNMENT x.	CODE y.	DATE z.	
			1.1	Product Data	X										X										
			1.1	Shop Drawings											X										
			1.1	Panel Samples							X				X										

SUBMITTAL REGISTER
(ER 415 1-10)

CONTRACT NO.

TITLE AND LOCATION: **Arvin Cadet Physical Development Center, Phase 2/3**

CONTRACTOR

SPECIFICATION SECTION: **12600**

ACTIVITY NO. a.	TRANS-MITTAL NO. b.	ITEM NO. c.	SPECIFICATION PARAGRAPH NUMBER d.	DESCRIPTION OF ITEM SUBMITTED e.	TYPE OF SUBMITTAL: INS	STA	CERTI	CLASSIFICATION: INFORMATION	GO APPROVED g.	REVIEWER r.	CONTRACTOR SCHEDULE DATES: SUBMIT s.	APPROVAL NEEDED BY t.	MATERIAL NEEDED BY u.	CONTRACTOR ACTION: CODE v.	DATE w.	SUBMIT TO GOVERNMENT x.	GOVERNMENT ACTION: CODE y.	DATE z.	REMARKS aa.
			1.2	Theater Chairs					X										
			1.2	Theater Chairs					X										
			1.2	Theater Chairs			X		X										

SUBMITTAL REGISTER
(ER 415 1-10)

CONTRACT NO.

TITLE AND LOCATION
Arvin Cadet Physical Development Center, Phase 2/3

CONTRACTOR

SPECIFICATION SECTION
12690

ACTIVITY NO a.	TRANSMITTAL NO. b.	ITEM NO c.	SPECIFICATION PARAGRAPH NUMBER d.	DESCRIPTION OF ITEM SUBMITTED e.	TYPE OF SUBMITTAL: INSTA	CERTI	CLASSIFICATION: INFORMA	APPROVED g.	REVIEWER r.	CONTRACTOR SCHEDULE DATES: SUBMIT s.	APPROVAL NEEDED BY t.	MATERIAL NEEDED BY u.	CONTRACTOR ACTION: CODE v.	DATE w.	SUBMIT TO GOVERNMENT x.	GOVERNMENT ACTION: CODE y.	DATE z.	REMARKS aa.
			1.2	Product Data	X			X										
			1.2	Shop Drawings				X										
			1.2	Initial Selection Samples														

SUBMITTAL REGISTER
(ER 415 1-10)

CONTRACT NO.

TITLE AND LOCATION: **Arvin Cadet Physical Development Center, Phase 2/3**

CONTRACTOR

SPECIFICATION SECTION: **12765**

ACTIVITY NO. a.	TRANS-MITTAL NO. b.	ITEM NO. c.	SPECIFICATION PARAGRAPH NUMBER d.	DESCRIPTION OF ITEM SUBMITTED e.	TYPE OF SUBMITTAL									CLASSIFICATION			CONTRACTOR SCHEDULE DATES			CONTRACTOR ACTION			GOVERNMENT ACTION		
						INS	STA	CERTI						INFORMATION	GO APPROVED	REVIEWER r.	SUBMIT s.	APPROVAL NEEDED BY t.	MATERIAL NEEDED BY u.	CODE v.	DATE w.	SUBMIT TO GOVERNMENT x.	CODE y.	DATE z.	REMARKS aa.
			1.2	Bleachers	X										X										
			1.2	Bleachers		X									X										
			1.2	Wood Seats							X				X										
			1.2	Aluminum Seat							X				X										

SUBMITTAL REGISTER
(ER 415 1-10)

CONTRACT NO.

TITLE AND LOCATION: **Arvin Cadet Physical Development Center, Phase 2/3**

CONTRACTOR

SPECIFICATION SECTION: **13080**

ACTIVITY NO. a.	TRANS-MITTAL NO. b.	ITEM NO. c.	SPECIFICATION PARAGRAPH NUMBER d.	DESCRIPTION OF ITEM SUBMITTED e.	TYPE OF SUBMITTAL: INS	STA	CERTI	CLASSIFICATION: INFORMATION	GO APPROVED g.	REVIEWER r.	CONTRACTOR SCHEDULE DATES: SUBMIT s.	APPROVAL NEEDED BY t.	MATERIAL NEEDED BY u.	CONTRACTOR ACTION: CODE v.	DATE w.	SUBMIT TO GOVERNMENT x.	GOVERNMENT ACTION: CODE y.	DATE z.	REMARKS aa.
			3.1	Bracing and Coupling					X										
			3.13	Lighting Fixtures in Buildings															
			3.12	Miscellaneous Equipment															
			3.1	Bracing and Coupling					X										
			3.3	Flexible Couplings or Joints															
			3.7	Resilient Vibration Isolation Devices															
			1.3	Bridge Cranes and Monorails															
			3.13	Lighting Fixtures in Buildings															
			3.12	Miscellaneous Equipment															
			2.1.3.1	Flexible Ball Joints					X										

SUBMITTAL REGISTER
(ER 415 1-10)

CONTRACT NO.

TITLE AND LOCATION: **Arvin Cadet Physical Development Center, Phase 2/3**

CONTRACTOR

SPECIFICATION SECTION: **13100**

ACTIVITY NO. a.	TRANS-MITTAL NO. b.	ITEM NO. c.	SPECIFICATION PARAGRAPH NUMBER d.	DESCRIPTION OF ITEM SUBMITTED e.	TYPE OF SUBMITTAL: INS	STA	CERTI	CLASSIFICATION: INFORMATION ONLY p.	GO APPROVED q.	REVIEWER r.	CONTRACTOR SCHEDULE DATES: SUBMIT s.	APPROVAL NEEDED BY t.	MATERIAL NEEDED BY u.	CONTRACTOR ACTION: CODE v.	DATE w.	SUBMIT TO GOVERNMENT x.	GOVERNMENT ACTION: CODE y.	DATE z.	REMARKS aa.
			1.3	Lightning Protection System															
			1.3	Materials and Equipment															

SUBMITTAL REGISTER
(ER 415 1-10)

CONTRACT NO.

TITLE AND LOCATION: **Arvin Cadet Physical Development Center, Phase 2/3**

CONTRACTOR

SPECIFICATION SECTION: **13150**

ACTIVITY NO. a.	TRANS-MITTAL NO. b.	ITEM NO. c.	SPECIFICATION PARAGRAPH NUMBER d.	DESCRIPTION OF ITEM SUBMITTED e.	TYPE OF SUBMITTAL: INS	STA	CERTI	CLASSIFICATION: INFORMATION	GO	APPROVED	REVIEWER r.	CONTRACTOR SCHEDULE DATES: SUBMIT s.	APPROVAL NEEDED BY t.	MATERIAL NEEDED BY u.	CONTRACTOR ACTION: CODE v.	DATE w.	SUBMIT TO GOVERNMENT x.	GOVERNMENT ACTION: CODE y.	DATE z.	REMARKS aa.
			1.3	Contractor Qualifications and Responsibilities																

SUBMITTAL REGISTER
(ER 415 1-10)

CONTRACT NO.

TITLE AND LOCATION: **Arvin Cadet Physical Development Center, Phase 2/3**

CONTRACTOR

SPECIFICATION SECTION: **13153**

ACTIVITY NO. a.	TRANS-MITTAL NO. b.	ITEM NO. c.	SPECIFICATION PARAGRAPH NUMBER d.	DESCRIPTION OF ITEM SUBMITTED e.	TYPE OF SUBMITTAL									CLASSIFICATION			REVIEWER r.	CONTRACTOR SCHEDULE DATES			CONTRACTOR ACTION			GOVERNMENT ACTION		REMARKS aa.
						INS		STA		CERTI				INFORMATION		GO APPROVED		SUBMIT s.	APPROVAL NEEDED BY t.	MATERIAL NEEDED BY u.	CODE v.	DATE w.	SUBMIT TO GOVERNMENT x.	CODE y.	DATE z.	
			1.2	Pipe	X											X										
			1.2	Fittings	X											X										
			1.2	Valves, each type												X										
			1.2	Piping specialties												X										
			1.2	Sand Filters	X											X										
			1.2	Pumps, each type												X										
			1.2	Pump Strainers												X										
			1.2	Inlet Filters and Outlet Grates																						
			1.2	Chemical Control Monitors																						
			1.2	Chlorine Feed Systems												X										
			1.2	Acid Feed Systems												X										
			1.2	Instrumentation and Controls																						
			1.2	Probe Sensors												X										
			1.2	Chemicals	X											X										
			1.2	Emergency Shower and Eyewash																						
			1.2	Coordination Drawings																						
			1.2	Filter Media								X				X										
			1.2	Sand Filters										X		X										
			1.2	Pumps, Each Type										X		X										
			1.2	Chemical Control Monitor																						
			1.2	Chlorine Feed Systems												X										
			1.2	Acid Feed Systems										X		X										
			1.2	All Controls										X		X										

SUBMITTAL REGISTER
(ER 415 1-10)

CONTRACT NO.

TITLE AND LOCATION: **Arvin Cadet Physical Development Center, Phase 2/3**

CONTRACTOR

SPECIFICATION SECTION: **13154**

ACTIVITY NO. a.	TRANS-MITTAL NO. b.	ITEM NO. c.	SPECIFICATION PARAGRAPH NUMBER d.	DESCRIPTION OF ITEM SUBMITTED e.	TYPE OF SUBMITTAL										CLASSIFICATION			CONTRACTOR SCHEDULE DATES			CONTRACTOR ACTION			GOVERNMENT ACTION		REMARKS aa.
						INS	STA	CERTI							INFORMATION	GO APPROVED	REVIEWER r.	SUBMIT s.	APPROVAL NEEDED BY t.	MATERIAL NEEDED BY u.	CODE v.	DATE w.	SUBMIT TO GOVERNMENT x.	CODE y.	DATE z.	
			1.2	Handrails	X											X										
			1.2	Grab Rails	X											X										
			1.2	Recessed Steps												X										
			1.2	Wall Anchors	X											X										
			1.2	Stanchion Posts and Sockets																						
			1.2	Concrete-Filled Access Covers																						
			1.2	Disabled Access Lift and Socket																						
			1.2	Racing Lanes and Reels																						
			1.2	Outdoor Pool Cover												X										
			1.2	Portable Vacuum												X										
			1.2	Underwater Lights												X										
			1.2	Pool Water Testing Kit																						
			1.2	Safety Equipment												X										
			1.2	Stating Platform and Anchors																						
			1.2	Water Polo Goals												X										
			1.2	Floating Water Polo Goals																						
			1.2	Reacall Rope	X											X										
			1.2	Electrical Loads												X										

SUBMITTAL REGISTER
(ER 415 1-10)

CONTRACT NO.

TITLE AND LOCATION: **Arvin Cadet Physical Development Center, Phase 2/3**

CONTRACTOR

SPECIFICATION SECTION: **13158**

ACTIVITY NO. a.	TRANS-MITTAL NO. b.	ITEM NO. c.	SPECIFICATION PARAGRAPH NUMBER d.	DESCRIPTION OF ITEM SUBMITTED e.	TYPE OF SUBMITTAL: INS	STA	CERTI	CLASSIFICATION: INFORMATION	GO APPROVED	REVIEWER r.	CONTRACTOR SCHEDULE DATES: SUBMIT s.	APPROVAL NEEDED BY t.	MATERIAL NEEDED BY u.	CONTRACTOR ACTION: CODE v.	DATE w.	SUBMIT TO GOVERNMENT x.	GOVERNMENT ACTION: CODE y.	DATE z.	REMARKS aa.
			1.2	Hydrotherapy Pools					X										
			1.2	Hydrotherapy Pools					X										
			1.2	Hydrotherapy Pools				X											

SUBMITTAL REGISTER
(ER 415 1-10)

CONTRACT NO.

TITLE AND LOCATION
Arvin Cadet Physical Development Center, Phase 2/3

CONTRACTOR

SPECIFICATION SECTION
13851

ACTIVITY NO a.	TRANSMITTAL NO. b.	ITEM NO c.	SPECIFICATION PARAGRAPH NUMBER d.	DESCRIPTION OF ITEM SUBMITTED e.	TYPE OF SUBMITTAL: INS f.	STA g.	CERT h.	CO & MAN i.	CLASSIFICATION: INFORM o.	APPROVED p.	GOVT APPROVED q.	REVIEWER r.	CONTRACTOR SCHEDULE DATES: SUBMIT s.	APPROVAL NEEDED BY t.	MATERIAL NEEDED BY u.	CONTRACTOR ACTION: CODE v.	DATE w.	SUBMIT TO GOVERNMENT x.	GOVERNMENT ACTION: CODE y.	DATE z.	REMARKS aa.
			2.1	Storage Batteries							X										
			1.5	Voltage Drop	X						X										
			1.5	Spare Parts	X						X										
			1.4	Technical Data and Computer																	
				Software																	
			1.5	Fire Alarm Reporting System																	
			3.5	Training		X				X											
			3.4	Testing			X			X											
			3.4	Testing				X		X											
			1.5	Equipment					X	X											
			1.5	Licenses and Proprietary Information																	
			1.2.7	Qualifications					X	X											
			1.4	Technical Data and Computer																	
				Software																	

SUBMITTAL REGISTER
(ER 415 1-10)

CONTRACT NO.

TITLE AND LOCATION
Arvin Cadet Physical Development Center, Phase 2/3

CONTRACTOR

SPECIFICATION SECTION
13852

ACTIVITY NO a.	TRANSMITTAL NO. b.	ITEM NO c.	SPECIFICATION PARAGRAPH NUMBER d.	DESCRIPTION OF ITEM SUBMITTED e.	TYPE OF SUBMITTAL								CLASSIFICATION		REVIEWER r.	CONTRACTOR SCHEDULE DATES			CONTRACTOR ACTION		GOVERNMENT ACTION			REMARKS aa.
																SUBMIT s.	APPROVAL NEEDED BY t.	MATERIAL NEEDED BY u.	CODE v.	DATE w.	SUBMIT TO GOVERNMENT x.	CODE y.	DATE z.	
			1.3	Battery	X									X										
			1.3	Spare Parts	X								X											
			1.3	Qualifications										X										
			1.3	Fire Alarm Reporting System																				
			1.3	Wiring Diagrams										X										
			1.3	Fire Alarm Reporting System																				
			1.3	G		X																		
			1.3	Training		X							X											
			1.3	Test Procedures				X						X										
			3.3	Testing					X				X											
			1.3	Equipment						X			X											

SUBMITTAL REGISTER
(ER 415 1-10)

CONTRACT NO.

TITLE AND LOCATION: **Arvin Cadet Physical Development Center, Phase 2/3**

CONTRACTOR

SPECIFICATION SECTION: **13930**

ACTIVITY NO. a.	TRANS-MITTAL NO. b.	ITEM NO. c.	SPECIFICATION PARAGRAPH NUMBER d.	DESCRIPTION OF ITEM SUBMITTED e.	TYPE OF SUBMITTAL									CLASSIFICATION			CONTRACTOR SCHEDULE DATES			CONTRACTOR ACTION			GOVERNMENT ACTION		REMARKS aa.
						INS	STA	CERTI						INFORMATION	GO APPROVED	REVIEWER r.	SUBMIT s.	APPROVAL NEEDED BY t.	MATERIAL NEEDED BY u.	CODE v.	DATE w.	SUBMIT TO GOVERNMENT x.	CODE y.	DATE z.	
			1.3	Load Calculations for Sizing Sway Bracing																					
			1.3	Sprinkler System Equipment																					
			1.4	Hydraulic Calculations																					
			1.3	Spare Parts	X										X										
			1.3	Sprinkler System Shop Drawings																					
			1.3	Coordination Drawings																					
			1.3	As-Built Drawings										X											
			1.3	Test Procedures											X										
			1.3	Preliminary Tests											X										
			1.3	Final Test			X								X										
			1.6	Installer Qualifications																					
			1.5	Submittal Preparer's Qualifications																					
			1.3	Contractor's Material & Test Certificates																					
			1.3	Sprinkler System									X		X										

SUBMITTAL REGISTER
(ER 415 1-10)

CONTRACT NO.

TITLE AND LOCATION: **Arvin Cadet Physical Development Center, Phase 2/3**

CONTRACTOR

SPECIFICATION SECTION: **14210**

ACTIVITY NO. a.	TRANS-MITTAL NO. b.	ITEM NO. c.	SPECIFICATION PARAGRAPH NUMBER d.	DESCRIPTION OF ITEM SUBMITTED e.	TYPE OF SUBMITTAL: INS	STA	CERTI	CLASSIFICATION: INFORMATION	GO APPROVED	REVIEWER r.	CONTRACTOR SCHEDULE DATES: SUBMIT s.	APPROVAL NEEDED BY t.	MATERIAL NEEDED BY u.	CONTRACTOR ACTION: CODE v.	DATE w.	SUBMIT TO GOVERNMENT x.	GOVERNMENT ACTION: CODE y.	DATE z.	REMARKS aa.
			1.2	Training Data							X								
			1.2	Elevator System								X							
			1.2	Elevator System								X							
			3.6	Framed Instructions							X								
			1.2	Qualification Certificates															
			3.5	Testing			X				X								
			1.2	Finishes				X				X							
			1.2	Test Procedures					X			X							
			1.2	Elevator System						X		X							

SUBMITTAL REGISTER
(ER 415 1-10)

CONTRACT NO.

TITLE AND LOCATION
Arvin Cadet Physical Development Center, Phase 2/3

CONTRACTOR

SPECIFICATION SECTION
15080

ACTIVITY NO a.	TRANSMITTAL NO. b.	ITEM NO c.	SPECIFICATION PARAGRAPH NUMBER d.	DESCRIPTION OF ITEM SUBMITTED e.	TYPE OF SUBMITTAL										CLASSIFICATION (IF APPROVED) p.	GOVT APPROVED q.	REVIEWER r.	CONTRACTOR SCHEDULE DATES			CONTRACTOR ACTION		GOVERNMENT ACTION			REMARKS aa.
																		SUBMIT s.	APPROVAL NEEDED BY t.	MATERIAL NEEDED BY u.	CODE v.	DATE w.	SUBMIT TO GOVERNMENT x.	CODE y.	DATE z.	
			1.4	Thermal Insulation Materials																					

SUBMITTAL REGISTER
(ER 415 1-10)

CONTRACT NO.

TITLE AND LOCATION: **Arvin Cadet Physical Development Center, Phase 2/3**

CONTRACTOR

SPECIFICATION SECTION: **15400**

ACTIVITY NO. a.	TRANS-MITTAL NO. b.	ITEM NO. c.	SPECIFICATION PARAGRAPH NUMBER d.	DESCRIPTION OF ITEM SUBMITTED e.	TYPE OF SUBMITTAL: INS	STA	CERTI	CLASSIFICATION: INFORMATION	GO APPROVED	REVIEWER r.	CONTRACTOR SCHEDULE DATES: SUBMIT s.	APPROVAL NEEDED BY t.	MATERIAL NEEDED BY u.	CONTRACTOR ACTION: CODE v.	DATE w.	SUBMIT TO GOVERNMENT x.	GOVERNMENT ACTION: CODE y.	DATE z.	REMARKS aa.
			1.5	Welding	X			X											
			3.4	Vibration-Absorbing Features															
			1.5	Plumbing System					X										
			1.5	Electrical Schematics					X										
			1.5	Coordination Drawings															
			1.5	Plumbing System					X										
			3.8	Tests, Flushing and Disinfection															
			1.5	Backflow Prevention Assembly Tests															
			1.5	Materials and Equipment															
			1.5	Bolts			X		X										
			1.5	Plumbing System				X	X										

SUBMITTAL REGISTER
(ER 415 1-10)

CONTRACT NO.

TITLE AND LOCATION
Arvin Cadet Physical Development Center, Phase 2/3

CONTRACTOR

SPECIFICATION SECTION
15556

ACTIVITY NO a.	TRANSMITTAL NO. b.	ITEM NO c.	SPECIFICATION PARAGRAPH NUMBER d.	DESCRIPTION OF ITEM SUBMITTED e.	TYPE OF SUBMITTAL: INSTA	CERTI	CLASSIFICATION: INFORMA	APPROVED g.	REVIEWER r.	CONTRACTOR SCHEDULE DATES: SUBMIT s.	APPROVAL NEEDED BY t.	MATERIAL NEEDED BY u.	CONTRACTOR ACTION: CODE v.	DATE w.	SUBMIT TO GOVERNMENT x.	GOVERNMENT ACTION: CODE y.	DATE z.	REMARKS aa.
			1.2	Spare Parts	X			X										
			1.2	Welding Procedures and Qualifications														
			1.2	Heating System				X										
			1.2	Heating System Coordination Drawings														
			3.20	Framed Instructions			X											
			1.2	Performance Tests				X										
			1.2	Water Treatment Tests														
			1.2	Bolts		X	X											
			1.2	Heating System			X											

SUBMITTAL REGISTER
(ER 415 1-10)

CONTRACT NO.

TITLE AND LOCATION: **Arvin Cadet Physical Development Center, Phase 2/3**

CONTRACTOR

SPECIFICATION SECTION: **15562**

ACTIVITY NO. a.	TRANS-MITTAL NO. b.	ITEM NO. c.	SPECIFICATION PARAGRAPH NUMBER d.	DESCRIPTION OF ITEM SUBMITTED e.	TYPE OF SUBMITTAL										CLASSIFICATION			CONTRACTOR SCHEDULE DATES			CONTRACTOR ACTION			GOVERNMENT ACTION		REMARKS aa.
						INS	STA	CERTI							INFORMATION	GO APPROVED	REVIEWER r.	SUBMIT s.	APPROVAL NEEDED BY t.	MATERIAL NEEDED BY u.	CODE v.	DATE w.	SUBMIT TO GOVERNMENT x.	CODE y.	DATE z.	
			1.2.6	Welding	X											X										
			1.3	Heating and Utilities System																						
			1.3	Heating and Utilities System																						
			1.3	Pipe Anchors		X										X										
			1.3	Framed Instructions											X											
			1.3	Coordination Drawings																						
			1.3	Adjusting, Balancing, Testing and Inspection																						
			1.3	Heating and Utilities System																						

SUBMITTAL REGISTER
(ER 415 1-10)

CONTRACT NO.

TITLE AND LOCATION: **Arvin Cadet Physical Development Center, Phase 2/3**

CONTRACTOR

SPECIFICATION SECTION: **15650**

ACTIVITY NO. a.	TRANS-MITTAL NO. b.	ITEM NO. c.	SPECIFICATION PARAGRAPH NUMBER d.	DESCRIPTION OF ITEM SUBMITTED e.	TYPE OF SUBMITTAL									CLASSIFICATION			CONTRACTOR SCHEDULE DATES			CONTRACTOR ACTION			GOVERNMENT ACTION		
						INS	STA	CERTI						INFORMATION	GO APPROVED	REVIEWER r.	SUBMIT s.	APPROVAL NEEDED BY t.	MATERIAL NEEDED BY u.	CODE v.	DATE w.	SUBMIT TO GOVERNMENT x.	CODE y.	DATE z.	REMARKS aa.
			1.3	Central Refrigerated Air-Conditioning System																					
			2.8	Water Treatment Systems																					
			1.3	Spare Parts	X									X											
			1.4	Qualifications										X											
			1.3	Central Refrigerated Air-Conditioning System																					
			1.3	Coordination Drawings																					
			1.3	Posted Instructions										X											
			2.11	Factory Tests			X							X											
			3.2	Tests			X							X											
			3.6	Demonstrations			X							X											
			1.7.1	Verification of Dimensions																					
			2.11	Factory Tests					X						X										
			3.2.1	Field Tests					X						X										
			3.2.2	System Performance Tests																					
			3.2.3	Condenser Water Quality Tests																					
			3.3	Inspections					X					X											
			1.3	Central Refrigerated Air-Conditioning System																					
			1.3	Operation Manual									X		X										
			1.3	Maintenance Manual									X		X										
			1.3	Water Treatment System																					

SUBMITTAL REGISTER
(ER 415 1-10)

CONTRACT NO.

TITLE AND LOCATION: **Arvin Cadet Physical Development Center, Phase 2/3**

CONTRACTOR

SPECIFICATION SECTION: **15895**

ACTIVITY NO. a.	TRANS-MITTAL NO. b.	ITEM NO. c.	SPECIFICATION PARAGRAPH NUMBER d.	DESCRIPTION OF ITEM SUBMITTED e.	TYPE OF SUBMITTAL: INS	STA	CERTI	CLASSIFICATION: INFORMATION	GO APPROVED	REVIEWER r.	CONTRACTOR SCHEDULE DATES: SUBMIT s.	APPROVAL NEEDED BY t.	MATERIAL NEEDED BY u.	CONTRACTOR ACTION: CODE v.	DATE w.	SUBMIT TO GOVERNMENT x.	GOVERNMENT ACTION: CODE y.	DATE z.	REMARKS aa.
			1.4	Components and Equipment Data															
			1.4	Air Supply, Distribution, Ventilation, and Exhaust Equipment															
			1.4	Coordination Drawings															
			1.4	Test Procedures					X										
			1.4	Welding Procedures				X											
			1.4	System Diagrams					X										
			1.4	Test Schedules		X		X											
			1.4	Field Training Schedule															
			1.4	Similar Services				X											
			1.4	Welding Qualification															
			1.4	Test Reports			X		X										
			1.4	Bolts			X	X											
			1.4	Air Supply, Distribution, Ventilation, and Exhaust Manuals															

SUBMITTAL REGISTER
(ER 415 1-10)

CONTRACT NO.

TITLE AND LOCATION: **Arvin Cadet Physical Development Center, Phase 2/3**

CONTRACTOR

SPECIFICATION SECTION: **15951**

ACTIVITY NO. a.	TRANS-MITTAL NO. b.	ITEM NO. c.	SPECIFICATION PARAGRAPH NUMBER d.	DESCRIPTION OF ITEM SUBMITTED e.	TYPE OF SUBMITTAL: INS	STA	CERTI	CLASSIFICATION: INFORMATION	GO APPROVED	REVIEWER r.	CONTRACTOR SCHEDULE DATES: SUBMIT s.	APPROVAL NEEDED BY t.	MATERIAL NEEDED BY u.	CONTRACTOR ACTION: CODE v.	DATE w.	SUBMIT TO GOVERNMENT x.	GOVERNMENT ACTION: CODE y.	DATE z.	REMARKS aa.
			1.3	Equipment Compliance Booklet															
			1.3	HVAC Control System					X										
			1.3	Commissioning Procedures															
			1.3	Performance Verification Test Procedures															
			1.3	Training Course Materials															
			1.3	Commissioning Report					X										
			1.3	Performance Verification Test Report															
			1.3	Service Organizations															
			1.3	Operation Manual				X	X										
			1.3	Maintenance and Repair Manual															

SUBMITTAL REGISTER
(ER 415 1-10)

CONTRACT NO.

TITLE AND LOCATION
Arvin Cadet Physical Development Center, Phase 2/3

CONTRACTOR

SPECIFICATION SECTION
15990

ACTIVITY NO a.	TRANSMITTAL NO. b.	ITEM NO c.	SPECIFICATION PARAGRAPH NUMBER d.	DESCRIPTION OF ITEM SUBMITTED e.	TYPE OF SUBMITTAL: INSTALL f.	STA g.	CERT h.	CO & MAINT i.	CLASSIFICATION: INFORM CODE j.	APPROVED k.	REVIEWER r.	CONTRACTOR SCHEDULE DATES: SUBMIT s.	APPROVAL NEEDED BY t.	MATERIAL NEEDED BY u.	CONTRACTOR ACTION: CODE v.	DATE w.	GOVERNMENT ACTION: SUBMIT TO GOVERNMENT x.	CODE y.	DATE z.	REMARKS aa.
			1.2	TAB Related HVAC Submittals																	
			1.2	TAB Schematic Drawings and Report Forms																	
			1.2	TAB Procedures						X											
			1.2	Systems Readiness Check																	
			1.2	TAB Execution		X				X											
			1.2	TAB Verification						X											
			1.2	TAB Firm		X				X											
			1.2	TAB Specialist		X				X											
			1.2	Instrument Calibration																	
			1.2	Design Review Report						X											
			1.2	Systems Readiness Check Report																	
			1.2	TAB Report			X			X											
			1.2	TAB Verification Report																	
			1.2	Ductwork Leak Testing																	

SUBMITTAL REGISTER
(ER 415 1-10)

CONTRACT NO.

TITLE AND LOCATION: **Arvin Cadet Physical Development Center, Phase 2/3**

CONTRACTOR

SPECIFICATION SECTION: **15995**

ACTIVITY NO. a.	TRANS-MITTAL NO. b.	ITEM NO. c.	SPECIFICATION PARAGRAPH NUMBER d.	DESCRIPTION OF ITEM SUBMITTED e.	TYPE OF SUBMITTAL										CLASSIFICATION			CONTRACTOR SCHEDULE DATES			CONTRACTOR ACTION			GOVERNMENT ACTION		
						INS		STA		CERTI					INFORMATION	GO APPROVED	REVIEWER	SUBMIT	APPROVAL NEEDED BY	MATERIAL NEEDED BY	CODE	DATE	SUBMIT TO GOVERNMENT	CODE	DATE	REMARKS
			1.1	Commissioning Team											X											
			1.1	Test Procedures												X										
			1.1	Test Schedule				X								X										
			1.1	Test Reports						X						X										

SUBMITTAL REGISTER
(ER 415 1-10)

CONTRACT NO.

TITLE AND LOCATION: **Arvin Cadet Physical Development Center, Phase 2/3**

CONTRACTOR

SPECIFICATION SECTION: **16263**

ACTIVITY NO. a.	TRANS-MITTAL NO. b.	ITEM NO. c.	SPECIFICATION PARAGRAPH NUMBER d.	DESCRIPTION OF ITEM SUBMITTED e.	TYPE OF SUBMITTAL									CLASSIFICATION			CONTRACTOR SCHEDULE DATES			CONTRACTOR ACTION			GOVERNMENT ACTION		
						INS	STA	CERTI						INFORMATION	GO APPROVED	REVIEWER	SUBMIT	APPROVAL NEEDED BY	MATERIAL NEEDED BY	CODE	DATE	SUBMIT TO GOVERNMENT	CODE	DATE	REMARKS
														p.	q.	r.	s.	t.	u.	v.	w.	x.	y.	z.	aa.
			1.4	Equipment and Performance																					
			1.4	Harmonic and Non-linear Load Capability																					
			1.4	Torsional Vibration											X										
			1.4	Day Tank Capacity											X										
			1.4	Power Factor Capability Curve																					
			1.4	Cooling Equipment and Performance											X										
			1.4	Alarm Set Points											X										
			1.4	Generator Data											X										
			1.4	Manufacturer's Catalog																					
			1.3.6	Site Welding	X									X											
			1.4	Spare Parts	X									X											
			1.4	Training	X									X											
			1.4	Battery Charger											X										
			1.4	Vibration-Isolation										X											
			1.4	Layout and Shop Drawings																					
			1.4	As-Built Drawings											X										
			1.4	Posted Data			X								X										
			3.6	Framed Instructions											X										
			1.4	Qualifications					X					X											
			1.4	Welder Qualification																					
			1.4	Installation Procedures																					
			1.4	Listing of Product Installations																					
			2.25	Factory Inspection and Tests																					
			2.25.2	Factory Tests						X				X											
			1.4	On Site Tests						X				X											
			1.4	Torsional Vibration										X											
			1.4	Prototype Tests							X			X											

SUBMITTAL REGISTER
(ER 415 1-10)

CONTRACT NO.

TITLE AND LOCATION: **Arvin Cadet Physical Development Center, Phase 2/3**

CONTRACTOR

SPECIFICATION SECTION: **16263**

ACTIVITY NO. a.	TRANS-MITTAL NO. b.	ITEM NO. c.	SPECIFICATION PARAGRAPH NUMBER d.	DESCRIPTION OF ITEM SUBMITTED e.	TYPE OF SUBMITTAL: INS	STA	CERTI	CLASSIFICATION: INFORMATION	GO APPROVED	REVIEWER r.	CONTRACTOR SCHEDULE DATES: SUBMIT s.	APPROVAL NEEDED BY t.	MATERIAL NEEDED BY u.	CONTRACTOR ACTION: CODE v.	DATE w.	SUBMIT TO GOVERNMENT x.	GOVERNMENT ACTION: CODE y.	DATE z.	REMARKS aa.
			1.4	Reliability and Durability															
			1.4	Emissions			X	X											
			1.4	Site Visit			X	X											
			1.4	Flywheel Balance			X	X											
			1.4	Standards Compliance															
			1.4	Functional Facilities															
			1.4	Operation Manual				X	X										
			1.4	Maintenance Manual				X	X										
			1.4	Special Tools and Filters															

SUBMITTAL REGISTER
(ER 415 1-10)

CONTRACT NO.

TITLE AND LOCATION: **Arvin Cadet Physical Development Center, Phase 2/3**

CONTRACTOR

SPECIFICATION SECTION: **16265**

ACTIVITY NO. a.	TRANS-MITTAL NO. b.	ITEM NO. c.	SPECIFICATION PARAGRAPH NUMBER d.	DESCRIPTION OF ITEM SUBMITTED e.	TYPE OF SUBMITTAL										CLASSIFICATION			CONTRACTOR SCHEDULE DATES			CONTRACTOR ACTION			GOVERNMENT ACTION		
						INS	STA	CERTI							INFORMATION	GO APPROVED	REVIEWER	SUBMIT	APPROVAL NEEDED BY	MATERIAL NEEDED BY	CODE	DATE	SUBMIT TO GOVERNMENT	CODE	DATE	REMARKS
			1.3	UPS System Performance Data Sheets																						
			1.3	Spare Parts	X										X											
			1.3	Lesson Plans and Training Manuals																						
			1.3	UPS System		X										X										
			2.12	Factory Testing					X						X											
			3.2	Field Supervision, Startup and Testing																						

SUBMITTAL REGISTER
(ER 415 1-10)

CONTRACT NO.

TITLE AND LOCATION: **Arvin Cadet Physical Development Center, Phase 2/3**

CONTRACTOR

SPECIFICATION SECTION: **16370**

ACTIVITY NO. a.	TRANS-MITTAL NO. b.	ITEM NO. c.	SPECIFICATION PARAGRAPH NUMBER d.	DESCRIPTION OF ITEM SUBMITTED e.	TYPE OF SUBMITTAL: INS	STA	CERTI	CLASSIFICATION: INFORMATION	GO APPROVED	REVIEWER r.	CONTRACTOR SCHEDULE DATES: SUBMIT s.	APPROVAL NEEDED BY t.	MATERIAL NEEDED BY u.	CONTRACTOR ACTION: CODE v.	DATE w.	SUBMIT TO GOVERNMENT x.	GOVERNMENT ACTION: CODE y.	DATE z.	REMARKS aa.
			1.3	Manufacturer's Catalog															
			1.3	Material, Equipment, and Fixture Lists															
			1.3	Installation Procedures															
			1.3	Electrical Distribution System															
			1.3	As-Built Drawings				X											
			1.3	Factory Test			X	X											
			3.8	Field Testing			X	X											
			1.3	Test Reports			X		X										
			1.3	Materials and Equipment															

SUBMITTAL REGISTER
(ER 415 1-10)

CONTRACT NO.

TITLE AND LOCATION: **Arvin Cadet Physical Development Center, Phase 2/3**

CONTRACTOR

SPECIFICATION SECTION: **16375**

ACTIVITY NO. a.	TRANS-MITTAL NO. b.	ITEM NO. c.	SPECIFICATION PARAGRAPH NUMBER d.	DESCRIPTION OF ITEM SUBMITTED e.	TYPE OF SUBMITTAL: INS	STA	CERTI	CLASSIFICATION: INFORMATION	GO APPROVED	REVIEWER r.	CONTRACTOR SCHEDULE DATES: SUBMIT s.	APPROVAL NEEDED BY t.	MATERIAL NEEDED BY u.	CONTRACTOR ACTION: CODE v.	DATE w.	SUBMIT TO GOVERNMENT x.	GOVERNMENT ACTION: CODE y.	DATE z.	REMARKS aa.
			1.3	Fault Current and Protective Devices															
				Coordination Studies															
			1.3	Manufacturer's Catalog Data															
			1.3	Material, Equipment, and Fixture															
				Lists															
			1.3	Installation Procedures															
			1.3	Electrical Distribution System															
			1.3	As-Built Drawings					X										
			1.3	Factory Test			X	X											
			1.3	Field Testing			X		X										
			1.3	Test Reports			X		X										
			1.3	Cable Installation Reports															
			1.3	Materials and Equipment															
			1.3	Cable Splicer Qualification															
			1.3	Cable Installer Qualifications															
			1.3	Electrical Distribution System															

SUBMITTAL REGISTER
(ER 415 1-10)

CONTRACT NO.

TITLE AND LOCATION: **Arvin Cadet Physical Development Center, Phase 2/3**

CONTRACTOR

SPECIFICATION SECTION: **16410**

ACTIVITY NO. a.	TRANS-MITTAL NO. b.	ITEM NO. c.	SPECIFICATION PARAGRAPH NUMBER d.	DESCRIPTION OF ITEM SUBMITTED e.	TYPE OF SUBMITTAL: INS	STA	CERTI	CLASSIFICATION: INFORMATION	GO APPROVED	REVIEWER r.	CONTRACTOR SCHEDULE DATES: SUBMIT s.	APPROVAL NEEDED BY t.	MATERIAL NEEDED BY u.	CONTRACTOR ACTION: CODE v.	DATE w.	SUBMIT TO GOVERNMENT x.	GOVERNMENT ACTION: CODE y.	DATE z.	REMARKS aa.
			1.3	Switches	X				X										
			1.3	Material, Equipment, and Fixture Lists															
			1.3	Tests			X		X										
			1.3	Equipment and Materials															
			1.3	Switching Equipment					X										

SUBMITTAL REGISTER
(ER 415 1-10)

CONTRACT NO.

TITLE AND LOCATION: **Arvin Cadet Physical Development Center, Phase 2/3**

CONTRACTOR

SPECIFICATION SECTION: **16415**

ACTIVITY NO. a.	TRANS-MITTAL NO. b.	ITEM NO. c.	SPECIFICATION PARAGRAPH NUMBER d.	DESCRIPTION OF ITEM SUBMITTED e.	TYPE OF SUBMITTAL: INS	STA	CERTI	CLASSIFICATION: INFORMATION	GO APPROVED p.	REVIEWER r.	CONTRACTOR SCHEDULE DATES: SUBMIT s.	APPROVAL NEEDED BY t.	MATERIAL NEEDED BY u.	CONTRACTOR ACTION: CODE v.	DATE w.	SUBMIT TO GOVERNMENT x.	GOVERNMENT ACTION: CODE y.	DATE z.	REMARKS aa.
			1.3	Fault Current and Protective Device Coordination Study															
			1.3	Manufacturer's Catalog															
			1.3	Material, Equipment, and Fixture Lists															
			1.3	Installation Procedures															
			1.3	Interior Electrical Equipment															
			1.3	As-Built Drawings						X									
			1.3	Onsite Test		X				X									
			1.3	Factory Test Reports						X									
			1.3	Field Test Plan			X			X									
			1.3	Field Test Reports						X									
			1.3	Materials and Equipment															

SUBMITTAL REGISTER
(ER 415 1-10)

CONTRACT NO.

TITLE AND LOCATION: **Arvin Cadet Physical Development Center, Phase 2/3**

CONTRACTOR

SPECIFICATION SECTION: **16475**

ACTIVITY NO. a.	TRANS-MITTAL NO. b.	ITEM NO. c.	SPECIFICATION PARAGRAPH NUMBER d.	DESCRIPTION OF ITEM SUBMITTED e.	TYPE OF SUBMITTAL: INS	STA	CERTI	CLASSIFICATION: INFORMATION	GO APPROVED	REVIEWER r.	CONTRACTOR SCHEDULE DATES: SUBMIT s.	APPROVAL NEEDED BY t.	MATERIAL NEEDED BY u.	CONTRACTOR ACTION: CODE v.	DATE w.	SUBMIT TO GOVERNMENT x.	GOVERNMENT ACTION: CODE y.	DATE z.	REMARKS aa.
			1.2	Fault Current and Protective Device Coordination Study															
			1.2	Equipment Performance					X										
			1.2	Professional Engineer															
			1.2	Preventive Maintenance and Inspection															
			1.2	Installation Procedures															
			3.3	Field Testing			X	X											
			1.2	Devices and Equipment															

SUBMITTAL REGISTER
(ER 415 1-10)

CONTRACT NO.

TITLE AND LOCATION: **Arvin Cadet Physical Development Center, Phase 2/3**

CONTRACTOR

SPECIFICATION SECTION: **16710**

ACTIVITY NO. a.	TRANS-MITTAL NO. b.	ITEM NO. c.	SPECIFICATION PARAGRAPH NUMBER d.	DESCRIPTION OF ITEM SUBMITTED e.	TYPE OF SUBMITTAL: INS	STA	CERTI	CLASSIFICATION: INFORMATION	GO APPROVED	REVIEWER r.	CONTRACTOR SCHEDULE DATES: SUBMIT s.	APPROVAL NEEDED BY t.	MATERIAL NEEDED BY u.	CONTRACTOR ACTION: CODE v.	DATE w.	SUBMIT TO GOVERNMENT x.	GOVERNMENT ACTION: CODE y.	DATE z.	REMARKS aa.
			1.8	Spare Parts	X				X										
			1.8	Premises Distribution System															
			1.8	Record Drawings and Documentation					X										
			1.8	Manufacturer's Recommendations															
			1.8	Test Plan		X			X										
			1.5	Qualifications		X			X										
			1.8	Test Reports			X		X										
			1.8	Premises Distribution System															
			2.1	Materials and Equipment															
			1.8	Installers			X		X										
			1.8	Record Keeping and Documentation															

SUBMITTAL REGISTER
(ER 415 1-10)

CONTRACT NO.

TITLE AND LOCATION: **Arvin Cadet Physical Development Center, Phase 2/3**

CONTRACTOR

SPECIFICATION SECTION: **16800**

ACTIVITY NO. a.	TRANS-MITTAL NO. b.	ITEM NO. c.	SPECIFICATION PARAGRAPH NUMBER d.	DESCRIPTION OF ITEM SUBMITTED e.	TYPE OF SUBMITTAL: INS	STA	CERTI	CLASSIFICATION: INFORMATION	GO APPROVED	REVIEWER r.	CONTRACTOR SCHEDULE DATES: SUBMIT s.	APPROVAL NEEDED BY t.	MATERIAL NEEDED BY u.	CONTRACTOR ACTION: CODE v.	DATE w.	SUBMIT TO GOVERNMENT x.	GOVERNMENT ACTION: CODE y.	DATE z.	REMARKS aa.
			1.1	Materials and Equipment List															
			1.1	Block Diagram					X										
			1.1	Loudspeaker Mounting Drawings															
			1.1	Simplified Line Drawings															
			1.1	Equipment Rack Elevation Drawings															
			1.1	Receptacle Plan					X										
			1.1	Operating Manuals and Instruction Manuals															
			1.1	Software Manuals				X											
			1.1	Qualifications		X		X											
			1.1	References		X		X											
			1.1	Affirmation of Intent					X										
			1.1	Field Supervisor				X											
			1.1	Test Reports			X		X										

SECTION 01410

ENVIRONMENT PROTECTION

PART 1 GENERAL

1.1 GENERAL REQUIREMENTS

The Contractor shall perform the work minimizing environmental pollution and damage as the result of construction operations. Environmental pollution and damage is the presence, or release of chemical, physical, or biological elements or agents which adversely affect human health or welfare; unfavorably alter ecological balances of importance to human life; affect other species of importance to humankind; or degrade the utility of the environment for aesthetic, cultural and/or historical purposes. The control of environmental pollution and damage requires consideration of land, water, and air, and includes management of visual aesthetics, noise, solid waste, , as well as other pollutants. The environmental resources within the project boundaries and those affected outside the limits of permanent work shall be protected during the entire duration of this contract.

1.1.1 Subcontractors

The Contractor shall ensure compliance with this section by subcontractors.

1.1.2 Environmental Protection Plan

The Contractor shall submit an environmental protection plan within 10 days after receipt of the notice to proceed. Approval of the Contractor's plan will not relieve the Contractor of responsibility for adequate and continuing control of pollutants and other environmental protection measures. The environmental protection plan shall include, but shall not be limited to, the following:

a. A list of Federal, New York State, and local laws, regulations, and permits concerning environmental protection, pollution control and abatement that are applicable to the Contractor's proposed operations and the requirements imposed by those laws, regulations, and permits.

b. Methods for protection of features to be preserved within authorized work areas like trees, shrubs, vines, grasses and ground cover, landscape features, air and water quality, fish and wildlife, soil, historical, archaeological, and cultural resources.

c. Procedures to be implemented to provide the required environmental protection, to comply with the applicable laws and regulations, and to correct pollution due to accident, natural causes, or failure to follow the procedures of the environmental protection

plan.

d. Location of all disposal areas including hazardous materials disposal areas.

e. Drawings showing locations of any proposed temporary excavations or embankments for haul roads, stream crossings, material storage areas, structures, sanitary facilities, and stockpiles of excess or spoil materials.

f. Environmental monitoring plans for the job site, including land, water, air, and noise monitoring.

g. Traffic control plan including measures to reduce erosion of temporary roadbeds by construction traffic, especially during wet weather, and the amount of mud transported onto paved public roads by vehicles or runoff.

i. Plan showing the proposed activity in each portion of the work area and identifying the areas of limited use or nonuse. Plan should include measures for marking the limits of use areas.

j. Drawing of borrow area location. Protection measures required at the work site shall apply to the borrow areas including final restoration for subsequent beneficial use of the land.

k. A recycling and waste prevention plan with a list of measures to reduce consumption of energy and natural resources; for example: the possibility to shred fallen trees and use them as mulch shall be considered as an alternative to burning or burial.

l. Training for Contractor's personnel during the construction period.

m. Blasting zones structure protection plan (for rock blasting only).

1.1.3 Permits

The Contractor shall obtain all needed permits or licenses. The Government will not obtain any permits for this project; see Contract Clause PERMITS AND RESPONSIBILITIES. The New York State Department of Environmental Conservation , through the national pollutant discharge elimination system (NPDES), requires general permits, a notice of intent, and a notice of discontinuation. The Contractor shall be responsible for implementing the terms and requirements of the appropriate permits as needed and for payment of all fees.

1.1.4 Preconstruction Survey

Prior to starting any onsite construction activities, the Contractor and the Contracting Officer shall make a joint condition survey after which the Contractor shall prepare a brief report indicating on a layout plan the condition of trees, shrubs and grassed areas immediately adjacent to work sites and adjacent to the assigned storage area and access routes as applicable. This report will be signed by both the Contracting Officer and

the Contractor upon mutual agreement as to its accuracy and completeness.

1.1.5 Meetings

The Contractor shall meet with representatives of the Contracting Officer to alter the environmental protection plan as needed for compliance with the environmental pollution control program.

1.1.6 Notification

The Contracting Officer will notify the Contractor in writing of any observed noncompliance with the previously mentioned Federal, New York State or local laws or regulations, permits, and other elements of the Contractor's environmental protection plan. The Contractor shall, after receipt of such notice, inform the Contracting Officer of proposed corrective action and take such action when approved. If the Contractor fails to comply promptly, the Contracting Officer may issue an order stopping all or part of the work until satisfactory corrective action has been taken. No time extensions shall be granted or costs or damages allowed to the Contractor for any such suspensions.

1.1.7 Litigation

If work is suspended, delayed, or interrupted due to a court order of competent jurisdiction, the Contracting Officer will determine whether the order is due in any part to the acts or omissions of the Contractor, or subcontractors at any tier, not required by the terms of the contract. If it is determined that the order is not due to Contractor's failing, such suspension, delay, or interruption shall be considered as ordered by the Contracting Officer in the administration of the contract.

1.1.8 Previously Used Equipment

The Contractor shall thoroughly clean all construction equipment previously used at other sites before it is brought into the work areas, ensuring that soil residuals are removed and that egg deposits from plant pests are not present; the Contractor shall consult with the USDA jurisdictional office for additional cleaning requirements.

1.1.9 Payment

No separate payment will be made for work covered under this section; all costs associated with this section shall be included in the contract unit and/or lump sum prices in the Bidding Schedule.

1.2 DESCRIPTION OF WORK

The project consists of the demolition of selective portions of the existing Arvin Cadet Physical Development Center (Arvin CPDC), also known as Building 727; sitework, utilities, abatement of asbestos containing materials; selective abatement of lead based and lead containing paints to permit demolition; removal of PCB containing ballasts; and removal of mercury containing lamps.

Demolition and removal of the existing portions of the Arvin CPDC shall include the demolition and removal of the existing construction with non-friable asbestos containing materials in place, and lead containing and lead based paints in place.

All building debris resulting from the demolition and removal shall be considered Construction and Demolition (C+D) debris and disposed of at an approved category 360 landfill.

1.3 LAND RESOURCES

The Contractor shall confine all activities to areas defined by the drawings and specifications. Prior to the beginning of any construction, the Contractor shall identify the land resources to be preserved within the work area. Except in areas indicated on the drawings or specified to be cleared, the Contractor shall not remove, cut, deface, injure, or destroy land resources including trees, shrubs, vines, grasses, topsoil, and land forms without permission. No ropes, cables, or guys shall be fastened to or attached to any trees for anchorage unless specifically authorized. Where such emergency use is permitted, the Contractor shall provide effective protection for land and vegetation resources at all times as defined in the following subparagraphs. Stone, earth or other material displaced into uncleared areas shall be removed.

1.3.1 Work Area Limits

Prior to any construction, the Contractor shall mark the areas that need not be disturbed under this contract. Isolated areas within the general work area which are to be saved and protected shall also be marked or fenced. Monuments and markers shall be protected before construction operations commence. Where construction operations are to be conducted during darkness, the markers shall be visible at night. The Contractor's personnel shall be knowledgeable of the purpose for marking and/or protecting particular objects.

1.3.2 Landscape

Trees, shrubs, vines, grasses, land forms and other landscape features indicated and defined on the drawings to be preserved shall be clearly identified by marking. Trees or shrubs within the project site which might be damaged during demolition, and which are indicated to be left in place, shall be protected as required by Section 02230 CLEARING AND GRUBBING, Article 3.1. Fence shall be securely erected a minimum of 5 feet from the trunk of individual trees or follow the outer perimeter of branches or clumps of trees. Any tree designated to remain that is damaged during the work under this contract shall be replaced in kind or as approved by the Contracting Officer.

1.3.3 Unprotected Erodible Soils

Earthwork brought to final grade shall be finished as indicated. Side slopes and back slopes shall be protected as soon as practicable upon completion of rough grading. All earthwork shall be planned and conducted to minimize the duration of exposure of unprotected soils. Except in cases

where the constructed feature obscures borrow areas, quarries, and waste material areas, these areas shall not initially be totally cleared. Clearing of such areas shall progress in reasonably sized increments as needed to use the developed areas as approved by the Contracting Officer.

1.3.4 Disturbed Areas

The Contractor shall effectively prevent erosion and control sedimentation through approved methods including, but not limited to, the following:

a. Retardation and control of runoff. Runoff from the construction site or from storms shall be controlled, retarded, and diverted to protected drainage courses by means of diversion ditches, benches, berms, and by any measures required by area wide plans under the Clean Water Act.

b. Erosion and sedimentation control devices. The Contractor shall construct or install temporary and permanent erosion and sedimentation control features as indicated on the drawings. Berms, dikes, drains, sedimentation basins, grassing, and mulching shall be maintained until permanent drainage and erosion control facilities are completed and operative.

c. Sediment basins. Sediment from construction areas shall be trapped in temporary or permanent sediment basins in accordance with the drawings. The basins shall accommodate the runoff of a local 5 year storm event. After each storm, the basins shall be pumped dry and accumulated sediment shall be removed to maintain basin effectiveness. Overflow shall be controlled by paved weirs or by vertical overflow pipes. The collected topsoil sediment shall be reused for fill on the construction site, and/or stockpiled for use at another site. The Contractor shall institute effluent quality monitoring programs as required by New York State and local environmental agencies.

1.3.5 Contractor Facilities and Work Areas

The Contractor's field offices, staging areas, stockpile storage, and temporary buildings shall be placed in areas designated on the drawings or as directed by the Contracting Officer. Temporary movement or relocation of Contractor facilities shall be made only when approved. Borrow areas shall be managed to minimize erosion and to prevent sediment from entering nearby waters. Spoil areas shall be managed and controlled to limit spoil intrusion into areas designated on the drawings and to prevent erosion of soil or sediment from entering nearby waters. Spoil areas shall be developed in accordance with the grading plan indicated on the drawings. Temporary excavation and embankments for plant and/or work areas shall be controlled to protect adjacent areas from despoilment. Temporary fuel tanks shall have suitable secondary containment capable of containing 110% of the tank volume.

1.4 WATER RESOURCES

The Contractor shall keep construction activities under surveillance,

management, and control to avoid pollution of surface and ground waters. Toxic or hazardous chemicals shall not be applied to soil or vegetation when such application may cause contamination of the fresh water reserve. Monitoring of water areas affected by construction shall be the Contractor's responsibility. All water areas affected by construction activities shall be monitored by the Contractor.

1.4.1 Washing and Curing Water

Waste waters directly derived from hazardous materials abatement, disturbance, or removal activities, specifically demolition procedures involving building components coated with Lead-Based Paint (LBP) or Lead-Containing Paint (LCP), and , demolition of in-place regulated materials shall not be allowed to enter water areas. Waste waters shall be collected within leak-proof DOT approved containers whereupon water can be sampled and analyzed for asbestos, lead, cadmium, or chromium content. Analysis shall be performed and results reviewed. At this point it will be determined if the water in the leak-proof containers can be discharged to the sanitary sewer system, or it is to be disposed of as hazardous waste. If elevated levels of asbestos fibers are found, and no hazardous materials and detected, then the water can be filtered through a 20 micron pre-filter, and then through a final 5 micron filter prior to being discharged to the sanitary sewer system.

1.4.2 Fish and Wildlife

The Contractor shall minimize interference with, disturbance to, and damage of fish and wildlife. Species that require specific attention along with measures for their protection shall be listed by the Contractor prior to beginning of construction operations.

1.5 AIR RESOURCES

Equipment operation and activities or processes performed by the Contractor in accomplishing the specified construction shall be in accordance with the New York State's rules and all Federal emission and performance laws and standards. Ambient Air Quality Standards set by the Environmental Protection Agency shall be maintained. Monitoring of air quality shall be the Contractor's responsibility. All air areas affected by the demolition and related construction activities shall be monitored by the Contractor. Monitoring results will be periodically reviewed by the Government to ensure compliance.

1.5.1 Particulates

Dust particles; aerosols and gaseous by-products from construction activities; and processing and preparation of materials, such as from asphaltic batch plants; shall be controlled at all times, including weekends, holidays and hours when work is not in progress. The Contractor shall maintain excavations, stockpiles, haul roads, permanent and temporary access roads, plant sites, spoil areas, borrow areas, and other work areas within or outside the project boundaries free from particulates which would cause the air pollution standards to be exceeded or which would cause a hazard or a nuisance. Sprinkling, chemical treatment of an approved type,

light bituminous treatment, baghouse, scrubbers, electrostatic precipitators or other methods will be permitted to control particulates in the work area. Sprinkling, to be efficient, must be repeated to keep the disturbed area damp at all times. The Contractor must have sufficient, competent equipment available to accomplish these tasks. Particulate control shall be performed as the work proceeds and whenever a particulate nuisance or hazard occurs.

1.5.2 Hydrocarbons and Carbon Monoxide

Hydrocarbons and carbon monoxide emissions from equipment shall be controlled to Federal and New York State allowable limits at all times.

1.5.3 Odors

Odors shall be controlled at all times for all construction activities, processing and preparation of materials.

1.5.4 Sound Intrusions

The Contractor shall keep construction activities under surveillance and control to minimize environment damage by noise. The Contractor shall comply with the provisions of the State of New York's rules.

1.6 WASTE DISPOSAL

Disposal of wastes shall be as specified in 02120 TRANSPORTATION AND DISPOSAL OF HAZARDOUS MATERIALS and 02220 DEMOLITION, paragraph 1.2 of this Section, and as specified below.

1.6.1 Solid Wastes

Solid wastes (excluding clearing debris) shall be placed in containers which are emptied on a regular schedule. Handling and disposal shall be conducted to prevent contamination. Segregation measures shall be employed so that no hazardous or toxic waste will become co-mingled with solid waste. The Contractor shall transport solid waste off Government property and dispose of it in compliance with Federal, New York State 6 NYCRR Part 360 and Part 364, and local requirements for solid waste disposal. Waste materials shall be hauled to the Government approved landfill site chosen by the Contractor and approved by the Contracting Officer. The Contractor shall comply with site procedures, Federal, New York State, and local laws and regulations pertaining to the use of the landfill.

1.6.2 Chemical Wastes

Chemicals shall be dispensed ensuring no spillage to ground or water. Periodic inspections of dispensing areas to identify leakage and initiate corrective action shall be performed and documented. This documentation will be periodically reviewed by the Government. Chemical waste shall be collected in corrosion resistant, compatible containers. Collection drums shall be monitored and removed to a staging or storage area when contents are within6 inches of the top. Wastes shall be disposed of in accordance with Federal, State and local laws and regulations.

1.6.3 Hazardous Wastes

The Contractor shall take sufficient measures to prevent spillage of hazardous and toxic materials during dispensing and shall collect waste in DOT approved containers observing compatibility. The Contractor shall transport hazardous waste off Government property and dispose of it in compliance with Federal, State and local laws and regulations. Spills of hazardous or toxic materials shall be immediately reported to the Contracting Officer. Cleanup and cleanup costs due to spills shall be the Contractor's responsibility.

1.6.4 Burning

Burning of surfaces coated with Lead-Based paints (LBP) is prohibited, refer to Section 02090.

1.7 POST CONSTRUCTION CLEANUP

The Contractor shall clean up all areas used for construction.

1.8 RESTORATION OF LANDSCAPE DAMAGE

The Contractor shall restore landscape features damaged or destroyed during construction operations outside the limits of the approved work areas.

1.9 MAINTENANCE OF POLLUTION FACILITIES

The Contractor shall maintain permanent and temporary pollution control facilities and devices for the duration of the contract or for that length of time construction activities create the particular pollutant.

1.10 TRAINING OF CONTRACTOR PERSONNEL

The Contractor's personnel shall be trained in all phases of environmental protection. The training shall include methods of detecting and avoiding pollution, familiarization with pollution standards, both statutory and contractual, and installation and care of devices, vegetative covers, and instruments required for monitoring purposes to ensure adequate and continuous environmental pollution control.

PART 2 PRODUCTS (NOT USED)

PART 3 EXECUTION (NOT USED)

-- End of Section --

SECTION 01420

SAFETY

PART 1 GENERAL

1.1 REFERENCES

The publications listed below form a part of this specification to the extent referenced. The publications are referred to in the text by basic designation only.

NATIONAL FIRE PROTECTION ASSOCIATION (NFPA)

NFPA 70 (1996) National Electrical Code

1.2 SUBMITTALS

Government approval is required for submittals with a "GA" designation; submittals having an "FIO" designation are for information only. The following shall be submitted in accordance with Section 01330 SUBMITTAL PROCEDURES:

SD-08 Statements

Qualifications;; FIO.

Submit qualifications of Site Safety Officer as part of Accident Prevention Plan.

Submit qualifications of crane and derrick operators as required below.

SD-09 Reports

Accident Prevention Plan; GA.

Submit Accident Prevention Plan in required below.

Activity Hazard Analysis; GA.

Submit Activity Hazard Analysis for each activity as required below.

Daily Inspection Logs; FIO.

Submit daily inspection logs as part of Daily Quality Control Report as required below.

Energized Line Work Plan; GA.

Submit Energized Line Work Plan as required below.

Monthly Exposure Reports; FIO.

Submit Monthly Exposure Reports as required below.

Proposed Temporary Power Plan; GA.

Submit Proposed Temporary power Plan as required below.

Radiation Safety Program; FIO.

Submit radiation safety program as required below.

SD-13 Certificates

Certification; GA.

Manufacturers of construction equipment shall submit certification that the construction equipment conforms to the requirements of EM 385-1-1 as required below.

1.3 SAFETY

The contractor shall comply with all applicable Federal, State, and local safety and occupational health laws and regulations. Applicable provisions of the Corps of Engineers manual entitled Safety and Health Requirements Manual EM 385-1-1, dated 3 September 1996 will be applied to all work under this contract. The referenced manual may be purchased from the Contracting Officer's Representative (COR) at the job site, from the U.S. Government Printing Office, Superintendent of Documents, Mail Stop: SSOP, Washington, DC 20402-9328, or via the internet at www.USACE.army.mil.

1.4 ACCIDENT PREVENTION PROGRAM

Within fifteen (15) calendar days after receipt of Notice to Proceed, and at least ten (10) calendar days prior to the Preconstruction Safety Conference, four (4) copies of the Accident Prevention Plan shall be submitted for review and acceptance by the Contracting Officer or the Contracting Officers Representative (COR). The accident prevention program shall be prepared in the format outlined in Appendix A of EM 385-1-1, "Minimum Basic Requirements for Accident Prevention Plan".

1.5 HAZARD ANALYSIS

Prior to beginning each major phase of work, an Activity Hazard Analysis shall be prepared by the Contractor performing that work, and submitted for review and acceptance. The format shall be in accordance with EM 385-1-1, figure 1-1. A major phase of work is defined as a operation involving a type of work presenting hazards not experienced in previous operations or where a new contractor or work crew is to perform. (See Contractor Quality Control specification for further guidance regarding coordination of "Activities" and "Principal Steps" indicated in the Activity Hazard Analysis with Contractor Quality Control activities). The analysis shall define the activities to be performed and identify the sequence of work,

the specific hazards anticipated, and the control measures to be implemented to eliminate or reduce each hazard to an acceptable level. Work shall not proceed on that phase until the activity hazard analysis has been accepted and a preparatory meeting has been conducted by the Contractor to discuss its contents with everyone engaged in the activities, including the government on-site representative(s). The activity hazard analyses shall be continuously reviewed and when appropriate modified to address changing site conditions or operations, with the concurrence of the site safety representative, the site superintendent, and the Contracting Officer. Activity hazard analyses shall be attached to and become part of the accident prevention plan. It may also be developed prior to each phase of work undertaken in the contract.

1. Hazard analysis shall be used to identify and evaluate all substances, agents, or environments that present hazards and recommend control measures. Engineering and administrative controls shall be used to control hazards; in cases where engineering or administrative controls are not feasible, personal protective equipment may be required by the Safety Officer and subject to the approval of the Contracting Officer.

2. Information contained in MSDS (Material Safety Data Sheets) shall be incorporated in the hazard analysis for the activities in which hazardous or toxic materials will be used, or generated (e.g. fiberglass, crystalline silica, metal dust or fume, etc.).

1.6 SITE SAFETY OFFICER

The contractor shall identify an individual directly employed by the contractor as Site Safety Officer responsible to the Contractor to implement and continually enforce the Accident Prevention Plan. The site safety officer shall not be the same individual as the Quality Control System Manager if the CQC System Manager is required to have no duties other than Quality Control. The site safety officer shall have the authority to suspend operational activities if the health and safety of personnel are endangered, and to suspend an individual from operational activities for infractions of the Accident Prevention Plan. See Section 00800 for additional requirements.

1.6.1 Qualifications

The name, qualifications (training and experience) of the designated Site Safety Officer shall be included in the Accident Prevention Plan. The Site safety officer shall have the following qualifications:

a. A minimum of 5 years construction experience with at least 2 years experience in implementing safety programs at construction work sites for projects of comparable scope and complexity.

b. Documented experience in construction techniques and construction safety procedures.

c. Working knowledge of Federal and state occupational health and safety regulations.

d. Specific training in excavation safety, fall protection, and confined space.

e. CPR/First Aid certification (current)

f. Familiarity with and ability to use and implement the Corps of Engineers Safety Manual EM 385-1-1.

1.6.2 Other Requirements

Other sections of the contract documents may also require separate specially qualified individuals in such areas a chemical data acquisition, sampling and analysis, medical monitoring, industrial hygiene, quality control, etc.

1.7 SITE INSPECTIONS

The site safety officer shall perform daily inspections of the job sites and the work in progress to ensure compliance with EM 385-1-1 and to determine the effectiveness of the accident prevention plan. Daily inspection logs shall be used to document inspections noting safety and health deficiencies, deficiencies in the effectiveness of the accident prevention plan, and corrective actions including timetable and responsibilities. The daily inspection logs will be attached to and submitted with the Daily Quality Control Reports or may be incorporated in the daily CQC report. Each entry shall include date, work area checked, employees present in work area, protective equipment and work equipment in use, special safety and health issues and notes, and signature of the preparer.

1.8 HIGHLIGHTED PROVISIONS

In addition to those items contained in EM 385-1-1, Appendix A, include the following items in the accident prevention plan:

1.8.1 Hard Hat Area

A statement that the job site is classified a "hard hat" area from start to finish.

1.8.2 Sanitation and Medical Requirements

Estimate the greatest number of employees, supervisors, etc., to be working at peak construction period, including subcontractor personnel. Include sanitation requirements and medical facilities identified for the job site. If a medical facility or physician is not accessible within five minutes of an injury to a group of two or more employees for the treatment of injuries, identify at least two or more employees on each shift who are qualified to administer first aid and CPR.

1.8.3 Equipment Inspection

The type of inspection program on cranes, trucks, and other types of

construction equipment the Contractor plans to implement. Who will be responsible for the inspection and how the Contractor will control equipment of sub-contractors and equipment bought to the site by rental companies. Types of records to be kept shall include:

a. Copies of records of all equipment inspections will be kept at the job site for review by the designated authority.

1.8.4 Crane & Derrick Operators

Written proof of qualification for all crane and derrick operators in accordance with EM 385-1-1, 16.C.04. Qualification shall be by written (or oral) examination and practical operating examination unless the operator is licensed by a state or city licensing agency for the particular type of crane or derrick. Proof of qualification shall be provided by the qualifying source.

1.9 ACCIDENT REPORTS

The contractor shall immediately report all accidents by telephone to the COR.

1. The Contractor will provide an initial written report of the accident to the COR within 24 hours. The Contractor shall complete and submit ENG Form 3394 for all accidents involving lost work time, medical treatment, and/or property damage in excess of $2000.00 within 48 hours of the accident. The report shall accurately represent the circumstances of the accident, cause of the accident, extent of medical treatment, extent of injuries and steps to prevent occurrence of similar accidents. The hazard analysis covering the work activity being undertaken during the accident shall be attached to the report.

2. Daily records of all first aid treatment not otherwise reportable shall be maintained at the job site and furnished to the designated authority upon request. Records shall also be maintained of all exposure and accident experience incidental to the work (OSHA Form 200 or equivalent as prescribed by 29 CFR 1904).

1.10 MONTHLY EXPOSURE REPORTS

The Contractor shall submit to the COR no later than the 1st day of each month, a compilation of manhours worked each month by the prime contractor and each subcontractor. In addition, the contractor shall report the number of accidents, severity, class of accidents, and lost time work days for each month.

1.11 CLEAN-UP

The Contractor's Accident Prevention Plan shall identify the individual's responsible for cleanup and shall establish a regular housekeeping procedure and schedule. If the COR determines that cleanup is not being performed satisfactorily, the Contractor shall establish a work crew to

perform the continuous cleanup required by the contract clause titled CLEANING UP. The number of individuals appointed to the cleanup work crew shall be increased as required in order to render adequate cleanup.

1.12 FOCUS AREAS

To supplement and emphasize the requirements of EM 385-1-1, the following is provided and shall be met as applicable.

1.12.1 Electrical Work

Electrical work shall not be performed on or near energized lines or equipment unless specified in the plans and specifications and approved by the COR. Plan and layout of proposed temporary power to the construction site shall be submitted and approved by the COR before work will be permitted.

1. Upon request by the Contractor, arrangements will be made for de-energizing lines and equipment so that work may be performed. All outages shall be requested through the COR a minimum of 14 days, unless otherwise specified, prior to the beginning of the specified outages. Dates and duration will be specified.

1.12.2 Hot Line Work

If approved by the COR, the following work may be performed with the lines energized using certified hot line equipment on lines above 600 volts, when the following conditions have been met:

a. Work below the conductors no closer than the clearance required in EM 385-1-1 from the energized conductors.
b. Setting and connection of new pre-trimmed poles in energized lines which do not replace an existing pole.
c. Setting and removing transformers or other equipment on poles.
d. Installation or removal of hot line connectors, jumpers, dead-end insulators for temporary isolation, etc., which are accomplished with hot line equipment from an insulated bucket truck.

1.12.3 Energized Line Work Plan

The Contractor shall submit a plan, in writing, describing his/her method of operation and the equipment to be used on energized lines. Proper certification from an approved source of the safe condition of all tools and equipment will be provided with the plan. The work will be planned and scheduled so that proper supervision is maintained. Emergency procedures, including communication, for disconnecting power in the event of an accident will be outlined in the plan. The Contractor will review his/her plan with the COR prior to being granted permission to perform the work.

1.12.4 Work on Lines Greater Than 600 Volts

No work on lines greater than 600 volts will be performed from the pole or without the use of an insulated bucket truck.

1.12.5 Work on Overbuilt Lines

No work will be done on overbuilt lines while underbuilt lines are energized, except for temporary isolation and switching.

1.12.6 Electrical Tools and Cords

Hand held electrical tools shall be used only on circuits protected by ground fault circuit interrupters for protection of personnel. All general use extension cords shall be hard usage or extra hard usage as specified in Table 11-1 of EM 385-1-1. Damaged or repaired cords shall not be permitted.

1.12.7 Temporary Power

Temporary electrical distribution systems and devices shall be checked and found acceptable for polarity, ground continuity, and ground resistance before initial use and after modification. GFI outlets shall be installed and tested with a GFI circuit tester (tripping device) prior to use. Portable and vehicle mounted generators shall be inspected for compliance with EM 385-1-1 and NFPA 70. All electrical equipment located outdoors or in wet locations shall be enclosed in weatherproof enclosures in accordance with EM 385-1-1. Records of all tests and inspections will be kept by the contractor and made available on site for review by the designated authority. Submit sketch of proposed temporary power for acceptance.

1.12.8 Rollover Protective Structures (ROPS)

Seat belts and ROPS shall be installed on all construction equipment as required by paragraph 16.B.12 of EM 385-1-1. The operating authority will furnish proof from the manufacturer or licensed engineer that ROPS meets the applicable SAE standards cited in EM 385-1-1, pg. 257.

1.12.9 Radiation Permits or Authorizations

Contractors contemplating the use of a licensed or DOD regulated radiological device or radioactive material on a DOD installation will secure appropriate permit or authorization from the Department of Army or Department of the Air Force, as applicable. A 45-day lead-time should be programmed for obtaining the necessary authorization or permit. When requested, the COR will assist the Contractor in obtaining the required permit or authorization.

. The Contractor shall develop and implement a radiation safety program to comply with EM 385-1-1, Section 06.E. Provisions for leak tests, authorized personnel, transport certificates, etc. will be addressed in the radiation safety program.

1.12.10 Elevating Work Platforms

All elevating work platforms shall be designed, constructed, maintained, used, and operated in accordance with ANSI A92.3, ANSI A92.6, ANSI A92.5 and EM 385-1-1, Sections 22.J and 16.A.

1. Only personnel trained in the use of elevating work platforms shall be authorized to use them. A list of authorized users will be maintained by the contractor at the job site. The list will be updated to remain current and made available for review on site by the designated authority.

2. Personnel safety belts must be worn.

1.12.11 Fall Protection

Fall protection in the form of standard guardrails, nets, or personal fall arrest systems will be provided for all work conducted over 6 feet in height. The contractor will submit his/her proposed method of fall protection to the COR as part of the Activity Hazard Analysis for acceptance. If the contractor deems that conventional fall protection as described above is not feasible, or creates a greater hazard, the Contractor will prepare a written fall protection plan in accordance with OSHA 29 CFR 1926.502(k). The plan will demonstrate the reasons that conventional fall protection is unfeasible or constitutes a greater hazard and will provide alternative safety measures for review and acceptance by the COR.

1.12.12 Excavations

All open excavations made in the earth's surface four (4) foot or greater will be under the supervision of a competent person trained in, and knowledgeable about, soils analysis, the use of protective systems, and the requirements of OSHA 29 CFR 1926, Subpart P and EM 385-1-1, Section 25. The competent person shall be designated in writing by the Contractor and a resume of their training and experience submitted to the COR for acceptance.

1. Excavations hazards and methods for their control will be specified in the Activity Hazard Analysis.

2. Sloping and benching: The design of sloping and benching shall be selected from and in accordance with written tabulated data, such as charts and tables. At least one copy of the tabulated data will be maintained at the job site.

3. Support Systems shall be in accordance with one of the systems outlined in a through c below:

   a. Designs drawn from manufacturer's specifications and in accordance with all specifications, limitations, and recommendations issued or made by the manufacturer. A copy of the manufacture's specifications, recommendations, and limitations will be in written form and maintained at the job site.

   b. Designs selected from and in accordance with tabulated data (such as tables and charts). At least one copy of the design shall be maintained at the job site during excavation.

   c. Designed by a registered engineer. At least one copy of the

design shall be maintained at the job site during excavation.

1.12.12.1 Excavations Greater than 20 Feet in Height

Sloping and benching or support systems shall be designed by a registered professional engineer. Designs shall be in writing and at least one copy of the design shall be maintained at the job site during excavation. The contractor will ensure that the registered professional engineer is working within a discipline applicable to the excavation work; i.e. it would be inappropriate for an electrical engineer to approve shoring designed for an excavation.

1.12.13 Confined Space

Entry into and work in a confined space will not be allowed when oxygen readings are less than 19.5% or greater than 23.5% or if the lower explosive limit (LEL) reading is greater than 10%, unless these conditions are adequately addressed in the confined space entry plan. In addition, action levels for toxic atmospheres shall be determined and any other known or potential hazards eliminated prior to entry.

1.13 LANGUAGE

For each group that has employees that do not speak English, the Contractor will provide a bilingual foreman that is fluent in the language of the workers. The contractor will implement the requirements of EM 385-1-1, 01.B through these foremen.

1.14 CONTRACTOR SAFETY MEETINGS AND DOCUMENTATION

Contractor shall conduct and document safety meetings among its personnel as required by EM 385-1-1 and as indicated herein. Monthly meetings shall be held among all supervisors, and weekly meetings shall be conducted by supervisors or foreman for all workers. The agenda of the meeting shall include specific safety items pertinent to work being performed. Documentation shall include a summary of items discussed as well as other items required by the EM 385-1-1. Documentation shall be submitted to the Government monthly.

1.15 COORDINATION WITH OTHER SPECIFICATION SECTIONS

The requirements of this section are meant to supplement requirements of other sections. In cases of discrepancies the most stringent requirements shall apply. Other safety-related requirements can be found in the following specification sections:

a. Specification Section 00800, Special Contract Requirements
b. Specification Section 00700, Contract Clauses, paragraph entitled "Accident Prevention"
c. Specification Section entitled "Contractor Quality Control"
d. Other specifications or contract requirements relating to site safety or health requirement or medical monitoring.

1.16 CONTRACTOR PERFORMANCE APPRAISAL

The occurrence of accidents and near misses due to negligence are strong indications that there has been insufficient emphasis on effective implementation and/or commitment to the accident prevention program. Should it become obvious that only lip service is being given to this program, an interim unsatisfactory performance appraisal rating will be issued. If safety continues to be unsatisfactory or marginal, the unsatisfactory rating will become final. The contractor should be aware that this appraisal will be stored in a national computer database which can be accessed by a multitude of agencies or municipalities desiring information on prospective contractors. An unsatisfactory rating in this database may affect the contractor's ability to obtain future Government work.

PART 2 PRODUCTS (Not Applicable)

PART 3 EXECUTION (Not Applicable)

-- End of Section --

SECTION 01451

CONTRACTOR QUALITY CONTROL

PART 1 GENERAL

1.1 SUBMITTALS

Government approval is required for submittals with a "GA" designation; submittals having an "FIO" designation are for information only. The following shall be submitted in accordance with Section 01330 SUBMITTAL PROCEDURES:

SD-08 Statements

Quality Control Plan; GA.

Submit a Quality Control Plan as specified in Article 3.2 of this Section.

1.2 PAYMENT

Separate payment will not be made for providing and maintaining an effective Quality Control program, and all costs associated therewith shall be included in the applicable unit prices or lump- sum prices contained in the Bidding Schedule.

PART 2 PRODUCTS (Not Applicable)

PART 3 EXECUTION

3.1 GENERAL

The Contractor is responsible for quality control and shall establish and maintain an effective quality control system in compliance with the Contract Clause entitled "Inspection of Construction." The quality control system shall consist of plans, procedures, and organization necessary to produce an end product which complies with the contract requirements. The system shall cover all construction operations, both onsite and off site, and shall be keyed to the proposed construction sequence. For purposes of this section the term "construction" shall include all items of work, activities, materials and equipment as indicated in the contract documents. Other sections of the contract documents may also require separate, specially qualified individuals in such areas as chemical data acquisition, sampling and analysis, medical monitoring, industrial hygiene, safety officer, and the like. The CQC organization will coordinate the activities of these individuals. The project superintendent will be held responsible for the quality of work on the job and is subject to removal by the Contracting Officer for non-compliance with quality requirements specified in the contract. The project superintendent in this context shall mean the on-site individual with the responsibility for the overall management of the project including logistics and production.

3.2 QUALITY CONTROL PLAN

3.2.1 General

The Contractor shall furnish for review by the Government, not later than 30 days after receipt of notice to proceed, the Contractor Quality Control (CQC) Plan proposed to implement the requirements of the Contract Clause entitled "Inspection of Construction." The plan shall identify personnel, procedures, control, instructions, test, records, and forms to be used. Within 15 days after Notice to Proceed, the Contractor dhall submit an interim plan for the first 90 days of operation. Construction will be permitted to begin only after acceptance of the CQC Plan or acceptance of an interim plan applicable to the particular feature of work to be started. Work outside of the features of work included in an accepted interim plan will not be permitted to begin until acceptance of a CQC Plan or another interim plan containing the additional features of work to be started.

3.2.2 Content of the CQC Plan

he CQC Plan shall include, as a minimum, the following to cover all construction operations, both onsite and off site, including work by subcontractors, fabricator, suppliers, and purchasing agents:

a. A description of the quality control organization, including a chart showing lines of authority and acknowledgment that the CQC staff shall implement the three phase control system for all aspects of the work specified. The staff shall include a CQC System Manager who shall report to the project superintendent.

b. The name, qualifications (in resume format), duties, responsibilities, and authorities of each person assigned a CQC function. Clear indication that CQC System Manager will have no duties other than Quality Control.

c. A copy of the letter to the CQC System Manager signed by an authorized official of the firm which describes the responsibilities and delegates sufficient authorities to adequately perform the functions of the CQC System Manager, including authority to stop work which is not in compliance with the contract. The CQC System Manager shall issue letters of direction to all other various quality control representatives outlining duties, authorities, and responsibilities. Copies of these letters will also be furnished to the Government.

d. Procedures for scheduling, reviewing, certifying, and managing submittals, including those of subcontractors, off site fabricators, suppliers, and purchasing agents. These procedures shall be in accordance with Section 01330 SUBMITTAL PROCEDURES.

e. Control, verification, and acceptance testing procedures for each specific test to include the test name, specification paragraph requiring test, feature of work to be tested, test frequency, and person responsible for each test. (Laboratory facilities will be

approved by the Contracting Officer.) The Contractor shall incorporate all tests required by the contract (including systems commissioning and operating tests) to derive the above list of testing information which shall be presented in matrix form as part of the CQC Plan. This matrix shall be suitable for use by the Contractor and the Government as a checklist to control testing to be done on the contract. Coordinate any additional test submission or plan requirements for Mechanical and Electrical Systems with appropriate specialized specification section if applicable.

f. Procedures for tracking preparatory, initial, and follow-up control phases and control, verification, and acceptance tests including documentation. Provide matrix of Preparatory and Initial Inspections including specification reference paragraph, the name of the Definable Feature of Work, and spaces for date performed, results, and names of attendees.

g. Procedures for tracking construction deficiencies from identification through acceptable corrective action. These procedures will establish verification that identified deficiencies have been corrected.

h. Reporting procedures, including proposed reporting formats.

i. A list of the definable features of work. A definable feature of work is a task which is separate and distinct from other tasks and has separate control requirements. It could be identified by different trades or disciplines, or it could be work by the same trade in a different environment. Although each section of the specifications may generally be considered as a definable feature of work, there is frequently more than one definable feature under a particular section. This list will cover all features of work on the project, and will be agreed upon during the coordination meeting.

j. A brief explanation of the duties of the CQC organization with respect
To safety. Note that separate Accident Prevention Plan and Hazards Analysis is required for submission and acceptance.

k. Contractor's plan for training all CQC personnel in the CQC System.

3.2.3 Acceptance of Plan

Acceptance of the Contractor's plan is required prior to the start of construction. Acceptance is conditional and will be predicated on satisfactory performance during the construction. The Government reserves the right to require the Contractor to make changes in his CQC Plan and operations including removal of personnel, as necessary, to obtain the quality specified.

3.2.4 Notification of Changes

After acceptance of the CQC Plan, the Contractor shall notify the Contracting Officer in writing of any proposed change. Proposed changes are subject to acceptance by the Contracting Officer.

3.3 COORDINATION MEETING

After the Pre-construction Conference, before start of construction, and prior to acceptance by the Government of the CQC Plan, the Contractor shall meet with the Contracting Officer or Authorized Representative and discuss the Contractor's quality control system. The CQC Plan shall be submitted for review a minimum of 14 calendar days prior to the Coordination Meeting. The initial plan submitted must be found acceptable by the Government before the Coordination Meeting can be held. During the meeting, a mutual understanding of the system details shall be developed, including the forms for recording the CQC operations, control activities, testing, administration of the system for both onsite and off site work, and the interrelationship of Contractor's Management and control with the Government's Quality Assurance. Minutes of the meeting shall be prepared by the Government and signed by both the Contractor and the Contracting Officer. The minutes shall become a part of the contract file. There may be occasions when subsequent conferences will be called by either party to reconfirm mutual understandings and/or address deficiencies in the CQC system or procedures which may require corrective action by the Contractor.

3.4 QUALITY CONTROL ORGANIZATION

3.4.1 General

The requirements for the CQC organization are a CQC System Manager and sufficient number of additional qualified personnel to ensure contract compliance. The number of CQC personnel shall be increased as required during times of high construction workload. The Contractor shall provide a CQC organization which shall be at the site at all times during progress of the work and with complete authority to take any action necessary to ensure compliance with the contract. All CQC staff members shall be subject to acceptance by the Contracting Officer.

3.4.2 CQC System Manager

The Contractor shall identify as CQC System Manager an individual within his organization at the site of the work who shall be responsible for overall management of CQC and have the authority to act in all CQC matters for the Contractor. See specification section 00800 for CQCM qualifications and additional requirements. This CQC System Manager shall be on the site at all times during construction and will be employed by the prime Contractor. An alternate for the CQC System Manager will be identified in the plan to serve in the event of the System Manager's absence. The requirements for the alternate will be the same as for the designated CQC System Manager. The CQC System Manager shall be assigned no duties other than Quality Control.

3.4.3 Organizational Expertise

The CQC organization, which includes the CQC System Manager and additional qualified personnel, must as a minimum possess general corporate technical knowledge of all aspects of the project, and must successfully execute the CQC System on all aspects of the project. Individuals possessing experience in specialized areas shall be added to the organization as required during periods when such specialty areas are being executed. Examples of such specialized areas would include HVAC, electrical distribution and substations, roofing, tele-communication systems, fire protection and alarm systems, computer installations, specialized welding, specialized finishes, precast concrete installation, modular housing, specialized geotech work, dredging, sand placement and surveying, chemical data acquisition, hazardous material removal and disposal, medical monitoring, etc., depending on the nature of the particular project. The Contractor must demonstrate that such additional qualified personnel have received sufficient training and indoctrination into the CQC system, and that these personnel properly execute the requirements of the CQC System within their areas of expertise.

3.4.4 Additional Requirement

In addition to the above experience and education requirements the CQC System Manager, CQCM Alternate, Key Management Personnel(as identified in specifications section 0800) and the additional qualified personnel of the major subcontractors, shall have completed within the last five years the course entitled "Construction Quality Management for Contractors". This course is given at a cost of $25 by Government personnel, is of two- day duration and is at New York District Office 26 Federal Plaza NYCity. The Government will provide one instruction manual for the course.

3.4.5 Organizational Changes

The Contractor shall maintain the CQC Organization at full strength at all times. When it is necessary to make changes to the organization, the Contractor shall revise the CQC Plan to reflect the changes and submit the changes to the Contracting Officer for acceptance.

3.5 SUBMITTALS

Submittals shall be made as specified in Section 01330 SUBMITTAL PROCEDURES. The CQC organization shall be responsible for certifying that all submittals are in compliance with the contract requirements and are submitted in accordance with the date on the submittal register. CQC personnel shall also make physical checks of materials and equipment before installation to insure compliance with approved shop drawings.

3.6 CONTROL

Contractor Quality Control is the means by which the Contractor ensures that the construction, to include that of subcontractors and suppliers, complies with the requirements of the contract. At least three phases of control shall be conducted by the CQC System Manager for each definable feature of work as follows:

3.6.1 Preparatory Phase

This phase shall be performed prior to beginning work on each definable feature of work after all required plans/documents/materials are approved/accepted, and after copies are at the worksite, and shall include:

a. A review of each paragraph of applicable specifications.

b. A review of the contract drawings.

c. A check to assure that all materials and/or equipment have been tested, submitted, and approved.

d. Review of provisions that have been made to provide required control inspection and testing.

e. Examination of the work area to assure that all required preliminary work has been completed and is in compliance with the contract.

f. A physical examination of required materials, equipment, and sample work to assure that they are on hand, conform to approved shop drawings or submitted data, and are properly stored.

g. A review of the appropriate activity hazard analysis to assure safety requirements are met per EM 385-1-1, "Safety and Health Requirements Manual".

h. Discussion of procedures for controlling quality of the work including repetitive deficiencies. Document construction tolerances and workmanship standards for that feature of work.

i. A check to ensure that the portion of the plan for the work to be performed has been accepted by the Contracting Officer.

j. Discussion of the initial control phase.

k. The Government shall be notified at least 48 hours in advance of beginning the preparatory control phase meeting. This phase shall include a meeting conducted by the CQC System Manager and attended by the superintendent, other CQC personnel (as applicable), and the foreman responsible for the definable feature. The results of the preparatory phase actions shall be documented by separate minutes prepared by the CQC System Manager and attached to the daily CQC report. The Contractor shall clearly indicate its intent and plan for communication of the results of the preparatory phase to applicable workers, to include materials, construction methods, workmanship standards, safety considerations and procedures, and preparatory phase meeting minutes.

3.6.2 Initial Phase

This phase shall be accomplished at the beginning of a definable feature of

work (DFW) when the accomplishment of a representative sample of the work is impending. The following shall be accomplished:

a. A check of the portion of work done to ensure that it is in full compliance with contract requirements. Review minutes of the preparatory meeting.

b. Verify adequacy of controls to ensure full contract compliance. Verify required control inspection and testing.

c. Establish level of workmanship and verify that it meets minimum acceptable workmanship standards. Compare with required sample panels as appropriate.

d. Resolve all differences.

e. Check safety to include compliance with and upgrading of the safety plan and activity hazard analysis. Review the activity analysis with each worker.

f. The Government shall be notified at least 48 hours in advance of beginning the initial phase meeting. This phase shall include a meeting conducted by the CQC System Manager and attended by the superintendent, other CQC personnel (as applicable), the foreman responsible for the definable feature and the work crew(s) for the appropriate DFW. Separate minutes of this phase shall be prepared by the CQC System Manager and attached to the daily CQC report. Exact location (i.e. CQC Report number) of initial phase shall be indicated for future reference and comparison with follow-up phases.

g. The initial phase should be repeated for each new crew to work onsite, or any time acceptable specified quality standards are not being met.

3.6.3 Follow-up Phase

Daily checks shall be performed to assure control activities, including control testing, are providing continued compliance with contract requirements, until completion of the particular feature of work. The checks shall be made a matter of record in the CQC documentation. Final follow-up checks shall be conducted and all deficiencies corrected prior to the start of additional features of work which may be affected by the deficient work. The Contractor shall not build upon or conceal non-conforming work.

3.6.4 Additional Preparatory and Initial Phases

Additional preparatory and initial phases shall be conducted on the same definable feature of work if the quality of on-going work is unacceptable, if there are changes in the applicable CQC staff, onsite production supervision or work crew, if work on a definable feature is resumed after a substantial period of inactivity, or if other problems develop.

3.6.5 Definable Feature of Work: Definition and Discussion

A Definable Feature of Work (DFW) is a portion of work consisting of materials, equipment, supplies and procedures which are closely related to each other, have the same control and will be accomplished by the same work crew to completion. A DFW must be sufficiently small so that control of the work (i.e. communication of requirements to workers, inspection of materials and workmanship and correction of deficiencies) will be easily accomplished. Some examples are:

* Rough-in of electrical boxes and wiring methods

* Lighting fixtures, receptacles, and accessories

* Panelboards, circuit breakers and motors.

* Water supply piping, fittings and supports

* DWV piping, fittings and supports for plumbing

* Concrete reinforcement and formwork

* Concrete mixing, placement, curing and finishing

* Structural steel fabrication and erection, including welding and bolting; shop and field

* Steel deck and composite beam shear connectors; welding and fastening

* Testing Procedure for contaminated soil, materials and storage tank contents

* Setting up of decontamination area, exclusion zones and standard safety procedures for asbestos removal

* Asbestos removal and disposal procedures

* Preparation, removal and disposal of contaminated material

3.7 TESTS

3.7.1 Testing Procedure

The Contractor shall perform specified or required tests to verify that control measures are adequate to provide a product which conforms to contract requirements. Upon request, the Contractor shall furnish to the Government duplicate samples of test specimens for possible testing by the Government. Testing includes operation and/or acceptance tests when specified. The Contractor shall procure the services of a laboratory which has been assurance inspected by the Corps of Engineers within the last two years. The Contractor shall perform the following activities and record and provide the following data:

a. Verify that testing procedures comply with contract requirements.

b. Verify that facilities and testing equipment are available and comply with testing standards.

c. Check test instrument calibration data against certified standards.

d. Verify that recording forms and test identification control number system, including all of the test documentation requirements, have been prepared.

e. Results of all tests taken, both passing and failing tests, will be recorded on the CQC report for the date taken. Specification paragraph reference, location where tests were taken, and the sequential control number identifying the test will be given. If approved by the Contracting Officer, actual test reports may be submitted later with a reference to the test number and date taken. An information copy of tests performed by an off site or commercial test facility will be provided directly to the Contracting Officer. Failure to submit timely test reports as stated may result in nonpayment for related work performed and disapproval of the test facility for this contract.

3.7.2 Testing Laboratories

3.7.2.1 Capability Check

The Government reserves the right to check laboratory equipment and calibration in the proposed laboratory for compliance with the standards set forth in the contract specifications and to check the laboratory technician's testing procedures and techniques. Laboratories utilized for testing soils, concrete, asphalt, aggregate and steel shall meet criteria detailed in ASTM D 3740 and ASTM E 329. The Government will perform an assurance inspection of the laboratory which the contractor proposes to perform tests on soils, concrete, asphalt.

3.7.2.2 Capability Recheck

If the selected laboratory fails the capability check, the Contractor will be assessed a charge of $1500 to reimburse the Government for each succeeding recheck of the laboratory or the checking of a subsequently selected laboratory. Such costs will be deducted from the contract amount due the Contractor.

3.7.3 On-Site Laboratory

The Government reserves the right to utilize the Contractor's control testing laboratory and equipment to make assurance tests and to check the Contractor's testing procedures, techniques, and test results at no additional cost to the Government.

3.7.4 Furnishing or Transportation of Samples for Testing

Costs incidental to the transportation of samples or materials will be

borne by the Contractor. Samples of materials for test verification and acceptance testing by the Government shall be delivered to the Corps of Engineers Division Laboratory, as designated by the Government Representative. Coordination for each specific test, exact delivery location and dates will be made through the Area Office.

3.8 COMPLETION INSPECTION

3.8.1 Punch-Out Inspection

Near the completion of all work or any increment thereof established by a completion time stated in the Special Clause entitled "Commencement, Prosecution, and Completion of Work," or stated elsewhere in the specifications, the CQC System Manager shall conduct an inspection of the work and develop a "punch list" of items which do not conform to the approved drawings and specifications. Such a list of deficiencies shall be included in the CQC documentation, as required by paragraph DOCUMENTATION below, and shall include the estimated date by which the deficiencies will be corrected. The CQC System Manager or staff shall make a second inspection to ascertain that all deficiencies have been corrected. Once this is accomplished the Contractor shall notify the Government that the facility is ready for the Government's "Pre-final" inspection.

3.8.2 Pre-Final Inspection

The Government will perform this inspection to verify that the facility is ready to be occupied. A Government "Pre-final Punch List" will be developed as a result of this inspection. The Contractor's CQC System Manager shall ensure that all items on this list have been corrected and so notify the Government so that a "Final" inspection with the customer can be scheduled. Any items noted on the "Pre-final" inspection shall be corrected in a timely manner. These inspections and any deficiency corrections required by this paragraph will be accomplished within the time slated for completion of the entire work or any particular increment thereof if the project is divided into increments by separate completion dates.

3.8.3 Final Acceptance Inspection

The Contractor's Quality Control Inspection personnel, plus the superintendent or other primary management person and the contracting Officer's representative will be in attendance at this inspection. Additional Government personnel including, but not limited to, those from Base/Post Civil Facility Engineer user groups, and major commands may also be in attendance. The final acceptance inspection will be formally scheduled by the Contracting Officer based upon results of the Pre-Final Inspection. Notice will be given to the Contracting Officer at least 14 days prior to the final acceptance inspection and shall include the Contractor's assurance that all specific items previously identified to the Contractor as being acceptable, along with all remaining work performed under the contract, will be complete and acceptable by the date scheduled for the final acceptance inspection. Failure of the Contractor to have all contract work acceptably complete for this inspection will be cause for the Contracting Officer to bill the Contractor for the Government's additional inspection cost in accordance with the contract clause entitled "Inspection

of Construction".

3.9 DOCUMENTATION

The Contractor shall maintain current records providing factual evidence that required quality control activities and/or tests have been performed. These records shall include the work of subcontractors and suppliers and shall be on an acceptable form that includes, as a minimum, the following information:

a. Contractor/subcontractor and their area of responsibility.

b. Operating plant/equipment with hours worked, idle, or down for repair.

c. Work performed each day, giving location, description, and by whom. When Network Analysis (NAS) is used, identify each phase of work performed each day by NAS activity number.

d. Test and/or control activities performed with results and references to specifications/drawings requirements. The control phase should be identified (Preparatory, Initial, Follow-up). List deficiencies noted along with corrective action.

e. Quantity of materials received at the site with statement as to acceptability, storage, and reference to specifications/drawings requirements.

f. Submittals reviewed, with contract reference, by whom, and action taken.

g. Off-site surveillance activities, including actions taken.

h. Job safety evaluations stating what was checked, results, and instructions or corrective actions.

i. Instructions given/received and conflicts in plans and/or specifications.

j. Contractor's verification statement.

These records shall indicate a description of trades working on the project; the number of personnel working; weather conditions encountered; and any delays encountered. "N/A" shall be entered into any field for which no entry is intended. These records shall cover both conforming and deficient features and shall include a statement that equipment and materials incorporated in the work and workmanship comply with the contract. The original and one copy of these records in report form shall be furnished to the Government daily within 16 hours after the date(s) covered by the report, except that reports need not be submitted for days on which no work is performed. As a minimum, one report shall be prepared and submitted for every seven days of no work and on the last day of a no work period. All calendar days shall be accounted for throughout the life of the contract. The first report following a day of no work shall be for

that day only. Reports shall be signed and dated by the CQC System Manager. The report from the CQC System Manager shall include copies of test reports and copies of reports prepared by all subordinate quality control personnel. All documentation is expected to be literate, legible and complete.

3.10 SAMPLE FORMS

The Resident Management System (RMS) is required to be used by the contractor for the QC System as indicated elsewhere in this contract. Contractor shall generate all reports in the RMS System.

a. The 2-page form at the end of the section shall be used for the basic CQC Report. CQC personnel shall attach continuation sheets as required for any entries which cannot fit on the basic form. Preparatory and Initial Inspections, when performed, shall be indicated on the basic CQC report and minutes for each inspection shall be attached. Minutes will consist of a list of specific requirements for materials, procedures or equipment to be employed and shall also include any understandings reached or items of special importance discussed.

b. In addition, outstanding deficiencies shall be listed on the form "List of Outstanding Deficiencies" at the end of this section and shall be attached to each CQC report. As deficiencies are corrected, they are to be acknowledged on the basic CQC report and shall be deleted from the list.

c. Form at the end of this section entitled "CQC Test Report List" shall be used by the Contractor to track testing to be done as the project progresses, and also to summarize the Contractor's Quality Control testing to be reported on the CQC Plan.

d. Form "Record of Preparatory and Initial Inspections" at the end of this section shall be used by the Contractor to track Preparatory and Initial inspections as the project progresses and also to summarize these required inspections as part of the CQC Plan.

e. Additional reporting forms pertaining to specialized activities may be included herein or elsewhere in the contract, and shall be used for reporting as indicated.

3.11 NOTIFICATION OF NONCOMPLIANCE

The Contracting Officer will notify the Contractor of any detected noncompliance with the foregoing requirements. The Contractor shall take immediate corrective action after receipt of such notice. Such notice, when delivered to the Contractor at the work site, shall be deemed sufficient for the purpose of notification. If the Contractor fails or refuses to comply promptly, the Contracting Officer may issue an order stopping all or part of the work until satisfactory corrective action has been taken. No part of the time lost due to such stop orders shall be made the subject of claim for extension of time or for excess costs or damages by the Contractor. Deficiencies cited and verbal instructions given to the

Contractor by the Government Representative shall be entered into that day's CQC Report.

(FORMS FOLLOW)

-- End of Section --

LIST OF OUTSTANDING DEFICIENCIES

SH_____ OF _____ DATE:_____

PROJECT TITLE:_____ CONTRACTOR:_____

LOCATION:_____ CQC REPORT#_____ CONTRACT #:_____

SPEC REF OR DWG#	LOCATION ON PROJECT	DESCRIPTION OF DEFICIENCY	DATE FOUND	DATE TO BE CORRECTED	DATE CORRECTED	REMARKS

NOTE: THIS FORM SHALL BE USED BY THE CONTRACTOR TO TRACK OUTSTANDING CONSTRUCTION DEFICIENCIES

RECORD OF PREPARATORY AND INITIAL INSPECTIONS

DATE OF INSP	TYPE OF INSP	DEFINABLE FEATURE OF WORK (DESCRIBE)	REPORT NOS		PERSONS ATTENDING INSP	WAS MATL&/OR EQUIPMENT PHYSICALLY INSPECTED ?
			QA	QC		

NAD FORM 826
22 JULY 86

NOTE:THIS FORM SHALL BE USED BY THE CONTRACTOR TO TRACK PREP/INIT INSP'S
ATTACH ADDITIONAL RESULTS OR COMMENTS AS REQUIRED

CQC REPORT #_____ Date_____

1. Project Title:_____

Location: _____Contract No.:_____

2. List Contractors and Subs Working This Day and Areas of responsibility of each

_____

_____

_____

_____

3. Weather:

_____

_____

4.Description and Location of Work of the Project (Also indicate days of no work and reasons for delay)

_____

_____

_____

_____

_____

_____

5. Labor and Equipment Breakdown by Trade (Attach Continuation)

_____

_____

_____

_____

6. Preparatory Phase Inspections Held (See Attached Minutes)

_____

_____

_____

_____

_____

7. Initial Phase Inspections Held (See attached minutes)

_____

_____

_____

_____

_____

8. Follow-Up Phase Inspections Performed, Results and Corrective Actions Taken

9. Job Safety. Indicate What Was Checked, Results,Instructions Received and Corrective Actions:

10. Additional Activities and Remarks (Check Appropriate Box)

[ ] a. Testing Performed. Attach Results.
[ ] b. Verbal Instructions Received.
[ ] c. Submittal Actions.
[ ] d. Outstanding Deficiencies. See Attached List
[ ] e. Delivery of Equipment and Materials.
[ ] f. Misc/Remarks.

(Use Space Below To Discribe Checked Items)

11. Contractor's Verification: "The above report and attachments are complete and all supplies, Materials, Equipment and Workmanship incorporated into the work are in full compliance with the contract except as noted".

Signed_____ Date_____
CQC Representative

CQC TEST REPORT LIST

CQC REPORT#_____ SH_____ OF _____ DATE:_____

CONTRACTOR:_____ CONTRACT #:_____

PROJECT TITLE:_____ LOCATION:_____

SPEC REF OR DWG#	TYPE OF TEST	DATE PERFORMED	RESULTS	REMARKS

NOTE: THIS FORM SHALL BE USED BY THE CONTRACTOR TO TRACK CQC TESTING.PROVIDE ATTACHMENTS AS REQUIRED.

SECTION 01452

TESTING FOR MECHANICAL AND ELECTRICAL SYSTEMS

PART 1 GENERAL

1.1 APPLICABILITY

This Section applies to all mechanical and electrical systems and all systems using electromagnetically driven equipment, pneumatic or electronic systems; high and low voltage electrical distribution systems (except branch panels) and to any system which incorporates this Section into other parts of the specification by reference. For purposes of this Section a "system" is an entity comprised of a series of closely related interdependent components and which is capable of interdependent performance of a useful function. System components shall include all software and programming as applicable for the system. Some typical examples include:

a. Independently functioning HVAC Systems.

b. Fire Alarm Systems.

c. Public Address Systems.

d. Sprinkler Systems including alarms.

e. Telephone Systems including line protectors, splices, cables, switching equipment, outlets and instruments.

f. Intrusion Detection System.

g. High Voltage Equipment including cable, splices, switchgear, relays, circuit breakers, fuses, transformers, instruments, etc.

h. Low Voltage Switchgear including incoming and outgoing feeders, circuit protection and all accessories.

i. Communication Systems.

1.2 SUBMITTALS

Government approval is required for submittals with a "GA" designation; submittals having an "FIO" designation are for information only. Unless otherwise indicated, primary reviewer for these submittals will be the Contracting Officer. The following shall be submitted in accordance with Section 01330 SUBMITTAL PROCEDURES:

SD-07 Schedules

Test Plans; GA.

Test Plans: Not later than sixty days after the Notice to Proceed, in accordance with Section 01330, SUBMITTAL PROCEDURES, and other paragraphs of the technical provisions, the Contractor shall submit a list for approval consisting of all systems for which test plans are required. This list will be reviewed by the Government and any systems found to be missing will be required to be added by the Contractor, and appropriate test plans submitted. No work will be permitted on any of the above systems until this list is submitted.

The Contractor shall develop test plans and schedule operational testing for the systems in the approved list. Testing shall be in accordance with the requirements in the appropriate technical provisions and shall include as a minimum the requirements below. All testing required by applicable codes, standards, utility companies, manufacturers, suppliers, etc. shall be incorporated into the Contractor's test plans. Test plans shall list all equipment required to perform the tests, and any Government support required. It shall be in sufficient detail to permit a step-by-step approach to the test and to demonstrate that the systems operate as intended by the Contract Documents. It shall describe as a minimum:

a. What system is being tested including a listing of all components to be tested.

b. What individual or organization will perform testing, who will certify the tests, and qualifications of test personnel.

c. A step-by-step narrative of the testing procedure to be used to demonstrate contract compliance including all Government standards, such as "sequence of controls", "ASTM Standard XXX"; or "IEEE Standard XXX", etc.

d. What testing equipment will be utilized.

e. What operator interaction is required.

f. What results are to be expected.

g. Seasonal limitations, if any, including dates or proposed testing.

h. A complete schematic diagram (electrical, pneumatic) showing all components, and block diagram.

i. A checklist shall be developed to be used during the operational test.

Test plans shall be submitted for approval for all systems contained on the list submitted per above. It is also required that the Contractor submit all test plans as soon as possible so that the progress of the project and corresponding payments will proceed on schedule.

1.3 TESTING PROCESS

Outlined below are a number of events relating to the status of the test plan and testing. The corresponding percentages indicate the maximum percentage of the value of the system which will be permitted to be installed after the successful completion of the corresponding event indicated, for all systems to which this Section applies. Events must be completed sequentially. Any work performed in excess of the permitted percentages will be at the Contractor's own risk and will not be paid until the event corresponding to the percentage of system value permitted to be installed is successfully completed:

Even	Max. % of System Value Permitted to be Installed
1. Contractor has submitted list of systems that require test plans to be approved, and system work is ongoing but no test plan submitted.	50%
2. Test Plan Submitted:	65%
3. *Test Plan Approved:	80%
4. Successful Completion of tests including submission of required documents, reports (i.e. balancing reports for all HVAC systems), Operation and Maintenance Manuals spare parts, and spare parts data:	**100%

*The Government will process the submittal in accordance with the time frames indicated in the specification Section 01330, SUBMITTAL PROCEDURES. If the test plan is disapproved the Government has an additional 30 days to review the resubmittal from the date it receives the resubmittal.

**If a system involves both heating and cooling modes and one mode has been successfully tested this percentage shall be reduced to 90% until the testing is completed.

The Contractor may proceed with events as indicated in the above table for each system separately.

1.4 TESTING REQUIREMENTS

Operational tests including performance tests shall be conducted for an entire system, not component parts only. Tests may be conducted only after an entire system has been completely installed. Contractor shall provide a minimum of 14 days notice to the Contracting Officer of scheduled tests. This notice must include the Contractor's assurance that all installed work previously identified to the Contractor as being unacceptable along with all remaining work associated with the respective system will be complete and acceptable by the date scheduled for the operational test. Failure of the Contractor to have all contract work acceptably complete for this test will be cause for the Contracting Officer to bill the Contractor for the Government's additional inspection costs.

For each system the Contractor shall obtain the services of an experienced professional who shall certify that the operational test was conducted in

accordance with the approved test plan and the results of this test meet all the contract requirements. These individuals must have a minimum eight years experience in the testing of the particular system being tested and shall also meet testing qualifications (if any) set forth in other technical sections of the contract specifications.

When considering the value of a system for payment purposes the following components shall be counted as part of a "System": All electro-magnetically driven equipment; pneumatic, electric or electronic control system; gauges, dampers, elements, logic/processors, CPU's, ducts, insulation, wiring, conduit, switchgear, and all other mechanical or electrical components, devices or equipment which are essential to the proper function of the system such as pumps, motors, air-handling units, chillers, cooling towers, etc. Software programs and any refrigerants are also considered "parts" of a system.

The requirements contained in this Section supplement other testing requirements contained in the Contract Documents. If a conflict exists between the requirements of this Section and other parts of the Contract Documents, the requirements of this Section shall take precedence.

PART 2 NOT USED

PART 3 NOT USED

-- End of Section --

SECTION 01453

CONTRACTOR WARRANTY MANAGEMENT

PART 1 GENERAL

1.1 DESCRIPTION

General: In order to insure that the Government systematically receives all warranties of construction, equipment and systems to which it is entitled, the contractor shall execute all actions as required by above references and as contained herein.

1.1.1 Post-Completion Inspections:

For purposes of management of construction warranties, the Government conducts four and nine month warranty inspections with using agencies. The Contractor is encouraged to attend these inspections in order to better manage any warranty items for which it may be responsible.

1.1.2 Tagging of Extended Warranty Items:

The Contractor shall install tags to identify items protected by extended warranty, i.e. longer than the one year general warranty of construction.
The tags shall be minimum 3 inches by 5 inches in size, machine-printed in minimum 14-point type, and shall be weatherproof. Tags shall be attached to equipment if accessible or to accessible control panel, etc. As a minimum, tags shall indicate the following information:

"Extended Warranty Item:"

a. Name of Item
b. Name of System with which associated, number designation within system, or other identifier
c. Model Number
d. Serial Number
e. Start and end Dates of Warranty
f. Contract number
g. Contract Name
h. Contractor Name
i. Point of Contact name, organization and telephone number.

1.1.3 Posting of Instructions:

In addition to any posting of operating procedures as may be required elsewhere in this contract, any equipment or system for which proper operation or maintenance is critical in order to preserve warranties, prevent damage, or for reasons of safety shall have proper operating procedures posted near the equipment or near the operating point.

Instructions shall be protected by 1/16 inch thick plastic sheet. As a minimum such equipment or system shall include:

a. Electrical Substations
b. Transformers
. Electrical Generators
d. Major HVAC System components including chillers, air-handlers, fans, etc.
e. HVAC Control Panel
f. Boilers
g. Air Compressors

1.1.4 Warranty Meeting

At least 14 days prior to the 80% completion point of this contract (or deliverable phase thereof), the contractor will notify the Government representative for the purpose of scheduling a meeting to clarify understandings of responsibilities with respect to warranties to which the Government is entitled. The Government and contractor shall attend the warranty meeting, as well as any subcontractors, or suppliers involved in the warranty process. The Warranty Plan (below) shall have already been submitted and approved by the Government before the warranty meeting can take place, and shall be the basis of the meeting's agenda.

1.1.5 Warranty Plan

At least 30 days before the planned warranty meeting, the contractor shall submit a warranty plan for Government approval per section "Submittals". The Warranty Plan shall include all required actions and documents to assure that the Government receives all warranties to which it is entitled. The plan shall be in narrative form and contain sufficient detail to render it suitable for use by future maintenance and repair personnel, whether tradesmen, or of engineering background, not necessarily familiar with this contract. The tern "status" as indicated below shall include due date and whether item has been submitted or was accomplished. As a minimum the plan shall indicate:

a. Roles and responsibilities of all personnel associated with the warranty process, including points of contact and telephone numbers within the organizations of the contractor's, subcontractors or suppliers involved.

b. Listing and status of O&M manuals and As-built drawings, and expected delivery dates.

c. Listing and status of all training to be provided to Government personnel, whether specified by contract or required by manufacturers.

d. Listing and status of delivery of all Certificates of Warranty for extended warranty items, to include roofs, HVAC balancing, pumps, motors, transformers, and for all commissioned systems such as fire protection and alarm systems, sprinkler systems, lightning protection systems, etc.

e. A list for each warranted equipment, item, feature of construction or system indicating:

Name of item

Model and serial numbers.

Location where installed

Names of manufacturers or, suppliers and phone numbers.

Names addresses and telephone numbers of sources of spare parts

Warranties and terms of warranty. This shall include one-year overall warranty of construction as required by ref. 1.a. Clearly indicate which items have extended warranties.

Cross-reference to warranty certificates as applicable

Starting point and duration of warranty period.

Summary of maintenance procedures required to continue the warranty in force.

Cross-reference to specific pertinent Operation and Maintenance manuals

Organization, names and phone numbers of persons to call for warranty service

Typical response time and repair time expected for various warranted equipment

f. The contractor's plans for attendance at the Four and Nine month post-construction warranty inspections conducted by the Government.

g. Procedure and status of tagging of all equipment covered by extended warranties.

h. Copies of instructions to be posted near selected pieces of equipment where operation is critical for warranty and/or safety reasons

PART 2 PRODUCTS

Not Used

PART 3 EXECUTION

Not Used

-- End of Section --

SECTION 01500

TEMPORARY CONSTRUCTION FACILITIES

PART 1 GENERAL

1.1 SUBMITTALS

Government approval is required for submittals with a "GA" designation; submittals having an "FIO" designation are for information only. Unless otherwise indicated, primary reviewer for these submittals will be the Contracting Officer. The following shall be submitted in accordance with Section 01330 SUBMITTAL PROCEDURES:

SD-04 Drawings

Site Plan; GA

SD-09 Reports

Weatherprotection Procedure Reports; FIO

1.2 GENERAL REQUIREMENTS

1.2.1 Site Plan

The Contractor shall prepare a site plan indicating the proposed location and dimensions of any area to be fenced and used by the Contractor, the number of trailers to be used, avenues of ingress/egress to the fenced area and details of the fence installation. Any areas which may have to be graveled to prevent the tracking of mud shall also be identified. The Contractor shall also indicate if the use of a supplemental or other staging area is desired.

Adequate erosion and sediment control facilities shall be indicated on the Site Plan. Comply with requirements of Section 01568, EROSION AND SEDIMENT CONTROL.

1.2.2 Identification of Employees

The Contractor shall be responsible for furnishing to each employee, and for requiring each employee engaged on the work to display, identification as approved and directed by the Contracting Officer. Prescribed identification shall immediately be delivered to the Contracting Officer for cancellation upon release of any employee. When required, the Contractor shall obtain and provide fingerprints of persons employed on the project. Contractor and subcontractor personnel shall wear identifying markings on hard hats clearly identifying the company for whom the employee works.

1.3 AVAILABILITY AND USE OF UTILITY SERVICES

1.3.1 Sanitation

The Contractor shall provide and maintain within the construction area minimum field-type sanitary facilities approved by the Contracting Officer. Government toilet facilities will not be available to Contractor's personnel.

1.3.2 Telephone

The Contractor shall make arrangements and pay all costs for telephone facilities desired.

1.3.3 Temporary Utilities and Weather Protection

1.3.3.1 Definitions:

As used in this Article, the following terms are used with the specific meanings given below.

a. Construction Electric: The furnishing, installing, maintenance, and removal of all wiring, fusing, switches, outlets, lamps and accessory electrical devices required to furnish lighting and power needed by all construction trades prior to the time such required lighting and power can be furnished through the permanent electrical distribution system. Include also electrical service and facilities at temporary field office and protective night lighting.

b. Construction Heating and Ventilating: The furnishing, installing, operation, maintenance, and removal of all heating devices and all ventilating devices required to provide proper temperature and/or ventilation conditions for all construction activities, prior to the time that the permanent heating and ventilating system can be used for that purpose. Include also heating and ventilating of temporary field office.

c. Construction Water: The furnishing, installing, maintenance, and removal of all water piping, valving, hose bibs, etc. required for all construction trades prior to the time when such requirements can be satisfied by utilizing the permanent supply piping.

d. Interim Electric: The operation and maintenance of the permanent electrical system; from the end of the Construction Electric phase to the Date of Substantial Completion of the Work.

e. Interim Heating and Ventilating: The operation and maintenance of the permanent heating and/or ventilating system from the end of the Construction Heating and Ventilating phase to the Date of Substantial Completion of the Work.

f. Water Access Point: A point, within the Project area, at which water is available for use during the Construction Water phase.

g. Weather Protection: The furnishing, installing, maintenance and removal of temporary closures, covers, shields and any other weather protection devices as required to protect work in place and permit construction to proceed during cold or inclement weather.

1.3.3.2 Weather Protection Standard

The following weather protection standards are hereby incorporated into this specification, and shall be considered supplementary to the specified temporary heating and temporary enclosure requirements. The Contractor is required to provide weather protection to allow building construction to be carried on during the calendar year, and to protect existing structures and inhabited structures where demolition operations are proceeding.

a. The Contractor shall provide and install weather protection.

b. Temperature at the working surface shall be at least forty degrees Fahrenheit (40 degrees F.). This provision does not supersede any specific greater requirements for methods of construction or curing of materials.

c. Weather protection materials, equipment, and the installation thereof, shall comply with all safety rules and regulations including provisions for adequate ventilation and fire protection devices.

d. At completion of work, the Contractor shall remove temporary weather protection and restore all surfaces to first class condition.

e. The Contractor may choose, if the Contracting Officer approves, to use the permanent heating system for temporary heat after the building is enclosed and the system has been tested and is ready to operate.

f. The Contractor shall thoroughly clean and restore to first class condition, acceptable to the Contracting Officer, all portions of the permanent heating system that are used for heating during construction,

g. Use of the permanent heating system for weather protection shall not affect any heating system guarantee that may be due to the Government; such guarantee shall begin to run only when the Government accepts the building.

h. Weatherprotection Procedure Reports: Within thirty calendar days after Notice to Proceed, the Contractor shall submit in writing to Contracting Officer for approval, three copies of it's proposed plan for weather protection. The Contractor shall furnish and install accurate Fahrenheit thermometers at places designated by the Contracting Officer to determine whether the required temperature is being maintained.

1.3.3.3 Temporary Covers and Enclosures:

Except as otherwise specified herein below, all costs of closing openings in new or existing construction where opened to the weather, including temporary covers and enclosures, shall be borne by the Contractor. Enclosures must be built around various portions of the new construction and exterior openings in the existing building as the work progresses if, and as necessary to totally insure against the intrusion of rain, snow, and other moisture which might damage new materials or finishes and as necessary to maintain the minimum temperatures specified.

a. Where roofs, exterior walls, windows, or other elements of new buildings or existing structures providing weather protection are to be temporarily opened to the weather, they shall be fully enclosed or covered with securely attached and well draining enclosures whenever inclement weather is at and or is threatening, to assure absolute weather protection. Any and all damage to the new or existing buildings or structures, including all materials and finishes thereon, caused by inadequate protection shall be made good by the Contractor without further cost to the Government.

b. All such weathertight enclosures shall provide a reasonable open area to permit drying of new, wet materials while at the same time making it possible to maintain the required interior temperatures. The Contractor shall provide sufficient continuous ventilation until time that the "wet" work of the project has dried sufficiently to receive finished woodwork and other materials subject to moisture damage, at which time the ventilation shall be maintained at approximately the anticipated conditions of final use of the project.

c. The permanent doors and frames shall not be used as temporary enclosures prior to time of delivery of finished woodwork or acoustical materials. Temporary wood or plywood doors with wood frames and proper hardware to make the doors self closing shall be provided, instead, at the door openings.

d. As parts of the temporary enclosures, the permanent doors, windows, and fixed glass may be used, provided sufficient ventilation area is available and that extreme care is taken to prevent damage to same. Where available ventilation area is limited, intake and discharge fans may be used to increase air movement through the construction areas. Before delivery of finished woodwork or other materials subject to moisture damage, the permanent windows, roof accessories, fixed glass, doors, and entrances must be in place. Sparkproof fans shall also be provided to remove toxic or obnoxious fumes from enclosed areas as may be required.

e. Once temporary enclosures are in place, a temperature of at least 55 degrees F. shall be maintained within all interior work spaces under construction; and 70 degrees F. at spaces occupied by the Government.

f. The Contractor shall pay for and be responsible for the weather protection of his tools, devices, equipment, appliances and appurtenances to be used in the accomplishment of his work and for the weather protection of materials furnished by him.

g. Protection and heating of aggregates and water for concrete and mortars shall be the responsibility and at the expense of the Contractor.

h. Construction Water Facilities, furnished and installed by the Contractor, shall be protected against freezing by the Contractor at his own expense.

1.3.3.4 Construction Heating:

The Contractor shall provide at his own expense all Construction Heating and Ventilating as defined above. Portable heating units shall be of sufficient capacity and number and shall be so located that damage to any part of the project from low temperature will be prevented and that concrete, masonry, and other components requiring curing shall be properly cured. The Contractor shall pay for all fuel and electrical energy required for Construction Heating and Ventilating.

a. Heaters for temporary heat shall be temporary steam generators, forced air heaters, or other type heaters located outside the building or vented to the outside of the building. Type(s) shall be such as to not damage or stain construction. Heaters must be UL approved.

b. At no time will oil burning "salamander" type heaters be used, nor will non-vented, open flame heaters be used inside the building once "closed-in".

c. Propane-type heaters shall not be used at anytime within area of the building or near stockpiles of combustible materials.

1.3.3.5 Interim Heating and Ventilating:

The Contractor shall be responsible for Interim Heating and Ventilating as defined above and further specified as follows.

a. Use of the new, permanent, heating and ventilating equipment may, at the Contractor's option, be used for Interim Heating and Ventilating.

b. The permanent heating and ventilating system in a given area, including permanent wiring to a permanent power source, shall be completely installed as designed and shall have received all legally required inspections and approvals before the system may be used in such area.

c. Units of the permanent heating and ventilating system which are designed to be used with filters shall be equipped with proper

filters before being placed in use for Interim Heating and Ventilating. Such units shall not be used without filters. Filters shall be cleaned or changed as required to maintain proper operation of the equipment.

d. At the termination of the use of the permanent system for Interim Heating and Ventilating, the system shall be cleaned, equipped with new filters, new belts if required, and any damage repaired or replaced.

e. The Contractor shall include an amount in his contract price to pay for services of special attendant qualified to operate and maintain the permanent heating system for temporary heat during the Interim Heating and Ventilating period and until the system has been accepted by the Government.

f. The Contractor shall pay for all fuel and electrical energy required for Interim Heating and Ventilating. The Government will pay all charges for water, fuel, and electrical energy used on the Project for operation of the permanent heating system after the Date of Substantial Completion of the Work.

g. The furnishing of water, fuel, and electrical energy by the Government shall be conditional upon the Contractor being conservative and prudent in its use.

1.3.3.6 Construction Water:

The Contractor shall be responsible for and pay for all facilities for Construction Water as defined above and further specified as follows. The water used will be paid for by the Contractor.

a. Except under unusual circumstances, when otherwise specified or approved by the Contracting Officer all construction water shall be of potable quality.

b. Construction water shall be provided by the Government at points of access determined by the Government.

c. Each Access Point shall be equipped with two 3/4 in. hose bibs, unless otherwise indicated on Drawings.

d. The Contractor shall pay for and be responsible for the protection of each access point and construction water conveyance which he installs, from freezing and other damage.

e. The Contractor shall provide temporary hose bibs on the permanent water piping for use from the installation and conditional acceptance by the Contracting Officer of water piping to the Date of Substantial Completion.

f. Refer to Section 00800, SPECIAL CONTRACT REQUIREMENTS for charges to the Contractor for use of water.

1.3.3.7 Construction Electricity:

The Contractor shall pay for and be responsible for Construction Electric as defined above and further specified in Section 00800, SPECIAL CONTRACT REQUIREMENTS, and as follows.

A. The Contractor shall pay for all electrical energy used on the Project from the beginning of construction operations to the Date of Substantial Completion of the Work. The Government will pay for all electrical energy drawn from normal metered building supply used on the Project after the Date of Substantial Completion of the Work. The Contractor shall install a separate meter for recording the Construction Electricity.

B. Responsibility of compliance with local, state and national codes for installation of the Construction Electric service shall be borne by the Contractor.

C. Replacement lamps shall be provided by the Contractor during the Construction Electric period. All lamps in permanent fixtures which have been used during the Interim Electric period shall be replaced with new lamps by the Contractor at his expense just prior to the Date of Substantial Completion.

D. The following Construction Electricity shall be included by the Contractor in his price. The Contractor having requirements for power, lighting, or service other than those provided herein, shall make the necessary arrangements to obtain such power, lighting, or service at his own expense.

E. The Contractor shall obtain all necessary permits and shall connect to public utility line as a source for temporary electrical power, shall furnish and install the temporary electrical power and lighting systems, and shall pay for all labor, materials, and equipment required therefor.

F. The Contractor shall provide illumination levels as required by EM385-1-1. The Contractor shall furnish and install a feeder, or feeders, of sufficient capacity for the requirements of each floor. Temporary lighting shall be based on the following requirements:

1. Rooms or spaces under 250 sq. ft.: Two (2) 100 watt lamps.

2. Rooms or spaces over 250 sq. ft. and under 500 sq. ft.: Four (4) 100-watt lamps.

3. Rooms or spaces 500 sq. ft. and over: Two (2) 200 watt lamps for spaces 500 sq. ft. to 1000 sq. ft. and two (2) 200-watt lamps for every 1000 sq. ft. or fraction thereof.

4. Sufficient additional wiring outlets and lamps shall be installed to insure proper lighting in stairwells, corridors and passage areas.

5. Temporary power, in addition to the lighting requirements, shall be provided throughout the building for electrically operated tools, based on a minimum of 0.50 watts per sq. ft. Temporary power shall be limited to 120 volts with a maximum of 15 amps usage including power tools.

6. Outlets shall be located at convenient points so that extension cords of not over 50 feet in length will reach all work requiring light or power.

G. All necessary cables, load centers, switches and accessories required for the temporary light and power installation shall be provided and installed by the Contractor.

H. The Contractor shall furnish and install all lamps, both initial and replacement until the date of Substantial Completion.

I. The provisions of the National Electric Code shall be strictly complied, and the following precautions shall be taken:

1. Open conductors shall be fastened at ceiling height at minimum of 10 ft. intervals. Conductors may not be laid on the floor, and receptacles or fixed equipment circuits shall contain a separate equipment grounding conductor if run as open wiring. Receptacles shall be of the grounding type. Branch circuits, unless installed in a complete metallic conductor and receptacles electrically connected to the grounding conductor. No bare conductors nor earth returns shall be used for wiring of any temporary circuits. Grounding circuits shall never be interrupted.

2. All 15 ampere and 20 ampere receptacle outlets on single phase circuits which are used for construction purposes shall have approved ground-fault circuit protection for personnel, as required by the New York Electrical Code.

1.3.3.8 Interim Electricity:

The Contractor shall be responsible for Interim Electricity as defined above and further specified as follows.

a. The permanent electric power and lighting system in a given area shall be completely installed as designed before the system may be used in such area.

b. At the termination of the use of the permanent electrical light and power system for interim electric, all panelboards shall be inspected and cleaned, and all permanent lighting fixtures which have been used shall be thoroughly cleaned and provided with new lamps, bulbs, fluorescent tubes, etc., to provide like-new performance.

c. The Contractor shall list all power requirements and equuipment proposed to be connected to the permanent power and lighting

systems for each circuit in each panel board. Submit data to Contractying Officer. Prevent usage until approved by Contracting Officer in Writing.

1.4 BULLETIN BOARD, PROJECT SIGN, AND PROJECT SAFETY SIGN

1.4.1 Bulletin Board

Immediately upon beginning of work, the Contractor shall provide a weatherproof glass-covered bulletin board not less than 36 by 48 inches in size for displaying the Equal Employment Opportunity poster, a copy of the wage decision contained in the contract, Wage Rate Information poster, and other information approved by the Contracting Officer. The bulletin board shall be located at the project site in a conspicuous place easily accessible to all employees, as approved by the Contracting Officer. Legible copies of the aforementioned data shall be displayed until work is completed. Upon completion of work the bulletin board shall be removed by and remain the property of the Contractor.

1.4.2 Project and Safety Signs

The requirements for the signs, their content, and location shall be as indicated in Section 00800, and as indicated on Drawings. The signs shall be erected within 60 days after receipt of the notice to proceed. The data required by the safety sign shall be corrected daily, with light colored metallic or non-metallic numerals. Upon completion of the project, the signs shall be removed from the site.

1.5 PROTECTION AND MAINTENANCE OF TRAFFIC

During construction the Contractor shall provide access and temporary relocated roads as necessary to maintain traffic. The Contractor shall maintain and protect traffic on all affected roads during the construction period except as otherwise specifically directed by the Contracting Officer. Measures for the protection and diversion of traffic, including the provision of watchmen and flagmen, erection of barricades, placing of lights around and in front of equipment and the work, and the erection and maintenance of adequate warning, danger, and direction signs, shall be as required by the State and local authorities having jurisdiction. The traveling public shall be protected from damage to person and property. The Contractor's traffic on roads selected for hauling material to and from the site shall interfere as little as possible with public traffic. The Contractor shall investigate the adequacy of existing roads and the allowable load limit on these roads. The Contractor shall be responsible for the repair of any damage to roads caused by construction operations.

1.5.1 Haul Roads

The Contractor shall, at its own expense, construct access and haul roads necessary for proper prosecution of the work under this contract. Haul roads shall be constructed with suitable grades and widths; sharp curves, blind corners, and dangerous cross traffic shall be avoided. The Contractor shall provide necessary lighting, signs, barricades, and distinctive markings for the safe movement of traffic. The method of dust

control, although optional, shall be adequate to ensure safe operation at all times. Location, grade, width, and alignment of construction and hauling roads shall be subject to approval by the Contracting Officer. Lighting shall be adequate to assure full and clear visibility for full width of haul road and work areas during any night work operations. Upon completion of the work, haul roads designated by the Contracting Officer shall be removed. Comply with requirements specified under Section 00800, SPECIAL CONTRACT REQUIREMENTS.

1.5.2 Barricades

The Contractor shall erect and maintain temporary barricades to limit public access to hazardous areas. Such barricades shall be required whenever safe public access to paved areas such as roads, parking areas or sidewalks is prevented by construction activities or as otherwise necessary to ensure the safety of both pedestrian and vehicular traffic. Barricades shall be securely placed, clearly visible with adequate illumination to provide sufficient visual warning of the hazard during both day and night under all weather conditions.

1.5.3 Barricades, Warning Signs, and Lights:

Provide and maintain barricades, warning signs, warning lights, railings, walkways, and the like. Paint signs and barricades with appropriate colors, graphics, and warnings to inform public and job-site personnel of hazards.

1.6 CONTRACTOR'S TEMPORARY FACILITIES

1.6.1 Administrative Field Offices

The Contractor shall provide and maintain administrative field office facilities within the construction area at the designated site. Government office and warehouse facilities will not be available to the Contractor.

1.6.2 Appearance of Trailers

Trailers utilized by the Contractor for administrative or material storage purposes shall present a clean and neat exterior appearance and shall be in a state of good repair. Trailers which, in the opinion of the Contracting Officer, require exterior painting or maintenance will not be allowed on the military property. The Contracting Officer shall paint the exterior of temporary facilities as ordered by the Contracting Officer at no additional cost to the Government.

1.6.3 Maintenance of Storage Area

Storage areas shall be kept in a state of good repair and neat. Should the Contractor elect to traverse, with construction equipment or other vehicles, grassed or unpaved areas which are not established roadways, such areas shall be covered with a layer of gravel as necessary to prevent rutting and the tracking of mud onto paved or established roadways; gravel gradation shall be at the Contractor's discretion. Grass located within the boundaries of the construction site shall be mowed for the duration of

the project. Grass and vegetation along fences, buildings, under trailers, and in areas not accessible to mowers shall be edged or trimmed neatly.

1.6.4 Security Provisions

Adequate outside security lighting shall be provided at the Contractor's temporary facilities. The Contractor shall be responsible for the security of his own equipment.

1.7 GOVERNMENT FIELD OFFICE

1.7.1 Contracting Officer's Office

The Contractor shall provide the Contracting Officer with a field office as specified under Section 00800, SPECIAL CONTRACT REQUIREMENTS. Utilities shall be connected and disconnected in accordance with local codes and to the satisfaction of the Contracting Officer.

1.8 TEMPORARY PROJECT CONSTRUCTION FENCING

1.8.1 Construction Fence

Construction fence was erected during Phase 1 construction, and left in place at the conclusion of Phase 1. Repair and relocate construction fencing as required for the work of this Contract. Prior to start of work at the Project site, the 6 ft. high chain-link enclosure fence with suitably locked entrance gates shall be repaired, relocated and refurbished as required. Locate fence to enclose substantially entire Project site, as indicated on Drawings. Locate vehicular entrance gates in suitable relation to construction facilities; and to avoid interference with traffic on public thoroughfares.

A. Construct chain link fence in accordance with industry standards and as detailed.

B. Posts shall have concrete bases in soil as indicated on Drawings. Where rock prevents provision of concrete base as required, provide drilled or bored hole in rock for insertion of post. Drilled or bored hole shall shall be of sufficient size to insert and anchor post not less than 18 in. deep. Include all such drilled, bored and concrete bases in the Contract price.

C. Provide heavy hasps and padlocks, keyed alike, for each gate. Provide six (6) sets of keys to the Contracting Officer to facilitate emergency or security personnel access.

D. Construction fence shall be removed at end of Project. Fill all holes and patch pavements etc. after removal of fence is complete, to the satisfaction of the Contracting Officer.

1.9 CLEANUP

Construction debris, waste materials, packaging material and the like shall be removed from the work site daily. Any dirt or mud which is tracked onto

paved or surfaced roadways shall be cleaned away immediately and in no case shall the Contractor leave the site at the close of work without verifying that all dirt or mud has been removed from any paved surface beyond the limits of construction. Any costs related to this cleanup shall be borne by the Contractor. Materials resulting from demolition activities which are salvageable shall be stored within the fenced area described above or at the supplemental storage area. Stored material not in trailers, whether new or salvaged, shall be neatly stacked when stored.

1.10 RESTORATION OF STAGING AREA

Upon completion of the project and after removal of trailers, materials, and equipment from within the fenced area, the fence shall be removed and will become the property of the Contractor. Areas used by the Contractor for the storage of equipment or material, or other use, shall be restored to the original or better condition. Gravel used to traverse grassed areas shall be removed and the area restored to its original condition, including top soil and seeding as necessary to comply with the requirements of the Contract Documents.

1.11 Temporary Fire Protection

Provide and maintain suitable fire protection equipment and services. Establish procedures for fire protection for welding and other potentially hazardous construction operations. Ascertain and comply with requirements of Project insurance carrier, EM 385-1-1, The United States Military Academy, Town of West Point Fire Department and the State of New York Fire Marshal. Permanent fire protection system may be activated to meet these requirements. Replace fusible link heads and other expended or discharged components at time of Substantial Completion.

A. Locate temporary portable fire extinguishers in convenient locations, not less than one extinguisher per floor.

B. Store combustible materials in containers in fire-safe locations.

C. Maintain unobstructed access to fire extinguishers, fire hydrants, temporary fire protection facilities, stairways, and other access routes.

1.12 Water Control

The Contractor shall provide methods to control surface and ground water to prevent damage to the Project and the site and to prevent damage to adjacent areas and buildings.

Provide, operate and maintain equipment of adequate capacity to control surface and ground water at all times.

PART 2 PRODUCTS

Not Used.

PART 3 EXECUTION

Not Used.

-- End of Section --

SECTION 01568

EROSION AND SEDIMENT CONTROL

PART 1 GENERAL

1.1 SUMMARY

This Section specifies equipment and materials for an erosion and sediment control program for minimizing erosion and siltation during the construction phase of the project. The erosion and sediment control provisions detailed on the Drawings and specified herein are the minimum requirements for an erosion control program. The Contractor shall provide additional erosion and sediment control materials and methods as required to effect the erosion and siltation control principles specified herein.

1.2 RELATED WORK

Examine Contract Documents for requirements that affect work of this Section. Other Specification Sections that directly relate to work of this Section include, but are not limited to:

Section 02220, DEMOLITION.
Section 02221, EXCAVATION, FILLING AND BACKFILLING FOR BUILDINGS.
Section 02222, ROCK EXCAVATION.
Section 02230, CLEARING AND GRUBBING.
Section 02316, EXCAVATION,TRENCHING, AND BACKFILLING FOR UTILITIES SYSTEMS.
Section 02531, SANITARY SEWERS.

1.3 REFERENVCES

The publications listed below form a part of this Specification to the extent referenced. The publications are referred to in the text by basic designation only

New York State Department of Transportation (NYSDOT)

NYSDOT	Standard Specifications Construction and Materials January 2, 1995

1.4 SUBMITTALS

Government approval is required for submittals with a "GA" designation; submittals having an "FIO" designation are for information only. Unless otherwise indicated below, primary reviewer for these submittals will be the Contracting Officer. The following shall be submitted in accordance with Section 01330 SUBMITTAL PROCEDURES:

SD-01 Data

List of Proposed Materials; FIO.

Submit list of proposed erosion and sediment control materials, including manufacturer's product data.

SD-04 Drawings

Proposed Methods; GA. The primary reviewer for this submittal shall be the Civil Engineering Consultant.

Submit shop drawings including 1 in. = 40 ft. scale plane indicating location of erosion control devices and siltation basins.

SD-07 Schedules

Erosion Control Program; GA

Submit schedule of erosion control activities showing specific dates when different parts of the erosion control work will be implemented.

SD-14 Samples

Filter Fabric; GA

Submit minimum 12 in. x 12 in. square samples of erosion control fabric.

1.5 EROSION CONTROL PRICIPLES

1.5.1 Erosion Control Principles

The following erosion control principles shall apply to the land grading and construction phases:

1. Stripping of vegetation, grading, or other soil disturbance shall be done in a manner which will minimize soil erosion.

2. Whenever feasible, natural vegetation shall be retained and protected.

3. Extent of area which is exposed and free of vegetation and duration of its exposure shall be kept within practical limits.

4. Temporary seeding, mulching, or other suitable stabilization measures shall be used to protect exposed critical areas during prolonged construction or other land disturbance. Prolonged exposure of unstabilized soil shall not exceed 60 days.

5. Drainage provisions shall accommodate increased runoff resulting from modifications of soil and surface conditions during and after development or disturbance. Such provisions shall be in addition to existing requirements.

6. Sediment shall be retained on-site.

7. Erosion control devices shall be installed as early as possible in the construction sequence prior to start of clearing and grubbing operations and excavation work.

1.5.2 Erosion Protection

Cut and fill slopes and stockpiled materials shall be protected to prevent erosion. Slopes shall be protected with permanent erosion protection when erosion exposure period is expected to be greater than or equal to two months, and temporary erosion protection when erosion exposure period is expected to be less than two months.

1. Permanent erosion protection shall be accomplished by seeding with grass and covering with an erosion protection material, as appropriate for prevailing conditions.

2. Temporary erosion protection shall be accomplished by covering an erosion protection materials, as appropriate for prevailing conditions.

3. Except where specified slope is indicated on Drawings, fill slopes shall be limited to a grade of 2:1 (horizontal: vertical) cut slopes shall be limited to a grade of 2:1.

PART 2 PRODUCTS

2.1 SILT FENCE

Silt fence shall be Oak wood stakes covered with filter fabric. Fence shall be 3 ft. high minimum, and shall have 2 in. by 2 in. wide stakes.

1. Filter fabric shall be Trevira Spunbound Fabric Type 1120, manufactured by Hoechst Fibers Industries; Supac N 5NP (UV) as manufactured by Phillips Fibers Corporation; equal as manufactured by Mirafi; or approved equal.

2. Silt fence shall be attached to and supported by wood posts, driven a minimum of 3 ft. into the ground. Posts shall be spaced 10 ft. o.c. maximum.

3. Fencing other than that specified above shall be subject to review and acceptance by the Contracting Officer.

2.2 HAY BALES

Hay bales for construction of erosion control devices shall be new, firm, wire or nylon-bound livestock feed-grade. Hay bales shall be staked into ground.

2.3 JUTE MESH

Jute mesh shall be of a uniform open plain weave of undyed and unbleached single jute yarn averaging 130 lb. per spindle of 14,400 yards. The yarn shall be a loosely twisted construction having an average twist of not less

than 1.6 turns per inch and shall not vary in thickness by more than one-half its normal diameter. Jute mesh shall be furnished in friary rolls approximately 225 feet long and approximately 48 in. wide.

Jute mesh shall be woven as follows:

1. Approximately 60 warp ends per yard of width.

2. Approximately 40 weft ends per linear yard.

3. Weight of jute mesh shall average 0.009 lbs per sq. yd.

2.4 TEMPORARY SEED COVER

Seed mixture for temporary cover by hydroseeding or by broadcasting by mechanical spreader application shall conform to the following:

By Hydroseeding

Quantity per 100 sq. ft	Material
27-1/2 lb.	Wood Fiber Mulch
4 lb.	Seed
1/2 lb.	Annual Ryegrass
22 lb.	10-6-4 Fertilizer
69 gal.	Water

By Mechanical Spreader

NYSDOT Section 610, at 50 lb. per acre.

2.4.1 Hydroseeding Equipment

Hydroseeding equipment may be either portable or truck mounted, with dual agitation, a minimum working volume of 1000 gallons and a minimum spray range of 80 ft.

1. Hydroseeding equipment must be capable of uniformly applying the slurry mix including wood fiber mulch if required, at the specified rate, and at the required locations.

2. Hydromulching equipment, either trailer or truck mounted, must be capable of uniformly applying straw or hay mulch at a minimum mulching rate of 8 tons per hour, at a distance of not less than 80 ft.

2.5 FILTER BASKETS

Filter Baskets shall be installed at all catch basins in conjunction with Hay Bale Catch Basin Filters. Filter baskets shall include a nonwoven geotextile filter fabric material with a minimum Grab Strength of 45 lb., Mullen Burst Strength of 60 psi minimum, a minimum permeability of 120 gpm/ sq. ft., and an opening no greater than No. 100 U.S. Standard Sieve."

PART 3 EXECUTION

3.1 SILT FENCE INSTALLATION

Silt fence shall be constructed and installed as indicated on the Drawings, prior to start of clearing and grubbing operations. Silt fence locations shall include but not be limited to the limit of work as defined by the Drawings and as directed by the Contracting Officer.

1. Silt fence shall be installed around all stockpiled soils and embedded a minimum of 6 in. below ground surface.

3.2 HAY BALE DIKE INSTALLATION

Bales shall be placed in a row with ends tightly abutting the adjacent bales. Each bale shall be embedded in the soil a minimum of 4 in. Bales shall be securely anchored in place by stakes or re-bars driven through the bales and embedded in the soil a minimum of 15 in. The first stake in each bale shall be angled toward the previously laid bale to force the bales together.

3.3 HAY BALE CHECK DAM INSTALLATION

Check dams shall be constructed and installed as indicated on the Drawings.

3.4 HAY BALE CATCH BASIN/INLET FILTER BASKET

Haybale catch basin protection and inlet filter baskets shall be placed at all inlets to drainage structures as structures are installed. Protection work shall be constructed before runoff is allowed to enter the drainage system. Construction and location of catch basin protection devices shall be as indicated on the Drawings.

3.5 JUTE MESH INSTALLATION

Jute mesh shall be placed without stretching on the freshly prepared surface so that it lays loosely on the soil and in contact with the soil at all points and then rolled or tamped firmly into the soil surface.

1. The upper end of each roll of jute mesh shall be turned down and buried to a depth of 6 in. with the soil firmly tamped against it.

2. Where two or more widths are placed side by side, edges shall overlap by not less than 6 in., and shall be stapled or pegged along overlap at 3 ft. intervals. The ends of rolls shall be placed with the upgrade section on top, and shall be stapled or pegged along overlap at 1 ft. intervals.

3. Where required to maintain jute mesh in place, each square yard of mesh shall be anchored with a minimum of two staples or pegs driven a minimum of 6 in. into the soil.

3.6 HYDROSEEDING INSTALLATION

Seed for temporary cover shall be spread by the hydroseeding method, utilizing power equipment commonly used for that purpose. Seed, fertilizer, mulch and water shall be mixed and applied to achieve application quantities specified. Material shall be applied in 2 equal applications, with the equipment during the second pass moving perpendicular to direction employed during the first pass. Hydroseeding shall not be done when it is raining or snowing, or when wind velocity exceeds 5 mph.

1. If the results of hydroseeding application are unsatisfactory, the mixture and/or application rate and methods shall be modified to achieve the required results.

2. After the grass has appeared, all areas and parts of areas which fail to show a uniform stand of grass, for any reason whatsoever, shall be reseeded and such areas and parts of areas seeded repeatedly until all areas are covered with a satisfactory growth of grass.

3.6.1 BROADCASTING SEED BY MECHANICAL SPREADER

Seed shall be broadcast by means of an approved mechanical spreader, to give a uniform application rate of 50 lb. per acre.

3.7 INLET FILTER BASKET INSTALLATION

Baskets shall be installed at all catch basins in connection with Hay Bale Catch Basin Filters. Filter baskets shall be installed in accordance with manufacturer's recommendations Maintain filter baskets as required and as follows. Baskets shall be inspected within 24 hours after each rainfall or daily during extended periods of precipitation. Repairs shall be made immediately, as necessary, to prevent particles from reaching the drainage system. Sediment deposits shall be removed after each storm event, or more often if the fabric becomes clogged. Clean clogged fabric and repair or replace damaged filter fabric.

3.8 MAINTENANCE AND REMOVAL OF EROSION CONTROL DEVICES

Wetland areas, water courses, and drainage swales adjacent to construction activities shall be monitored twice each month and immediately after 1/2 in. or greater rain storm (as measured by local weather service) for evidence of silt intrusion and other adverse environmental impacts/ which shall be corrected immediately upon discovery.

Culverts and drainage ditches shall be kept clean and clear of obstructions during construction period.

3.8.1 Erosion Control Devices

Sediment behind the erosion control device shall be checked twice each month and after each 1/2 in. or greater rain storm event. Silt shall be removed if greater than 3 in. deep.

1. Condition of erosion control device shall be checked twice each month and after each rain storm event, or more frequently as

required. Damaged and/or deteriorated items shall be replaced. Erosion control devices shall be maintained in place and in effective condition.

2. Hay bales shall be inspected frequently and maintained or replaced as required to maintain both their effectiveness and essentially their original condition. Underside of bales shall kept in close contact with the earth below at all times, as required to prevent water from washing beneath bales.

3. Sediment deposits shall be disposed of off-site, in accordance with regulations and the Environmental Plan.

3.8.2 Removal of Erosion Control Devices

Erosion control devices shall be maintained until all disturbed earth has been paved or vegetated, at which time they shall be removed. After removal, areas disturbed by these devices shall be regraded and seeded.

1. Erosion protection material shall be kept securely anchored until acceptance of completed slope or entire Project, whichever is later. Silt fence and hay bales shall be maintained in proper working condition and shall be removed at the completion of the Contract.

-- End of Section --r

SECTION 01810

COMMISSIONING OF SYSTEMS

PART 1 GENERAL

1.1 PURPOSE

The purpose of this specifications section is to commission the ARVIN CPDC Facility together with its systems.

The procedures described in this section will serve to demonstrate that the systems function as individual systems and that the interconnection's and interrelationships of the systems support the intended function of the facility.

The procedures of this section supplement and do not replace any testing required by any other section. They afford the Contractor and the Government an opportunity to prove and document that the Work was performed in accordance with the Contract, and to correct any deficiencies.

1.2 SCOPE

The Work of the following specifications sections shall be commissioned:

08330 OVERHEAD ROLLING DOORS
08331 METAL ROLLING COUNTER DOORS
08353 OPERABLE PARTITIONS
08700 BUILDERS HARDWARE
11211 PUMPS; WATER, CENTRIFUGAL AND FUEL OIL TRANSFER
11310 PUMPS; SEWAGE AND SLUDGE
11482 SCOREBOARDS AND TIMING SYSTEMS
13100 LIGHTNING PROTECTION SYSTEM
13153 SWIMMING POOL PLUMBING, MECHANICAL AND CHEMICAL EQUIPMENT
13154 SWIMMING POOL EQUIPMENT
13158 HYDROTHERAPY POOLS
13851 FIRE DETECTION AND ALARM SYSTEM, ADDRESSABLE
13930 COMBINATION STANDPIPE/SPRINKLER SYSTEM
14210 ELEVATORS, ELECTRIC
15400 PLUMBING, GENERAL PURPOSE
15556 FORCED HOT WATER HEATING SYSTEMS USING WATER AND STEAM HEAT EXCHANGERS, GLYCOL HEAT RECOVERY SYSTEM AND WORK ASSOCIATED WITH DIESEL GENERATOR INSTALLATION
15562 HEATING AND UTILITY SYSTEMS, CENTRAL STEAM
15650 CENTRAL REFRIGERATED AIR-CONDITIONING SYSTEM
15895 AIR SUPPLY, DISTRIBUTION, VENTILATION, AND EXHAUST SYSTEM
15951 DIRECT DIGITAL CONTROL FOR HVAC
16263 DIESEL-GENERATOR SET STATIONARY 100-2500 KW, WITH AUXILIARIES

16265 UNINTERRUPTIBLE POWER SUPPLY (UPS) SYSTEM ABOVE 15 KVA CAPACITY
16410 AUTOMATIC TRANSFER SWITCHES
16415 ELECTRICAL WORK, INTERIOR
16710 PREMISES DISTRIBUTION SYSTEM
16800 CENTRAL PAGING SYSTEM, SOUND SYSTEMS AND AUDIO-VISUAL SYSTEMS

PART 2 PRODUCTS (Not Applicable)

PART 3 EXECUTION (Not Applicable)

-- End of Section --

SECTION 02070

REMOVAL AND DISPOSAL OF POLYCHLORINATED BIPHENYL (PCB) CONTAINING LIGHT BALLASTS AND MERCURY CONTAINING LIGHT BULB MATERIALS

PART 1 GENERAL

1.1 REFERENCES

The publications listed below form a part of this specification to the extent referenced. The publications are referred to in the text by basic designation only.

CODE OF FEDERAL REGULATIONS (CFR)

29 CFR 1910	Occupational Safety and Health Standards
29 CFR 1926	Safety and Health Regulations for Construction
40 CFR 260	Resource Conservation & Recovery Act (RCRA)
40 CFR 261	Solid and Hazardous Waste Recycling
40 CFR 262	Standards Applicable to Generators of Hazardous Waste
40 CFR 263	Standards Applicable to Transporters of Hazardous Waste
40 CFR 264	Standards for Owners and Operators of Hazardous Waste Treatment, Storage, and Disposal Facilities
40 CFR 265	Interim Status Standards for Owners and Operators of Hazardous Waste Treatment, Storage, and Disposal Facilities
40 CFR 268	Land Disposal Restrictions
49 CFR 173	Shippers-General Requirements for Shipments and Packagings

ENGINEERING MANUALS (EM)

EM 385-1-1	(1996) U.S. Army Corps of Engineers Safety and Health Requirements Manua

1.2 SUBMITTALS

Government approval is required for submittals with a "GA" designation; submittals having an "FIO" designation are for information only. Unless otherwise indicated below, primary reviewer for these submittals will be the Hazardous Materials Consultant. The following shall be submitted in accordance with Section 01330 SUBMITTAL PROCEDURES:

SD-01 Data

Equipment Lists; GA.

Submit a list of equipment items to be used in the work, including manufacturer, model number, capacity, performance characteristics, quantities, and other pertinent information.

SD-08 Statements

Accident Prevention Plan (APP); GA.

Submit an Appendix to the APP required under Section 01420 relating to issues discussed in the Section.

Activity Hazard Analysis (AHA); GA.

Submit an Appendix to the AHA required under Section 01420 relating to issues discussed in the Section.

PCB-Containing Ballasts & Mercury-Containing Light Units Inventory; GA.

Submit and inventory of PCB-containing ballasts and mercury-containing light units. Costs of sampling and analysis to verify or add to the Contractor's PCB & Hg Inventory shall be borne by the Contractor.

PCB Ballast and Mercury Light Bulb Management Plan; GA.

The Contractor shall review the specified work tasks and removal, collection, recycling, and incineration methods and shall prepare a detailed PCB Ballast and Mercury Light Bulb Management Plan that identifies the work procedures and safety measures to be used in PCB Ballast and Mercury Light Bulb removal. The plan shall address the various sources of PCB ballasts and Mercury (Hg) lights, and the methods to be undertaken to remove these hazards to include the following key elements:

a. Removal methods for each PCB-containing ballast component.

b. Removal methods for each Hg-light containing component.

c. Training requirements as required by Federal, New York State, and local regulations.

d. Unique problems associated with the PCB or Hg removal project.

e. Sequencing of PCB ballast and Hg lighting related work.

f. Engineering controls.

g. Work Practice controls.

h. Hygiene facilities and practice.

Emergency Contingency Plan; GA

An emergency contingency plan shall be prepared in accordance with 40 CFR 261. Procedure must address the following PCB ballast and Mercury (Hg) light bulb removal hazards as appropriate to the project:

a. Spilling of PCB-containing ballasts or breakage of Hg-containing light bulb containers. Phone numbers for project manager, local fire, police and medical personnel.

Hazardous Waste Management Plan; GA.

A Hazardous Waste Management Plan shall be prepared that complies with applicable requirements of Federal, New York State, and local hazardous waste regulations and addresses as required within Section 02120.

The Hazardous Waste Management Plan shall include procedures for notifying with the Solid Waste Management Branch before accumulating hazardous waste and coordinating transportation of hazardous waste with the Solid Waste Management Branch

Waste Handling and Site Storage Plan; GA.

A Handling and Site Storage Plan shall be prepared that addresses the handling and storage of PCB ballast and Hg light components in accordance with the requirement of 40 CFR 262 and 40 CFR 265. The Contractor shall confirm that an EPA identification number has been obtained so that proper manifesting of the waste will be addressed, and that site storage limitations, including the time of storage, container requirements, contingency plan, and personnel training have been complied with.

Waste Collection and Disposal Plan; GA.

A Waste Disposal Plan shall be prepared that will include but not be limited to the following:

a. The name and address of the fluorescent lamp recycler or dismantler that will accept fluorescent lamps intact.

b. Name and address of the RCRA TSD facility that will accept broken fluorescent lamps and hazardous waste.

c. Name and address of the recycling facility that will accept broken fluorescent lamps.

d. Copies of all authorization letters, licenses, or permits to operate for the facilities, to confirm that they are permitted to accept the fluorescent lamps

e. Name and address of hazardous waste transporter that will transport fluorescent lamps & ballasts to RCRA TSD facility including EPA identification number and proof of permit, license, or authorization to transport hazardous waste in all affected states.

f. A written confirmation that the debris will be treated and disposed of in accordance with the requirements of 40 CFR 260, 40 CFR 261, 40 CFR 262, 40 CFR 264 and 40 CFR 268.

g. A written confirmation that transportation of the debris will be in accordance with 40 CFR 263.

The Contracting Officer may require that the Contractor modify the plan in order to provide adequate safety, proper scheduling and adequate supervision.

Work shall not commence until the Government has accepted all submittals.

1.3 QUALITY ASSURANCE

1.3.1 Qualifications

Contractor: Certification that the Contractor, or designated sub-contractor performing work under this Section, has prior experience on PCB-containing ballasts and Hg-containing light bulb removal and recycling or incineration projects similar in nature and extent to ensure the capability to perform the abatement in a satisfactory manner.

a. The Contractor or designated sub-contractor as a major part of its business has been engaged in Polychlorinated Biphenyls (PCBs) related activities, including the removal, spill clean-up, transportation, service, and storage of high and low concentrations of PCB solids for a period of not less than two years.

b. The Contractor or designated sub-contractor has all required State and Federal licenses to perform the type of Work described in paragraph 1.4.

c. The Contractor's or designated sub-contractor's personnel shall be fully qualified personnel who have at a minimum, completed a formal training program in the handling, processing, and safety precautions associated with PCB fluids, and shall also be in full compliance with Health and Safety requirements as stated in EM 385-1-1.

d. The Contractor or designated sub-contractor shall submit a reference list of customers Contractor has successfully contracted with for the removal and disposal of PCB-containing electrical equipment of equivalent nature and magnitude. The customer's name address, telephone number and primary contact within the company shall be provided.

e. The destruction facility proposed by the Contractor must have a full commercial operating permit from the United States Environmental Protection Agency (EPA). A copy of the permit shall be submitted to the Contracting Officer for review and acceptance.

f. Industrial Hygienist: Certification that the Industrial Hygienist meets the Office of Personnel Management Standard for the Industrial Hygiene Series GS-690, and has a minimum of two years experience in PCB and/or Hg removal .

1.4 DESCRIPTION OF WORK

1.4.1 General Provisions

This section specifies requirements for removing, handling, and containing in drums, PCB and Mercury containing materials including but not limited to; light fixture ballasts, and HID/fluorescent lamps located within the Arvin facility.

a. The Work of this Section includes obtaining all permits and manifests and notification procedures as required by all local, New York State, and Federal authorities having jurisdiction over this Work.

b. The Contracting Officer will be designated as the generator and will sign all manifests

c. The Contractor shall be responsible to identify, remove and properly dispose of all PCB-containing light ballasts and Mercury-containing light bulbs from the site covered under this Contract, whether listed above or not at the Base Bid and Unit Price bid for work covered under this Section.

d. The Contractor shall secure all permits required under applicable Federal State and local codes and regulations governing the Work described in this Section.

1.4.2 EXISTING CONDITIONS

The project consists of selective demolition and removal of portions of the Arvin Cadet Physical Development Center (Arvin CPDC), sitework, utilities, abatement of asbestos containing materials, selective abatement of lead based and lead containing paints to permit demolition, removal of PCB containing ballasts, and removal of mercury containing lamps. Demolition and removal of the existing portions of the Arvin CPDC shall include the demolition and removal of the existing construction with Category I non-friable asbestos containing materials in place, lead containing and lead based paints in place. All building debris resulting from the demolition and removal shall be tested, transported, and disposed in accordance with the requirements of Section 02220 DEMOLITION.

1.4.3 DEFINITIONS

Fluorescent Lamp Recycler or Dismantler - a recycling facility that is

in-state dismantler that that has a valid written regulatory interpretation letter from DEC, or an in-state dismantler that is operating in compliance with a hazardous waste recycling permit, or a lawfully authorized out-of-state facility.

Hazardous Waste - a waste, or combination of wastes, which because of its quantity, combinations, or physical, chemical of infectious characteristics may cause or significantly contribute to an increase in serious irreversible, or incapacitating reversible illness or pose a substantial present or potential hazard to human health, safety or welfare or to the environment when improperly treated, stored, transported, used or disposed, or otherwise managed. Hazardous Waste is defined in Title 6 New York Code Rules and Regulations (NYCRR) Part 371.1(d).

RCRA - Resource Conservation Recovery Act

RCRA TSD Facility - This type of facility shall be approved to operate under Federal Part B Permit and shall accept RCRA characteristic hazardous waste as defined in 40 CFR Part 261

Solid Waste - useless, unwanted, or discarded solid, liquid or contained gaseous material resulting from industrial, commercial, mining, agricultural, municipal, or household activities that is abandon by being disposed of, incinerated or in stored, treated or transferred pending such disposal, incineration, or other treatment. Solid waste in this reference does not include hazardous wastes, as defined above.

TSD - treatment, storage, and disposal

"No PCBs" - No detectable levels of PCBs.

PC - any detectable level of PCBs.

1.5 MEASUREMENT AND PAYMENT

All PCB-containing light ballasts, PCB containing transformer oil and PCB Oil and Mercury (Hg) containing light bulbs shall be measured as specified within Section 01025, Measurement and Payment.

1.6 SITE VISIT

Contractor shall visit and investigate the site, review the drawings and specifications, assess the amount of PCB-containing ballasts and Hg-containing light bulbs, and become familiar with conditions which will affect the work.

1.7 LIABILITY INSURANCE FOR PCB BALLASTS AND MERCURY (HG) LIGHT BULBS

PCB-containing ballasts and Hg-containing light bulb removal liability insurance, if applicable, shall be obtained without additional expense to the Government. The Contractor shall assume full responsibility and liability for the compliance with Federal, New York State, and local regulations pertaining to training, work practices, hauling, disposal, and protection of workers, visitors to the site, and persons occupying areas

adjacent to the site.

1.8 COORDINATION WITH OTHER WORK

Removal and disposal work shall be coordinated with existing work and/or concurrent work being performed in adjacent areas. This shall include interior demolition of partitions, reinforcement of existing structural steel members, as well as demolition and dismantling of similar structural steel supports, as discussed within Section 02220.

1.9 SAFETY AND HEALTH REGULATORY REQUIREMENTS

Work shall be performed in accordance with requirements of EM 385-1-1and applicable regulations including, but not limited to 29 CFR 1910, 29 CFR 1926. Matters of interpretation of the standards shall be submitted to the appropriate agency for resolution before starting work. Where these requirements vary, the most stringent shall apply.

1.10 PRECONSTRUCTION SAFETY MEETING

The Contractor, his Competent Person, and his Industrial Hygienist (IH) shall attend a preconstruction safety meeting prior to starting any work involving PCB ballast and Hg light bulb removal. Items required to be submitted will be reviewed for completeness, and where specified, for acceptance.

1.11 HAZARDOUS WASTE APPENDIX TO THE ACCIDENT PREVENTION PLAN

1.11.1 Preparation and Implementation

The Accident Preparation Plan (APP) shall have an Appendix related to the issues discussed in this Section, and be prepared in accordance with EM 385-1-1, Table 1-1 by the Contractor's Industrial Hygienist (IH). Where a topic in table 1-1 is not applicable, the APP shall justify its omission or reduced level of detail, and establish that adequate consideration was given to the topic. The APP shall cover onsite work by the Contractor or subcontractors. The Competent Person shall be responsible for development, implementation, and quality control of the content and actions required in the APP. For each anticipated work task, the APP shall establish hazards and control measures. The APP shall be easily readable and understandable by the Contractor's work force.

1.11.2 Acceptance and Modifications

The APP Hazardous Materials Appendix shall be prepared, signed and dated by the Contractors Industrial Hygienist and submitted a minimum of thirty (30) days prior to the preconstruction safety conference. Deficiencies in the APP HAZARDOUS MATERIALS APPENDIX shall be discussed at the Preconstruction Safety Conference and the APP HAZARDOUS MATERIALS APPENDIX shall be revised to correct the deficiencies, and resubmitted for acceptance. Onsite work shall not begin until the APP HAZARDOUS MATERIALS APPENDIX has been accepted unless otherwise authorized by the Contracting Officer. One copy of the APP HAZARDOUS MATERIALS APPENDIX shall be maintained in the Contractor's jobsite file, and a second copy shall be posted where it will

be accessible to personnel on the site. As work proceeds, the APP HAZARDOUS MATERIALS APPENDIX shall be adapted to new situations and conditions. Changes to the APP HAZARDOUS MATERIALS APPENDIX shall be made with concurrence of the Industrial Hygienist and Site Superintendent, and acceptance of the Contracting Officer. Should an unforeseen hazard become evident during performance of the work, the Competent Person or Industrial Hygienist shall bring such hazard to the attention of the Superintendent and the Contracting Officer, both verbally and in writing, for resolution as soon as possible. In the interim, the Contractor shall take necessary action to re-establish and maintain safe working conditions; and to safeguard onsite personnel, visitors, the public, and the environment. Disregard for provisions of this specification, or the accepted APP HAZARDOUS MATERIALS APPENDIX shall be cause for stopping of work until the matter is rectified.

1.11.3 Activity Hazard Analyses

An Activity Hazard Analysis (AHA) shall be prepared prior to beginning each major phase of the work and submitted for review and acceptance. Format shall be in accordance with EM 385-1-1, figure 1-1. A major phase of work is defined as an operation involving hazards not experienced in previous operations, or where a new work crew is to perform. The analysis shall define the activities and the sequence in which they are to be performed, specific hazards anticipated, and control measures to be implemented to eliminate or reduce each hazard to an acceptable level. Work shall not proceed on that phase until the Activity Hazard Analysis has been accepted and a preparatory meeting has been conducted by the Contractor to discuss content of the AHA with everyone engaged in the activity, including the Government's onsite representative. The AHA shall be continuously reviewed and modified when appropriate to address changing conditions or operations. The accepted AHA shall be appended to and become part of the APP.

1.12 HAZARD COMMUNICATION PROGRAM

A Hazard Communication Program shall be implemented in accordance with 29 CFR 1926 Section .59.

1.13 SAFETY AND HEALTH OVERSIGHT

The Competent Person shall be the onsite person responsible for coordination, safety, security and execution of the work. The Competent Person shall be able to identify existing and predictable PCB ballast & Hg light bulb hazards and shall have the authority to take corrective measures to eliminate them. The Industrial Hygienist shall be responsible for collection of TCLP samples, when necessary. The Contractor's IH shall be responsible for oversight and review of TCLP sampling, testing, and analysis.

1.14 TRAINED AND COMPETENT PERSONNEL

Work shall be performed by Competent Persons, qualified in the removal, storage, hauling, recycling and disposal of contaminated PCB ballasts and Hg light bulb material, and in subsequent cleanup of the affected environment. Workers shall comply with the appropriate Federal, New York

State, and local regulations, which mandate training requirements and work practices and shall be capable of performing the work under this contract.

1.15 POSTED WARNINGS AND NOTICES

1.15.1 Regulations

Two copies of applicable Federal, New York State, and local regulations shall be maintained. One copy shall be posted at the work site and one copy shall be on file in the project office.

1.15.2 Worker Information

Right-to-know notices shall be placed in clearly visible areas of the work site in compliance with Federal, New York State, and local regulations.

1.15.3 Emergency Telephone Numbers

A list of telephone numbers shall be posted at the site. The list shall include numbers of the local hospital, emergency squad, police and fire departments, Government and Contractor representatives who can be reached 24 hours per day, and professional consultants directly involved in the project.

1.16 EQUIPMENT AND MATERIALS

Sufficient quantities of health and safety materials required by 29 CFR 1926 and other materials and equipment needed to complete the project, shall be available and kept on the site.

1.16.1 Protective Clothing

The Contractor shall furnish, at no cost to personnel, equipment/clothing for protection from PCB & Hg debris. An adequate supply of these items shall be available for workers use. Provide protective clothing to the Contracting Officer at no extra cost to the Government. Workers shall not take protective clothing and equipment off the work site at any time. Protective clothing includes:

a. Gloves: Inner gloves, appropriate for items and hazards encountered, and disposable outer work gloves shall be provided to each worker and shall be worn while the worker is in the work area. Glove material shall be appropriate for the specific chemical exposure. Gloves shall not be removed from the work area, and shall be disposed of as contaminated waste at the end of the work.

b. Hard Hats: Head protection (hard hats) shall be provided as required by OSHA and EM 385-1-1 for workers and authorized visitors. Protective plastic strap suspension hats shall be used. Hard hats shall be worn at all times that work is in progress. Hats shall remain in the work area until the project is completed. Hats shall be thoroughly cleaned, decontaminated, and bagged before being removed from the work area at the end of the project.

c. Eye Protection: Fog-proof goggles for personnel engaged in LBP abatement operations shall be worn when the use of a full face piece respirator is not required.

d. Work Clothing: Cloth work clothes shall be provided for wearing under the disposable protective coveralls and foot coverings.

1.16.2 Expendable Supplies

1.16.2.1 Containers

Impermeable 55-gallon drums shall be used to receive and retain the PCB-containing light ballasts until disposal. Containers shall be labeled in accordance with EPA, DOT and OSHA standards. Cardboard boxes, with inserts shall be used to collect and retain the Hg-containing light bulbs for future recycling. Containers shall be labeled in accordance with EPA, DOT and OSHA standards.

1.17 STORAGE OF MATERIALS

Materials shall be stored in a place and manner, which protects them from damage and contamination. During periods of cold weather, plastic materials shall be protected from the cold. No flammable or hazardous materials shall be stored inside any building. Regularly inspect materials to identify damaged or deteriorating items. Damaged or deteriorated items shall not be used and shall be removed from the site as soon as they are discovered. Stored materials shall not present a hazard or an inconvenience to workers, visitors, and/or other occupants and employees of the building.

PART 2 PRODUCTS

The selection of products used in the removal of the PCB-containing ballasts and the Hg-containing light bulbs is at the discretion of the Contractor, and subject to the review and approval of the Contracting Officer. However, the Contractor shall use state of the art equipment, tools and products to assure the work is done efficiently, safely and to avoid delays in the project.

a. Provide all drums, overpack drums, storage containers, packing material, and related products and materials required for collection, storage, and transport of hazardous materials in compliance with Department of Environmental Conservation (DEC), EPA and U.S. Department of Transportation (DOT) requirements. All drums shall meet the requirements of 49 CFR 173 DOT 49 Code of Federal Regulations {CFR) 173.

b. Provide all equipment and containers necessary to collect, sample, handle, remove, transport, recycle and dispose of all hazardous materials

c. Provide all materials, products, and equipment: necessary to bulk, shred, sort, flush, dilute, or otherwise: prepare hazardous

chemicals and materials for disposal at the approved disposal facilities.

d. Provide all materials for temporary containment area: Including berms, containment pans, "Caution Tape", impervious barriers and absorbent materials.

e. Provide all employees with : personal protective equipment, and protective clothing consistent with the level of protection for each type of Work as indicated in the approved Hazardous Materials Health and Safety Plan, found in the Hazardous Materials Appendix of the Accident Prevention Plan.

f. The Contractor shall provide portable certified scale for measurement of ballasts.

PART 3 EXECUTION

3.1 WORK PROCEDURES

3.1.1 Personnel Protection Procedures

Personnel shall wear and use protective clothing and equipment as specified. Eating, smoking, drinking, chewing tobacco and chewing gum, and applying makeup shall not be permitted in the work area. Personnel of trades not engaged in the removal and disposal of PCB ballasts and Hg lights shall not remain in the area as work takes place. Electrical service shall be disconnected prior to removal being performed.

3.1.2 Safety and Health Procedures

The Competent Person, as defined by Paragraph 1.14 of this Section, shall be present on the work site throughout the abatement project to supervise, monitor, and document the project's health and safety provisions. A daily log shall be maintained showing the areas from which PCB ballasts and Hg lights were removed.

3.1.3 Safety and Health Responsibilities

The Competent Person shall:

a. Inspect PCB ballast and Hg light bulb removal work for conformance with the accepted Management Plan.

b. Ensure work is performed in strict accordance with specifications.

c. Ensure hazardous exposure to personnel and to the environment are adequately controlled.

3.1.4 Engineering Controls

3.1.4.1 Control Barriers

The work area shall be separated from other portions of the building and

the outside with control barriers. The "Caution Tape" will be draped across all openings leading into the work area , and shall be erected according to the Contractor's PCB & Hg Management Plan. Caution tape shall be supported with duct tape or spray adhesive.

3.1.4.2 PCB & Hg Control Area Exiting Procedures

Personnel exiting a PCB & Hg control area shall perform the following procedures and shall not leave the work place wearing any clothing or equipment worn during the work day:

a. Remove protective clothing and place this clothing in an approved impermeable disposal bag.

b. Wash hands and face .

c. Change to clean clothes prior to leaving the physical boundary designated around the work site.

3.2 PCB CONTAINING BALLASTS AND MERCURY CONTAINING LIGHT BULB REMOVAL PROCEDURES

3.2.1 GENERAL

The use and disposal of ballasts containing PCBs is highly regulated and compliance to all requirements set forth by authorities having jurisdiction is an essential condition of this Contract. The Contractor shall be fully aware of all Federal, New York State, and local requirements; ensure that all required permits are obtained and in place including those required of any Sub-contractor, prepare all manifests and certifications, and deliver all copies of completed manifests and final certifications and certification of destruction to the Contracting Officer in the form of one complete trucking document.

3.2.2 REMOVAL OF BALLASTS

A. All light fixture ballasts and capacitors shall be removed using appropriate techniques and personal protection gear as detailed in the submittals.

B. Prior to removal of any ballasts, the Contractor shall uncover and inspect the label on the ballasts. All ballasts designated as 'No PCBs" shall be marked with green paint, all other ballasts and capacitors shall be assumed to contain PCBs and shall be marked with red paint. Similar color-coding shall be used for the receiving drums.

C. Removal shall be performed using approved methods and tools that will minimize damage to the fluorescent lamp or white good item and ensure a quick, neat removal with the ballast or capacitor intact and undamaged.

D. Once removed, the ballasts and capacitors shall be placed in color

coded 55-gallon drums.

E. Once filled, the 55-gallon drums shall be closed and properly labeled for transport and disposal.

3.2.3 STORAGE AND MATERLALS

A. Light fixtures, wiring, ballasts, and capacitors, Once removed, shall be stored on-site for no more than 5 working days. Drums containing PCB fluid Shall be stored onsite, for no more than 5 working Days. At the conclusion of each days work, drums containing PCB fluid and ballasts and capacitors shall be stored in a designated secure location under lock and key. Transformers shall be protected from damage and secured under lock and key until they are removed for transport and disposal.

B. Ballasts, wiring, capacitors, and transformers shall be stored and loaded from secure areas that is impervious and contained. At a minimum the are shall be lined with 6-mil high-density polyethylene (HDPE) overlaid with absorbent paper.

C. Prior to any demolition of buildings from which ballasts, wiring, capacitors and transformers were removed a final inventory shall be conducted to assure that the entire inventory/assessment survey is accounted for. Disposal of inventory items shall not be allowed until all items are accounted for.

3.2.4 FINAL CERTIFICATIONS

Upon completion of the destruction of PCB and other PCB contaminated materials, the contractor shall provide:

A. Written certification from the disposal facility that the items being disposed of were delivered to, accepted and destroyed by the disposal facility. The person authorized by the disposal facility to accept PCB items for disposal shall sign certificates.

B. Copies of all manifests including all manifests associated with any re-manifesting procedures during storage and handling.

C. Certificates of destruction of materials.

D. The documentation shall include the make, serial number and year of manufacture of the transformers, their location and description, the location of the incinerator, and the quantity of disposed PCBs. Documentation shall satisfy EPA regulation with reference to record keeping.

3.2.5 WHITE GOODS AND OTHER ITEMS

Environmentally hazardous materials and system components shall be removed from white goods items and properly recycled or disposed prior to disposal of the white good carcasses. Environmentally hazardous materials requiring removal from white good items include but are not limited to:

a. Capacitors
b. Dry-type transformers

White goods which do not contain environmentally hazardous materials and white good items from which the Contractor has removed environmentally hazardous materials prior to their removal from the building, shall be removed transported and disposed of at approved facilities.

3.2.6 HANDLING AND DISPOSAL OF FLUORESCENT/HID LAMPS

All fluorescent/HID lamps shall be handled as universal waste (40 CFR 273, 6 NYCRR374.3) and recycled to the maximum extent possible. Lamps shall be removed from fixtures intact, prior to demolition. The Contractor shall manage fluorescent/HID lamps in the following manner:

A. Do not break or crush spent lamps.

B. Store spent lamps in a secure area protected from physical damage. This storage area should be identified within an easily read sign stating "Spent Fluorescent/HID Lamp Storage Area". Label all storage and shipping containers in accordance with applicable regulations.

C. Store lamps in packaging or containers that are designated to minimize breakage during both storage and shipping.

D. Store and ship broken lamps in a sealed vapor tight container.

E. Use bill of lading that contains the following information when shipping to the recycler:

F. Name and address of generator, transporter and recycler.

G. Number of lamps shipped.

H. Date of shipment and date of receipt by recycler

I. Dated signature of recycler

3.3 CLEANUP AND DISPOSAL

3.3.1 Cleanup

3.3.1.1 Daily

Surfaces in the work area shall be maintained free of accumulations of PCB ballast & Hg light bulb debris . Dry sweeping or compressed air shall not be used for cleanup. At the end of each shift, the area shall be cleaned of visible contamination utilizing an absorbent, which is then properly disposed of. A daily visual inspection of the area shall be performed by the Contractor's IH to ensure areas remain clean of Hazardous Material contamination.

3.3.2 Certification

The Contractor's IH shall submit certification documenting daily work area inspections to the Contracting Officer the following work day. The Contractor's IH shall certify in writing that the work areas have met final clearance requirements.

3.3.3 Visual Inspection

Upon completion of all work and certification, the Contractor shall notify the Contracting Officer and request a final visual inspection. Completion criteria are based upon the final cleaning/visual inspection example format sheet located at the end of this section. If the area does not pass the visual inspection, the Contractor shall reclean the area as required by paragraph CLEANUP AND DISPOSAL, at no additional expense to the Government. The Contractor shall not be relieved of his responsibilities under this specification until the Contracting Officer has accepted the final cleaning by the Contractor.

3.3.4 Transport of Materials

A. All haulers shall be properly licensed to transport PCB materials in New York and all other states traversed in transporting the ballasts, wiring, capacitors and transformer to approved disposal sites, haulers shall be under the direct Control of the Contractor at all times. Any spills during transport shall remain the responsibility of the Contractor. Any damage or costs incurred, as a result of a spill and the required clean-up process shall be borne by the Contractor.

B. Provide drip pads or containment required for transport, and dispose of these at an EPA approved incinerator. Contractor shall submit documentation verifying removal, transportation and disposal at the approved disposal facility.

C. Transport all PCB materials under proper manifests as required.

D Vehicles used for the transportation of PCB Items shall be plainly marked as required by the DOT.

E. The Contractor shill be responsible for preparing all manifests and other required shipping documents and or acquiring the necessary signature for transport.

F. The Contractor shall weigh drums on-site using a certified portable scale.

G. All drums and equipment carcasses shall be secured to the transport vehicle to prevent movement during transport.

3.3.5 Disposal

3.3.5.1 PCB Ballast Disposal Requirements

A. All drums containing PCB ballasts, wiring, capacitors, and dry transformers shall be transported to legally permitted servicing facilities or an EPA approved disposal facility. If servicing storage facilities are utilized, the date of arrival shall be documented, as required for documentation of compliance with the EPA maximum allotted "Storage for Disposal" period of one year. Transfer of material from this Contract to an EPA approved disposal facility shall occur with 90 days or more remaining in the one year storage period. The Contractor shall be liable for all penalties associated with the tardiness in delivering PCB waste to an approved disposal facility.

B. Drums containing PCB fluids, ballasts, wiring and capacitors that are marked red and other PCB contaminated materials shall be incinerated at an EPA approved incinerator. Contractor shall submit documentation verifying removal, transportation, and disposal at the approved disposal facility.

C. Drums containing "No PCB" fluids, ballasts, wiring and capacitors that are marked green shall be disposed of at a legally permitted disposal facility. Contractor shall submit documentation verifying removal, transportation, and disposal at the approved disposal facility.

3.3.5.1.1 Toxicity Characteristic Leaching Procedure (TCLP) Results

A. The Contractor shall analyze representative light bulb material samples for TCLP - Mercury in accordance with EPA Method 1311/6010/7000 with a 2-Day turnaround time using a New York State certified laboratory.

3.4 MERCURY CONTAINING LIGHT BULBS DISPOSAL REQUIREMENTS

A. Material exceeding the TCLP regulatory level for Mercury (TCLP-Mercury concentration of all samples greater than 0.2 mg/l) shall be classified as a RCRA characteristic hazardous waste.

B. Material not exceeding the TCLP regulatory level for Mercury (TCLP-Mercury concentration of all samples less than 0.2 mg/l) shall be classified as a solid waste and may be disposed of accordingly.

3.5 Disposal Documentation

Written evidence shall be provided that the hazardous waste treatment, storage, or disposal facility is approved for PCB ballast & Hg light bulb disposal by the EPA and New York State or local regulatory agencies. One copy shall be submitted of the completed manifest; signed, and dated by the initial transporter in accordance with 40 CFR 262. Ensure that certified disposal amounts have been checked, verified and equal the total amounts discovered at the Project Site along with the review and approval to be performed by the Contracting Officer.

3.6 Title to Materials

Materials resulting from demolition work, except as specified otherwise, shall become the property of the Contractor, and shall be disposed of in accordance with Section 02220 DEMOLITION, except as specified herein.

3.7 Payment for Hazardous Waste

Payment for disposal of hazardous waste will not be made until a signed copy of the manifest from the treatment or disposal facility certifying the amount of PCB ballast & Hg light bulb materials delivered is returned and a copy is furnished to the Government.

-- End of Section --

SECTION 02080

ASBESTOS ABATEMENT

PART 1 GENERAL

1.1 REFERENCES

The publications listed below form a part of this specification to the extent referenced. The publications are referred to in the text by basic designation only.

AMERICAN NATIONAL STANDARDS INSTITUTE (ANSI)

ANSI Z9.2	(1979; R 1991) Fundamentals Governing the Design and Operation of Local Exhaust Systems
ANSI Z87.1	(1989; Errata; Z87.1a) Occupational and Educational Eye and Face Protection
ANSI Z88.2	(1992) Respiratory Protection

AMERICAN SOCIETY FOR TESTING AND MATERIALS (ASTM)

ASTM C 732	(1995) Aging Effects of Artificial Weathering on Latex Sealants
ASTM D 522	(1993a) Mandrel Bend Test of Attached Organic Coatings
ASTM D 1331	(1989; R 1995) Surface and Interfacial Tension of Solutions of Surface-Active Agents
ASTM D 2794	(1993) Resistance of Organic Coatings to the Effects of Rapid Deformation (Impact)
ASTM D 4397	(1991) Polyethylene Sheeting for Construction, Industrial, and Agricultural Applications
ASTM E 84	(1995a) Surface Burning Characteristics of Building Materials
ASTM E 96	(1995) Water Vapor Transmission of Materials

ASTM E 1368	(1990) Visual Inspection of Asbestos Abatement Projects

CODE OF FEDERAL REGULATIONS (CFR)

29 CFR 1910	Occupational Safety and Health Standards
29 CFR 1926	Safety and Health Regulations for Construction
40 CFR 61	National Emissions Standards for Hazardous Air Pollutants
40 CFR 763	Asbestos
42 CFR 84	Approval of Respiratory Protective Devices
49 CFR 107	Hazardous Materials Program Procedures
49 CFR 171	General Information, Regulations and Definitions
49 CFR 172	Hazardous Materials Table, Special Provisions, Hazardous Materials Communications, Emergency Response Information, and Training Requirements
49 CFR 173	Shippers - General Requirements for Shipments and Packagings

COMPRESSED GAS ASSOCIATION (CGA)

CGA G-7	(1990) Compressed Air for Human Respiration
CGA G-7.1	(1989) Commodity Specification for Air

ENVIRONMENTAL PROTECTION AGENCY (EPA)

EPA 340/1-90-018	(1990) Asbestos/NESHAP Regulated Asbestos Containing Materials Guidance
EPA 340/1-90-019	(1990) Asbestos/NESHAP Adequately Wet Guidance
EPA 560/5-85-024	(1985) Guidance for Controlling Asbestos-Containing Materials in Buildings

NATIONAL FIRE PROTECTION ASSOCIATION (NFPA)

NFPA 701	(1996) Methods of Fire Test for Flame-Resistant Textiles and Films

NATIONAL INSTITUTE FOR OCCUPATIONAL SAFETY AND HEALTH (NIOSH)

NIOSH Pub No. 84-100	(1984; Supple 1985, 1987, 1988 & 1990) NIOSH Manual of Analytical Methods

UNDERWRITERS LABORATORIES (UL)

UL 586	(1990; Rev Apr 1995) High-Efficiency, Particulate, Air Filter Units

UNITED STATES ARMY CORPS OF ENGINEERS (USACE)

EM 385-1-1	(1996) Safety and Health Requirements Manual

1.2 DEFINITIONS

Adequately Wet: A term defined in 40 CFR 61, Subpart M, and EPA 340/1-90-019 meaning to sufficiently mix or penetrate with liquid to prevent the release of particulate. If visible emissions are observed coming from asbestos-containing material (ACM), then that material has not been adequately wetted. However, the absence of visible emissions is not sufficient evidence of being adequately wetted.

Aggressive Method: Removal or disturbance of building material by sanding, abrading, grinding, or other method that breaks, crumbles, or disintegrates intact asbestos-containing material (ACM).

Amended Water: Water containing a wetting agent or surfactant with a surface tension of at least 29 dynes per square centimeter when tested in accordance with ASTM D 1331.

Asbestos: Asbestos includes chrysotile, amosite, crocidolite, tremolite asbestos, anthophylite asbestos, actinolite asbestos, and any of these minerals that have been chemically treated and/or altered.

Asbestos-Containing Material (ACM): Any materials containing more than one percent asbestos.

Asbestos Fiber: A particulate form of asbestos, 5 micrometers or longer, with a length-to-width ratio of at least 3 to 1.

Authorized Person: Any person authorized by the Contractor and required by work duties to be present in the regulated areas.

Building Inspector: Individual who inspects buildings for asbestos and has EPA Model Accreditation Plan (MAP) "Building Inspector" training; accreditation required by 40 CFR 763 Subpart E, Appendix C.

Class I Asbestos Work: Activities defined by OSHA involving the removal of thermal system insulation (TSI) and surfacing ACM.

Class II Asbestos Work: Activities defined by OSHA involving the removal of ACM which is not thermal system insulation or surfacing material. This

includes, but is not limited to, the removal of asbestos- containing wallboard, floor tile and sheeting, roofing and siding shingles, and construction mastic. Certain "incidental" roofing materials such as mastic, flashing and cements when they are still intact are excluded from Class II asbestos work. Removal of small amounts of these materials which would fit into a glovebag may be classified as a Class III job.

Clean room: An uncontaminated room having facilities for the storage of employees' street clothing and uncontaminated materials and equipment.

Competent Person: In addition to the definition in 29 CFR 1926 Section .32(f), a person who is capable of identifying existing asbestos hazards as defined in 29 CFR 1926 Section .1101, selecting the appropriate control strategy, has the authority to take prompt corrective measures to eliminate them and has EPA Model Accreditation Plan (MAP) "Contractor/Supervisor" training; accreditation required by 40 CFR 763 Subpart E, Appendix C.

Contractor/Supervisor: Individual who supervises asbestos abatement work and has EPA Model Accreditation Plan "Contractor/Supervisor" training; accreditation required by 40 CFR 763, Subpart E, Appendix C.
Critical Barrier: One or more layers of plastic sealed over all openings into a regulated area or any other similarly placed physical barrier sufficient to prevent airborne asbestos in a regulated area from migrating to an adjacent area.

Decontamination Area: An enclosed area adjacent and connected to the regulated area and consisting of an equipment room, shower area, and clean room, which is used for the decontamination of workers, materials, and equipment that are contaminated with asbestos.

Demolition: The wrecking or taking out of any load-supporting structural member and any related razing, removing, or stripping of asbestos products.

Disposal Bag: A 6 mil thick, leak-tight plastic bag, pre-labeled in accordance with 29 CFR 1926 Section .1101, used for transporting asbestos waste from containment to disposal site.

Disturbance: Activities that disrupt the matrix of ACM, crumble or pulverize ACM, or generate visible debris from ACM. Disturbance includes cutting away small amounts of ACM, no greater than the amount which can be contained in one standard sized glovebag or waste bag in order to access a building component. In no event shall the amount of ACM so disturbed exceed that which can be contained in one glovebag or waste disposal bag which shall not exceed 60 inches in length and width.

Equipment Room or Area: An area adjacent to the regulated area used for the decontamination of employees and their equipment.

Employee Exposure: That exposure to airborne asbestos that would occur if the employee were not using respiratory protective equipment.

Fiber: A fibrous particulate, 5 micrometers or longer, with a length to width ratio of at least 3 to 1.

Friable ACM: A term defined in 40 CFR 61 Subpart M and EPA 340/1-90-018 meaning any material which contains more than 1 percent asbestos, as determined using the method specified in 40 CFR 763Subpart F, Appendix A, Section 1, Polarized Light Microscopy (PLM), that when dry, can be crumbled, pulverized, or reduced to powder by hand pressure. If the asbestos content is less than 10 percent, as determined by a method other than point counting by PLM, the asbestos content shall be verified by point counting using PLM.

Glovebag: Not more than a 60 by 60 inch impervious plastic bag-like enclosure affixed around an asbestos-containing material, with glove-like appendages through which material and tools may be handled.

High-Efficiency Particulate Air (HEPA) Filter: A filter capable of trapping and retaining at least 99.97 percent of all mono-dispersed particles of 0.3 micrometers in diameter.

Homogeneous Area: An area of surfacing material or thermal system insulation that is uniform in color and texture.

Industrial Hygienist (IH): An Industrial Hygienist certified in the practice of industrial hygiene by the American Board of Industrial Hygiene and shall be properly trained and licensed as a New York State Project Monitor.

Intact: ACM which has not crumbled, been pulverized, or otherwise deteriorated so that the asbestos is no longer likely to be bound with its matrix. Removal of "intact" asphaltic, resinous, cementitious products does not render the ACM non-intact simply by being separated into smaller pieces.

Model Accreditation Plan (MAP): USEPA training accreditation requirements for persons who work with asbestos as specified in 40 CFR 763 Subpart E, Appendix C.

Modification: A changed or altered procedure, material or component of a control system, which replaces a procedure, material or component of a required system.

Negative Exposure Assessment: A demonstration by the Contractor to show that employee exposure during an operation is expected to be consistently below the OSHA Permissible Exposure Limits (PELs).

NESHAP: National Emission Standards for Hazardous Air Pollutants. The USEPA NESHAP regulation for asbestos is at 40 CFR 61 Subpart M.

Nonfriable ACM: A NESHAP term defined in 40 CFR 61 Subpart M and EPA 340/1-90-018 meaning any material containing more than 1 percent asbestos, as determined using the method specified in 40 CFR 763Subpart F, Appendix A, Section 1, Polarized Light Microscopy, that, when dry, cannot be crumbled, pulverized or reduced to powder by hand pressure.

Nonfriable ACM (Category I): A NESHAP term defined in 40 CFR 61Subpart M and EPA 340/1-90-018 meaning asbestos-containing packings, gaskets,

resilient floor covering, and asphalt roofing products containing more than 1 percent asbestos as determined using the method specified in 40 CFR 763 Subpart F, Appendix A, Section 1, Polarized Light Microscopy.

Nonfriable ACM (Category II): A NESHAP term defined in 40 CFR 61Subpart M and EPA 340/1-90-018 meaning any material, excluding Category I nonfriable ACM, containing more than 1 percent asbestos, as determined using the methods specified in 40 CFR 763 Subpart F, Appendix A, Section 1, Polarized Light Microscopy, that when dry, cannot be crumbled, pulverized, or reduced to powder by hand pressure.

Permissible Exposure Limits (PELs):

a. PEL-Time weighted average(TWA): Concentration of asbestos not in excess of 0.1 fibers per cubic centimeter of air (f/cc) as an eight hour time weighted average (TWA), as determined by the method prescribed in 29 CFR 1926 Section .1101, Appendix A, or the current version of NIOSH analytical method 7400.

b. PEL-Excursion Limit: An airborne concentration of asbestos not in excess of 1.0 f/cc of air as averaged over a sampling period of 30 minutes as determined by the method prescribed in 29 CFR 1926 Section .1101, Appendix A, or the current version of NIOSH analytical method 7400.

Regulated Area: An OSHA term defined in 29 CFR 1926 Section .1101 meaning an area established by the Contractor to demarcate areas where Class I, II, and III asbestos work is conducted; also any adjoining area where debris and waste from such asbestos work accumulate; and an area within which airborne concentrations of asbestos exceed, or there is a reasonable possibility they may exceed, the permissible exposure limit.

Removal: All operations where ACM is taken out or stripped from structures or substrates, and includes demolition operations.

Repair: Overhauling, rebuilding, reconstructing, or reconditioning of structures or substrates, including encapsulation or other repair of ACM attached to structures or substrates. (If the amount of asbestos so "disturbed" cannot be contained in one standard glovebag or waste bag, Class I precautions are required).

Spills/Emergency Cleanups: Cleanup of sizable amounts of asbestos waste and debris which has occurred, for example, when water damage occurs in a building, and sizable amounts of ACM are dislodged. A Competent Person evaluates the site and ACM to be handled, and based on the type, condition and extent of the dislodged material, classifies the cleanup as Class I, II, or III. Only if the material was intact and the cleanup involves mere contact of ACM, rather than disturbance, could there be a Class IV classification.

Surfacing ACM: Asbestos-containing material which contains more than 1% asbestos and is sprayed-on, troweled-on, or otherwise applied to surfaces, such as acoustical plaster on ceilings and fireproofing materials on structural members, or other materials on surfaces for acoustical,

fireproofing, or other purposes.

Thermal system insulation (TSI) ACM: ACM which contains more than 1% asbestos and is applied to pipes, fittings, boilers, breeching, tanks, ducts, or other interior structural components to prevent heat loss or gain or water condensation.

Transite: A generic name for asbestos cement wallboard and pipe.

Worker: Individual (not designated as the Competent Person or a supervisor) who performs asbestos work and has completed asbestos worker training required by 29 CFR 1926 Section .1101 to include EPA Model Accreditation Plan (MAP) "Worker" training; accreditation required by 40 CFR 763 Subpart E, Appendix C, if required by the OSHA Class of work to be performed or by the state where the work is to be performed.

1.3 DESCRIPTION OF WORK

The work covered by this section includes the removal of friable and non-friable asbestos-containing materials (ACM) which are encountered during demolition activities associated with this project, the in-place demolition of non-friable Category I tar vapor barrier and mastics, and describes procedures and equipment required to protect workers and occupants of the regulated area from contact with airborne asbestos fibers and ACM dust and debris. Activities include OSHA Class I and Class II work operations involving ACM. The work also includes containment, storage, transportation and disposal of the generated ACM wastes. More specific operational procedures shall be detailed in the required Accident Prevention Plan and its subcomponents, the Asbestos Hazard Abatement Plan and Activity Hazard Analyses required in paragraph SAFETY AND HEALTH PROGRAM AND PLANS.

The project consists of the demolition of selective portions of the existing Arvin Cadet Physical Development Center (Arvin CPDC), also known as building 727, sitework, utilities, abatement of asbestos containing materials, selective abatement of lead based and lead containing paints to permit demolition, removal of PCB containing ballasts, and removal of mercury containing lamps. Demolition and removal of the existing portions of the Arvin CPDC shall include the demolition and removal of the existing construction with non-friable asbestos containing materials in place, lead containing and lead based paints in place. All building debris resulting from the demolition and removal shall be tested, transported, and disposed of in accordance with the requirements of Section 02220 DEMOLITION.

This specification includes asbestos abatement and demolition activities which are supported by Engineer Pamphlet (EP) 1110-1-11, "Asbestos Abatement Guideline Detail Sheets". The EP provides instructions on the use of two (2) types of Detail Sheets : SET-UP DETAILS (detailing the containment and control methods to be used) and RESPONSE ACTION DETAILS (describing the abatement technique to be employed). A summary of each work task can be found in Table 1.

1.3.1 Abatement Work Tasks

The specific ACM to be abated is identified on the detailed plans and project drawings and table. A summary of work task data elements for each individual ACM abatement work task to include the appropriate RESPONSE ACTION DETAIL SHEET (item to be abated and methods to be used) and SET-UP DETAIL SHEETS (containment techniques to include safety precautions and methods) is included in Table 1, "Individual Work Task Data Elements" at the end of this section.

1.3.2 Unexpected Discovery of Asbestos

For any previously untested building components suspected to contain asbestos and located in areas impacted by the work, the Contractor shall notify the Contractor's IH and the Contracting Officer (CO) either of whom will have the option of ordering up to fifty (50) bulk samples to be obtained at the Contractor's expense and delivered to a laboratory accredited under the National Institute of Standards and Technology (NIST) "National Voluntary Laboratory Accreditation Program (NVLAP)" and analyzed by PLM at no additional cost to the Government. Bulk sample locations shall be approved by the Contracting Officer. All sampling of suspect asbestos-containing materials shall be conducted in accordance with 40 CFR 763.86. The maximum number of samples collected for each homogeneous suspect material shall not exceed the minimum requirements of 40 CFR 763.86 or as otherwise approved by the Contracting Officer. Any additional components identified as ACM that have been approved by the Contracting Officer for removal shall be removed by the Contractor and will be paid for by an equitable adjustment to the contract price under the CONTRACT CLAUSE titled "changes" and with Section 01025, Measurement and Payment. Sampling activities undertaken to determine the presence of additional ACM shall be conducted by personnel who have successfully completed the EPA Model Accreditation Plan (MAP) "Building Inspector" training course required by 40 CFR 763Subpart E, Appendix C.

1.4 MEASUREMENT AND PAYMENT

All asbestos abatement work shall be measured and payed for as specified in Section 01025, Measurement and Payment.

1.5 SUBMITTALS

Government approval is required for submittals with a "GA" designation; submittals having an "FIO" designation are for information only. Unless otherwise indicated below, primary reviewer for these submittals will be the Hazardous Materials Consultant. The following shall be submitted in accordance with Section 01330 SUBMITTAL PROCEDURES:

SD-01 Data

Materials and Equipment; GA.

Manufacturer's catalog data for all materials and equipment to be used in the work, including brand name, model, capacity, performance characteristics and any other pertinent information. Test results and certificates from the manufacturer of encapsulants substantiating compliance with performance requirements of this specification. Material

Safety Data Sheets for all chemicals to be used onsite in the same format as implemented in the Contractor's HAZARD COMMUNICATION PROGRAM. Data shall include, but shall not be limited to, the following items:

a. High Efficiency Filtered Air (HEPA) local exhaust equipment

b. Vacuum cleaning equipment

c. Pressure differential monitor for HEPA local exhaust equipment (Manometer)

d. Personal (OSHA) air monitoring equipment

e. Respirators (All types to be utilized on this job must be listed)

f. Personal protective clothing and equipment
   (1) Coveralls
   (2) Underclothing
   (3) Other work clothing
   (4) Foot coverings
   (5) Hard hats
   (6) Eye protection
   (7) Other items required and approved by Contractors Designated IH and Competent Person

g. Glovebag

h. Duct Tape

i. Disposal Containers
   (1) Disposal bags
   (2) Fiberboard drums
   (3) Paperboard boxes

j. Sheet Plastic (a minimum of 6-mil thickness)
   (1) Polyethylene Sheet - General
   (2) Polyethylene Sheet - Flame Resistant
   (3) Polyethylene Sheet - Reinforced

k. Wetting Agent
   (1) Amended Water
   (2) Removal encapsulant

l. Strippable Coating

m. Prefabricated Decontamination Unit(s)

n. Other items

o. Chemical encapsulant

p. Chemical encasement materials

q. Material Safety Data Sheets (for all chemicals proposed)

SD-04 Drawings

Site Layout; GA.

Descriptions, detail project drawings, and site layout to include worksite containment area techniques as prescribed on applicable SET-UP DETAIL SHEETS, local exhaust ventilation system locations, decontamination and load-out units, other temporary waste storage facility, access tunnels, location of temporary utilities (electrical, water, sewer) and boundaries of each regulated area.

SD-08 Statements

Accident Prevention Plan (APP); GA.

An appendix to the APP required under Section 01420 relating to the issues discussed in the Section.

Qualifications; GA.

A written report, as described in Paragraph 1.6.1, providing evidence of qualifications for personnel, facilities and equipment assigned to the work.

Training Program; FIO. This submittal will be reviewed by the Contracting Officer.

A copy of the written project site-specific training material as indicated in 29 CFR 1926 Section .1101 that will be used to train onsite employees. This training document shall be signed by the Contractor's Designated IH and Competent Person.

Medical Requirements; FIO. This submittal will be reviewed by the Contracting Officer.

Physician written result and medical examinations of all employees that may enter the work area as per OSHA 29 CFR 1926.1101 regardless of exposures.

Encapsulants; GA.

Certificates stating that encapsulants meet the applicable specified performance requirements.

Hazard Communication Program; FIO.

Submit Hazards Communications Program as specified under Article 1.14.

SD-09 Reports

Exposure Assessment and Air Monitoring; GA.

Initial exposure assessments, negative exposure assessments, personal air-monitoring results and documentation must be provided.

Local Exhaust Ventilation; FIO. This submittal will be reviewed by the Contracting Officer.

Provide a manometer with a digital readout and hard-copy printout of each of the containment's pressure differential recordings.

Licenses, Permits and Notifications; GA.

Copies of all required and applicable Federal, New York State, and local notifications and permits per Paragraph 1.15.1. Submit notification of litigation and non compliance per Paragraph 1.15.2.

SD-13 Certificates

Vacuum, Filtration and Ventilation Equipment; FIO. This submittal will be reviewed by the Contracting Officer.

Manufacturer's certifications showing compliance with ANSI Z9.2 for:

a. Vacuums.
b. Water filtration equipment.
c. Ventilation equipment.
d. Other equipment required to contain airborne asbestos fibers.

SD-18 Records

Respiratory Protection Program; GA.

Records of the respirator program, including a comprehensive Respirator Protection Program (RPP) in accordance with OSHA regulations 29CFR 1910, Section 1001, 29CFR 1926.1101, EPA Regulations 40CFR 763.120, 121, ANSI standards Z88.2-1980, the NIOSH and MSHA standards and local requirements to be overseen by the Contractors IH, and including make, model and NIOSH approval numbers of respirators to be used on this project, and other information required by Article 1.13.

Cleanup and Disposal; FIO. This submittal will be reviewed by the Contracting Officer.

Waste shipment records. Weigh bills and delivery tickets shall be furnished for information only.

1.6 QUALIFICATIONS

1.6.1 Written Qualifications and Organization Report

The Contractor shall furnish a written qualifications and organization report providing evidence of qualifications of the Contractor, Contractor's Project Supervisor, Designated Competent Person, supervisors and workers; Designated IH (person assigned to project and firm name); independent testing laboratory (including name of firm, principal and analyst(s) who will perform analyses); all subcontractors to be used including disposal transportation and disposal facility firms, subcontractor supervisors,

subcontractor workers; and any others assigned to perform asbestos abatement and support activities. The report shall include an organization chart showing the Contractor's staff organization for this project by name and title, chain of command and reporting relationship with all subcontractors. The report shall be signed by the Contractor, the Contractor's onsite project manager, Designated Competent Person, Designated IH, designated testing laboratory and the principals of all subcontractors to be used. The Contractor shall include the following statement in the report: "By signing this report I certify that the personnel I am responsible for during the course of this project fully understand the contents of 29 CFR 1926 Section .1101, 40 CFR 61Subpart M, and the federal, New York State and local requirements specified in paragraph SAFETY AND HEALTH COMPLIANCE for those asbestos abatement activities that they will be involved in."

1.6.2 Specific Requirements

The Contractor shall designate in writing, personnel meeting the following qualifications:

a. Designated Competent Person: The name, address, telephone number, and resume of the Contractor's Designated Competent Person shall be provided. Evidence that the full-time Designated Competent Person is qualified in accordance with 29 CFR 1926 Sections .32 and .1101, has EPA Model Accreditation Plan (MAP) "Contractor/Supervisor" training accreditation required by 40 CFR 763 Subpart E, Appendix C, and is experienced in the administration and supervision of asbestos abatement projects, including exposure assessment and monitoring, work practices, abatement methods, protective measures for personnel, setting up and inspecting asbestos abatement work areas, evaluating the integrity of containment barriers, placement and operation of local exhaust systems, ACM generated waste containment and disposal procedures, decontamination units installation and maintenance requirements, site safety and health requirements, notification of other employees onsite, etc. The duties of the Competent Person shall include the following: controlling entry to and exit from the regulated area; supervising any employee exposure monitoring required by 29 CFR 1926 Section .1101; ensuring that all employees working within a regulated area wear the appropriate personal protective equipment (PPE), are trained in the use of appropriate methods of exposure control, and use the hygiene facilities and decontamination procedures specified; and ensuring that engineering controls in use are in proper operating conditions and are functioning properly. This Designated Competent Person shall be responsible for compliance with applicable federal, New York State and local requirements, the Contractor's Accident Prevention Plan and Asbestos Hazard Abatement Plan. The Designated Competent Person shall provide, and the Contractor shall submit, the "Contractor/Supervisor" course completion certificate and the most recent certificate for required refresher training with the employee "Certificate of Worker Acknowledgment" required by this paragraph. The Contractor shall submit evidence that this person has a minimum of 2years of

on-the-job asbestos abatement experience relevant to OSHA competent person requirements. The Designated Competent Person shall be onsite at all times during the conduct of this project.

b. Project and Other Supervisors: The Contractor shall provide the name, address, telephone number, and resume of the Project Supervisor and other supervisors who have responsibility to implement the Accident Prevention Plan, including the Asbestos Hazard Abatement Plan and Activity Hazard Analyses, the authority to direct work performed under this contract and verify compliance and have EPA Model Accreditation Plan (MAP) "Contractor/Supervisor" training accreditation required by 40 CFR 763Subpart E, Appendix C. The Project Supervisor and other supervisors shall provide, and the Contractor shall submit, the "Contractor/Supervisor" course completion certificate and the most recent certificate for required refresher training with the employee "Certificate of Worker Acknowledgment" required by this paragraph. The Contractor shall submit evidence that the Project Supervisor has a minimum of 2years of on-the-job asbestos abatement experience relevant to project supervisor responsibilities and the other supervisors have a minimum of 1years on-the-job asbestos abatement experience commensurate with the responsibilities they will have on this project.

c. Designated Industrial Hygienist: The Contractor shall provide the name, address, telephone number, resume and other information specified below for the Industrial Hygienist (IH) selected to prepare the Contractor's Asbestos Hazard Abatement Plan, prepare and perform training, direct air monitoring and assist the Contractor's Competent Person in implementing and ensuring that safety and health requirements are complied with during the performance of all required work. The Designated IH shall be a person who is board certified in the practice of industrial hygiene as determined and documented by the American Board of Industrial Hygiene (ABIH), has EPA Model Accreditation Plan (MAP) " Project Monitor" training accreditation required by 40 CFR 763 Subpart E, Appendix C and has a minimum of 2 years of comprehensive experience in planning and overseeing asbestos abatement activities. The Designated IH shall provide, and the Contractor shall submit, the "Project Monitor" course completion certificate and the most recent certificate for required refresher training with the employee "Certificate of Worker Acknowledgment" required by this paragraph. The Designated IH shall be completely independent from the Contractor according to federal, New York State, or local regulations; that is, shall not be a Contractor's employee or be an employee or principal of a firm in a business relationship with the Contractor negating such independent status. A copy of the Designated IH's current valid ABIH certification shall be included. The Designated IH shall visit the site at least four (4) times per month for the duration of asbestos activities and be available for emergencies. In addition, the Designated IH shall prepare, and the Contractor shall submit, the name, address, telephone numbers and resumes of additional IH's and industrial hygiene technicians (IHT) who will be assisting the

Designated IH in performing onsite tasks. IHs and IHTs supporting the Designated IH shall have a minimum of 2 full years of practical onsite asbestos abatement experience. The formal reporting relationship between the Designated IH and the support IHs and IHTs, the Designated Competent Person, and the Contractor shall be indicated.

d. Asbestos Abatement Workers: Asbestos abatement workers shall meet the requirements contained in 29 CFR 1926 Section .1101, 40 CFR 61Subpart M and other applicable federal, New York State and local requirements. Worker training documentation and an Asbestos Worker's License shall be provided as required on the "Certificate of Workers Acknowledgment" in this paragraph.

e. Worker Training and Certification of Worker Acknowledgment: Training documentation shall be required for each employee who will perform OSHA Class I, Class II, Class III, or Class IV asbestos abatement operations. Such documentation shall be submitted on a Contractor generated form titled "Certificate of Workers Acknowledgment" to be completed for each employee in the same format and containing the same information as the example certificate at the end of this section. All training course completion certificates (initial and most recent update refresher) required by the information checked on the form shall be attached.

f. Physician: The Contractor shall provide the name, medical qualifications, address, telephone number and resume of the physician who will or has performed the medical examinations and evaluations of the persons who will conduct the asbestos abatement work tasks. The physician shall be currently licensed by the state where the workers will be or have been examined, have expertise in pneumoconioses and shall be responsible for the determination of medical surveillance protocols and for review of examination/test results performed in compliance with 29 CFR 1926Section .1101 and paragraph MEDICAL REQUIREMENTS. The physician shall be familiar with the site's hazards and the scope of this project.

g. First Aid and CPR Trained Persons: The names of at least two persons who are currently trained in first aid and CPR by the American Red Cross or other approved agency shall be designated and shall be onsite at all times during site operations. They shall be trained in universal precautions and the use of PPE as described in the Bloodborne Pathogens Standard of 29 CFR 1910 Section .1030 and shall be included in the Contractor's Bloodborne Pathogen Program. These persons may perform other duties but shall be immediately available to render first aid when needed. A copy of each designated person's current valid First Aid and CPR certificate shall be provided.

h. Independent Testing Laboratory: The Contractor shall provide the name, address and telephone number of the independent testing laboratory selected to perform the sample analyses and report the results. The testing laboratory shall be completely independent

from the Contractor as recognized by federal, New York State or local regulations. Written verification of the following criteria, signed by the testing laboratory principal and the Contractor, shall be submitted:

(1) Phase contrast microscopy (PCM): The laboratory is fully equipped and proficient in conducting PCM of airborne samples using the methods specified by 29 CFR 1926 Section .1101, OSHA method ID-160, the most current version of NIOSH Pub No. 84-100 Method 7400, and NIOSH Pub No. 84-100 Method 7402, transmission electron microscopy (TEM); the laboratory is currently judged proficient (classified as acceptable) in counting airborne asbestos samples by PCM by successful participation in each of the last 4 rounds in the American Industrial Hygiene Association (AIHA) Proficiency Analytical Testing (PAT) Program; the names of the selected microscopists who will analyze airborne samples by PCM with verified documentation of their proficiency to conduct PCM analyses by being judged proficient in counting samples as current participating analysts in the AIHA PAT Program, and having successfully completed the Asbestos Sampling and Analysis course (NIOSH 582 or equivalent) with a copy of course completion certificate provided; when the PCM analysis is to be conducted onsite, documentation shall be provided certifying that the onsite analyst meets the same requirements.

(2) Polarized light microscopy (PLM): The laboratory is fully equipped and proficient in conducting PLM analyses of suspect ACM bulk samples in accordance with 40 CFR 763 Subpart E, Appendix E; the laboratory is currently accredited by NIST under the NVLAP for bulk asbestos analysis and will use analysts (names shall be provided) with demonstrated proficiency to conduct PLM to include its application to the identification and quantification of asbestos content.

(3) Transmission electron microscopy (TEM): The laboratory is fully equipped and proficient in conducting TEM analysis of airborne samples using the mandatory method specified by 40 CFR 763 Subpart E, Appendix E; the laboratory is currently accredited by NIST under the NVLAP for airborne sample analysis of asbestos. The laboratory will use analysts (names shall be provided) that are currently evaluated as competent with demonstrated proficiency under the NIST NVLAP for airborne sample analysis of asbestos by TEM

(4) PCM/TEM: The laboratory is fully equipped and each analyst (name shall be provided) possesses demonstrated proficiency in conducting PCM and TEM analysis of airborne samples using NIOSH Pub No. 84-100Method 7400 PCM and NIOSH Pub No. 84-100 Method 7402 (TEM confirmation of asbestos content of PCM results) from the same filter.

i. Disposal Facility, Transporter: The Contractor shall provide written evidence that the landfill to be used is approved for asbestos disposal by the USEPA, New York State Department of

Environmental Conservation, and local regulatory agencies. Copies of signed agreements between the Contractor (including subcontractors and transporters) and the asbestos waste disposal facility to accept and dispose of all asbestos containing waste generated during the performance of this contract shall be provided. Qualifications shall be provided for each subcontractor or transporter to be used, indicating previous experience in transport and disposal of asbestos waste to include all required New York State and local waste hauler requirements for asbestos. The Contractor and transporters shall meet the DOT requirements of 49 CFR 171, 49 CFR 172, and 49 CFR 173 as well as registration requirements of 49 CFR 107 and other applicable New York State or local requirements. The disposal facility shall meet the requirements of 40 CFR 61 Sections .154 or .155 as required in 40 CFR 61 Section .150(b) and other applicable New York State or local requirements.

1.6.3 Federal, State or Local Citations on Previous Projects

The Contractor and all subcontractors shall submit a statement, signed by an officer of the company, containing a record of any citations issued by Federal, New York State or local regulatory agencies relating to asbestos activities (including projects, dates, and resolutions); a list of penalties incurred through non-compliance with asbestos project specifications including liquidated damages, overruns in scheduled time limitations and resolutions; and situations in which an asbestos-related contract has been terminated (including projects, dates, and reasons for terminations). If there are none, there will be a negative declaration signed by an officer of the company.

1.7 REGULATORY REQUIREMENTS

In addition to detailed requirements of this specification, work performed under this contract shall comply with EM 385-1-1, applicable federal, New York State, and local laws, ordinances, criteria, rules and regulations regarding handling, storing, transporting, and disposing of asbestos waste materials. This includes, but is not limited to, OSHA standards, 29 CFR 1926, especially Section .1101, 40 CFR 61 Subpart M and 40 CFR 763. Matters of interpretation of standards shall be submitted to the appropriate administrative agency for resolution before starting work. Where the requirements of this specification, applicable laws, criteria, ordinances, regulations, and referenced documents vary, the most stringent requirements shall apply. The following New York State and local laws, rules and regulations regarding demolition, removal, encapsulation, construction alteration, repair, maintenance, renovation, spill/emergency cleanup, housekeeping, handling, storing, transporting and disposing of asbestos material apply: New York State Industrial Code Rule 56 (12 NYCRR Part 56), 6 NYCRR Part 360, and 6 NYCRR Part 364.

1.8 SAFETY AND HEALTH PROGRAM AND PLANS

The Contractor's Designated IH shall develop and submit a written comprehensive site-specific Accident Prevention Plan as specified under Article 1.4 of Seaction 01420 SAFETY. The Accident Prevention Plan shall

address all requirements of EM 385-1-1, Appendix A, covering onsite work to be performed by the Contractor and all subcontractors. The Accident Prevention Plan shall incorporate an Asbestos Hazard Abatement Plan, and Activity Hazard Analyses as separate appendices into one site specific Accident Prevention Plan document. Any portions of the Contractor's overall Safety and Health Program that are referenced in the Accident Prevention Plan, e.g., respirator program, hazard communication program, confined space entry program, electrical safety hazards plan, etc., shall be included as appendices to the Accident Prevention Plan. The plan shall take into consideration all the individual asbestos abatement work tasks identified in Table 1. The plan shall be prepared, signed and sealed including certification number and dated by the Contractor's Designated IH, Competent Person, and Project Supervisor.

1.8.1 The Asbestos Hazard Abatement Plan Appendix

The Asbestos Hazard Abatement Plan appendix to the Accident Prevention Plan shall include, but not be limited to, the following:

a. The personal protective equipment to be used;

b. The location and description of regulated areas including clean and dirty areas, access tunnels, and decontamination unit (clean room, shower room, equipment room, storage areas such as load-out unit);

c. Initial exposure assessment in accordance with 29 CFR 1926Section .1101;

d. Level of supervision;

e. Method of notification of other employers at the worksite in accordance with the requirements of 29CFR 1926.1101(k)(3);

f. Abatement method to include containment and control procedures;

g. Interface of trades involved in the construction;

h. Sequencing of asbestos related work;

i. Storage and disposal procedures and plan;

j. Type of wetting agent and asbestos encapsulant to be used;

k. Location of local exhaust equipment;

l. Air monitoring methods (personal, environmental and clearance);

m. Bulk sampling and analytical methods (if required);

n. A detailed description of the method to be employed in order to control the spread of ACM wastes and airborne fiber concentrations;

o. Fire and medical emergency response procedures;

p. The security procedures to be used for all regulated areas.

1.8.2 The Activity Hazard Analyses Appendix

Activity Hazard Analyses, for each major phase of work, shall be submitted and updated during the project. The Activity Hazard Analyses format shall be in accordance with EM 385-1-1 (Figure 1-1). The analysis shall define the activities to be performed for a major phase of work, identify the sequence of work, the specific hazards anticipated, and the control measures to be implemented to eliminate or reduce each hazard to an acceptable level. Work shall not proceed on that phase until the Activity Hazard Analyses has been accepted and a preparatory meeting has been conducted by the Contractor to discuss its contents with everyone engaged in the activities, including the onsite Government representatives. The Activity Hazard Analyses shall be continuously reviewed and, when appropriate, modified to address changing site conditions or operations.

1.9 PRECONSTRUCTION CONFERENCE AND ONSITE SAFETY

The Contractor and the Contractor's Designated Competent Person, Project Supervisor, and Designated IH shall meet with the Contracting Officer prior to beginning work at a safety preconstruction conference to discuss the details of the Contractor's submitted Accident Prevention Plan to include the Asbestos Hazard Abatement Plan and Activity Hazard Analyses appendices. Deficiencies in the Accident Prevention Plan will be discussed and the Accident Prevention Plan shall be revised to correct the deficiencies and resubmitted for acceptance. Any changes required in the specification as a result of the Accident Prevention Plan shall be identified specifically in the plan to allow for free discussion and acceptance by the Contracting Officer prior to the start of work. Onsite work shall not begin until the Accident Prevention Plan has been accepted. A copy of the written Accident Prevention Plan shall be maintained onsite. Changes and modifications to the accepted Accident Prevention Plan shall be made with the knowledge and concurrence of the Designated IH, the Project Supervisor, Designated Competent Person, and the Contracting Officer. Should any unforeseen hazard become evident during the performance of the work, the Designated IH shall bring such hazard to the attention of the Project Supervisor, Designated Competent Person, and the Contracting Officer, both verbally and in writing, for resolution as soon as possible. In the interim, all necessary action shall be taken by the Contractor to restore and maintain safe working conditions in order to safeguard onsite personnel, visitors, the public, and the environment. Once accepted by the Contracting Officer, the Accident Prevention Plan, including the Asbestos Hazard Abatement Plan and Activity Hazard Analyses will be enforced as if an addition to the contract. Disregard for the provisions of this contract or the accepted Accident Prevention Plan shall be cause for stopping of work, at the discretion of the Contracting Officer, until the matter has been rectified..

1.10 SECURITY

A fenced and locked security area shall be provided for each regulated area. A log book shall be kept documenting entry into and out of the regulated area. Entry into regulated areas shall only be by personnel

authorized by the Contractor and the Contractor's IH and by personnel authorized by the Contracting Officer. Personnel authorized to enter regulated areas shall be trained, be medically evaluated, and wear the required personal protective equipment, for the specific regulated area to be entered.

1.11 MEDICAL REQUIREMENTS

Medical requirements shall conform to 29 CFR 1926 Section .1101.

1.11.1 Medical Examinations

Before being exposed to airborne asbestos fibers, workers shall be provided with a medical examination as required by 29 CFR 1926 Section .1101, pertinent New York State (12 NYCRR Part 56) and local requirements. This requirement must have been satisfied within the last 12 months. The same medical examination shall be given on an annual basis to employees engaged in an occupation involving asbestos and within 30 calendar days before or after the termination of employment in such occupation. X-ray films of asbestos workers shall be identified to the consulting radiologist and medical record jackets shall be marked with the word "asbestos."

1.11.1.1 Information Provided to the Physician

The Contractor shall provide the following information in writing to the examining physician:

a. A copy of 29 CFR 1926 Section .1101 and Appendices D, E, G, and I;

b. A description of the affected employee's duties as they relate to the employee's exposure;

c. The employee's representative exposure level or anticipated exposure level;

d. A description of any personal protective and respiratory equipment used or to be used;

e. Information from previous medical examinations of the affected employee that is not otherwise available to the examining physician.

1.11.1.2 Written Medical Opinion

For each worker, a written medical opinion prepared and signed by a licensed physician indicating the following:

a. Summary of the results of the examination.

b. The potential for an existing physiological condition that would place the employee at an increased risk of health impairment from exposure to asbestos.

c. The ability of the individual to wear personal protective

equipment, including respirators, while performing strenuous work tasks under cold and/or heat stress conditions.

d. A statement that the employee has been informed of the results of the examination, provided with a copy of the results, informed of the increased risk of lung cancer attributable to the combined effect of smoking and asbestos exposure, and informed of any medical condition that may result from asbestos exposure.

1.11.2 Medical and Exposure Records

Complete and accurate records shall be maintained of each employee's medical examinations, medical records and exposure data as required by 29 CFR 1910 Section .1910.20 and 29 CFR 1926 Section .1101 for a period of 50 years after termination of employment. Records of the required medical examinations and exposure data shall be made available, for inspection and copying, to the Assistant Secretary of Labor for Occupational Safety and Health (OSHA) or authorized representatives of the employee and an employee's physician upon request of the employee or former employee. A copy of the required medical certification for each employee shall be maintained on file at the worksite for review, as requested by the Contractor's IH or the authorized representative listed in this Paragraph.

1.12 TRAINING PROGRAM

1.12.1 General

The Contractor shall establish a training program as specified by EPA Model Accreditation Plan (MAP), training requirements at 40 CFR 763Subpart E, Appendix C, the State of New York Industrial Code Rule 56 (12 NYCRR Part 56) Section 56-2, OSHA requirements at 29 CFR 1926 Section .1101(k)(9) and this specification. Contractor employees shall complete the required training for the type of work they are to perform and such training shall be documented and provided to the Contractor's IH as specified in paragraph QUALIFICATIONS.

1.12.2 Project Specific Training

Prior to commencement of work, each worker shall be instructed by the Contractor's Designated IH and Competent Person in the following project specific training. Training shall be translated and performed in the bi-lingual language of the worker.

a. The hazards and health effects of the specific types of ACM to be abated;

b. The content and requirements of the Contractor's Accident Prevention Plan to include the Asbestos Hazard Abatement Plan and Activity Hazard Analyses and site-specific safety and health precautions;

c. Hazard Communication Program;

d. Hands-on training for each asbestos abatement technique to be

employed;

e. Heat and/or cold stress monitoring specific to this project;

f. Air monitoring program and procedures;

g. Medical surveillance to include medical and exposure record keeping procedures;

h. The association of cigarette smoke and asbestos-related disease;

i. Security procedures;

j. Specific work practice controls and engineering controls required for each Class of work in accordance with 29 CFR 1926 Section .1101.

1.13 RESPIRATORY PROTECTION PROGRAM

The Contractor's Designated IH shall establish in writing, and implement a respiratory protection program in accordance with 29 CFR 1926 Section .1101, 29 CFR 1910 Section .134, ANSI Z88.2, CGA G-7, CGA G-7.1 and DETAIL SHEET 12. The Contractor's Designated IH shall establish minimum respiratory protection requirements based on measured or anticipated levels of airborne asbestos fiber concentrations encountered during the performance of the asbestos abatement work. The Contractor's respiratory protection program shall include, but not be limited to, the following elements:

a. The company policy, used for the assignment of individual responsibility, accountability, and implementation of the respiratory protection program.

b. The standard operating procedures covering the selection and use of respirators. Respiratory selection shall be determined by the hazard to which the worker is exposed.

c. Medical evaluation of each user to verify that the worker may be assigned to an activity where respiratory protection is required.

d. Training in the proper use and limitations of respirators.

e. Respirator fit-testing, i.e., quantitative, qualitative and individual functional fit checks.

f. Regular cleaning and disinfection of respirators.

g. Routine inspection of respirators during cleaning and after each use when designated for emergency use.

h. Storage of respirators in convenient, clean, and sanitary locations.

i. Surveillance of regulated area conditions and degree of employee

exposure (e.g., through air monitoring).

j. Regular evaluation of the continued effectiveness of the respiratory protection program.

k. Recognition and procedures for the resolution of special problems as they affect respirator use (e.g., no facial hair that comes between the respirator face piece and face or interferes with valve function; prescription eye wear usage; contact lenses usage; etc.).

l. Proper training in putting on and removing respirators.

1.13.1 Respiratory Fit Testing

A qualitative or quantitative fit test conforming to 29 CFR 1926Section .1101, Appendix C shall be conducted by the Contractor's Designated IH for each Contractor worker required to wear a respirator, and for the Contracting Officer and authorized visitors who enter a regulated area where respirators are required to be worn. A respirator fit test shall be performed for each worker wearing a negative-pressure respirator prior to initially wearing a respirator on this project and every 6 months thereafter. The qualitative fit tests may be used only for testing the fit of half-mask respirators where they are permitted to be worn, or of full-facepiece air purifying respirators where they are worn at levels at which half-facepiece air purifying respirators are permitted. If physical changes develop that will affect the fit, a new fit test for the worker shall be performed. Functional fit checks shall be performed by employees each time a respirator is put on and in accordance with the manufacturer's recommendation.

1.13.2 Respirator Selection and Use Requirements

The Contractor shall provide respirators, and ensure that they are used as required by 29 CFR 1926 Section .1101 and in accordance with the manufacturer's recommendations. Respirators shall be approved by the Mine Safety and Health Administration and the National Institute for Occupational Safety and Health (MSHA/NIOSH), under the provisions of 42 CFR 84, for use in environments containing airborne asbestos fibers. Personnel who handle ACM, enter regulated areas that require the wearing of a respirator, or who are otherwise carrying out abatement activities that require the wearing of a respirator, shall be provided with approved respirators that are fully protective of the worker at the measured or anticipated airborne asbestos concentration level to be encountered. For air-purifying respirators, the particulate filter portion of the cartridges or canister approved for use in airborne asbestos environments shall be high-efficiency particulate air (HEPA). The initial respirator selection and the decisions regarding the upgrading or downgrading of respirator type shall be made by the Contractor's Designated IH based on the measured or anticipated airborne asbestos fiber concentrations to be encountered. All recommendations made by the Contractor's Designated IH to downgrade respirator type shall be submitted in writing to the Contracting Officer. The Contractor's Designated Competent Person in consultation with the Designated IH, shall have the authority to take immediate action to upgrade

or downgrade respiratory type when there is an immediate danger to the health and safety of the wearer. Respirators shall be used in the following circumstances:

a. During all Class I asbestos jobs.

b. During all Class II work where the ACM is not removed in a substantially intact state.

c. During all Class II and III asbestos jobs where the Contractor does not produce a negative exposure assessment.

d. During all Class III jobs where TSI or surfacing ACM is being disturbed.

e. During all work where employees are exposed above the PEL-TWA or PEL-Excursion Limit.

f. In emergencies

1.13.3 Class I Work

The Contractor shall provide a tight-fitting, powered air purifying respirator equipped with high efficiency filters or a full-facepiece supplied air respirator operated in the pressure demand mode, equipped with HEPA egress cartridges or an auxiliary positive pressure self-contained breathing apparatus for all employees within the regulated area where Class I work is being performed for which a negative exposure assessment has not been produced and the exposure level will not exceed 1 f/cc as an 8-hour time weighted average. A full-facepiece supplied air respirator, operated in the pressure demand mode, equipped with an auxiliary positive pressure self-contained breathing apparatus shall be provided under such conditions, if the exposure assessment indicates exposure levels above 1 f/cc as an 8-hour time weighted average.

If supplied air respirators are used, provide extra full-facepiece masks for use by the Contracting Officer's representative and other authorized visitors.

1.13.4 Class II Work

The Contractor shall provide a half-mask air purifying respirator, other than a disposable respirator, equipped with high-efficiency filters whenever the employee performs Class II asbestos jobs where the Contractor does not produce a negative exposure assessment; and Class III jobs where TSI or surfacing ACM is being disturbed.

1.13.5 Sanitation

Employees who wear respirators shall be permitted to leave work areas to wash their faces and respirator facepieces whenever necessary to prevent skin irritation associated with respirator use.

1.14 HAZARD COMMUNICATION PROGRAM

A hazard communication program shall be established and implemented in accordance with 29 CFR 1926 Section .59. Material safety data sheets (MSDSs) shall be provided for all hazardous materials brought onto the worksite. One copy shall be provided to the Contracting Officer's onsite Representative and one copy shall be included in the Contractor's Hazard Communication Program.

1.15 LICENSES, PERMITS AND NOTIFICATIONS

1.15.1 General Requirements

Necessary licenses, permits and notifications shall be obtained in conjunction with the project's asbestos abatement, transportation and disposal actions and timely notification furnished of such actions as required by federal, New York State, regional, and local authorities. The Contractor shall notify the Regional Office of the USEPA, New York States' Department of Labor, the local air pollution control district/agency, New York States' OSHA program administrator, and the Contractor's IH in writing, at least 10 business days prior to the commencement of work in accordance with 40 CFR 61Subpart M, and New York State and local requirements to include the mandatory "Notification of Demolition and Renovation Record" form and other required notification documents. Notification shall be by Certified Mail, Return Receipt Requested. The Contractor shall furnish copies of the receipts to the Contracting Officer, in writing, prior to the commencement of work. Local fire department shall be notified 3 days before fire-proofing material is removed from a building and the notice shall specify when the material contains asbestos. A copy of the rental company's written acknowledgment and agreement shall be provided as required by paragraph Rental Equipment. The Contractor shall also submit a courtesy asbestos project notification to New York State Department of Labor a minimum of 10 business days prior to beginning work. For licenses, permits and notifications that the Contractor is responsible for obtaining, the Contractor will pay any associated fees or other costs incurred.

1.15.2 Litigation and Notification

The Contractor or his Designated IH shall notify the Contracting Officer if any of the following occur:

a. The Contractor or any of the subcontractors are served with notice of violation of any law, regulation, permit or license which relates to this Contract;

b. Proceedings are commenced which could lead to revocation of related permits or licenses; permits, licenses or other Government authorizations relating to this Contract are revoked;

c. Litigation is commenced which would affect this contract;

d. The Contractor or any of the subcontractors become aware that their equipment or facilities are not in compliance or may fail to

comply in the future with applicable laws or regulations.

1.16 PERSONAL PROTECTIVE EQUIPMENT

Three complete sets of personal protective equipment shall be made available to the Contracting Officer and authorized visitors for entry to the regulated area. Contracting Officer and authorized visitors shall be provided with training equivalent to that provided to Contractor employees in the selection, fitting, and use of the required personal protective equipment and the site safety and health requirements. Contractor workers shall be provided with personal protective clothing and equipment and the Contractor shall ensure that it is worn properly. The Contractor's Designated IH and Designated Competent Person supervisor shall select and approve all the required personal protective clothing and equipment to be used.

1.16.1 Respirators

See paragraph RESPIRATORY PROTECTION PROGRAM.

1.16.2 Whole Body Protection

Personnel exposed to airborne concentrations of asbestos that exceed the PELs, or for all OSHA Classes of work for which a required negative exposure assessment is not produced, shall be provided with whole body protection and such protection shall be worn properly. The Contractor's Designated IH and Competent Person supervisor shall select and approve the whole body protection to be used. The Competent Person shall examine work suits worn by employees at least once per work shift for rips or tears that may occur during performance of work. When rips or tears are detected while an employee is working, rips and tears shall be immediately mended, or the work suit shall be immediately replaced. Disposable whole body protection shall be disposed of as asbestos contaminated waste upon exiting from the regulated area. Reusable whole body protection worn shall be either disposed of as asbestos contaminated waste upon exiting from the regulated area or be properly laundered in accordance with 29 CFR 1926Section .1101. Whole body protection used for asbestos abatement shall not be removed from the worksite by a worker to be cleaned. All recommendations made by the Contractor's Designated IH to downgrade whole body protection shall be submitted in writing to the Contracting Officer. The Contractor's Designated Competent Person in consultation with the Designated IH, shall have the authority to take immediate action to upgrade or downgrade whole body protection when there is an immediate danger to the health and safety of the wearer.

1.16.2.1 Coveralls

Disposable-breathable coveralls with a zipper front shall be provided. Sleeves shall be secured at the wrists, and foot coverings secured at the ankles. See DETAIL SHEET 13.

1.16.2.2 Underwear

Disposable underwear shall be provided. If reusable underwear are used,

they shall be disposed of as asbestos contaminated waste or laundered in accordance with 29 CFR 1926 Section .1101. Asbestos abatement workers shall not remove contaminated reusable underwear worn during abatement of ACM from the site to be laundered.

1.16.2.3 Work Clothing

An additional coverall shall be provided when the abatement and control method employed does not provide for the exit from the regulated area directly into an attached decontamination unit. Cloth work clothes shall be provided for wear under the protective coverall and foot coverings when work is being conducted in low temperature conditions. Cloth work clothes shall be either disposed of as asbestos contaminated waste or properly laundered in accordance with 29 CFR 1926 Section .1101.

1.16.2.4 Gloves

Gloves shall be provided to protect the hands. Where there is the potential for hand injuries (i.e., scrapes, punctures, cuts, etc.) a suitable glove shall be provided and used.

1.16.2.5 Foot Coverings

Cloth socks shall be provided and worn next to the skin. Footwear, as required by OSHA and EM 385-1-1, that is appropriate for safety and health hazards in the area shall be worn. Rubber boots shall be used in moist or wet areas. All reusable footwear removed from the regulated area shall be thoroughly decontaminated or disposed of as ACM waste. All disposable protective foot covering shall be disposed of as ACM waste. If rubber boots are not used, disposable foot covering shall be provided.

1.16.2.6 Head Covering

Hood type disposable head covering shall be provided. In addition, protective head gear (hard hats) shall be provided as required. Hard hats shall only be removed from the regulated area after being thoroughly decontaminated.

1.16.2.7 Protective Eye Wear

Eye protection provided shall be in accordance with ANSI Z87.1.

1.17 HYGIENE FACILITIES AND PRACTICES

The Contractor shall establish a decontamination area for the decontamination of employees, material and equipment, and others authorized to enter a regulated area. The Contractor shall ensure that employees enter and exit the regulated area through the decontamination area.

1.17.1 Shower Facilities

Shower facilities, when provided, shall comply with 29 CFR 1910 Section .141(d)(3).

1.17.2 Three-Stage Decontamination Area

A temporary negative pressure decontamination unit that is adjacent and attached in a leak-tight manner to the regulated area shall be provided as described in SET-UP DETAIL SHEET Numbers 22 and 23. Utilization of prefabricated units shall have prior approval of the Contractor's IH. The decontamination unit shall have an equipment room and a clean room separated by a shower that complies with 29 CFR 1910 Section .141. All equipment and surfaces of containers filled with ACM must be cleaned prior to removing them from the equipment room or area. Surfaces of the equipment room shall be wet wiped two times after each shift. Materials used for wet wiping shall be disposed of as asbestos contaminated waste. Two separate lockers shall be provided for each asbestos worker, one in the equipment room and one in the clean room. The Contractor shall provide a minimum 50 gal. electric water heater with minimum recovery rate of 20 gal. per hour and a temperature controller for each showerhead. The Contractor shall provide a minimum of 2 showers, or as many as are required by law. Instantaneous type in-line water heater may be incorporated at each shower head in lieu of hot water heater upon approval by the Contractor's IH. Flow and temperature controls shall be located within the shower and be adjustable by the user. The wastewater pump shall be sized for 1.25 times the showerhead flow-rate at a pressure head sufficient to satisfy the filter head loss and discharge line losses. The pump shall supply a minimum 25 gpm flow with 35 ft. of pressure head. Used shower water shall be collected and filtered to remove asbestos contamination. Filters and residue shall be disposed of as asbestos contaminated material, see DETAIL SHEETS 9 and 14. Filtered water shall be discharged to the sanitary system. Wastewater filters shall be installed in series with the first stage pore size of 20 microns and the second stage pore size of 5 microns. The floor of the decontamination unit's clean room shall be kept dry and clean at all times. Water from the shower shall not be allowed to wet the floor in the clean room. Surfaces of the clean room and shower shall be wet-wiped 2 times after each shift change with a disinfectant solution. Proper housekeeping and hygiene requirements shall be maintained. Soap and towels shall be provided for showering, washing and drying. Any cloth towels provided shall be disposed of as ACM waste or be laundered in accordance with 29 CFR 1926 Section .1101.

1.17.3 Load-Out Unit

A temporary load-out unit that is adjacent and connected to the regulated area and access tunnel shall be provided as described in DETAIL SHEET Numbers 20 and 25. Utilization of prefabricated units shall have prior approval of the Contractor's IH. The load-out unit shall be attached in a leak-tight manner to each regulated area. Surfaces of the load-out unit and access tunnel shall be adequately wet-wiped 2 times after each shift change. Materials used for wet wiping shall be disposed of as asbestos contaminated waste.

1.17.4 Single Stage Decontamination Area

A decontamination area (equipment room/area) shall be provided for Class I work involving less than 25 feet or 10 square feet of TSI or surfacing ACM, and for Class II asbestos work operations where exposures exceed the PELs

or where there is no negative exposure assessment produced before the operation. The equipment room or area shall be adjacent to the regulated area for the decontamination of employees, material, and their equipment which is contaminated with asbestos. The equipment room or area shall consist of an area covered by an impermeable drop cloth on the floor or horizontal working surface. The area must be of sufficient size to accommodate cleaning of equipment and removing personal protective equipment without spreading contamination beyond the area. Surfaces of the equipment room shall be wet wiped two times after each shift. Materials used for wet wiping shall be disposed of as asbestos contaminated waste.

1.17.5 Decontamination Area Entry Procedures

The Contractor shall ensure that employees entering the decontamination area through the clean room or clean area:

a. Remove street clothing in the clean room or clean area and deposit it in lockers.

b. Put on protective clothing and respiratory protection before leaving the clean room or clean area.

c. Pass through the equipment room to enter the regulated area.

1.17.6 Decontamination Area Exit Procedures

The Contractor shall ensure that the following procedures are followed:

a. Before leaving the regulated area, respirators shall be worn while employees remove all gross contamination and debris from their work clothing using a HEPA vacuum.

b. Employees shall remove their protective clothing in the equipment room and deposit the clothing in labeled impermeable bags or containers (see Detail Sheets 9 and 14) for disposal and/or laundering.

c. Employees shall not remove their respirators in the equipment room.

d. Employees shall shower prior to entering the clean room. If a shower has not been located between the equipment room and the clean room or the work is performed outdoors, the Contractor shall ensure that employees engaged in Class I asbestos jobs: a) Remove asbestos contamination from their work suits in the equipment room or decontamination area using a HEPA vacuum before proceeding to a shower that is not adjacent to the work area; or b) Remove their contaminated work suits in the equipment room, without cleaning worksuits, and proceed to a shower that is not adjacent to the work area.

e. After showering, employees shall enter the clean room before changing into street clothes.

1.17.7 Lunch Areas

The Contractor shall provide lunch areas in which the airborne concentrations of asbestos are below 0.01 f/cc.

1.17.8 Smoking

Smoking is discouraged but, if allowed by the Contractor, shall only be permitted in designated areas approved by the Contractor's IH. Smoking within the regulated work area is prohibited and shall result in expulsion from the work are and the entire project.

1.18 REGULATED AREAS

All Class I, and II, asbestos work shall be conducted within regulated areas. The regulated area shall be demarcated to minimize the number of persons within the area and to protect persons outside the area from exposure to airborne asbestos. Where critical barriers or negative pressure enclosures are used, they shall demarcate the regulated area. Access to regulated areas shall be limited to authorized persons. The Contractor shall control access to regulated areas, ensure that only authorized personnel enter, and verify that Contractor required medical surveillance, training and respiratory protection program requirements are met prior to allowing entrance.

1.19 WARNING SIGNS AND TAPE

Warning signs and tape printed bilingually in English and in the language of the majority of the non-English speaking crews shall be provided at the regulated boundaries and entrances to regulated areas. The Contractor shall ensure that all personnel working in areas contiguous to regulated areas comprehend the warning signs. Signs shall be so located to allow personnel to read the signs and take the necessary protective steps required before entering the area. Warning signs, as shown and described in DETAIL SHEET 11, shall be in vertical format conforming to 29 CFR 1910 and 29 CFR 1926Section .1101, minimum 20 by 14 inches and displaying the following legend in the lower panel:

DANGER
ASBESTOS
CANCER AND LUNG DISEASE HAZARD
AUTHORIZED PERSONNEL ONLY

RESPIRATORS AND PROTECTIVE CLOTHING
ARE REQUIRED IN THIS AREA

Spacing between lines shall be at least equal to the height of the upper of any two lines. Warning tape shall be provided as shown and described on DETAIL SHEET 11, appended herein. Decontamination unit signage shall be as shown and described on DETAIL SHEET 15.

1.20 WARNING LABELS

Warning labels shall be affixed to all asbestos disposal containers used to contain asbestos materials, scrap, waste debris, and other products

contaminated with asbestos. Containers with preprinted warning labels conforming to requirements are acceptable. Warning labels shall be as described in DETAIL SHEET 14, shall conform to 29 CFR 1926 Section .1101 and shall be of sufficient size to be clearly legible displaying the following legend:

DANGER
CONTAINS ASBESTOS FIBERS
AVOID CREATING DUST
CANCER AND LUNG DISEASE HAZARD

1.21 LOCAL EXHAUST VENTILATION

Local exhaust ventilation units shall be equipped with HEPA filters and shall conform to ANSI Z9.2 and 29 CFR 1926 Section .1101. Filters on local exhaust system equipment shall conform to ANSI Z9.2 and UL 586. Filter shall be UL labeled.

1.22 TOOLS

Vacuums shall be leak proof to the filter, equipped with HEPA filters, of sufficient capacity and necessary capture velocity at the nozzle or nozzle attachment to efficiently collect, transport and retain the ACM waste material. Power tools shall not be used to remove ACM unless the tool is equipped with effective, integral HEPA filtered exhaust ventilation capture and collection system or has otherwise been approved for use by the Contracting Officer and the Contractor's IH. All residual asbestos shall be removed from reusable tools prior to storage and reuse. Reusable tools shall be thoroughly decontaminated prior to being removed from regulated areas.

1.23 RENTAL EQUIPMENT

If rental equipment is to be used, written notification shall be provided to the rental agency, concerning the intended use of the equipment, the possibility of asbestos contamination of the equipment and the steps that will be taken to decontaminate such equipment. A written acceptance of the terms of the Contractor's notification shall be obtained from the rental agency.

1.24 AIR MONITORING EQUIPMENT

The Contractor's Designated IH shall select and approve air monitoring equipment to be used to collect samples. The equipment shall include, but not be limited to:

a. High-volume sampling pumps that can be calibrated and operated at a constant airflow up to 16 liters per minute when equipped with a sampling train of tubing and filter cassette.

b. Low-volume, battery powered, body-attachable, portable personal pumps that can be calibrated to a constant airflow up to approximately 3.5 liters per minute when equipped with a sampling train of tubing and filter cassette, and a self-contained

rechargeable power pack capable of sustaining the calibrated flow rate for a minimum of 10 hours. The pumps shall also be equipped with an automatic flow control unit which shall maintain a constant flow even as filter resistance increases due to accumulation of fiber and debris on the filter surface.

c. Single use standard 25 mm diameter cassette, open face, 0.8 micron pore size, mixed cellulose ester membrane filters and cassettes with 50 mm electrically conductive extension cowl, and shrink bands, to be used with low flow pumps in accordance with 29 CFR 1926 Section .1101 for personal air sampling.
d. Appropriate plastic tubing to connect the air sampling pump to the selected filter cassette.

e. A flow calibrator capable of calibration to within plus or minus 2 percent of reading over a temperature range of minus 4 to plus 140 degrees F and traceable to a NIST primary standard.

1.25 EXPENDABLE SUPPLIES

1.25.1 Disposal Containers

Leak-tight disposal containers shall be provided for ACM wastes as required by 29 CFR 1926 Section .1101 and DETAIL SHEETS 9A, 9B, 9C and 14. Leak-tight means that solids, liquids or dust cannot escape or spill out. Disposal containers shall be properly labeled as per EPA 40 CFR Part 61, Subpart M. Fiber drums shall also be used in conjunction with leak-tight disposal containers whenever an ACM of substantial weight or has sharp corners is abated and prepared for disposal.

1.25.2 Leak-tight Wrapping

Two layers of 6 mil minimum thick polyethylene sheet stock shall be used for the containment of removed asbestos-containing components or materials such as reactor vessels, large tanks, boilers, insulated pipe segments and other materials too large to be placed in disposal bags as described in DETAIL SHEET 9B. Upon placement of the ACM component or material, each layer shall be individually leak-tight sealed with duct tape.

1.25.3 Sheet Plastic

Sheet plastic shall be polyethylene of 6 mil minimum thickness, fire-retardant, and shall be provided in the largest sheet size necessary to minimize seams, as indicated on the project drawings.

1.25.4 Viewing Inspection Window

Where feasible, a minimum of 1 clear, 1/8 inch thick, acrylic sheet, 18 by 24 inches, shall be installed as a viewing inspection window at eye level on a wall in each containment enclosure. All such windows shall be sealed leak-tight with industrial grade duct tape.

1.25.5 Wetting Agents

Removal encapsulant (a penetrating encapsulant) shall be provided when conducting removal abatement activities that require a longer removal time or are subject to rapid evaporation of amended water. The removal encapsulant shall be capable of wetting the ACM and retarding fiber release during disturbance of the ACM equal to or greater than provided by amended water. Performance requirements for penetrating encapsulants are specified in paragraph ENCAPSULANTS.

1.25.6 Strippable Coating

Strippable coating in aerosol cans shall be used to adhere to surfaces and to be removed cleanly by stripping at the completion of work. This work shall only be done in well ventilated areas, and with prior consent of the Contractor's IH.

1.26 MISCELLANEOUS ITEMS

A sufficient quantity of other items shall be provided including, but not limited to, scrapers, brushes, brooms, staple guns, tarpaulins, shovels, rubber squeegees, dust pans, other tools, scaffolding, staging, enclosed chutes, wooden ladders, lumber necessary for the construction of containments, UL approved temporary electrical equipment, material and cords, ground fault circuit interrupters, water hoses of sufficient length, fire extinguishers, first aid kits, portable toilets, logbooks, log forms, markers with indelible ink, spray paint in bright color to mark areas, project boundary fencing, etc.

PART 2 PRODUCTS

2.1 ENCAPSULANTS

Encapsulants shall conform to USEPA requirements, shall contain no toxic or hazardous substances and no solvent and shall meet the following requirements:

ALL ENCAPSULANTS

Requirement	Test Standard
Flame Spread - 25, Smoke Emission - 50	ASTM E 84
Combustion Toxicity Zero Mortality Protocol	Univ. of Pittsburgh
Life Expectancy, 20 yrs Accelerated Aging Test	ASTM C 732
Permeability, Minimum 0.4 perms	ASTM E 96

Additional Requirements for Bridging Encapsulant

Requirement	Test Standard
Cohesion/Adhesion Test, 50 pounds of force/foot	ASTM E 736
Fire Resistance, Negligible affect on fire resistance rating over 3 hour test (Classified by UL for use over fibrous and cementitious sprayed fireproofing)	ASTM E 119

ALL ENCAPSULANTS

Requirement	Test Standard
Impact Resistance, Minimum 43 in-lb (Gardner Impact Test)	ASTM D 2794
Flexibility, no rupture or cracking (Mandrel Bend Test)	ASTM D 522

Additional Requirement for Penetrating Encapsulant

Requirement	Test Standard
Cohesion/Adhesion Test, 50 pounds of force/foot	ASTM E 736
Fire Resistance, Negligible affect on fire resistance rating over 3 hour test (Classified by UL for use over fibrous and cementitious sprayed fireproofing)	ASTM E 119
Impact Resistance, Minimum 43 in-lb (Gardner Impact Test)	ASTM D 2794
Flexibility, no rupture or cracking (Mandrel Bend Test)	ASTM D 522

Additional Requirement for Lockdown Encapsulant

Requirement	Test Standard
Fire Resistance, Negligible affect on fire resistance rating over 3 hour test (Tested with fireproofing over encapsulant applied directly to steel member)	ASTM E 119
Bond Strength, 100 pounds of force/foot (Tests compatibility with cementitious and fibrous fireproofing)	ASTM E 736

2.2 MISCELLANEOUS MATERIALS

2.2.1 Glovebag

Glovebags shall be provided as described in 29 CFR 1926 Section .1101 and SET-UP DETAIL SHEET 10. The glovebag assembly shall be 6 mil thick plastic, prefabricated and seamless at the bottom with preprinted OSHA warning label.

2.2.2 Duct Tape

Industrial grade duct tape of 2" or 3" widths suitable for bonding sheet plastic and disposal container shall be provided.

2.2.3 Disposal Bags

Leak-tight bags, 6 mil thick, shall be provided for placement of asbestos generated waste as described in DETAIL SHEET 9A.

2.2.4 Fiberboard Drums

Fiberboard drums shall be 1/4" thick, and be reinforced at its base. Drums shall be lined with two (2) 6-mil waste bags.

2.2.5 Cardboard Boxes

Heavy-duty corrugated cardboard boxes coated with plastic or wax to retard deterioration from moisture shall be provided as described in DETAIL SHEET 9C if required by New York State and local requirements. Boxes shall fit into selected ACM disposal bags. Filled boxes shall be sealed leak-tight with duct tape.

2.2.6 Polyethylene Sheet

2.2.6.1 General

Film shall be clear or frosted and conform to ASTM D 4397.

2.2.6.2 Flame Resistant

Where a potential for fire exists, flame-resistant sheets shall be provided. Film shall be frosted and shall conform to the requirements of NFPA 701.

2.2.6.3 Reinforced

Reinforced sheets shall be provided where high skin strength is required such as where it constitutes the only barrier between the regulated area and the outdoor environment. The sheet stock shall consist of translucent, nylon-reinforced or woven-polyethylene thread laminated between two layers of polyethylene film. Film shall meet flame resistant standards of NFPA 701.

2.2.7 Amended Water

Amended water shall meet the requirements of ASTM D 1331.

2.2.8 Mastic Removing Solvent

Mastic removing solvent shall be nonflammable and shall not contain methylene chloride, glycol ether, or halogenated hydrocarbons. Solvents used onsite shall have a flash point greater than 140 degrees F.

PART 3 EXECUTION

3.1 GENERAL

The Contractor shall use the engineering controls and work practices required in 29 CFR 1926 Section .1101(g) in all operations regardless of the levels of exposure. Personnel shall wear and utilize protective clothing and equipment as specified. Eating, smoking, drinking, chewing or applying cosmetics shall not be permitted in the regulated area. All hot work (burning, cutting, welding, etc.) shall be conducted under strictly controlled conditions in conformance with 29 CFR 1926 Section .352, Fire

Prevention. Personnel of other trades, not engaged in asbestos abatement activities, shall not be exposed at any time to airborne concentrations of asbestos unless all the administrative and personal protective provisions of the Contractor's Accident Prevention Plan are complied with. Power to the regulated area shall be locked-out and tagged in accordance with 29 CFR 1910 and temporary electrical service with ground fault circuit interrupters shall be provided as needed. Government shall not be liable for utility outages. Temporary electrical service shall be disconnected when necessary for wet removal. The Contractor shall stop abatement work in the regulated area immediately when the airborne total fiber concentration: (1) equals or exceeds 0.01 f/cc or the pre-abatement concentration, whichever is greater, outside the regulated area, or (2) equals or exceeds 1.0 f/cc inside the regulated area. The Contractor shall correct the condition to the satisfaction of the Contractor's IH, including visual inspection and air sampling. Work will resume only upon notification by the Contractor's IH. Corrective actions shall be documented.

3.2 PROTECTION OF ADJACENT WORK OR AREAS TO REMAIN

Asbestos abatement shall be performed without damage to or contamination of adjacent work or area, specifically along the Building A west wall interface. Where such work or area is damaged or contaminated, as verified by the Contractor's IH using visual inspection or sample analysis, it shall be restored to its original condition or decontaminated by the Contractor at no expense to the Government as deemed appropriate by the Contracting Officer. This includes inadvertent spill of dirt, dust or debris in which it is reasonable to conclude that asbestos may exist. When these spills occur, work shall stop in all effected areas immediately and the spill shall be cleaned. When satisfactory visual inspection and air sampling analysis results are obtained and have been evaluated by the Contractor's Designated IH and the Contracting Officer, work may proceed.

3.3 OBJECTS

3.3.1 Removal of Mobile Objects

Mobile objects, furniture, and equipment will be removed from the area of work by the Contractor before asbestos abatement work can begin. In areas where exposed friable ACM is present, carpets, draperies, and other items which may have been left behind, and are not suitable for onsite wet cleaning methods shall be disposed of as asbestos contaminated material.

3.4 BUILDING VENTILATION SYSTEM AND CRITICAL BARRIERS

Building ventilating systems supplying air into or returning air out of an regulated area shall be isolated by airtight seals to prevent the spread of contamination throughout the system. Air-tight critical barriers shall be installed on all building ventilating openings located inside the regulated area that supply or return air from the building ventilation system or serve to exhaust air from the building. The critical barriers shall consist of air-tight rigid covers for building ventilation supply and exhaust grills where the ventilation system is required to remain in service during abatement and covered over with 2 layers of polyethylene. Edges to wall, ceiling and floor surfaces shall be sealed with industrial

grade duct tape. Critical barriers shall be installed as shown on drawings and appended SET-UP DETAIL SHEETS.

3.5 PRECLEANING

All surfaces shall be cleaned by HEPA vacuum and adequately wet wiped prior to establishment of containment.

3.6 METHODS OF COMPLIANCE

3.6.1 Mandated Practices

The Contractor shall employ proper handling procedures in accordance with 29 CFR 1926 and 40 CFR 61 Subpart M, and the specification requirements herein. The specific abatement techniques and items identified shall be detailed in the Contractor's Asbestos Hazard Abatement Plan including, but not limited to, details of construction materials, equipment, and handling procedures. The Contractor shall use the following engineering controls and work practices in all operations, regardless of the levels of exposure:

a. Vacuum cleaners equipped with HEPA filters to collect debris and dust containing ACM.

b. Wet methods or wetting agents to control employee exposures during asbestos handling, mixing, removal, cutting, application, and cleanup; except where it can be demonstrated that the use of wet methods is unfeasible due to, for example, the creation of electrical hazards, equipment malfunction, and in roofing.

c. Prompt clean-up and disposal in leak-tight containers of wastes and debris contaminated with asbestos.

d. Inspection and repair of polyethylene in work and high traffic areas.

e. Cleaning of equipment and surfaces of containers filled with ACM prior to removing them from the equipment room or area.

3.6.2 Control Methods

3.6.2.1 Work Performed Within Containment

The Contractor shall use the following control methods, as demonstrated in SET-UP DETAIL SHEETS 1, 2, 3 & 4, to comply with the PELs:

a. Local exhaust ventilation equipped with HEPA filter dust collection systems(see SET-UP DETAIL SHEET 8);

b. Enclosure or isolation of processes producing asbestos dust;

c. Ventilation of the regulated area to move contaminated air away from the breathing zone of employees and toward a filtration or collection device equipped with a HEPA filter;

d. Use of other work practices and engineering controls;

e. Where the feasible engineering and work practice controls described above are not sufficient to reduce employee exposure to or below the PELs, the Contractor shall use them to reduce employee exposure to the lowest levels attainable by these controls and shall supplement them by the use of respiratory protection that complies with paragraph, RESPIRATORY PROTECTION PROGRAM.

3.6.2.2 Work Performed Outside of Containment for In-Place Demolition of Non-Friable ACM Tar Vapor Barrier, Non-Friable ACM Waterproofing Membranes and Non-Friable ACDM MAstics

a. The Buildings to be demolished are to be assumed to contain throughout non-friable ACM tar vapor barriers, non-friable ACM waterproofing membranes and non-friable ACM mastics. These materials shall be demolished in place. In-place demolition on non-friable ACNM tar vapor barriers, non-friable ACM waterproofing mambranes and non-friable ACM mastics shall be in accordance with the requirements of Section 02220, DEMOLITION.

3.6.3 Unacceptable Practices

The following work practices and engineering controls shall not be used for work related to asbestos or for work which disturbs ACM, regardless of measured levels of asbestos exposure or the results of initial exposure assessments:

a. High-speed abrasive disc saws that are not equipped with point of cut ventilator or enclosures with HEPA filtered exhaust air.

b. Compressed air used to remove asbestos, or materials containing asbestos, unless the compressed air is used in conjunction with an enclosed ventilation system designed to capture the dust cloud created by the compressed air.

c. Dry sweeping, shoveling, or other dry clean-up of dust and debris containing ACM.

d. Employee rotation as a means of reducing employee exposure to asbestos.

3.6.4 Class I Work

In addition to requirements of paragraphs Mandated Practices and Control Methods, the following engineering controls and work practices shall be used:

a. A Competent Person shall supervise the installation and operation of the control system.

b. For jobs involving the removal of more than 25 feet or 10 square feet of TSI or surfacing material, the Contractor shall place

critical barriers over all openings to the regulated area.

c. HVAC systems shall be isolated in the regulated area by sealing with a double layer of plastic or air-tight rigid covers.

d. Impermeable dropcloths (6 mil or greater thickness) shall be placed on surfaces beneath all removal activity.

e. Objects within the regulated area shall be handled as specified in paragraph OBJECTS.

f. Where a negative exposure assessment has not been provided or where exposure monitoring shows the PEL was exceeded, the regulated area shall be ventilated to move contaminated air away from the employee's breathing zone toward a HEPA unit or collection device.

3.6.5 Specific Control Methods for Class I Work

In addition to requirements of paragraph Class I Work, Class I asbestos work shall be performed using the control methods identified in the subparagraphs below.

3.6.5.1 Negative Pressure Enclosure (NPE) System

The NPE system shall be as shown in SETUP DETAIL SHEET2, 3, 4,7, & 8. The system shall provide at least 4 air changes per hour inside the containment. The local exhaust unit equipment shall be operated 24 hours per day, until the containment is removed and shall be leak-proof to the filter and equipped with HEPA filters. Air movement shall be directed away from the employees and toward a HEPA filtration device. The NPE shall be smoke tested for leaks at the beginning of each shift. Local exhaust equipment shall be sufficient to maintain a minimum pressure differential of minus 0.02 inch of water column relative to adjacent, unsealed areas. Pressure differential shall be monitored continuously, 24 hours per day, with an automatic manometric recording instrument. Pressure differential recordings shall be provided daily on the same day collected. Readings shall be reviewed by the Contractor's Designated Competent Person and IH prior to submittal. The Contractor's IH shall be notified immediately if the pressure differential falls below the prescribed minimum. In no case shall the building ventilation system be used as the local exhaust system for the regulated area. The local exhaust system shall terminate out of doors unless an alternate arrangement is allowed by the Contract Officer. All filters used shall be new at the beginning of the project and shall be periodically changed as necessary and disposed of as ACM waste.

3.6.5.2 Glovebag Systems

Glovebag systems shall be as shown in SETUP DETAIL SHEET 10. The glovebag system shall be used to remove ACM from straight runs of piping and elbows and other connections. Glovebags shall be used without modification and shall be smoke-tested for leaks and any leaks sealed prior to use. Glovebags shall be installed to completely cover the circumference of pipe or other structures where the work is to be done. Glovebags shall be used

only once and shall not be moved. They shall not be used on surfaces whose temperature exceeds 150 degrees F. Prior to disposal glovebags shall be collapsed by removing air within them using a HEPA vacuum. Before beginning the operation, loose and friable material adjacent to the glovebag operation shall be wrapped and sealed in two layers of plastic or otherwise rendered intact. At least two persons shall perform Class I glovebag removal. Asbestos regulated work areas shall be established as specified and shown on detailed drawings and plans for glovebag abatement. Designated boundary limits for the asbestos work shall be established with rope or other continuous barriers and all other requirements for asbestos control areas shall be maintained including area signage and boundary warning tape as specified in SET-UP DETAIL SHEET 11.

a. In addition to requirements for negative pressure glovebag systems above, the Contractor shall attach HEPA vacuum systems or other devices to the bag to prevent collapse during removal of ACM from straight runs of piping and elbows and other connections.

b. The negative pressure glove boxes used to remove ACM from pipe runs shall be fitted with gloved apertures and a bagging outlet and constructed with rigid sides from metal or other material which can withstand the weight of the ACM and water used during removal. A negative pressure shall be created in the system using a HEPA filtration system. The box shall be smoked tested for leaks prior to each use.

3.6.5.3 Mini-Enclosures

Mini-Containment (small walk-in enclosure)as shown in SETUP DETAIL SHEET 7 to accommodate no more than two persons, may be used if the disturbance or removal can be completely contained by the enclosure with the following specifications and work practices. The mini-enclosure shall be inspected for leaks and smoke tested before each use. Air movement shall be directed away from the employee's breathing zone within the mini-enclosure.

3.6.5.4 Wrap and Cut Operation

3.6.6 Class II Work

a. A Competent Person shall supervise the work.

b. For indoor work, critical barriers shall be placed over all openings to the regulated area.

c. Impermeable dropcloths shall be placed on surfaces beneath all removal activity.

3.6.7 Specific Control Methods for Class II Work

In addition to requirements of paragraph Class II Work, Class II work shall be performed using the following methods:

3.6.7.1 Vinyl and Asphalt Flooring Materials and Associated Mastics

When removing vinyl and asphalt flooring and associated mastic materials which contain ACM (all floor tile mastics shall be treated as ACM), the Contractor shall use the following practices as shown in RESPONSE ACTION DETAIL SHEETS 57 and 59. Resilient sheeting shall be removed by adequately wet methods. Tiles shall be removed intact (if possible); wetting is not required when tiles are heated and removed intact. Flooring or its backing shall not be sanded. Scraping of residual adhesive and/or backing shall be performed using wet methods, or shall be left in place and be demolished in-place. All non-friable ACM mastics demolished in-place shall proceed as per paragraph 3.6.2. . Mechanical chipping is prohibited unless performed in a negative pressure enclosure. Dry sweeping is prohibited. The Contractor shall use vacuums equipped with HEPA filter, disposable dust bag, and metal floor tool (no brush) to clean floors.

3.6.7.2 Roof Flashing Material and Roof Equipment Flashing Materials

When removing roof tar flashing and roof equipment flashing materials which contain ACM, the Contractor shall use the following practices as shown in RESPONSE ACTION DETAIL SHEET 74. Tar roof flashing material and roof equipment flashing materials shall be removed in an intact state. Wet methods shall be used to remove roof flashing materials and roof equipment flashing materials that are not intact, or that will be rendered not intact during removal, unless such wet methods are not feasible or will create safety hazards. When removing built-up roof flashing and roof equipment flashing materials, with asbestos-containing roofing felts and an aggregate surface, using a power roof cutter, all dust resulting from the cutting operations shall be collected by a HEPA dust collector, or shall be HEPA vacuumed by vacuuming along the cut line. Asbestos-containing tar roof flashing material and roof equipment flashing materials shall not be dropped or thrown to the ground, but shall be lowered to the ground via covered, dust-tight chute, crane, hoist or other method approved by the Contractor's IH. Any ACM that is not intact shall be lowered to the ground as soon as practicable, but in any event no later than the end of the work shift. While the material remains on the roof it shall be kept wet or placed in an impermeable waste bag or wrapped in plastic sheeting. Intact ACM shall be lowered to the ground as soon as practicable, but in any event no later than the end of the work shift. Unwrapped material shall be transferred to a closed receptacle precluding the dispersion of dust. Critical barriers shall be placed over roof level heating and ventilation air intakes, as well as all openings or penetrations located on the floor below. These shall include, but not be limited to windows, vents, louvers, and doors .

3.6.7.3 Non-Friable ACM Tar Vapor Barrier, BNon-Friable ACM Waterproofing Membrane and Non-Friable ACM Mastic Material

The Contractor shall use the work practices per Section 02220, DEMOLITION when performing Class II in-place removal of non-friable ACM tar vapor barriers, non-friable ACM waterproofing membranes and non-friable ACM mastics.

3.6.7.4 Window Sealant/Caulking Material, Window Sashes and Skylights

When removing asbestos-containing window sealant material, the Contractor

shall use the work practices as shown in SET-UP DETAIL 9A & 9B, and RESPONSE ACTION DETAIL SHEET 53(substitute window & window sealant materials for cement architectural products). All window sealant material shall be sprayed with amended water prior to removal. Poly sheeting shall be laid below the work area, and an HEPA-filtered vacuum shall be used for clean-up. Once window sealant is removed from the substrate, all associated window panes shall be wrapped in two-layers of 6-mil poly. Wrapped panels shall be immediately transported to the asbestos waste container

3.6.7.5 Fire Door Removal Method.

When removing asbestos-containing fire doors, the Contractor shall use the work practices as shown in SET-UP DETAIL 9B, and RESPONSE ACTION DETAIL SHEET 53(substitute fire doors for cement architectural products). Poly sheeting shall be laid below the work area, and an HEPA-filtered vacuum shall be used for clean-up. All fire doors shall be removed from its existing frame & supports. Once the fire door is removed from the frame, the entire door shall be wrapped in two-layers of 6-mil poly. Wrapped doors shall be immediately transported to the asbestos waste container

3.6.8 Specific Control Methods for Class III Work

Not Used

3.6.9 Specific Control Methods for Class IV Work

Not Used

3.6.10 Alternative Methods for Roofing Materials and Asphaltic Wrap

Not Used

3.6.11 Cleaning After Asbestos Removal

After completion of all asbestos removal work, surfaces from which ACM has been removed shall be wet wiped or sponged clean, or cleaned by some equivalent method to remove all visible residue. Run-off water shall be collected and filtered through a dual filtration system. A first filter shall be provided to remove fibers 20 micrometers and larger, and a final filter provided that removes all fibers 5 micrometers and larger. After the gross amounts of asbestos have been removed from every surface, all remaining visible accumulations of asbestos on floors shall be collected using plastic shovels, rubber squeegees, rubber dustpans, and HEPA vacuum cleaners as appropriate to maintain the integrity of the regulated area. When all TSI and surfacing material has been removed, workmen shall use HEPA vacuum cleaners to vacuum every surface. Workers shall also employ wet-wiping methods to clean surfaces from which TSI and surfacing materials have been abated. Particular attention shall be paid to those surfaces or locations which could harbor accumulations or residual asbestos dust.

3.6.12 Class II Asbestos Work Response Action Detail Sheets

The following Class II Asbestos Work Response Action Detail Sheet is

specified on Table 1 for each individual work task to be performed.

a. Vinyl Asbestos Tile Adhered to Concrete Floor System by Asbestos Containing Adhesive: See Sheet 57

b. Window Sealant & Contaminated Glass Panes: See Sheet 53

c. Tar Roof Flashing and Roof Equipment Flashing: See Sheet 74

d. Asbestos-contaminated Masonry Wall (Tar Vapor Barrier & Waterproofing Membrane): See Paragraph 3.6.2.2, 3.6.7.3 and Section 02220, DEMOLITION.

3.6.13 Sealing Contaminated Items Designated for Disposal

Contaminated architectural, mechanical, and electrical appurtenances such as Venetian blinds, full height partitions, carpeting, duct work, pipes and fittings, radiators, light fixtures, conduit panels, and other contaminated items designated for removal shall be coated with an asbestos lockdown encapsulant at the demolition site before being removed from the asbestos control area. These items need not to be vacuumed prior to application of the lockdown encapsulant. The asbestos lockdown encapsulant shall be tinted a contrasting color and shall be spray applied by airless method. Thoroughness of sealing operation shall be visually gauged by the extent of colored coating on exposed surfaces. All materials shall then be place within asbestos waste bags and disposed of as ACM debris.

3.7 FINAL CLEANING AND VISUAL INSPECTION

Upon completion of abatement, the regulated area shall be cleaned by collecting, packing, and storing all gross contamination; see SET-UP DETAIL SHEETS 9A, 9B, 9C, 14 and 20. A final cleaning shall be preformed using HEPA vacuum and wet cleaning of all exposed surfaces and objects in the regulated area. Upon completion of the cleaning, the Contractor shall conduct a visual pre-inspection of the cleaned area in preparation for a final inspection before final air clearance monitoring and recleaning, as necessary. Upon completion of the final cleaning, the Contractor's IH shall conduct a final visual inspection of the cleaned regulated area in accordance with ASTM E 1368 and document the results on the Final Cleaning and Visual Inspection as specified on the SET-UP DETAIL SHEET 19. If the Contractor's IH rejects the clean regulated area as not meeting final cleaning requirements, the Contractor shall reclean as necessary and have a follow-on inspection conducted with the Contractor's IH. Recleaning and follow-up reinspection shall be at the Contractor's expense.

3.8 LOCKDOWN

Prior to removal of plastic barriers and after clean-up of gross contamination and final visual inspection, a post removal (lockdown) encapsulant shall then be spray applied to ceiling, walls, floors, and other surfaces in the regulated area.

3.9 EXPOSURE ASSESSMENT AND AIR MONITORING

3.9.1 General Requirements

Exposure assessment, air monitoring and analysis of airborne concentration of asbestos fibers shall be performed in accordance with 29 CFR 1926Section .1101, the Contractor's air monitoring plan, and as specified. Personal exposure air monitoring (collected at the breathing zone) that is representative of the exposure of each employee who is assigned to work within a regulated area shall be performed by the Contractor's Designated IH. Breathing zone samples shall be taken for at least 25 percent of the workers in each shift, or a minimum of two, whichever is greater. Air monitoring results at the 95 percent confidence level shall be calculated as shown in Table 2 at the end of this section. The Contractor shall provide an onsite independent testing laboratory with qualified analysts and appropriate equipment to conduct sample analyses of air samples using the methods prescribed in 29 CFR 1926 Section .1101 to include NIOSH Pub No. 84-100 Method 7400. Preabatement and abatement environmental air monitoring shall be performed by the Contractor's Designated IH. Final clearance environmental air monitoring, shall be performed by the Contractor's Designated IH. Environmental and final clearance air monitoring shall be performed using NIOSH Pub No. 84-100 Method 7400 (PCM) with optional confirmation of results by NIOSH Pub No. 84-100 Method 7402 (TEM). For environmental and final clearance, air monitoring shall be conducted at a sufficient velocity and duration to establish the limit of detection of the method used at 0.005 f/cc. Confirmation of asbestos fiber concentrations (asbestos f/cc) from environmental and final clearance samples collected and analyzed by NIOSH Pub No. 84-100 Method 7400 (total f/cc) may be conducted using TEM in accordance with NIOSH Pub No. 84-100 Method 7402. When such confirmation is conducted, it shall be from the same sample filter used for the NIOSH Pub No. 84-100 Method 7400 PCM analysis. For all Contractor required environmental or final clearance air monitoring, confirmation of asbestos fiber concentrations, using NIOSH Pub No. 84-100 Method 7402, shall be at the Contractor's expense. Monitoring may be duplicated by the Government at the discretion of the Contracting Officer. Results of breathing zone samples shall be posted at the job site and made available to the Contracting Officer, after being reviewed by the Contractor's IH. The Contractor shall maintain a fiber concentration inside a regulated area equal to or less than 0.1 f/cc expressed as an 8 hour, time-weighted average (TWA) during the conduct of the asbestos abatement. If fiber concentration rises above 0.1 f/cc, work procedures shall be investigated by the Contractor's IH to determine the cause. At the discretion of the Contractor's IH, fiber concentration may exceed 0.1 f/cc but shall not exceed 1.0 f/cc expressed as an 8-hour TWA. The Contractor's workers shall not be exposed to an airborne fiber concentration in excess of 1.0 f/cc, as averaged over a sampling period of 30 minutes. Should either an environmental concentration of 1.0 f/cc expressed as an 8-hour TWA or a personal excursion concentration of 1.0 f/cc expressed as a 30-minute sample occur inside a regulated work area, the Contractor shall stop work immediately, notify the Contractor's IH and the Contracting Officer, and implement additional engineering controls and work practice controls to reduce airborne fiber levels below prescribed limits in the work area. Work shall not restart until authorized by the Contractor's IH.

The following schedule is to be followed by the Contractor's IH when

performing daily area air monitoring around the demolition/construction zone during the disturbance of non-friable asbestos-containing materials (ACM):

a. A minimum of five (5) air sampling locations distributed randomly along the exterior boundaries of the construction/demolition area.

b. A minimum of one (one) air sample shall be collected at each location per day during which demolition procedures are performed.

c. One of the air samples shall be placed in the clean room of the worker decontamination facility.

d. Air samples shall be analyzed by PCM (as specified above).

e. In situations in which an entire daily set of PCM air samples are termed "unreadable" due to excess debris and particulate loading of the filter media, the Contractor must have a minimum of one (1) sample of that set must be sent for TEM analysis.

f. At no time shall any one sampling location not have air monitoring readings or analyses performed for greater than a three (3) day period.

3.9.2 Initial Exposure Assessment

The Contractor's Designated IH shall conduct an exposure assessment immediately before or at the initiation of an asbestos abatement operation to ascertain expected exposures during that operation. The assessment shall be completed in time to comply with the requirements which are triggered by exposure data or the lack of a negative exposure assessment, and to provide information necessary to assure that all control systems planned are appropriate for that operation. The assessment shall take into consideration both the monitoring results and all observations, information or calculations which indicate employee exposure to asbestos, including any previous monitoring conducted in the workplace, or of the operations of the Contractor which indicate the levels of airborne asbestos likely to be encountered on the job. For Class I asbestos work, until the employer conducts exposure monitoring and documents that employees on that job will not be exposed in excess of PELs, or otherwise makes a negative exposure assessment, the Contractor shall presume that employees are exposed in excess of the PEL TWA and PEL Excursion Limit

3.9.3 Negative Exposure Assessment

The Contractor shall provide a negative exposure assessment for the specific asbestos job which will be performed. The negative exposure assessment shall be provided within one (1) day of the initiation of the project and conform to the following criteria:

a. Objective Data: Objective data demonstrating that the product or material containing asbestos minerals or the activity involving such product or material cannot release airborne fibers in concentrations exceeding the PEL-TWA and PEL-Excursion Limit under

those work conditions having the greatest potential for releasing asbestos;

b. Prior Asbestos Jobs: Where the Contractor has monitored prior asbestos jobs for the PEL and the PEL-Excursion Limit within 12 months of the current job, the monitoring and analysis were performed in compliance with asbestos standard in effect; and the data were obtained during work operations conducted under workplace conditions "closely resembling" the processes, type of material, control methods, work practices, and environmental conditions used and prevailing in the Contractor's current operations, the operations were conducted by employees whose training and experience are no more extensive that of employees performing the current job, and these data show that under the conditions prevailing and which will prevail in the current workplace there is a high degree of certainty that employee exposures will not exceed the PEL-TWA and PEL-Excursion Limit; or

c. Initial Exposure Monitoring: The results of initial exposure monitoring of the current job made from breathing zone air samples that are representative of the 8-hour PEL-TWA and 30-minute short-term exposures of each employee covering operations which are most likely during the performance of the entire asbestos job to results in exposures over the PELs.

3.9.4 Preabatement and Environmental Air Monitoring

Preabatement environmental air monitoring shall be established 1 day prior to the masking and sealing operations for each regulated area to determine background concentrations before abatement work begins. As a minimum, preabatement air samples shall be collected using NIOSH Pub No. 84-100 Method 7400, PCM at these locations: outside the building; inside the building, but outside the regulated area perimeter; and inside each regulated work area. One sample shall be collected for every 2000 square feet of floor space. At least two samples shall be collected outside the building: at the exhaust of the HEPA unit; and downwind from the abatement site. The PCM samples shall be analyzed within 24 hours; and if any result in fiber concentration greater than 0.01 f/cc, asbestos fiber concentration shall be confirmed using NIOSH Pub No. 84-100 Method 7402 (TEM).

3.9.5 Environmental Air Monitoring During Abatement

Until an exposure assessment is provided to the Contractor's IH demonstrating that the product or material containing asbestos minerals, or the abatement involving such product or material, cannot release airborne asbestos fibers in concentrations exceeding 0.01 f/cc as a TWA under those work conditions having the greatest potential for releasing asbestos, environmental air monitoring shall be conducted at locations and frequencies that will accurately characterize any evolving airborne asbestos fiber concentrations. The monitoring shall be at least once per shift at location including, but not limited to, close to the work inside a regulated area; preabatement sampling locations; outside entrances to a regulated area; close to glovebag operations; representative locations outside of the perimeter of a regulated area; inside clean room; and at the

exhaust discharge point of local exhaust system ducted to the outside of a containment (if used). If the sampling outside regulated area shows airborne fiber levels have exceeded background or 0.01 f/cc, whichever is greater, all work shall be stopped immediately, and the Contractor's IH notified. The condition causing the increase shall be corrected. Work shall not restart until authorized by the Contractor's IH.

3.9.6 Final Clearance Air Monitoring

Prior to conducting final clearance air monitoring, the Contractor's IH shall conduct a final visual inspection of the regulated area where asbestos abatement has been completed. The final visual inspection shall be as specified in SET-UP DETAIL SHEET 19. Final clearance air monitoring shall not begin until acceptance of the Contractor's final cleaning by the Contractor's Designated IH. The Contractor's IH shall conduct final clearance air monitoring using aggressive air sampling techniques as defined in EPA 560/5-85-024 or as otherwise required by federal and New York State Industrial Code Rule 56 requirements. The sampling and analytical method used will be NIOSH Pub No. 84-100Method 7400 (PCM) and Table 3 with confirmation of results by NIOSH Pub No. 84-100 Method 7402 (TEM).

3.9.6.1 Final Clearance Requirements, NIOSH PCM Method

For PCM sampling and analysis using NIOSH Pub No. 84-100 Method 7400, the fiber concentration inside the abated regulated area, for each airborne sample, shall be less than 0.01 f/cc. The abatement inside the regulated area is considered complete when every PCM final clearance sample is below the clearance limit. If any sample result is greater than 0.01 total f/cc, the asbestos fiber concentration (asbestos f/cc) shall be confirmed from that same filter using NIOSH Pub No. 84-100 Method 7402 (TEM) at Contractor's expense. If any confirmation sample result is greater than 0.01 asbestos f/cc, abatement is incomplete and recleaning is required. Upon completion of any required recleaning, resampling with results to meet the above clearance criteria shall be done.

3.9.6.2 Air Clearance Failure

Should clearance sampling results fail to meet the final clearance requirements, the Contractor shall pay all costs associated with all required recleaning, resampling and analysis until final clearance requirements are met.

3.9.7 Air-Monitoring Results and Documentation

Air sample fiber counting shall be completed and results provided within 24 hours (breathing zone samples), and 24 hours (environmental/clearance monitoring) after completion of a sampling period. The Contractor's IH shall be notified immediately of any airborne levels of asbestos fibers in excess of established requirements. Written sampling results shall be provided within 5 working days of the date of collection. The written results shall be signed by testing laboratory analyst, testing laboratory principal and the Contractor's IH's IH. The air sampling results shall be documented on a Contractor's daily air monitoring log. The daily air

monitoring log shall contain the following information for each sample:

a. Sampling and analytical method used;

b. Date sample collected;

c. Sample number;

d. Sample type: BZ = Breathing Zone (Personal), P = Preabatement, E = Environmental, C = Abatement Clearance;

e. Location/activity/name where sample collected;

f. Sampling pump manufacturer, model and serial number, beginning flow rate, end flow rate, average flow rate (L/min);

g. Calibration date, time, method, location, name of calibrator, signature.

h. Sample period (start time, stop time, elapsed time (minutes);

i. Total air volume sampled (liters);

j. Sample results (f/cc and S/mm square) if EPA methods are required for final clearance;

k. Laboratory name, location, analytical method, analyst, confidence level. In addition, the printed name and a signature and date block for the Industrial Hygienist who conducted the sampling and for the Industrial Hygienist who reviewed the daily air monitoring log verifying the accuracy of the information.

3.10 CLEARANCE CERTIFICATION

When asbestos abatement is complete and all ACM waste is removed from the regulated areas, and final clean-up is completed, the Contractor's IH will certify the areas as safe before the warning signs and boundary warning tape can be removed. After final clean-up and acceptable airborne concentrations are attained, but before the HEPA unit is turned off and the containment removed, the Contractor shall remove all pre-filters on the building HVAC system and provide new pre-filters. The Contractor shall dispose of such filters as asbestos contaminated materials. HVAC mechanical, and electrical systems shall be re-established in proper working order. The Contractor and the Contractor's IH will visually inspect all surfaces within the containment for residual material or accumulated debris. The Contractor shall reclean all areas showing dust or residual materials. The Contractor's IH will certify in writing that the area is safe before unrestricted entry is permitted. The Government will have the option to perform monitoring to certify the areas are safe before entry is permitted.

3.11 CLEANUP AND DISPOSAL

3.11.1 Title to ACM Materials

ACM material resulting from abatement work, except as specified otherwise, shall become the property of the Contractor and shall be disposed of as specified and in accordance with applicable federal, New York State and local regulations.

3.11.2 Collection and Disposal of Asbestos

Transportation of asbestos waste must be coordinated with the Solid Waste Management Branch. The contractor is responsible for completing waste shipment records. All ACM waste including contaminated wastewater filters, scrap, debris, bags, containers, equipment, and asbestos contaminated clothing, shall be collected and placed in leak-tight containers such as double plastic bags (see DETAIL SHEET 9A); sealed double wrapped polyethylene sheet (see DETAIL 9B); sealed fiberboard boxes (see DETAIL SHEET 9C); or other approved containers. Waste within the containers shall be wetted in case the container is breeched. Asbestos-containing waste shall be disposed of off Government property at an EPA and New York Department of Environmental Conservation (DEC) approved asbestos landfill For temporary storage, sealed impermeable containers shall be stored in an asbestos waste load-out unit or in a storage/transportation conveyance (i.e., dumpster, roll-off waste boxes, etc.) in a manner acceptable to and in an area assigned by the Contractor's IH. Procedure for hauling and disposal shall comply with 40 CFR 61 Subpart M, New York State 6 NYCRR Part 360 and Part 364 , regional, and local standards.

3.11.3 Scale Weight Measurement

Not Used

3.11.4 Weigh Bill and Delivery Tickets

Not Used

3.11.5 Weigh Bills and Delivery Tickets

Copies of weigh bills and delivery tickets shall be submitted to the Contractor's IH during the progress of work. The Contractor shall furnish the Contractor's IH scale tickets for each load of ACM weighed and certified (including ACM debris going to Category 360 landfills). These tickets shall include tare weight, identification mark for each vehicle weighed, date, time, and location of loading and unloading. Tickets shall be furnished at the point and time individual trucks arrive at the worksite. A master log of all vehicle loading shall be furnished for each day of loading operations. Before the final statement is allowed, the Contractor shall file with the Contractor's IH certified weigh bills and/or certified tickets and manifests of all ACM actually disposed by the Contractor for this Contract. The Contractor's IH shall submit all Original bills, tickets, and manifests to the Contracting Officer.

3.11.6 Asbestos Waste Shipment Record

The Contractor shall complete and provide the Contracting Officer final completed copies of the Waste Shipment Record for all shipments of waste

material as specified in 40 CFR 61 Subpart M and other required New York State waste manifest shipment records within 3 days of delivery to the landfill. Each Waste Shipment Record shall be signed and dated by the generator, the waste transporter and disposal facility operator.

TABLE 1
INDIVIDUAL WORK TASK DATA ELEMENTS

There is a separate data sheet for each individual work task. Sheet 1 of 4

1. WORK TASK DESIGNATION NUMBER 01
2. LOCATION OF WORK TASK: Roof Building B
3. BRIEF DESCRIPTION OF MATERIAL TO BE ABATED:Roof Tar Flashing, Roof Metal Flashing, & Roof Equipment Tar Flashing

   Type of Asbestos Chrysotile
   % asbestos content 2-15%
4. ABATEMENT TECHNIQUE TO BE USED: Removal
5. OSHA ASBESTOS CLASS DESIGNATION FOR WORK TASK: Class 2
6. EPA NESHAP FRIABILITY DESIGNATION FOR WORK TASK
   Friable _____Non-friable Category I _ __Non-friable Category II_____
7. FORM E _____ and CONDITION OF ACM: GOOD_ __FAIR____POOR X
8. QUANTITY: METERS_____, SQUARE METERS_____
8a. QUANTITY: LINEAR FT._____, SQUARE FT._Refer to Unit Price Schedule
9. RESPONSE ACTION DETAIL SHEET NUMBER FOR WORK TASK _7 _____
10. SET-UP DETAIL SHEET NUMBERS
    FOR WORK TASK ___09_____ __11_____, ____14___, _19____, _____, _____, _____, _____.

NOTES:

(1) Numeric sequence of individual work tasks (1,2,3,4, etc.) for each regulated area. Each category of EPA friability/OSHA class has a separate task.

(2) Specific location of work (building, floor, area, e.g. Building 1421, 2nd Floor, Rm 201)

(3) A description of material to be abated (example: horizontal pipe, cement wall panels, tile, stucco, etc.) type of asbestos (chrysotile, amosite, crocidolite, etc.); and % asbestos content.

(4) Technique to be used: Removal = REM; Encapsulation = ENCAP; Encasement = ENCAS; Enclosure = ENCL; Repair = REP.

(5) Class designation: Class I, II, III, or IV (OSHA designation).

(6) Friability of materials: Check the applicable EPA NESHAP friability designation.

(7) Form: Interior or Exterior Architectural = IA or EA; Mechanical/Electrical = ME. Condition: Good = G; Fair = F; Poor = P.

(8) Quantity of ACM for each work task in meters or square meters.

(8a) Quantity of ACM for each work task in linear feet or square feet.

(9) Response Action Detail Sheet specifies the material to be abated and the methods to be used. There is only one Response Action Detail Sheet for each abatement task.

(10) Set-up Detail Sheets indicate containment and control methods used

TABLE 1
INDIVIDUAL WORK TASK DATA ELEMENTS
in support of the response action (referenced in the selected Response Action Detail Sheet).

TABLE 1
INDIVIDUAL WORK TASK DATA ELEMENTS

There is a separate data sheet for each individual work task. Sheet __of 4

1. WORK TASK DESIGNATION NUMBER _____
2. LOCATION OF WORK TASK: Throughout on Building Components to be Demolished.
3. BRIEF DESCRIPTION OF MATERIAL TO BE ABATED Tar Vapor Barrier, waterproofing membrane and mastics _____
   Type of Asbestos Chrysotil _____
   % asbestos content 2-5 _____
4. ABATEMENT TECHNIQUE TO BE USE In-Place Demolitio _____
5. OSHA ASBESTOS CLASS DESIGNATION FOR WORK TASK_ Class _____
6. EPA NESHAP FRIABILITY DESIGNATION FOR WORK TASK
   Friable ____Non-friable Category I ____Non-friable Category II __
7. FORM E ___ and CONDITION OF ACM: GOOD __ ___FAIR____POO X__
8. QUANTITY: METERS_____, SQUARE METERS_____
8a. QUANTITY: LINEAR FT._____, SQUARE FT. Refer to Unit Price Schedule
9. RESPONSE ACTION DETAIL SHEET NUMBER FOR WORK TASK_ Sec. 02080
10. SET-UP DETAIL SHEET NUMBERS
    FOR WORK TASK ____9_____, __ 1 __, _____, _____, _____, _____, _____, _____.

NOTES:
(1) Numeric sequence of individual work tasks (1,2,3,4, etc.) for each regulated area. Each category of EPA friability/OSHA class has a separate task.
(2) Specific location of work (building, floor, area, e.g. Building 1421, 2nd Floor, Rm 201)
(3) A description of material to be abated (example: horizontal pipe, cement wall panels, tile, stucco, etc.) type of asbestos (chrysotile, amosite, crocidolite, etc.); and % asbestos content.
(4) Technique to be used: Removal = REM; Encapsulation = ENCAP; Encasement = ENCAS; Enclosure = ENCL; Repair = REP.
(5) Class designation: Class I, II, III, or IV (OSHA designation).
(6) Friability of materials: Check the applicable EPA NESHAP friability designation.
(7) Form: Interior or Exterior Architectural = IA or EA; Mechanical/Electrical = ME. Condition: Good = G; Fair = F; Poor = P.
(8) Quantity of ACM for each work task in meters or square meters.
(8a) Quantity of ACM for each work task in linear feet or square feet.
(9) Response Action Detail Sheet specifies the material to be abated and the methods to be used. There is only one Response Action Detail Sheet for each abatement task.
(10) Set-up Detail Sheets indicate containment and control methods used in support of the response action (referenced in the selected Response Action Detail Sheet).

TABLE 1
INDIVIDUAL WORK TASK DATA ELEMENTS

There is a separate data sheet for each individual work task. Sheet _of 4

1. WORK TASK DESIGNATION NUMBER _____
2. LOCATION OF WORK TASK: Building B
3. BRIEF DESCRIPTION OF MATERIAL TO BE ABATED:__
Window frame caulking and glazing compound and silver painted skylights

Type of Asbestos Chrysotil _____
% asbestos content 15 _____

4. ABATEMENT TECHNIQUE TO BE USED Remova _____
5. OSHA ASBESTOS CLASS DESIGNATION FOR WORK TASK Class _____
6. EPA NESHAP FRIABILITY DESIGNATION FOR WORK TASK
Friable ____Non-friable Category I ____Non-friable Category II __
7. FORM E ___ and CONDITION OF ACM: GOOD __ __FAIR____POO X__
8. QUANTITY: METERS_____, SQUARE METERS_____
8a. QUANTITY: LINEAR FT. Refer to Unit Price Schedul , SQUARE FT.____
9. RESPONSE ACTION DETAIL SHEET NUMBER FOR WORK TASK_____
10. SET-UP DETAIL SHEET NUMBERS
FOR WORK TASK ___ 9 _____, _ 1 _____, _ __, _____,
_____, _____, _____, _____.

NOTES:
(1) Numeric sequence of individual work tasks (1,2,3,4, etc.) for each regulated area. Each category of EPA friability/OSHA class has a separate task.
(2) Specific location of work (building, floor, area, e.g. Building 1421, 2nd Floor, Rm 201)
(3) A description of material to be abated (example: horizontal pipe, cement wall panels, tile, stucco, etc.) type of asbestos (chrysotile, amosite, crocidolite, etc.); and % asbestos content.
(4) Technique to be used: Removal = REM; Encapsulation = ENCAP; Encasement = ENCAS; Enclosure = ENCL; Repair = REP.
(5) Class designation: Class I, II, III, or IV (OSHA designation).
(6) Friability of materials: Check the applicable EPA NESHAP friability designation.
(7) Form: Interior or Exterior Architectural = IA or EA; Mechanical/Electrical = ME. Condition: Good = G; Fair = F; Poor = P.
(8) Quantity of ACM for each work task in meters or square meters.
(8a) Quantity of ACM for each work task in linear feet or square feet.
(9) Response Action Detail Sheet specifies the material to be abated and the methods to be used. There is only one Response Action Detail Sheet for each abatement task.
(10) Set-up Detail Sheets indicate containment and control methods used in support of the response action (referenced in the selected Response Action Detail Sheet).

TABLE 1
INDIVIDUAL WORK TASK DATA ELEMENTS

There is a separate data sheet for each individual work task. Sheet __of 4

1. WORK TASK DESIGNATION NUMBER _____
2. LOCATION OF WORK TASK: Base Bid: Building B.
3. BRIEF DESCRIPTION OF MATERIAL TO BE ABATED: Vinyl Asbestos Floor Tile & Associated Mastic
   Type of Asbestos Chrysotil _____
   % asbestos content 2-12 _____
4. ABATEMENT TECHNIQUE TO BE USED Remova _____
5. OSHA ASBESTOS CLASS DESIGNATION FOR WORK TASK Class 2
6. EPA NESHAP FRIABILITY DESIGNATION FOR WORK TASK
   Friable ____Non-friable Category I ____Non-friable Category II __
7. FORM _ I ___ and CONDITION OF ACM: GOOD __ ___FAIR____POO _X_
8. QUANTITY: METERS_____, SQUARE METERS_____
8a. QUANTITY: LINEAR FT._____, SQUARE FT. Refer to Unit Price Schedule
9. RESPONSE ACTION DETAIL SHEET NUMBER FOR WORK TASK 57, 59, 61
10. SET-UP DETAIL SHEET NUMBERS
    FOR WORK TASK ___ _____, _ ___, 1 ____, 1 _____,
    _____, _____, _____, _____.

NOTES:
(1) Numeric sequence of individual work tasks (1,2,3,4, etc.) for each regulated area. Each category of EPA friability/OSHA class has a separate task.
(2) Specific location of work (building, floor, area, e.g. Building 1421, 2nd Floor, Rm 201)
(3) A description of material to be abated (example: horizontal pipe, cement wall panels, tile, stucco, etc.) type of asbestos (chrysotile, amosite, crocidolite, etc.); and % asbestos content.
(4) Technique to be used: Removal = REM; Encapsulation = ENCAP; Encasement = ENCAS; Enclosure = ENCL; Repair = REP.
(5) Class designation: Class I, II, III, or IV (OSHA designation).
(6) Friability of materials: Check the applicable EPA NESHAP friability designation.
(7) Form: Interior or Exterior Architectural = IA or EA; Mechanical/Electrical = ME. Condition: Good = G; Fair = F; Poor = P.
(8) Quantity of ACM for each work task in meters or square meters.
(8a) Quantity of ACM for each work task in linear feet or square feet.
(9) Response Action Detail Sheet specifies the material to be abated and the methods to be used. There is only one Response Action Detail Sheet for each abatement task.
(10) Set-up Detail Sheets indicate containment and control methods used in support of the response action (referenced in the selected Response Action Detail Sheet).

TABLE 2

FORMULA FOR CALCULATION OF THE 95 PERCENT CONFIDENCE LEVEL
(Reference: NIOSH 7400)

Fibers/cc(01.95 percent CL) = X + (X) * (1.645) * (CV)

Where: X = ((E)(AC))/((V)(1000))

E = ((F/Nf) - (B/Nb))/Af

CV = The precision value; 0.45 shall be used unless the analytical laboratory provides the Contractor's IH with documentation (Round Robin Program participation and results) that the laboratory's precision is better.

AC = Effective collection area of the filter in square millimeters

V = Air volume sampled in liters

E = Fiber density on the filter in fibers per square millimeter

F/Nf = Total fiber count per graticule field

B/Nb = Mean field blank count per graticule field

Af = Graticule field area in square millimeters

TWA = C1/T1 + C2/T2 = Cn/Tn

Where: C = Concentration of contaminant

T = Time sampled.

TABLE 3

NI0SH METHOD 7400
PCM ENVIRONMENTAL AIR SAMPLING PROTOCOL (NON-PERSONAL)

Sample Location	Minimum No. of Samples	Filter Pore Size (Note 1)	Min. Vol. (Note 2) (Liters)	Sampling Rate (liters/min)
Inside Abatement Area	0.5/140 Square Meters (Notes 3 & 4)	0.45 microns	1500	2-10
Each Room in 1 Abatement Area Less than 140 Square meters		0.45 microns	1500	2-10
Field Blank	2	0.45 microns	0	0
Laboratory Blank	1	0.45 microns	0	0

Notes:

1. Type of filter is Mixed Cellulose Ester.

2. Ensure detection limit for PCM analysis is established at 0.005 fibers/cc.

3. One sample should be added for each additional 140 square meters. (The corresponding I-P units are 5/1500 square feet).

4. No less than 5 samples are to be taken per abatement area, plus two field blanks.

CERTIFICATE OF WORKER'S ACKNOWLEDGMENT

PROJECT NAME _____ CONTRACT NO. _____
PROJECT ADDRESS _____
CONTRACTOR FIRM NAME _____
EMPLOYEE'S NAME _____,_____,_____,_____-_____-_____
(Print) (Last) (First) (MI) Social Security Number

WORKING WITH ASBESTOS CAN BE DANGEROUS. INHALING ASBESTOS FIBERS HAS BEEN LINKED WITH TYPES OF LUNG DISEASE AND CANCER. IF YOU SMOKE AND INHALE ASBESTOS FIBERS, THE CHANCE THAT YOU WILL DEVELOP LUNG CANCER IS GREATER THAN THAT OF THE NONSMOKING PUBLIC.

Your employer's contract for the above project requires that you be provided and you complete formal asbestos training specific to the type of work you will perform and project specific training; that you be supplied with proper personal protective equipment including a respirator, that you be trained in its use; and that you receive a medical examination to evaluate your physical capacity to perform your assigned work tasks, under the environmental conditions expected, while wearing the required personal protective equipment. These things are to be done at no cost to you. By signing this certification, you are acknowledging that your employer has met these obligations to you. The Contractor's Designated Industrial Hygienist will check the block(s) for the type of formal training you have completed. Review the checked blocks prior signing this certification.

FORMAL TRAINING:

_____ a. For Competent Persons and Supervisors: I have completed EPA's Model Accreditation Program (MAP) training course, "Contractor/Supervisor" that meets this New York State's requirements.

b. For Workers:

_____ (1) For OSHA Class I work: I have completed EPA's MAP training course, "Worker" that meets this State's requirements.

_____ (2) For OSHA Class II work (where there will be abatement of more than one type of Class II materials i.e. roofing, siding, floor tile, etc.): I have completed EPA's MAP training course, "Worker" that meets this State's requirements.

(3) For OSHA Class II work (there will only be abatement of one type of Class II material):

_____ (a) I have completed an 8-hour training class on the elements of 29 CFR 1926 Section .1101(k)(9)(viii) in addition to the specific work practices and engineering controls of 29 CFR 1926 Section .1101(g) and hands-on training.

_____ (b) I have completed EPA's MAP training course, "Worker" that meets this State's requirements.

_____ (4) For OSHA Class III work: I have completed at least a 16-hour course consistent with EPA requirements for training of local education agency maintenance and custodial staff at 40 CFR 763 Section .92(a)(2) and the elements of 29 CFR 1926 Section .1101(k)(9)(viii) in addition to the specific work practices and engineering controls at 29 CFR 1926 Section .1101 and hands-on training.

CERTIFICATE OF WORKER'S ACKNOWLEDGMENT

PROJECT NAME _____ CONTRACT NO. _____
PROJECT ADDRESS _____
CONTRACTOR FIRM NAME _____
EMPLOYEE'S NAME _____,_____,_____,_____-_____-_____
(Print) (Last) (First) (MI) Social Security Number

WORKING WITH ASBESTOS CAN BE DANGEROUS. INHALING ASBESTOS FIBERS HAS BEEN LINKED WITH TYPES OF LUNG DISEASE AND CANCER. IF YOU SMOKE AND INHALE ASBESTOS FIBERS, THE CHANCE THAT YOU WILL DEVELOP LUNG CANCER IS GREATER THAN THAT OF THE NONSMOKING PUBLIC.

CERTIFICATE OF WORKER'S ACKNOWLEDGMENT

PROJECT NAME _____ CONTRACT NO. _____
PROJECT ADDRESS _____
CONTRACTOR FIRM NAME _____
EMPLOYEE'S NAME _____,_____,_____,_____-_____-_____
(Print) (Last) (First) (MI) Social Security Number

WORKING WITH ASBESTOS CAN BE DANGEROUS. INHALING ASBESTOS FIBERS HAS BEEN LINKED WITH TYPES OF LUNG DISEASE AND CANCER. IF YOU SMOKE AND INHALE ASBESTOS FIBERS, THE CHANCE THAT YOU WILL DEVELOP LUNG CANCER IS GREATER THAN THAT OF THE NONSMOKING PUBLIC.

_____ (5) For OSHA Class IV work: I have completed at least a 2-hr course consistent with EPA requirements for training of local education agency maintenance and custodial staff at 40 CFR 763 (a)(1) and the elements of 29 CFR 1926 Section .1101(k)(9)(viii) in addition to the specific work practices and engineering controls at 29 CFR 1926 Section .1101(g) and hands-on training.

_____ c. Workers, Supervisors and the Designated Competent Person: I have completed annual refresher training as required by EPA's MAP that meets this State's requirements.

PROJECT SPECIFIC TRAINING:

_____ I have been provided and have completed the project specific training required by this Contract. My employer's Designated Industrial Hygienist and Designated Competent Person conducted the training.

RESPIRATORY PROTECTION:

_____ I have been trained in accordance with the criteria in the Contractor's Respiratory Protection program. I have been trained in the dangers of handling
and breathing asbestos dust and in the proper work procedures and use and limitations of the respirator(s) I will wear. I have been trained in and will abide by the facial hair and contact lens use policy of my employer.

RESPIRATOR FIT-TEST TRAINING:

_____ I have been trained in the proper selection, fit, use, care, cleaning, maintenance, and storage of the respirator(s) that I will wear. I have been fit-tested in accordance with the criteria in the Contractor's Respiratory Program and have received a satisfactory fit. I have been assigned my individual respirator. I have been taught how to properly perform positive and negative pressure fit-check upon donning negative pressure respirators each time.

MEDICAL EXAMINATION:

_____ I have had a medical examination within the last twelve months which was paid for by my employer. The examination included: health history, pulmonary function tests, and may have included an evaluation of a chest x-ray. A physician made a determination regarding my physical capacity to perform work tasks on the project while wearing personal protective equipment including a respirator. I was personally provided a copy and informed of the results of that examination. My employer's Industrial Hygienist evaluated the medical certification provided by the physician and checked the appropriate blank

CERTIFICATE OF WORKER'S ACKNOWLEDGMENT

PROJECT NAME _____ CONTRACT NO. _____
PROJECT ADDRESS _____
CONTRACTOR FIRM NAME _____
EMPLOYEE'S NAME _____,_____,_____,_____-_____-_____
(Print) (Last) (First) (MI) Social Security Number
WORKING WITH ASBESTOS CAN BE DANGEROUS. INHALING ASBESTOS FIBERS HAS BEEN LINKED WITH TYPES OF LUNG DISEASE AND CANCER. IF YOU SMOKE AND INHALE ASBESTOS FIBERS, THE CHANCE THAT YOU WILL DEVELOP LUNG CANCER IS GREATER THAN THAT OF THE NONSMOKING PUBLIC.
below. The physician determined that there:

___ were no limitations to performing the required work tasks.
___ were identified physical limitations to performing the required work tasks.

Date of the medical examination _____

Employee Signature _____ date _____
Contractor's Industrial Hygienist Signature _____ date _____

-- End of Section --

Part 2, Setup Details

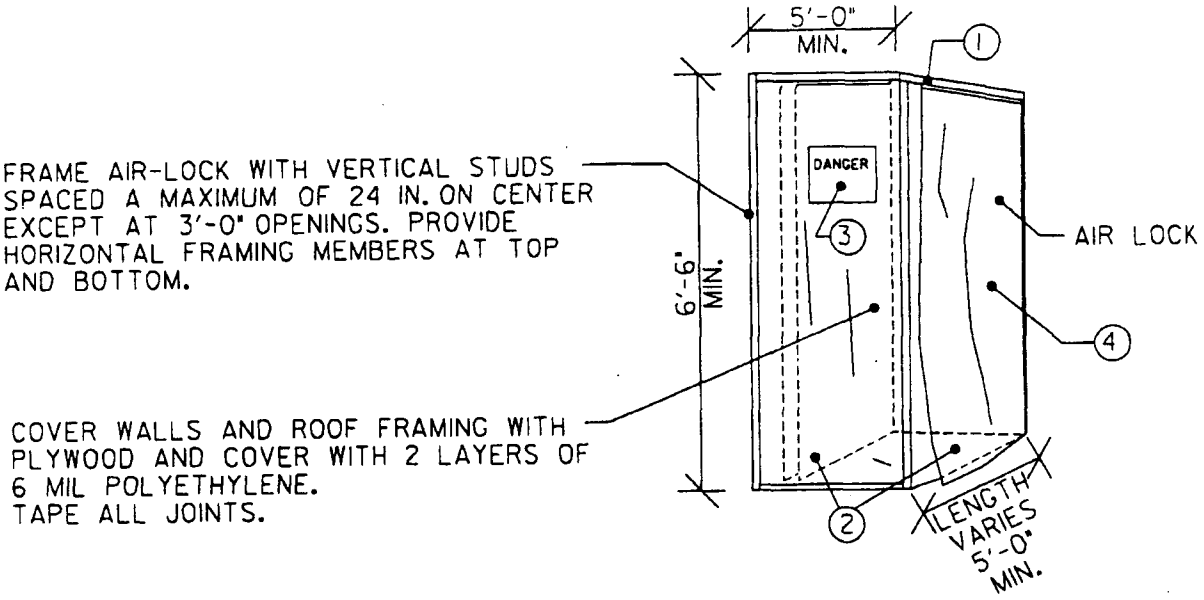

Air lock

1. Establish work area so that unauthorized entry is prevented; see sheet 11. Construct a wood frame. Install one layer of 6-mil polyethylene sheeting to structural members and two layers to the floor. Seal all edges of sheeting to wall, ceiling, and floor surfaces with duct tape.

2. Install triple flaps of 6-mil polyethylene sheeting at both doorways.

3. Install danger signs on each side of air lock area; see sheet 11.

4. Before leaving work area, remove outer suit. Place in a plastic bag; see sheet 9.

5. Enter air lock. Wet wipe respirator and wash hands with clean water from portable sprayer. Remove respirator, and place in a clean plastic bag. Proceed to shower, where inner suit may be removed.

Final clearance requirements. After abatement is completed, prepare area for final clearance. Contractor and Contracting Officer will certify visual inspection of work area on sheet 19, *Certification of Final Cleaning and Visual Inspection*. Contract designee(s) will conduct final air-clearance monitoring as required by the contract. Remove containment area upon instructions from the Contracting Officer, and treat as asbestos-contaminated material; see sheets 9 and 14.

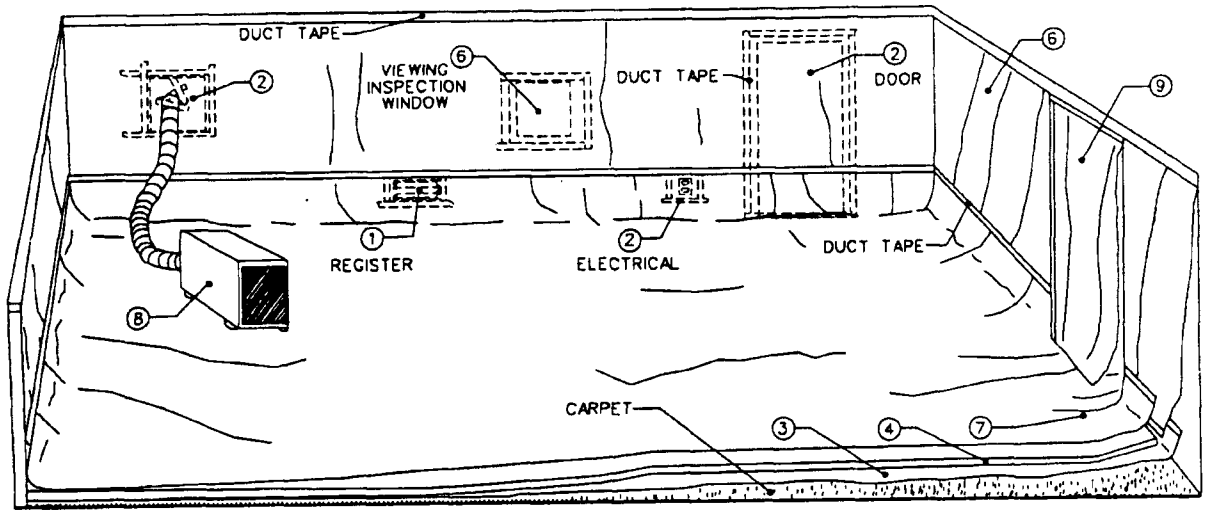

Installation of critical barrier and full containment area (for carpeted floors)

1. Establish work area so that unauthorized entry is prevented; see sheet 11. Eliminate airflow into containment area by isolating all supply and return air ducts from mechanical system. Lock doors and windows not required for access.

2. Install 6-mil polyethylene critical barriers over all windows, doors, wall openings, electrical outlets, etc. Secure with duct tape on all sides. HEPA vacuum furniture, fixtures, and equipment and remove from or protect in containment area, as specified by the contract.

3. Install first layer of 6-mil polyethylene on floor, extending the polyethylene 18 inches up wall. Secure with duct tape.

4. Install 0.5-inch plywood in order to protect 6-mil polyethylene underlay.

5. Prepare area as follows: turn off electrical power and remove light fixtures. Protect ceiling as required. HEPA vacuum plywood and walls.

6. Protect wall surface with 6-mil polyethylene from floor to ceiling where walls are not to be abated. Install viewing inspection windows, where feasible.

7. Place 6-mil polyethylene on top of plywood, extending polyethylene 18 inches up wall.

8. Install HEPA filter unit and duct work; see sheet 8.

9. Prepare door into decontamination or load-out unit. See sheet 22 for decontamination unit and sheet 20 for load-out unit. Doors that swing into the work area must be removed from hinges.

Final clearance requirements. After abatement has been completed, see sheet 16 for final clearance requirements.

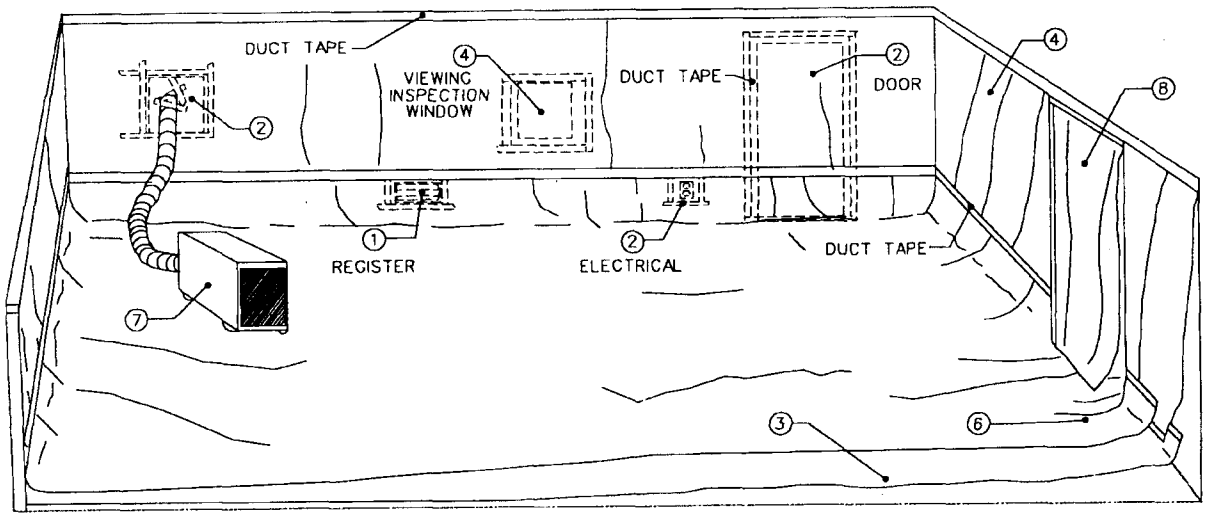

Installation of critical barrier and full containment area (for hard floor surfaces)

1. Establish work area so that unauthorized entry is prevented; see sheet 11. Eliminate airflow into containment area by isolation of all supply and return air ducts from mechanical system. Lock doors and windows not required for access.

2. Install 6-mil polyethylene critical barriers over all windows, doors, wall openings, electrical outlets, etc. Secure with duct tape on all sides. HEPA vacuum furniture, fixtures, and equipment and remove from or protect in containment area, as specified by the contract.

3. Install first layer of 6-mil polyethylene on floor, extending the polyethylene 18 inches up wall. Secure with duct tape.

4. Protect wall surface with 6-mil polyethylene from floor to ceiling. Install view inspection windows, where feasible.

5. Prepare area as follows: turn off electrical power and remove light fixtures. Protect ceiling as required. HEPA vacuum floor and walls.

6. Install top layer of 6-mil polyethylene.

7. Install HEPA filter unit and duct work; see sheet 8.

8. Prepare door into decontamination unit or load-out unit; see sheet 22 for decontamination unit and sheet 20 for load-out unit. Doors that swing into the work area must be removed from hinges.

Final clearance requirements. After abatement has been completed, see sheet 17 for final clearance requirements.

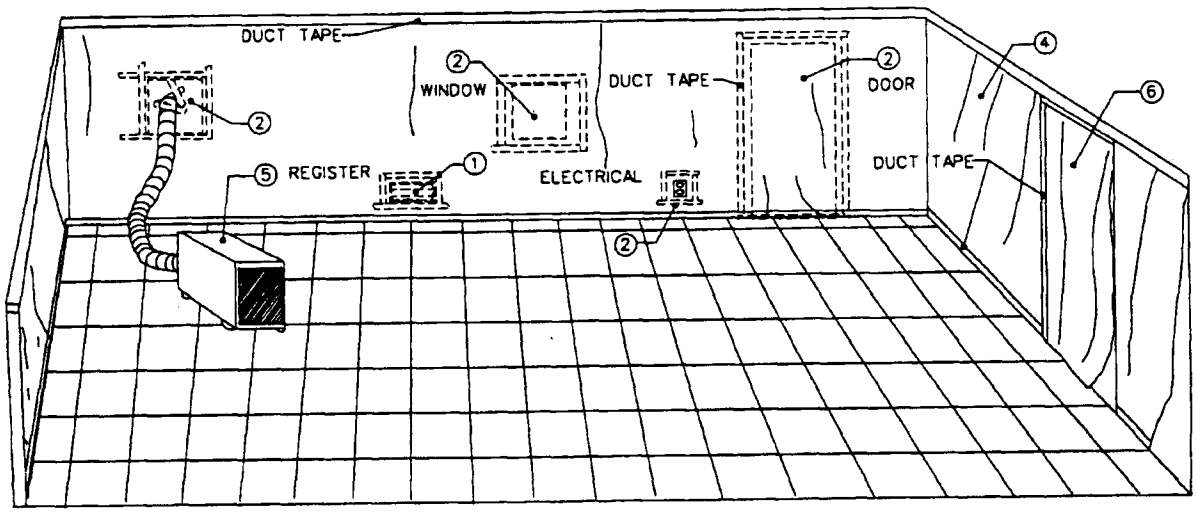

Installation of critical barrier and full containment area (for vinyl tile floors)

1. Establish work area so that unauthorized entry is prevented; see sheet 11. Eliminate airflow into containment area by isolating all supply and return air ducts from mechanical system. Lock doors and windows not required for access.

2. Install 6-mil polyethylene critical barriers over all windows, doors, wall openings, electrical outlets, etc. Secure with duct tape on all sides. HEPA vacuum furniture, fixtures, and equipment and remove from or protect in containment area, as specified by the contract.

3. Prepare area as follows: turn off electrical power and remove light fixtures. Protect ceiling as required. HEPA vacuum floors and walls.

4. Protect wall surface with 6-mil polyethylene from floor to ceiling. Install viewing inspection windows, where feasible.

5. Install HEPA filter unit and duct work; see sheet 8.

6. Prepare door into decontamination unit or load-out unit; see sheet 22 for decontamination unit and sheet 20 for load-out unit. Doors that swing into the work area must be removed from hinges.

Final clearance requirements. After abatement has been completed, see sheet 18 for final clearance requirements.

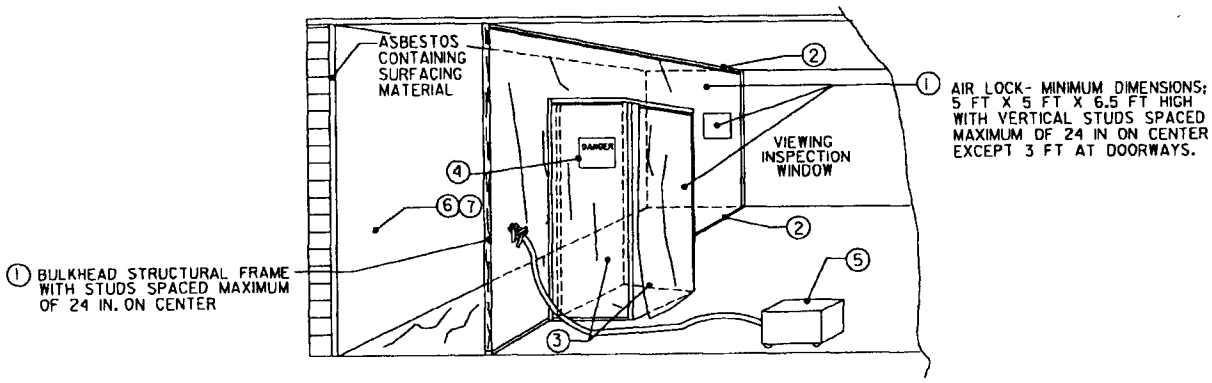

Single bulkhead containment area

1. Establish work area so that unauthorized entry is prevented; see sheet 11. Construct a structural frame for a bulkhead wall and an air lock. See sheet 1 for air lock requirements other than those identified in note 1 of this drawing. Bulkhead is to be parallel to the item requiring abatement. Attach structural frame to walls, floor, or ceiling as necessary for stability. Cover the frame with one layer and the floor with two layers of 6-mil polyethylene sheeting, sealing edges of polyethylene to walls, ceilings, and floor surfaces with duct tape. Install viewing inspection windows, where feasible.

2. Seal with duct tape all penetrations (typical) such as pipes, electrical conduit, or ducts.

3. Install triple 6-mil polyethylene flaps at both doorways. Place portable sprayer with clean water, disposable towels, and prelabeled disposal bag in air lock.

4. Install danger signs on outside of containment area; see sheet 11.

5. Install HEPA vacuum. Extend hose into mini-containment area for general vacuuming, negative air, and cleaning of disposable suit.

6. Accumulate all loose materials for disposal, and place in approved container; see Sheet 9. Apply labels; see sheet 14. Adequately wet clean all wall, floor, tool, and equipment surfaces.

7. Abatement worker must wear two disposable suits. Remove outer suit in work area and place in a plastic bag; see sheet 9. Enter air lock.

8. In air lock, wet wipe respirator and wash hands with clean water from portable sprayer. Remove respirator and place in clean plastic bag. Proceed to remote shower where inner suit may be removed.

Final clearance requirements. After abatement is completed, prepare area for final clearance. Contractor and Contracting Officer will certify visual inspection of work area on sheet 19, *Certification of Final Cleaning and Visual Inspection*. Contractor will apply lockdown encapsulant. Contract designee(s) will conduct final air-clearance monitoring as required by the contract. Remove containment area upon instructions from the Contracting Officer, and treat it as asbestos-contaminated material. Place in approved container; see sheet 9. Apply labels; see sheet 14. Dispose of as specified in the contract.

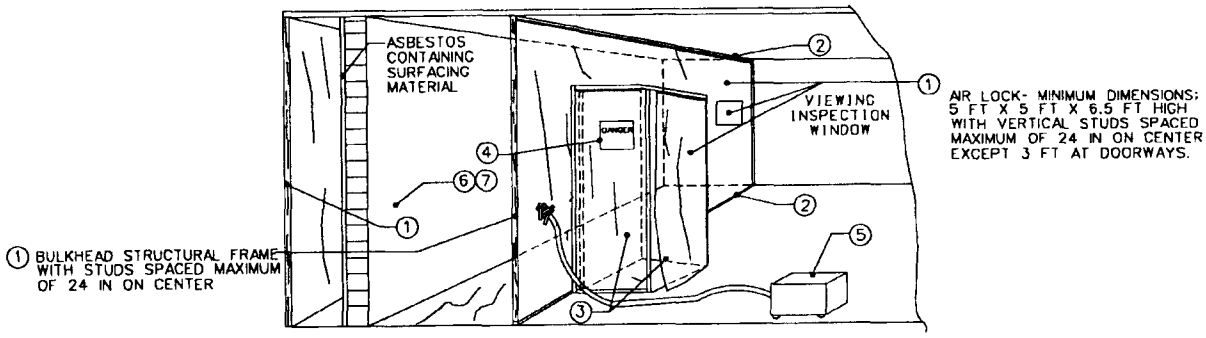

Double bulkhead containment area

1. Establish work area so that unauthorized entry is prevented; see sheet 11. Construct a structural frame for two bulkhead walls and an air lock. See sheet 1 for air lock requirements other than those identified in note 1 of this drawing. Bulkheads are to be parallel to the wall being removed. Attach structural frame to walls, floor, or ceiling as necessary for stability. Locate change room on the side opposite the asbestos-containing surface material. Cover the frame with one layer and the floor with two layers of 6-mil polyethylene sheeting and seal edges to walls, ceiling, and floor surfaces with duct tape. If a bulkhead is located outside the building, end walls and a roof will also be required. Install viewing inspection windows, where feasible.

2. Seal with duct tape all penetrations (typical) such as pipes, electrical conduit, or ducts.

3. Install triple 6-mil polyethylene flaps at doorways. Place portable sprayer with clean water, disposable towels, and prelabeled disposal bag in air lock.

4. Install danger signs on outside of containment area; see sheet 11.

5. Install HEPA vacuum; extend hose into mini-containment area for general vacuuming, negative air, and cleaning of disposable suit.

6. Accumulate all loose materials for disposal. Place in approved container; see sheet 9. Apply labels; see sheet 14. Adequately wet clean all wall, floor, tool, and equipment surfaces.

7. Abatement worker must wear two disposable suits. Remove outer suit in work area and place in a plastic bag; see sheet 9. Enter air lock.

8. In air lock, wet wipe respirator and wash hands with clean water from portable sprayer. Remove respirator and place in a clean plastic bag. Proceed to shower where inner suit may be removed.

9. After abatement is completed, prepare area for final clearance.

Final clearance requirements. After abatement is completed, prepare area for final clearance. Contractor and Contracting Officer will certify visual inspection of work area on sheet 19, *Certification of Final Cleaning and Visual Inspection*. Contractor will apply lockdown encapsulant. Contract designee(s) will conduct final air-clearance monitoring as required by the contract. Remove containment area upon instructions from the Contracting Officer, and treat it as asbestos- contaminated material. Place in approved container; see sheet 9. Apply labels; see sheet 14. Dispose of as specified in the contract.

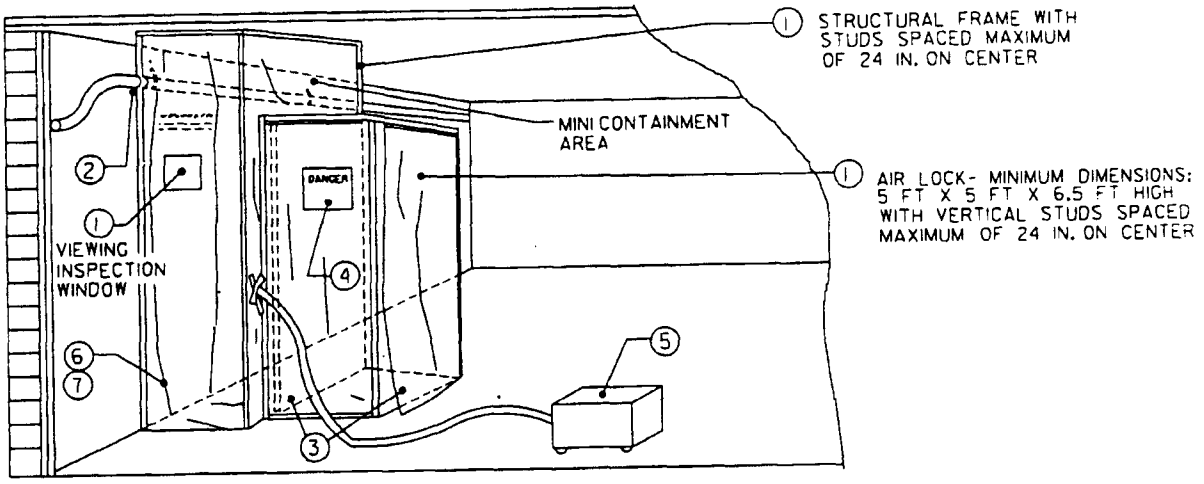

Mini-containment area

1. Establish work area so that unauthorized entry is prevented; see sheet 11. Construct a two-compartment wood frame around work area; install one layer 6-mil polyethylene sheeting to structural members and two layers 6-mil polyethylene sheeting to the floor. Seal all edges to wall, ceiling, and floor surfaces with duct tape. Install viewing inspection windows, where feasible.

2. Seal with duct tape all penetrations (typical) such as pipes, electrical conduit, or ducts.

3. Install triple 6-mil polyethylene flaps at both doorways. Place portable sprayer with clean water, disposable towels, and prelabeled disposal bag in air lock.

4. Install danger signs on outside of containment area. See sheet 11.

5. Install HEPA vacuum; extend hose into mini-containment area for general vacuuming, negative air, and cleaning of disposable suit.

6. Accumulate all loose materials for disposal. Place in approved container; see sheet 9. Apply labels; see sheet 14. Adequately wet clean all wall, floor, tool, and equipment surfaces.

7. Abatement worker must wear two disposable suits. Remove outer suit in work area and place in a plastic bag; see sheet 9. Enter air lock.

8. In air lock, wet wipe respirator and wash hands with clean water. Remove respirator and place in a clean plastic bag. Proceed to remote shower unit where inner suit may be removed.

Final clearance requirements. After abatement is completed, prepare area for final clearance. Contractor and Contracting Officer will certify visual inspection of work area on sheet 19, ***Certification of Final Cleaning and Visual Inspection***. Contractor will apply lockdown encapsulant. Contract designee(s) will conduct final air-clearance monitoring as required by the contract. Remove containment area upon instructions from the Contracting Officer, and treat it as asbestos- contaminated material. Place in approved container; see sheet 9. Apply labels, see sheet 14. Dispose of as specified in the contract.

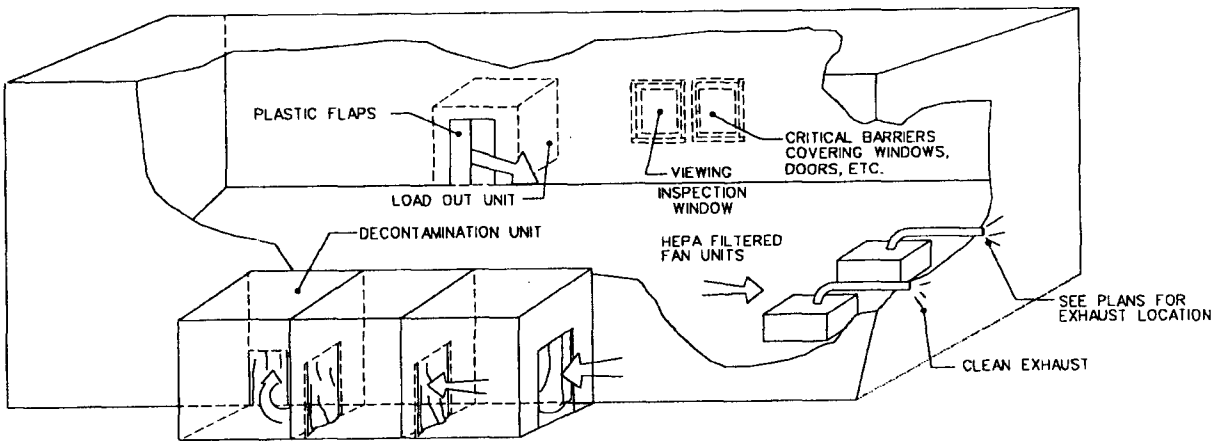

Ventilation of containment area and decontamination unit, using HEPA filters

1. Install a ventilation system in the containment area that draws the air supply through the decontamination and load-out units. See sheets 20 and 22.

2. Operate ventilation system 24 hours a day from start of abatement through final clearance.

3. Place at the decontamination unit entrance a pressure gauge that measures differential pressure between abatement and ambient areas. Gauge must be read hourly and logged or continuously recorded.

4. The ventilation system must create, as a minimum, a negative pressure of 0.02 inches of water inside the containment area (relative to the outside of the containment area) and must be sized for a minimum of four air changes per hour or more, as specified in the contractor's asbestos hazard abatement plan.

5. Locate HEPA filters in order to prevent dead air pockets.

6. Exhaust filtered air to outside of building, unless otherwise approved by the Contracting Officer.

Final clearance requirements: For final clearance, remove ventilation system upon instruction from the Contracting Officer and relocate to equipment room of decontamination unit. Thoroughly HEPA vacuum unit and ducting. Adequately wet clean all surfaces and wheels of unit(s). Collect all waste debris and unit filters, and treat as asbestos-contaminated material, placing in approved container; see sheet 9. Apply labels; see sheet 14. Dispose of waste as required by the contract. Wrap unit in one layer of 6-mil polyethylene sheeting, and seal with duct tape before removing from job location.

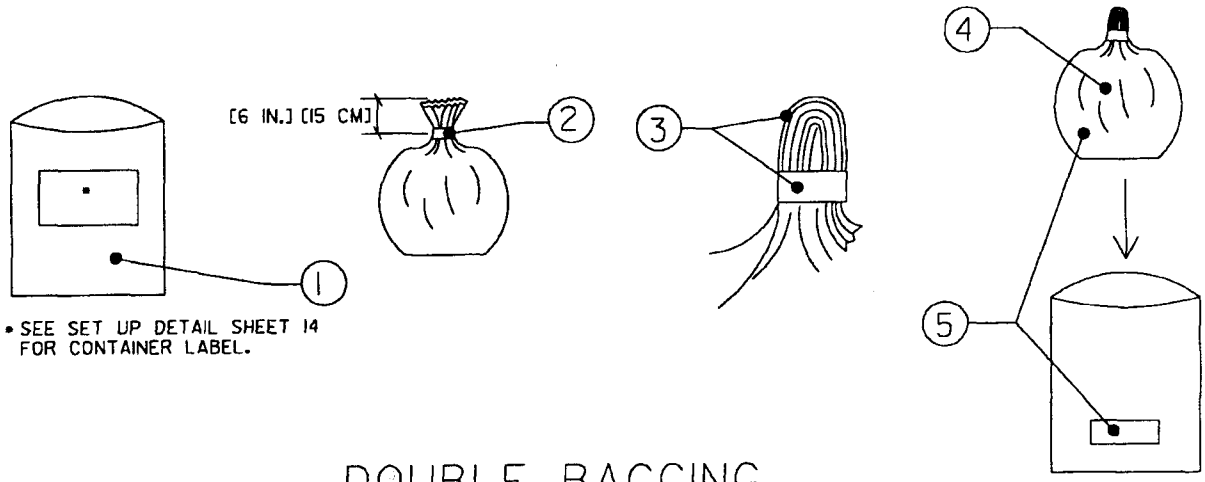

DOUBLE BAGGING

Containers—double bagging

1. Place the still-wet asbestos-containing and asbestos-contaminated material into a prelabled 6-mil polyethylene bag. Do not overfill. Do not use bag for asbestos-containing or asbestos-contaminated material that could puncture the bag. (See sheet 9C for packaging items that could puncture bags.)

2. Evacuate with HEPA vacuum, and seal collapsed bag by twisting top [6 in] [15 cm] closed and wrapping with a minimum of two layers of duct tape.

3. Twist top and fold over. Apply second wrap of duct tape.

4. Adequately wet clean outside of disposal bag by wet wiping, and take bag to the equipment and staging area.

5. Place bag inside a second prelabled 6-mil polyethylene bag.

6. Seal outer bag by repeating steps 2 and 3 above. Take bag to load-out unit; see sheet 20.

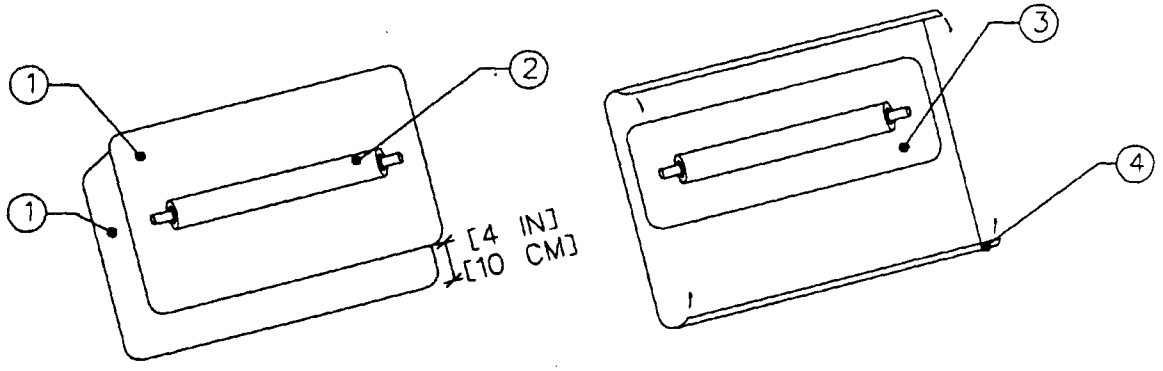

Containers—leak-tight wrapping

1. Place two layers of 6-mil polyethylene sheet on surface so that the bottom layer is offset [4 in] [10 cm] from the top layer.

2. Place the still-wet asbestos-containing or asbestos-contaminated material that is too large (boiler, vessel, pipe segment, etc.) to be placed in disposal bags on the top layer of polyethylene.

3. Wrap the top layer tightly around the contaminated material. Seal all edges of the top layer of sheeting with duct tape. Apply labels; see sheet 14.

4. Repeat procedure with bottom layer, including labeling. Take to load-out unit; see sheet 20.

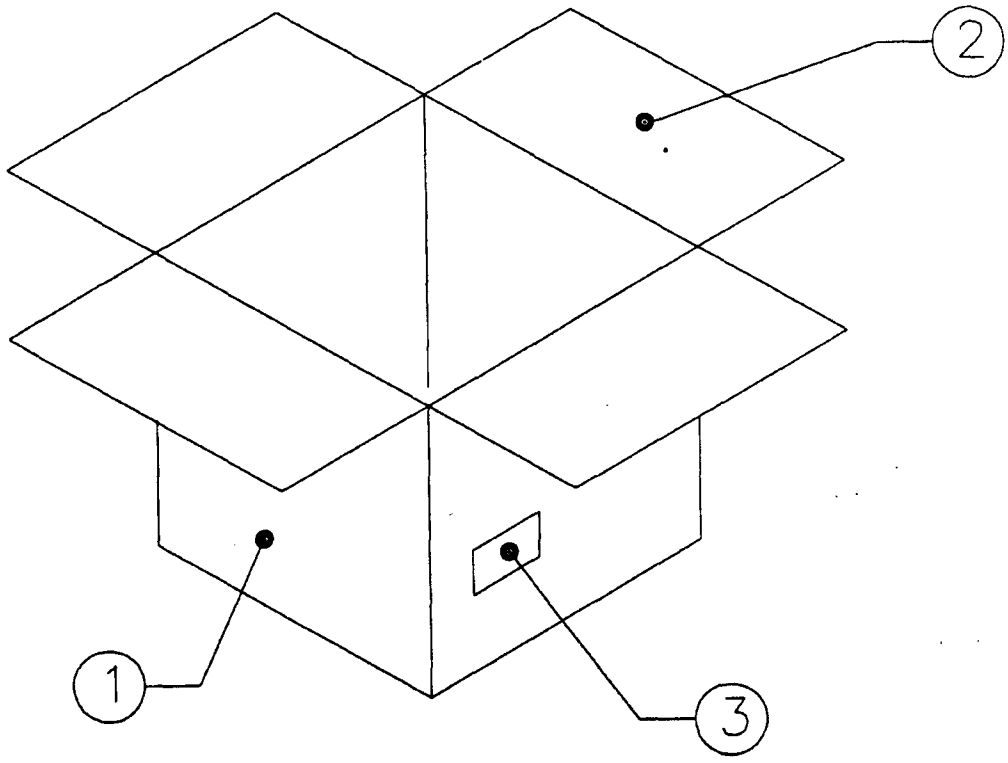

Containers—corrugated cardboard boxes

1. Place still-wet asbestos-containing or asbestos-contaminated material that could puncture disposal bags into heavy-duty corrugated cardboard boxes coated with plastic or wax that will retard deterioration from moisture.

2. Close flaps, and seal with duct tape.

3. Apply labels; see sheet 14. Place box into disposal bags; see sheet 9A. Take to load-out unit; see sheet 20.

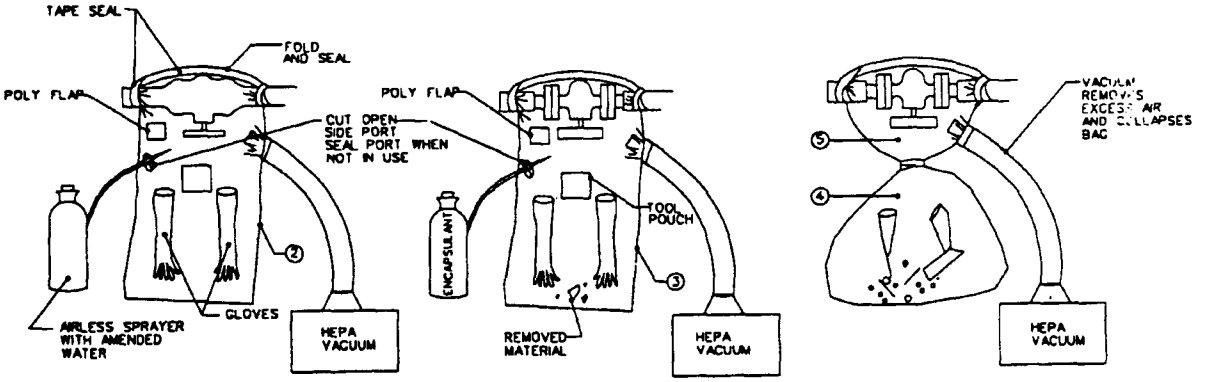

Glove bag

1. Construct modified containment area in accordance with sheet 21. NOTE: Inspect for structural integrity the insulation material adjacent to section being removed, since glove bag removal procedure is not appropriate if it will cause asbestos fiber release from adjacent asbestos-containing material.

2. Put tools and rags inside glove bag. Insulation adjacent to the asbestos-containing material being removed must be adequately wet cleaned and sprayed with an encapsulant before placing glove bag over the area to be removed. Install glove bag according to manufacturer's instructions. (NOTE: Negative-air glove bags may be used if first approved by Contracting Officer. Manufacturer procedures for negative-air glove bags will vary from procedures identified on this sheet.) Install HEPA filter vacuum cleaner with hose ducted into bag. Seal with duct tape. Smoke test for leaks. Soak insulation with amended water.

3. Remove insulation and clean exposed metal surfaces. Encapsulate exposed ends of insulation and metal surfaces. Adequately wet clean glove bag surfaces to below tool pouch.

4. Grasp tools in pouch and withdraw by pulling glove inside out. Twist glove above encased tools to create a constriction, and tape constricted area with duct tape. Cut through middle of taped area so that tools and glove bag will both remain sealed. Place encased tools into tool pouch of next glove bag or decontaminate by water immersion.

5. Evacuate glove bag, using HEPA vacuum. Twist bag to create a constriction below tool pouch. Wrap constricted area with duct tape. Cut bag [4 in] [10 cm] above constriction. Double bag cut off portion of bag; see sheet 9. Apply labels; see sheet 14. Cap and seal end of HEPA vacuum hose in order to prevent incidental fiber release.

6. Remove remaining portion of glove bag. Place in approved container; see sheet 9. Apply labels; see sheet 14. Dispose as asbestos-contaminated waste.

Final clearance requirements: For final clearance, Contractor and Contracting Officer will certify visual inspection of work area on sheet 19, *Certification of Final Cleaning and Visual Inspection*. Contract designee(s) will conduct final air-clearance monitoring as required by the contract.

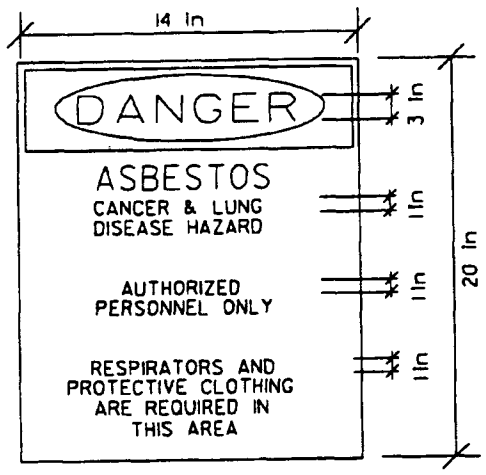

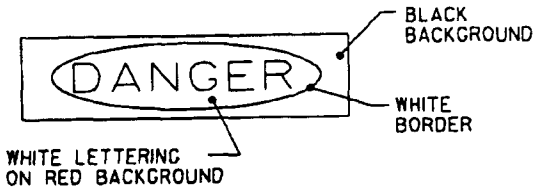

AREA WARNING SIGNS AND WARNING TAPE

DETAIL (OIL)

Area warning signs and warning tape

1. Provide and install [4 mil] [0.10 mm] polyethylene warning tape at locations shown on the abatement area plan.

2. Warning tape is to be attached to wood or metal posts at [10 ft] [300 cm] on center. Tape must be [3 ft] [100 cm] from ground.

3. Attach both warning signs at each entrance of the work area and at [33 yd] [30 m] on center where security fencing is installed.

4. Warning signs must be in English and other languages required by the contract.

5. Install at eye level.

FIBER CONCENTRATION	MINIMUM REQUIRED RESPIRATOR	
NOT IN EXCESS OF 1 FIBER/CC	HALF-MASK AIR PURIFYING RESPIRATOR WITH HEPA FILTERS	
NOT IN EXCESS OF 5 FIBERS/CC	FULL FACEPIECE AIR-PURIFYING RESPIRATOR WITH HEPA FILTERS	
NOT IN EXCESS OF 10 FIBERS/CC	LOOSE FITTING HELMET OR HOOD, POWERED AIR-PURIFYING RESPIRATOR WITH HEPA FILTERS	
NOT IN EXCESS OF 10 FIBERS/CC	POWERED AIR-PURIFYING RESPIRATOR WITH FULL FACEPIECE AND HEPA FILTER	
NOT IN EXCESS OF 10 FIBERS/CC	LOOSE FITTING HELMET OR HOOD, SUPPLIED AIR RESPIRATOR OPERATED IN CONTINUOUS FLOW MODE WITH BACK-UP HEPA FILTER	
NOT IN EXCESS OF 10 FIBERS/CC	SUPPLIED AIR RESPIRATOR WITH FULL FACEPIECE OPERATED IN CONTINUOUS FLOW MODE WITH BACK-UP HEPA FILTER	
NOT IN EXCESS OF 100 FIBERS/CC	FULL FACEPIECE SUPPLIED AIR RESPIRATOR OPERATED IN PRESSURE-DEMAND MODE WITH BACK-UP HEPA FILTER	
GREATER THAN 100 FIBERS/CC OR UNKNOWN CONCENTRATION	FULL FACEPIECE SUPPLIED-AIR RESPIRATOR OPERATED IN PRESSURE-DEMAND MODE WITH AUXILIARY POSITIVE-PRESSURE SELF-CONTAINED BREATHING APPARATUS	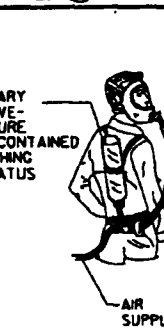

Respiratory protection table

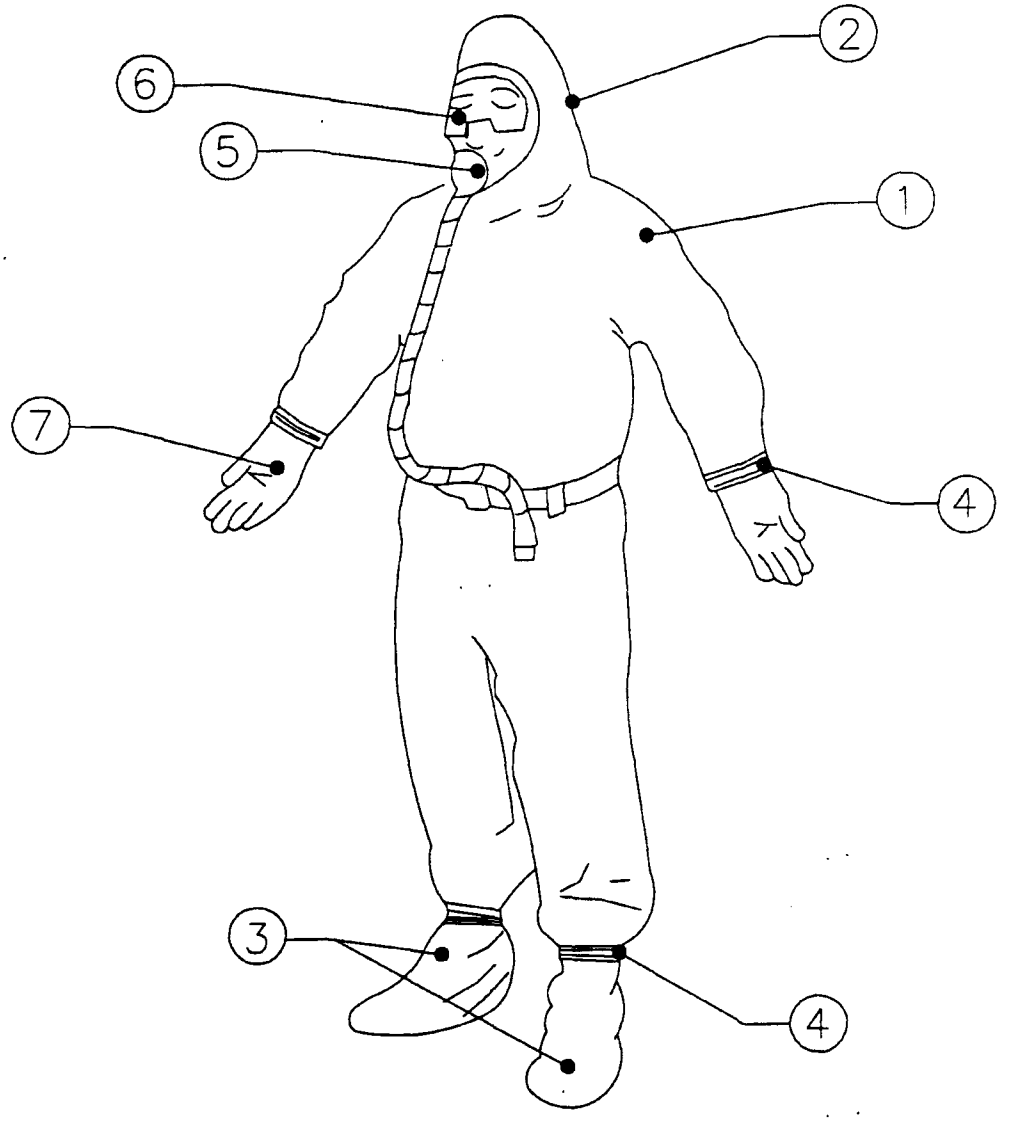

Protective clothing

1. Disposable or reusable full body suit with elastic around hood and shoe cover openings is required or as otherwise specified in the contract.

2. Hood shall be worn over respirator's head and neck straps.

3. Shoe covers shall be worn over work shoes.

4. Cuffs shall be taped with duct tape at wrists and ankles in order to prevent infiltration.

5. Cartridge-type air-purifying HEPA filter respirator is minimal requirement. Type shall be selected in accordance with sheet 12.

6. If eye protection is not integral with respirator, protection goggles are required.

7. Rubber work gloves are recommended to be worn alone or under outer work gloves provided for hand and operation safety.

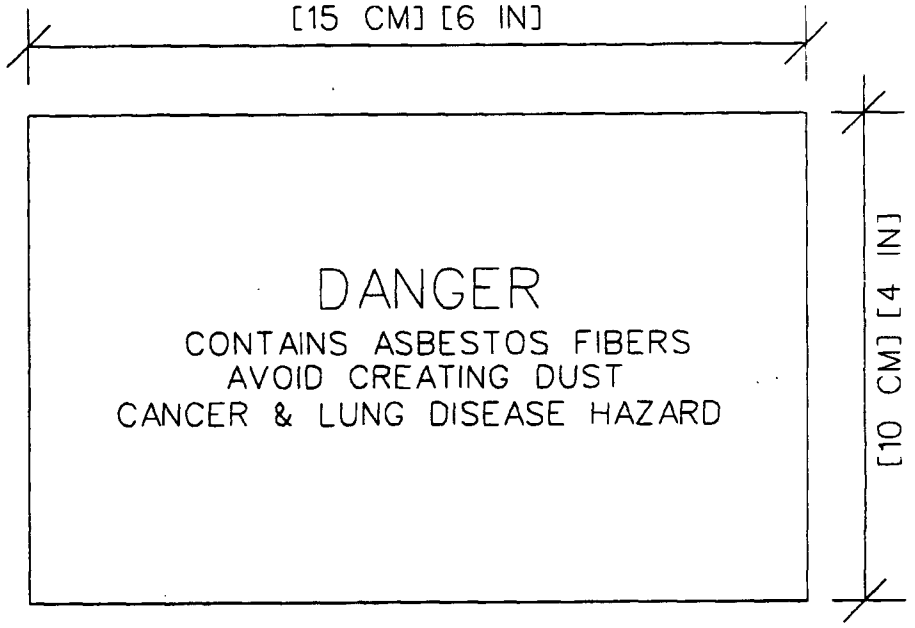

Disposal container label

Attach warning labels to each disposal container removed from abatement area.

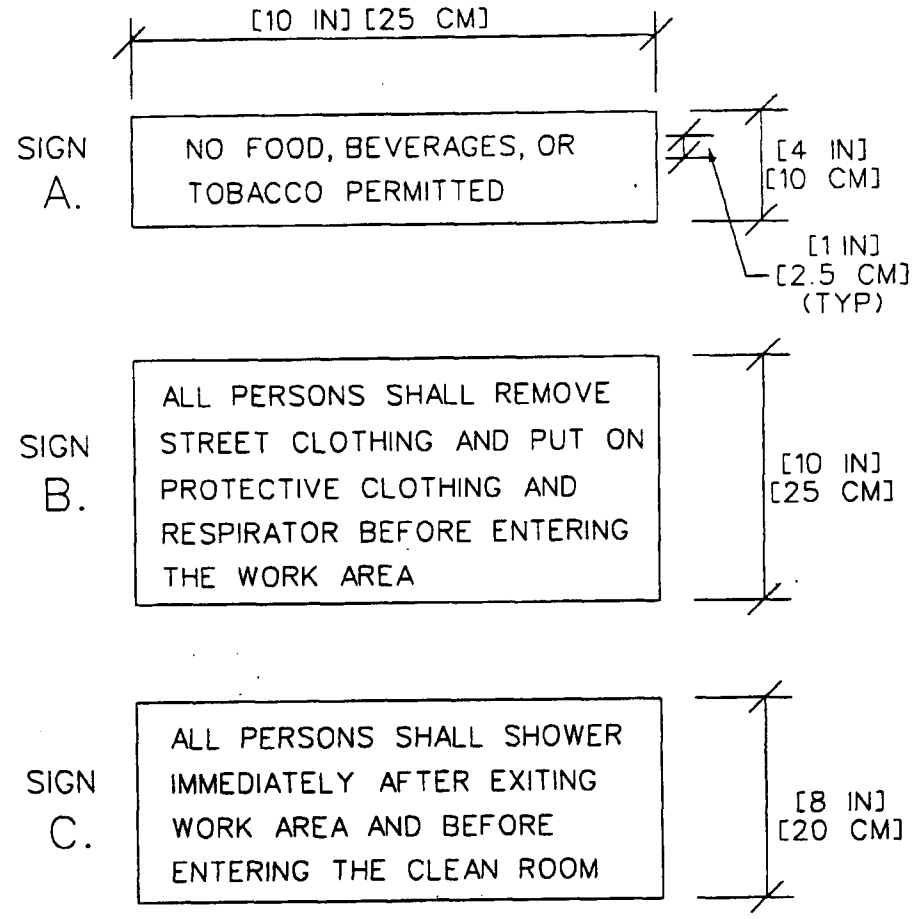

Decontamination unit signage

1. Provide signs in English and other languages required by the contract.
2. Install at eye level.

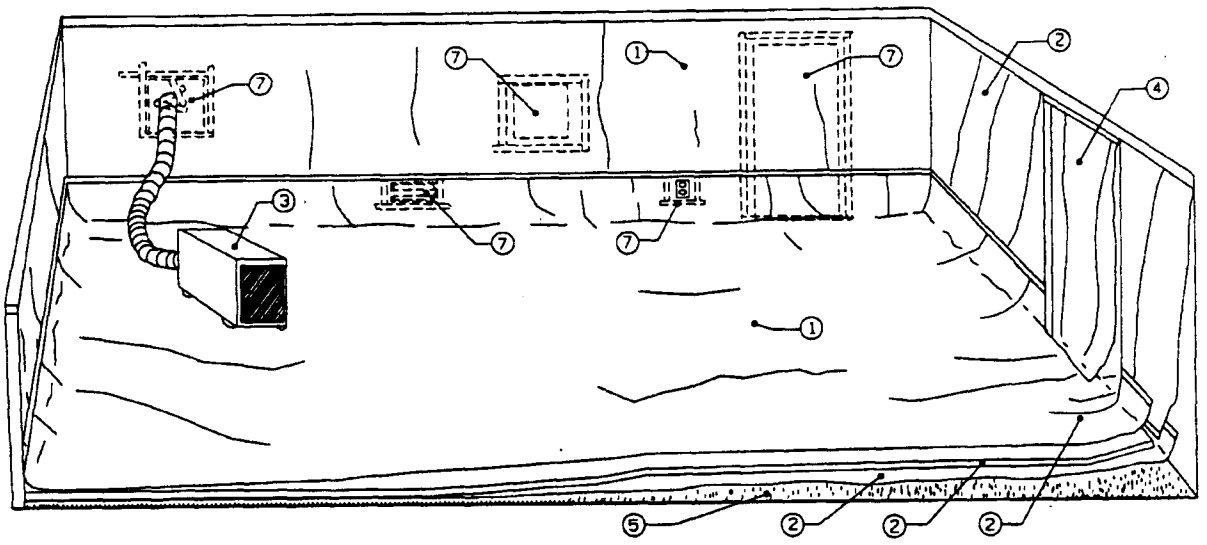

Preparation of full containment area for final clearance (for carpeted floors)

1. Accumulate all loose material for disposal. Place material in approved container; see sheet 9. Apply labels; see sheet 14. Adequately wet clean and HEPA vacuum all wall, floor, and equipment surfaces.

2. Contractor and contracting officer will certify visual inspection of work area on sheet 19, *Certification of Final Clearing and Visual Inspection*.

3. Apply lockdown encapsulant.

4. Remove polyethylene from walls, floor, and plywood. HEPA vacuum plywood before removal. Critical barriers sealing all windows, doors, wall openings, electrical outlets, etc., are to remain. Remove any temporary equipment enclosures used; see sheet 24. Treat polyethylene as asbestos-contaminated material. Place in approved container; see sheet 9 for leak-tight wrapping. Apply labels; see sheet 14. NOTE: With approval from the Contracting Officer, uncontaminated plywood can be treated as ordinary construction waste; otherwise, treat as asbestos-contaminated material.

5. HEPA filter unit remains in place and operating.

6. Door into contamination unit or load-out room remains.

7. HEPA vacuum carpet.

8. Prepare area for final clearance.

9. Contractor and Contracting Officer will recertify visual inspection of work area on sheet 19, *Certification of Final Cleaning and Visual Inspection*.

10. Contract designee(s) will conduct final air-clearance monitoring as required by the contract.

11. Upon instruction from Contracting Officer, shut down HEPA filter ventilation system, detach duct work, move system to equipment room of decontamination unit, clear and dispose of waste; see sheet 8. Remove critical barrier and place in approved container; see sheet 9. Apply labels; see sheet 14. Dispose of waste as asbestos-contaminated material.

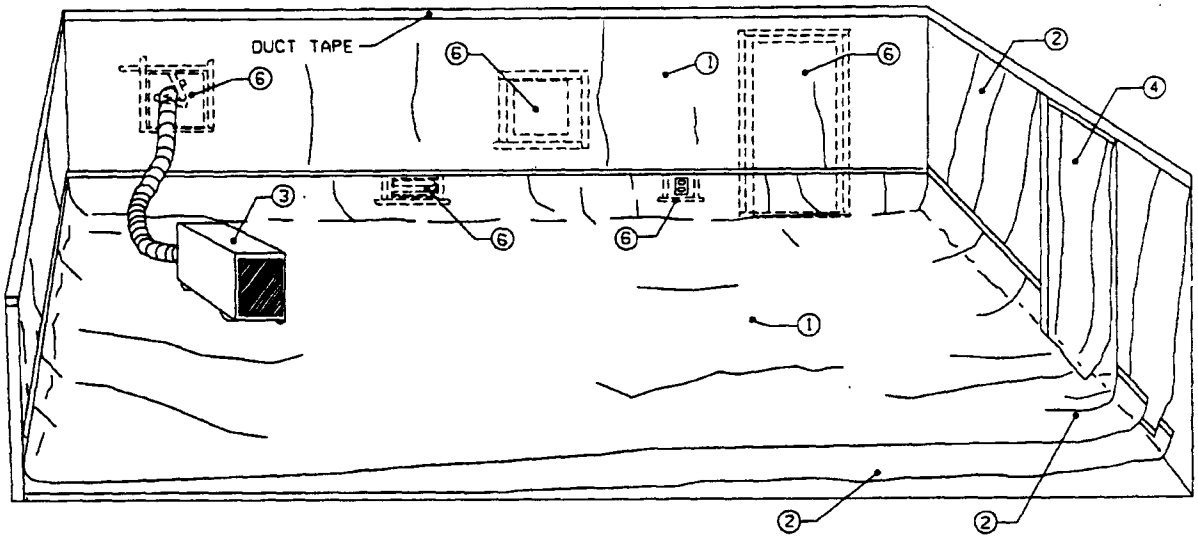

Preparation of full containment area for final clearance (for hard-surfaced floors)

1. Accumulate all loose material for disposal. Place in approved container; see sheet 9. Apply labels; see sheet 14. Adequately wet clean and HEPA vacuum all wall, floor, and equipment surfaces.

2. Contractor and contracting officer will certify visual inspection of work area on sheet 19, *Certification of Final Clearing and Visual Inspection.*

3. Apply lockdown encapsulant.

4. Remove polyethylene on walls and floor. Critical barriers sealing all windows, doors, wall openings, electrical outlets, etc., are to remain. Remove any temporary equipment enclosures used; see sheet 24. Treat polyethylene as asbestos-contaminated material. Place in approved container; see sheet 9 for leak-tight wrapping. Apply labels; see sheet 14.

5. HEPA filter unit remains in place and operating.

6. Door into decontamination unit or load-out room remains.

7. Prepare area for final clearance.

8. Contractor and Contracting Officer will recertify visual inspection of work area on sheet 19, *Certification of Final Cleaning and Visual Inspection.*

9. Contract designee(s) will conduct final air-clearance monitoring as required by the contract.

10. Upon instruction from Contracting Officer, shut down HEPA filter ventilation system, detach duct work, move system to equipment room of decontamination unit, clear and dispose of waste; see sheet 8. Remove critical barrier and place in approved container; see sheet 9. Apply labels; see sheet 14. Dispose of waste as asbestos-contaminated material.

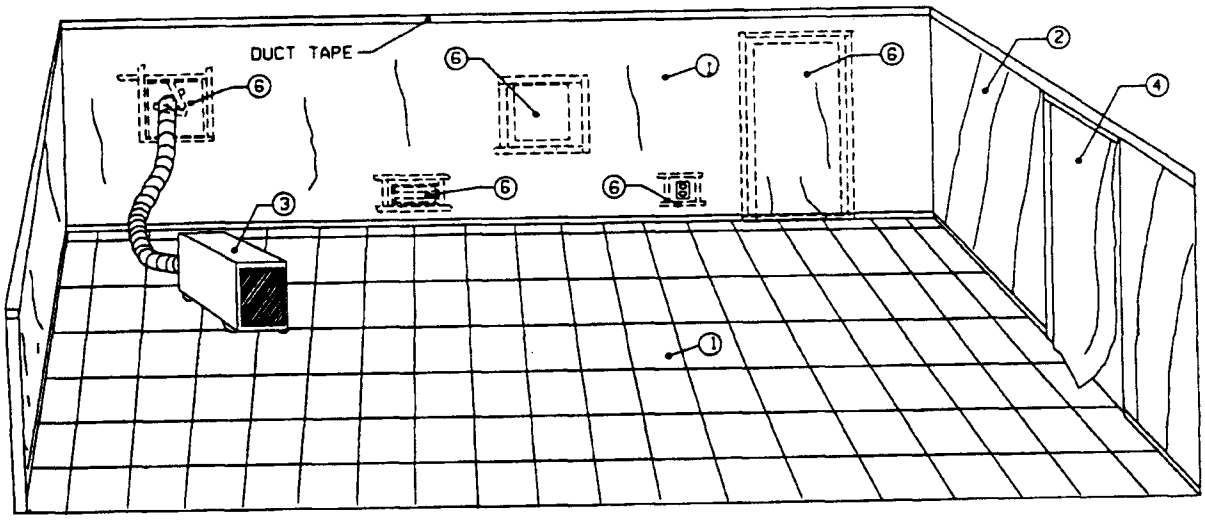

Preparation of containment area for final clearance (for vinyl tile floors)

1. Accumulate all loose material for disposal; see sheet 9. Apply labels; see sheet 14. Adequately wet clean all wall, floor, and equipment surfaces.

2. Contractor and contracting officer will certify visual inspection of work area on sheet 19, *Certification of Final Clearing and Visual Inspection.*

3. Apply lockdown encapsulant.

4. Remove polyethylene from walls. Critical barriers sealing all windows, doors, wall openings, electrical outlets, etc., are to remain. Remove any temporary equipment enclosures used; see sheet 24. Treat polyethylene as asbestos-contaminated material. Place in approved container; see sheet 9 for leak-tight wrapping. Apply labels; see sheet 14.

5. HEPA filter unit remains in place and operating.

6. Door into decontamination unit or load-out room remains.

7. Prepare area for final clearance.

8. Contractor and Contracting Officer will recertify visual inspection of work area on sheet 19, *Certification of Final Cleaning and Visual Inspection.*

9. Contract designee(s) will conduct final air-clearance monitoring as required by the contract.

10. Upon instruction from Contracting Officer, shut down HEPA filter ventilation system, detach duct work, move system to equipment room of decontamination unit, clear and dispose of waste; see sheet 8. Remove critical barrier and place in approved container; see sheet 9. Apply labels; see sheet 14. Dispose of waste as asbestos-contaminated material.

Certification of Final Cleaning And Visual Inspection

Individual abatement task as identified in paragraph, Description of Work _____

In accordance with the cleaning and decontamination procedures specified in the Contractor's asbestos hazard abatement plan and this contract, the Contractor hereby certifies that he/she has thoroughly visually inspected the decontaminated regulated work area (all surfaces, including pipes, beams, ledges, walls, ceiling, floor, decontamination unit, etc.) in accordance with ASTM E1368, *Standard Practice for Visual Inspection of Asbestos Abatement Projects*, and has found no dust, debris, or asbestos-containing material residue.

BY: (Contractor's signature) _____ Date _____

Print name and title _____

(Contractor's Onsite Supervisor signature) _____ Date _____

Print name and title _____

(Contractor's Industrial Hygienist signature) _____ Date _____

Print name and title _____

Contractor's CQCM Acceptance or Rejection

The Contractor's CQCM hereby determines that the Contractor has performed final cleaning and visual inspection of the decontaminated regulated work area (all surfaces, including pipes, beams, ledges, walls, ceiling, floor, decontamination unit, etc.) and by quality assurance inspection, finds the Contractor's final cleaning to be:

☐ Acceptable

☐ Unacceptable, Contractor instructed to reclean the regulated work area.

BY: Contractor's CQCM Representative

Signature _____ Date _____

Print name and title _____

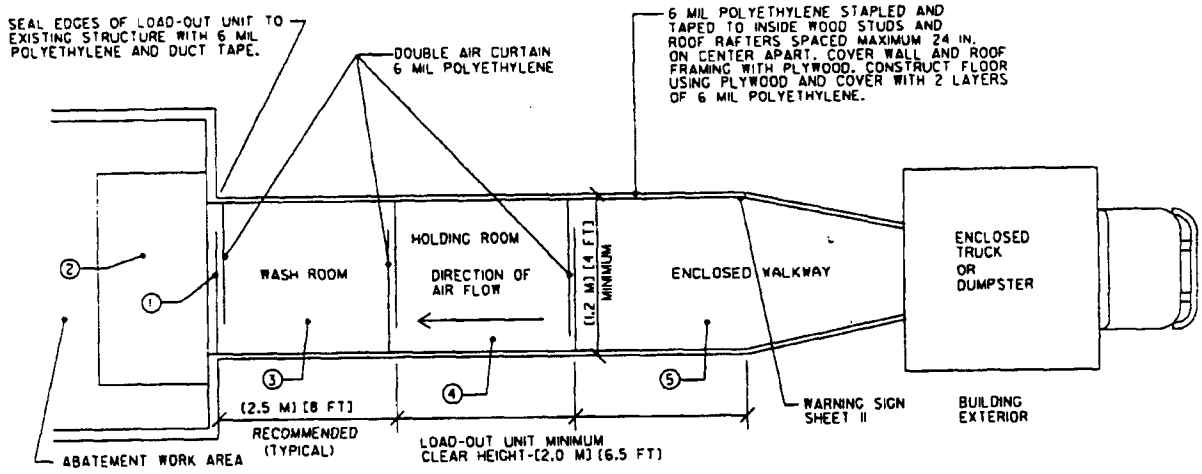

Load-out unit floor plan

1. Abatement worker is to enter and exit abatement work area only through decontamination unit.

2. Place additional 6-mil polyethylene sheeting on top of abatement area floor. Double bag asbestos-contaminated material in this area before removing.

3. Wet wipe bags, equipment, and containers, and take to holding room.

4. Stage clean bags, equipment, and containers in holding room until disposal worker removes them.

5. Disposal workers, wearing full protective clothing and appropriate respirator protection, carry decontaminated bags and containers through enclosed walkway and into enclosed truck or Dumpster.

Final clearance requirements. Before breaking down load-out unit, adequately wet clean and HEPA vacuum all surfaces and prepare area for final clearance. Contractor and Contracting Officer will certify visual inspection of work area on sheet 19, ***Certification of Final Cleaning and Visual Inspection.*** Contractor will apply lockdown encapsulant. Contract designee(s) will conduct final air-clearance monitoring as required by the contract. Breakdown load-out area upon instructions from Contracting Officer. Treat as asbestos- contaminated material. Place in approved container; see sheet 9. Apply labels; see sheet 14. Dispose of as required by the contract.

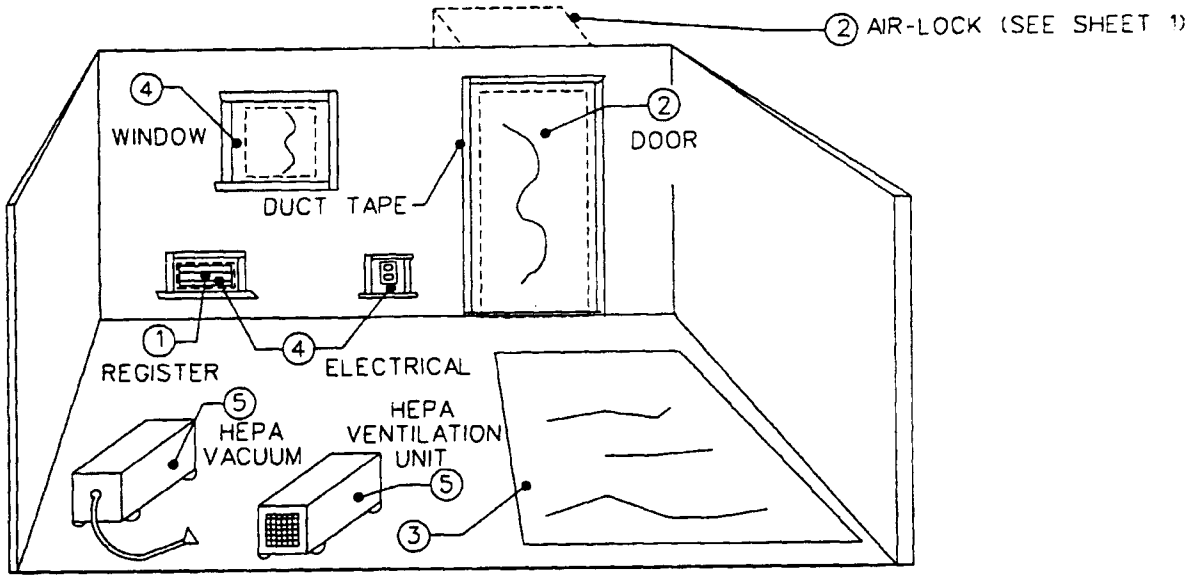

Modified containment area

1. Establish work area and prevent unauthorized entry; see sheet 11. Eliminate airflow into containment area by isolating all supply and return air ducts from mechanical system.

2. Install air lock at entrance to abatement area; see sheet 1. Air lock may be constructed either outside or inside of room. NOTE: Air lock is not required for glove bag operations.

3. Install 6-mil polyethylene sheet on floor under work area.

4. Install 6-mil polyethylene (critical barrier) over all windows, doors, wall openings, electrical outlets, etc. Provide airtight seal, using duct tape.

5. Provide a HEPA-filter vacuum cleaner and a HEPA-filter ventilation system in the work area; see sheet 8. The ventilation system does not have to be ducted to the outside of the structure. The ventilation system shall operate 24 hours a day from start of abatement through final air-clearance monitoring. The ventilation system shall be sized to recirculate the air a minimum of four air changes per hour. For glove bag operations, provide a single HEPA ventilation unit with a measured capture velocity at least 1,500 cfm.

6. Accumulate all loose material and polyethylene from floor. Place in approved container; see sheet 9. Apply labels; see sheet 14. HEPA vacuum and adequately wet clean all wall, floor, and equipment surfaces.

Final clearance requirements. Abatement worker must wear two disposable suits. Remove outer suit in the work area. Place suit in 6-mil disposal bag; see sheet 9. Enter air lock. In air lock, wet wipe respirator and wash hands with clean water from portable sprayer. Remove respirator and place in clean plastic bag. Proceed to remote shower where inner suit may be removed. Prepare work area and air lock for final clearance. Contractor and Contracting Officer will certify visual inspection of work area on sheet 19, *Certification of Final Cleaning and Visual Inspection*. Contract designee(s) will conduct final air-clearance monitoring as required by the contract. Upon instructions from the Contracting Officer, remove critical barriers and HEPA ventilation units; see sheet 8. Treat polyethylene as asbestos-contaminated material. Place in approved container; see sheet 9. Apply labels; see sheet 14. Dispose of as required by the contract.

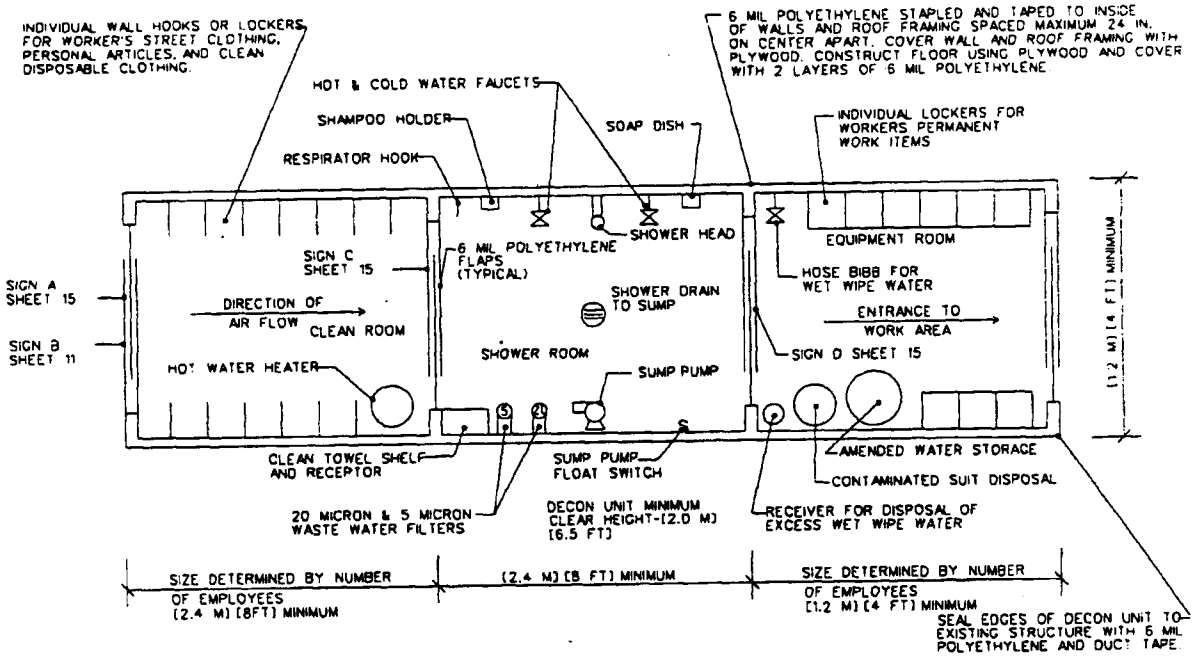

Decontamination unit floor plan

1. Establish work area so that unauthorized entry is prevented; see sheets 11 and 15. Before entering the work area, all personnel shall remove their street clothing in the clean room and put on protective clothing and respirator.

2. Whenever exiting the work area, all personnel shall:

- Vacuum clothing and shoes outside equipment room.
- Remove all clothing and equipment (except respirator) in equipment room.
- Store work shoes and equipment in locker.
- With respirator still on, shower thoroughly, including hair. Then remove respirator and finish shower.
- Proceed to clean room and put on street clothes.

3. See sheet 23 for minimum plumbing requirements, including wastewater filtration. Ensure that plumbing and specified filter size meet local requirements.

4. Twice daily, or more often if necessary, and before breaking down decontamination unit after abatement, adequately wet clean and HEPA vacuum all wall, floor, equipment, and other surfaces. Waste collected in shower room and equipment room shall be treated as asbestos-contaminated material. Place in approved container; see sheet 9. Apply labels; see sheet 14.

5. Prepare for final clearance.

Final clearance requirements. Contractor and Contracting Officer will certify visual inspection of work area on sheet 19, ***Certification of Final Cleaning and Visual Inspection.*** Contract designee(s) will conduct final air-clearance monitoring as required by the contract. If the unit is not a prefabricated decontamination unit, apply lockdown encapsulant before final air-clearance monitoring. After approval of final air clearance, break down and treat polyethylene as asbestos-contaminated material. Place in approved container; see sheet 9. Apply labels; see sheet 14. Dispose of as required by the contract.

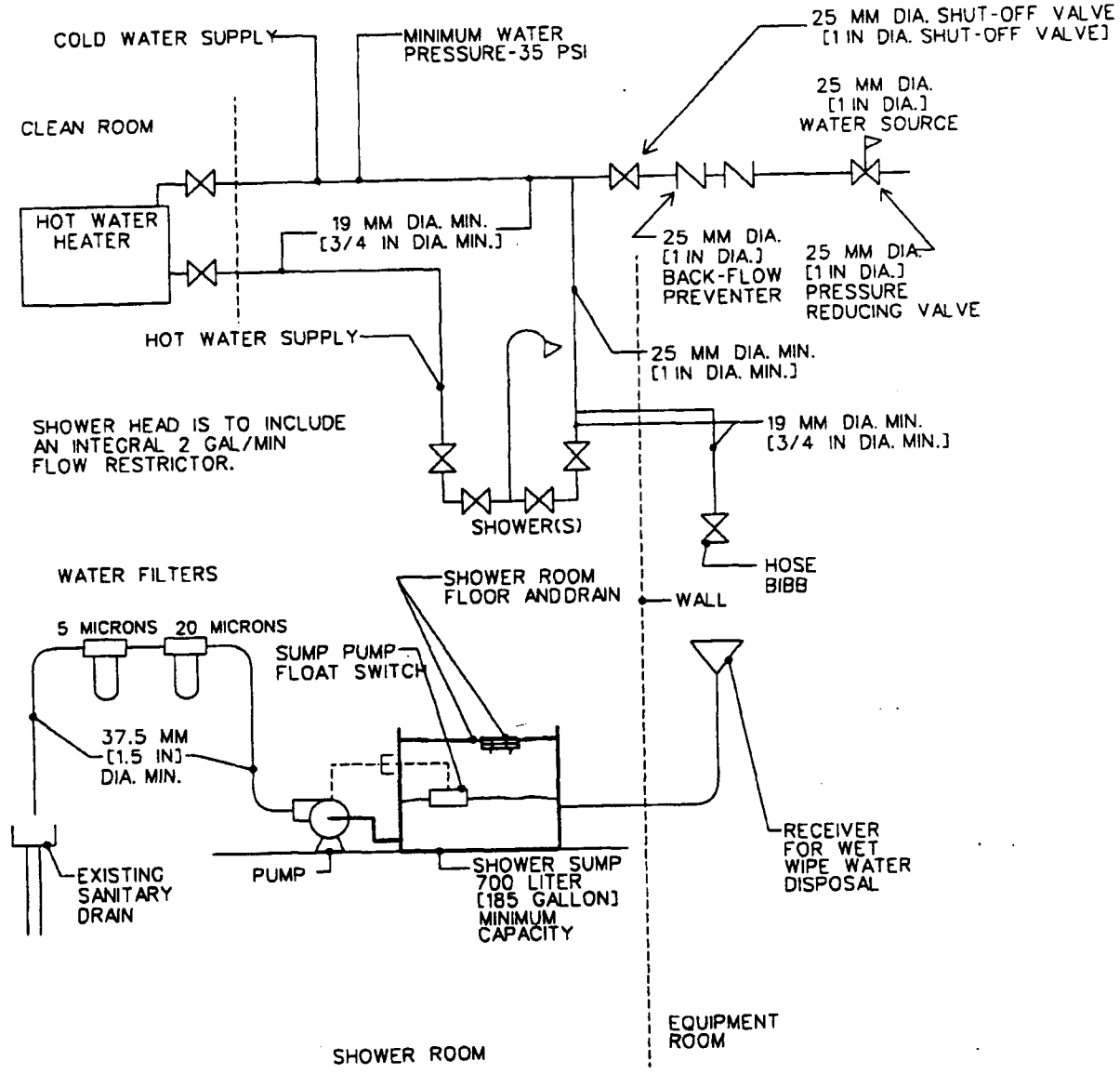

SIZE CAPACITY OF SUMP PUMP FOR TWICE THE EXPECTED WASTE WATER FLOW.

Decontamination unit piping details

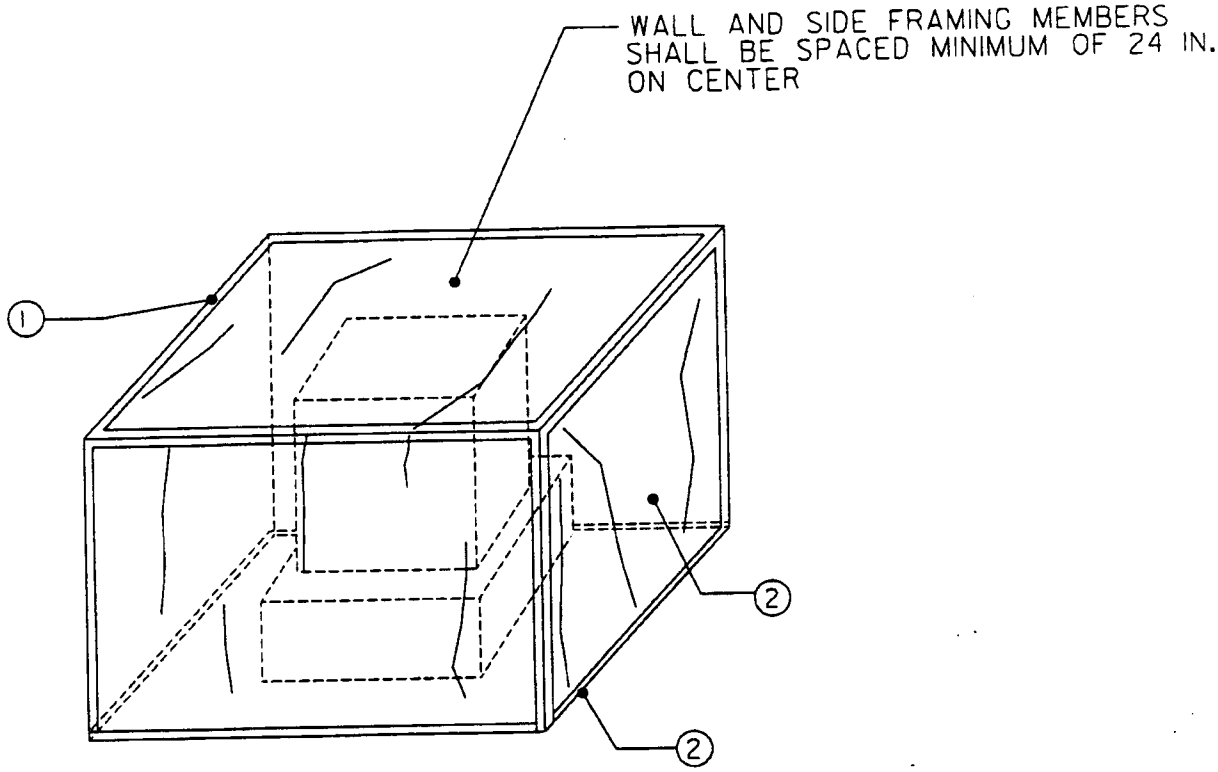

Temporary equipment enclosure

1. Construct wood frame of equipment enclosure; then cover all sides and the roof of frame with plywood.

2. Cover entire plywood equipment enclosure with 6-mil polyethylene. Seal seams and edges with duct tape, making the enclosure airtight and watertight.

Final clearance requirements. Upon completion of abatement work, remove temporary enclosure in accordance with the procedures listed on sheet 16, 17, or 18, and prepare for final clearance.

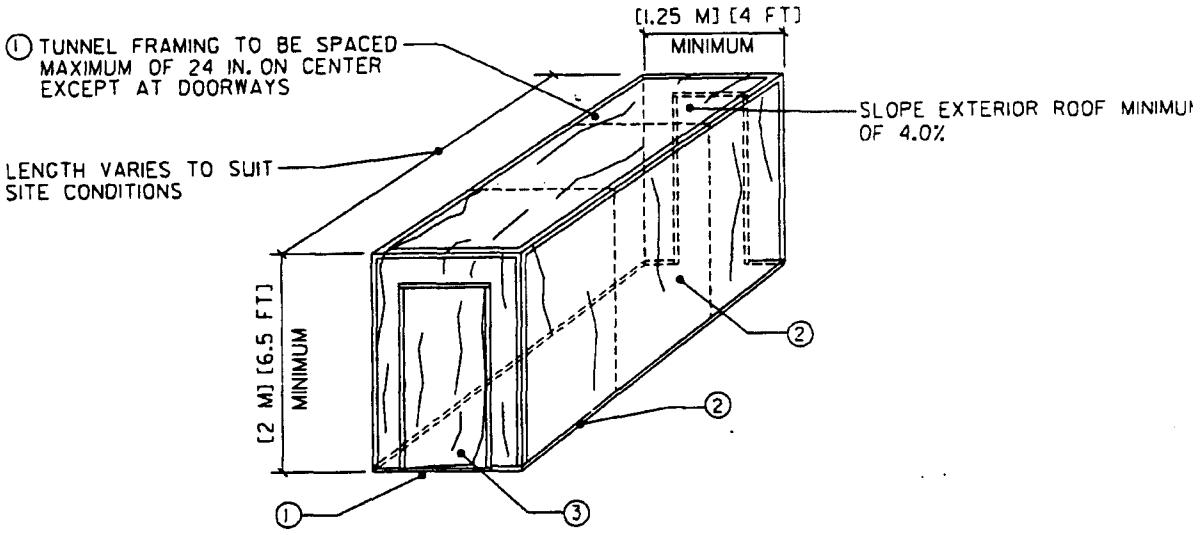

Access tunnel

1. Construct a wood frame tunnel; cover all sides and the roof of the frame with polyethylene. NOTE: Cover all sides and roof with plywood or reinforced polyethylene if access tunnel is located outside.

2. Cover entire tunnel with 6-mil polyethylene; seal seams and edges with duct tape, making the tunnel airtight and watertight.

3. Twice daily, or more frequently if necessary, adequately wet clean and HEPA vacuum all wall, floor, and equipment surfaces.

Final Clearance Requirements. Upon completion of abatement work, remove access tunnel in accordance with the procedures listed on sheet 16, 17, or 18, and prepare for final clearance.

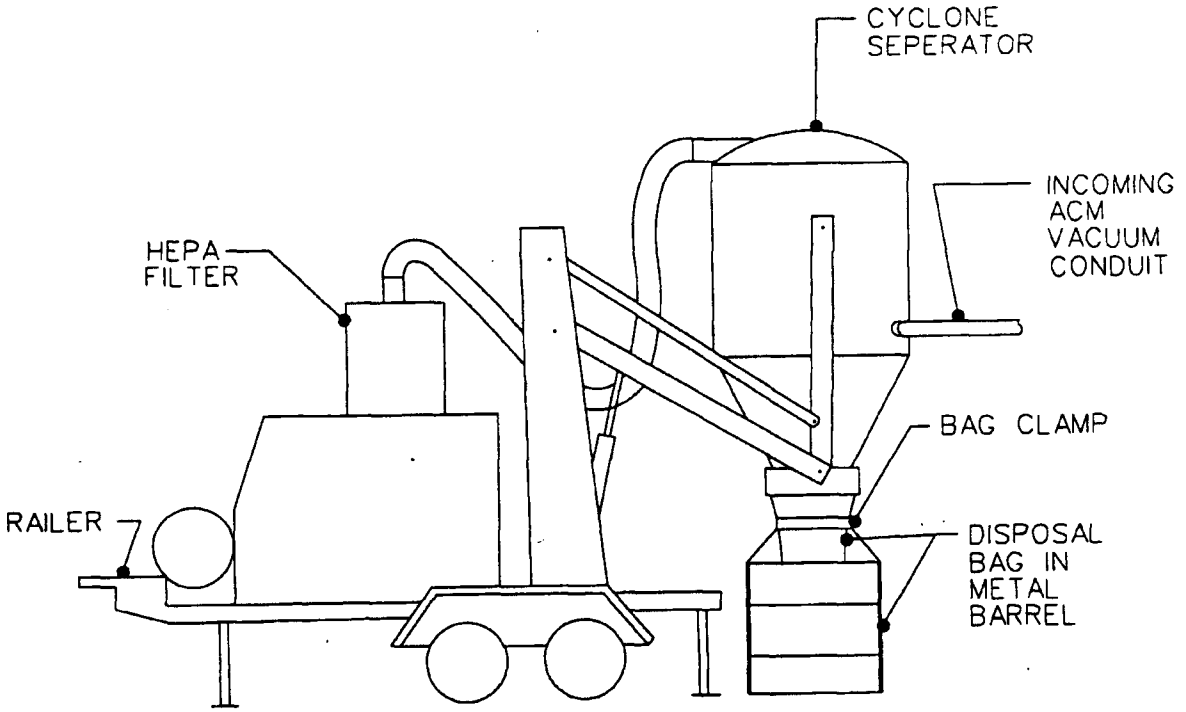

Asbestos power vacuum collection and removal system

An asbestos power vacuum collection and removal system is a completely self-contained, material-handling system used to transport large volumes of asbestos-containing material through a large-diameter vacuum conduit to a trailer or truck-mounted collector. The cyclone is designed to separate the wet asbestos-contaminated material from the air stream and enable easy transfer to disposal containers. Asbestos-contaminated air is HEPA filtered before being discharged into the atmosphere. The contractor shall follow manufacturer-recommended operating and maintenance procedures in order to protect workers and environment.

Cleaning and storage

Abatement Area	Furnishings										Equipment		Codes		Specific Storage Location
Designation, location, identification	Item: desks, tables, chairs	Quantity	Item: file cabinets	Quantity	Item: shelving	Total linear square feet	Item: books, papers, files	Quantity	Item: other	Quantity	Fixed	Removable	Cleaning	Storage	Bldg., room, address

Storage*	**Code**
In place and protected by a sealed polyethylene cover	1
In same building, moved on same floor	2
In same building, moved to another floor	3
In different building on installation nearby (< 1 mile)	4
In different building on installation (1 > to 10 miles)	5
Off Installation	6
Dispose of as nonasbestos-contaminated material	7
Dispose of as asbestos-contaminated material	8
Cleaning	**Code**
Wet wipe	9
HEPA vacuum	10
Steam clean	11
Launder	12

*Specific storage location shall be confirmed with Contracting Officer before removal.

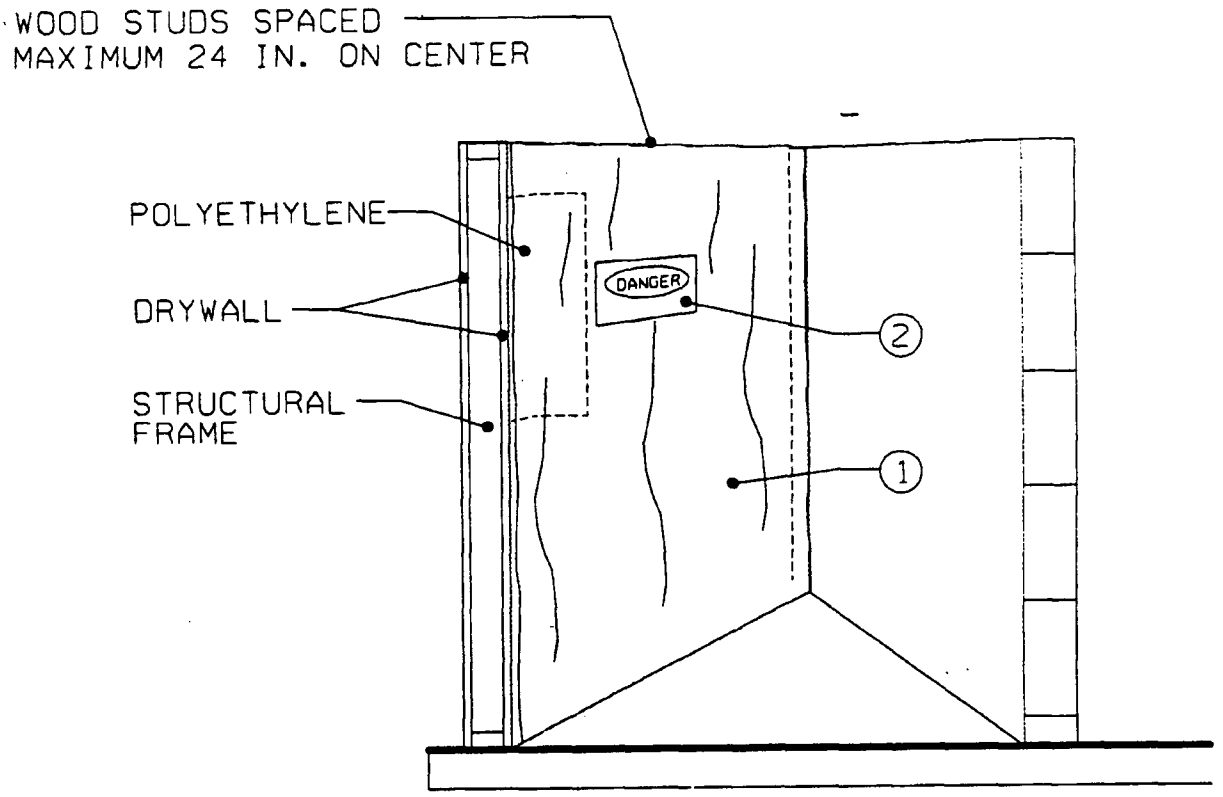

Structural critical barrier

1. The purpose of this critical barrier is to isolate the containment area from the remainder of the building. The barrier shall consist of fire-rated drywall mounted on both sides of a structural frame, with the face of the containment area covered by a 6-mil polyethylene sheet. Seal the edges of the polyethylene sheet to walls, ceiling, and floor with duct tape. Secure structural frame to adjacent walls as necessary for stability.

2. Install danger signs on side away from containment area. See sheet 11.

3. After final air-clearance monitoring and upon instructions from contracting officer, remove critical barrier and treat polyethylene sheet as asbestos-contaminated material; see sheets 9 and 14. If framing and drywall are asbestos-contaminated, treat as asbestos-contaminated material; see sheets 9 and 14.

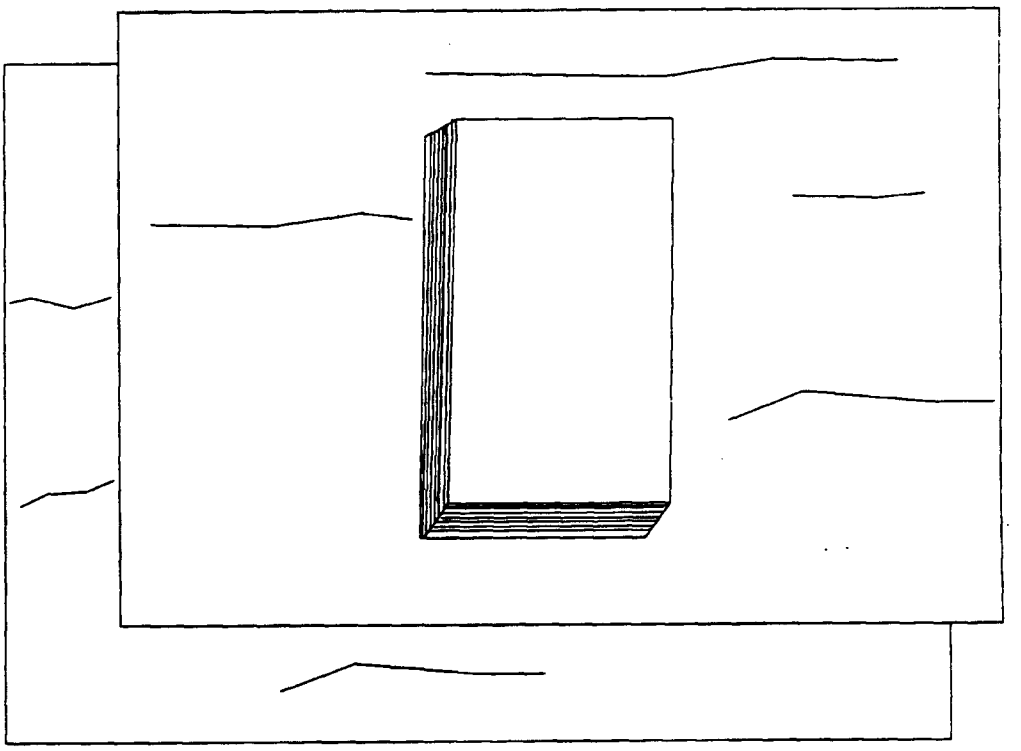

Removal of asbestos cement architectural products

1. Prepare modified containment area as specified on sheet 21.

2. Adequately mist a removal encapsulant on the top surface of the product. Remove product. HEPA vacuum and wet wipe surface area. Spread two layers of 6-mil polyethylene on floor beside the product. Wrap top layer of polyethylene around the product. Seal all joints and ends with duct tape; see sheet 9B. Apply labels; see sheet 14. Wrap again with second layer of polyethylene in the same manner; see sheet 9B. Apply labels; see sheet 14.

3. Prepare area for final clearance.

4. Carry out final clearance requirements as specified on sheet 21.

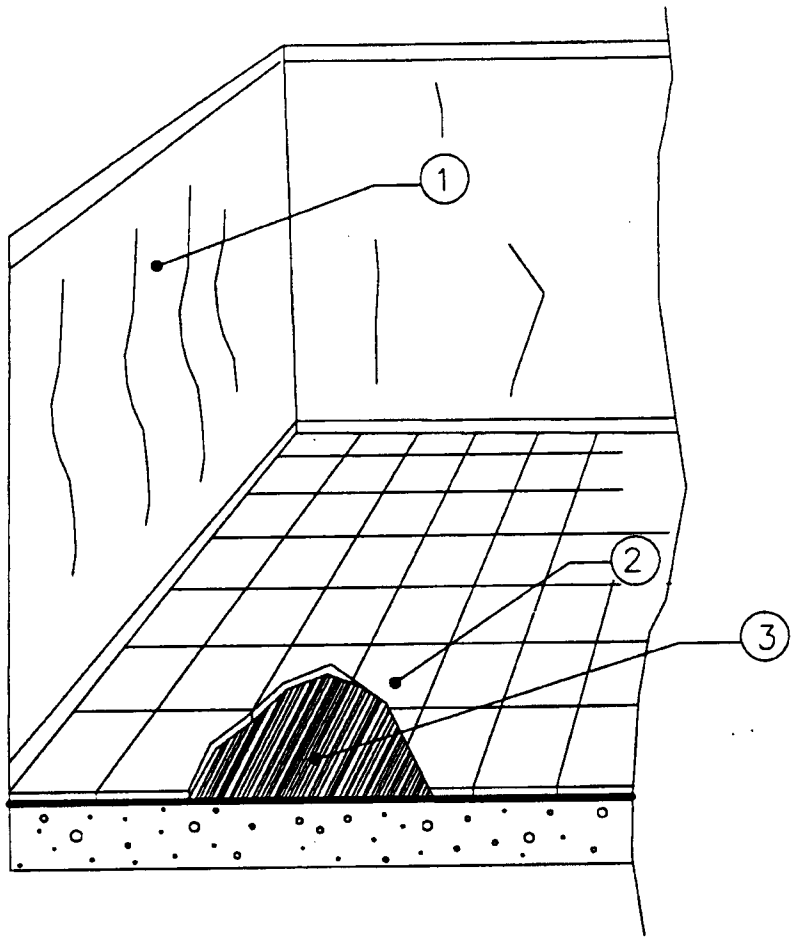

Removal of vinyl asbestos tile adhered to concrete floor system by asbestos-containing adhesive

1. Prepare containment area as specified on sheet 21. NOTE: Where full containment area is required, follow instructions on sheet 4, except omit polyethylene on floor.

2. Lightly flood asbestos tile with amended water, and let soak for 48 hours. Remove asbestos tile and adhesive while they are wet in order to prevent asbestos fiber release. Place tile and adhesive into an approved container; see sheet 9. Apply labels; see sheet 14.

3. Clean, HEPA vacuum, and wet wipe all surfaces.

4. Inspect and reclean area as necessary.

5. Prepare area for final air clearance.

6. Carry out final clearance requirements as specified on applicable sheet 18 or 21.

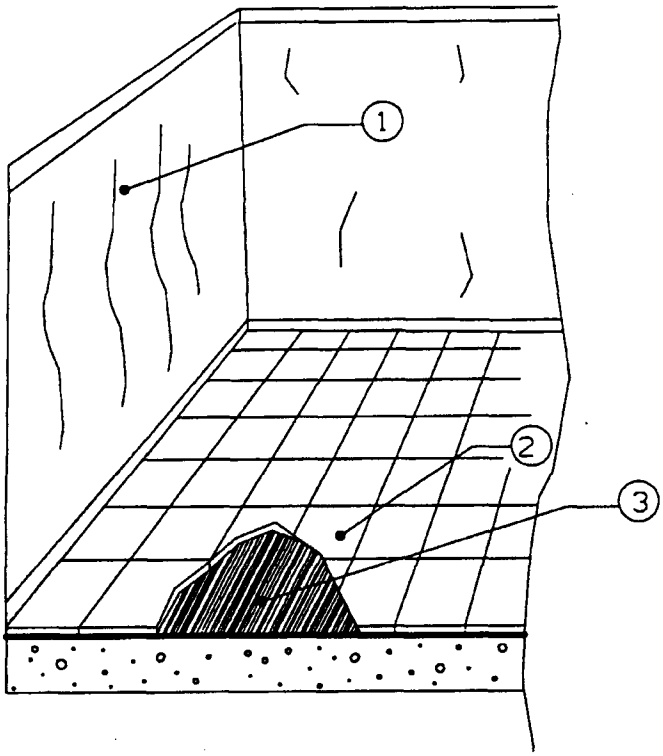

USE THIS DETAIL ONLY FOR
- SMALL SCALE PROJECTS
- GROUND FLOOR APPLICATIONS

Removal of vinyl asbestos tile and chemical dissolution of asbestos-containing adhesives on concrete floor system

1. Prepare containment area as specified on sheet 4.

2. Lightly flood asbestos tile, and soak for 48 hours. Remove asbestos tile and adhesive while they are wet in order to prevent asbestos fiber release. Place tile and adhesive into an approved container; see sheet 9. Apply labels; see sheet 14.

3. Before removing adhesive, increase ventilation rate to 10 air changes per hour. Air must be exhausted outside building.

4. Apply liquid adhesive remover. As soon as the adhesive is soft enough to scrape, remove and put into approved container; see sheet 9. Apply labels; see sheet 14.

5. Prepare area for final air clearance.

6. Carry out final clearance requirements as specified on sheet 18.

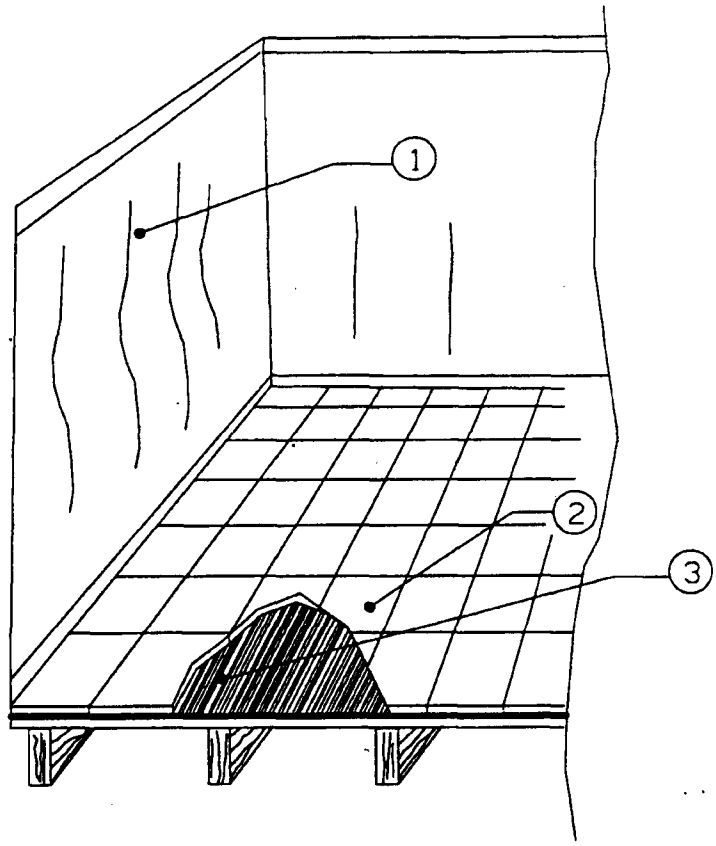

Removal of vinyl asbestos tile adhered to wood floor system by asbestos-containing adhesive

1. Prepare containment area as specified on sheet 21, except omit polyethylene on floor. NOTE: Where full containment is required, follow instructions on sheet 4.

2. Where wood flooring is to remain, adequately wet and remove asbestos tile and adhesive in order to prevent asbestos fiber release. Place tile and adhesive into an approved container; see sheet 9. Apply labels; see sheet 14. Note: Where wood flooring is to be removed, adequately wet and remove existing wood flooring. Treat as asbestos-contaminated material. Spread a plastic sheet on the floor, and stack removed wood flooring onto two layers of 6-mil polyethylene. Wrap each polyethylene layer around the stack, sealing all joints and edges with duct tape; see sheet 9. Apply labels to stack; see sheet 14. Smaller material will be placed in approved container; see sheet 9. Apply labels; see sheet 14.

3. Clean, HEPA vacuum, and adequately wet clean all surfaces.

4. Inspect and reclean area as necessary.

5. Prepare area for final air clearance.

6. Carry out final clearance requirements specified in applicable sheet 18 or 21.

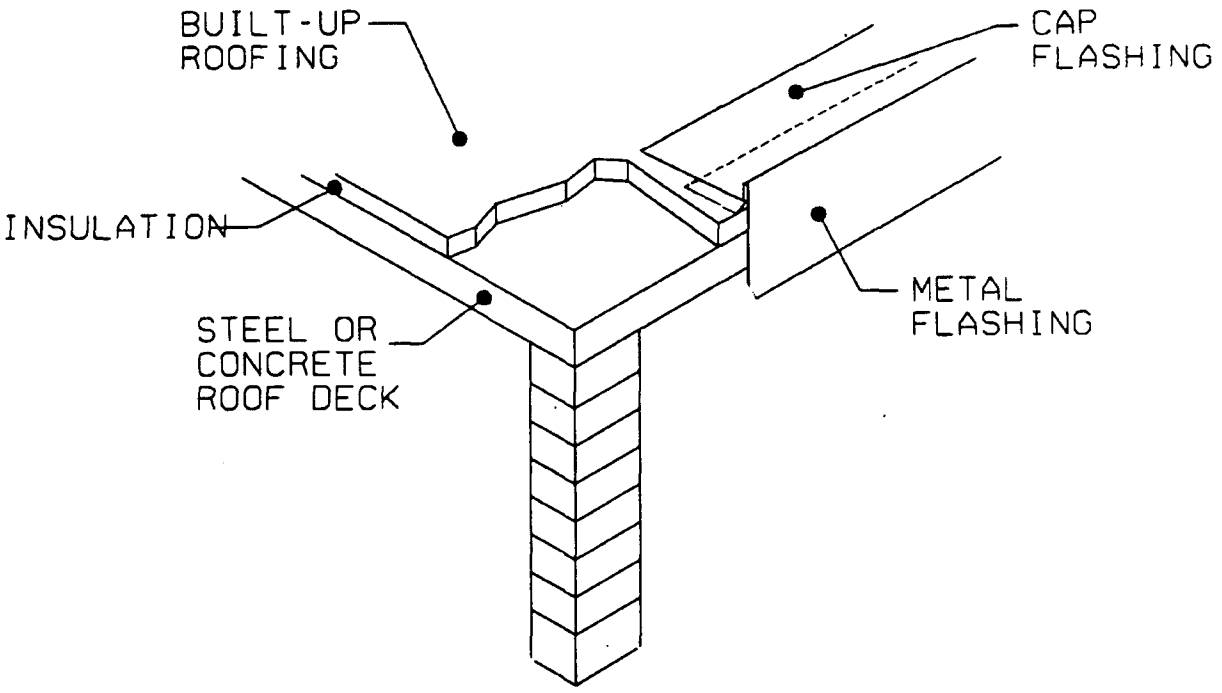

Removal of built-up roofing and flashing

1. No containment area is required. Establish boundaries of asbestos-regulated work area so that unauthorized entry is prevented; see sheet 11. Provide personal protection and decontamination facilities as specified in contractor's asbestos hazard abatement plan.

2. Remove accumulated debris.

3. Adequately wet mist flashing and built-up roofing, initially and during removal procedures. Remove flashing and built-up roofing.

4. Dispose of all materials by carefully sliding them down an enclosed chute into an enclosed Dumpster or truck that is lined with two layers of 6-mil polyethylene. When the Dumpster or truck is filled, fold the polyethylene edges over each other and seal with duct tape; see sheet 9 for leak-tight wrapping. Apply labels; see sheet 14.

5. Clean and HEPA vacuum roof.

6. Inspect and reclean area as necessary.

7. Apply tinted penetrating encapsulant to exposed roof deck, using an airless sprayer. Inspect and reapply encapsulant as necessary.

8. Prepare area for final clearance.

9. Contractor and contracting officer will certify visual inspection of work area on sheet 19, *Certification of Final Cleaning and Visual Inspection.*

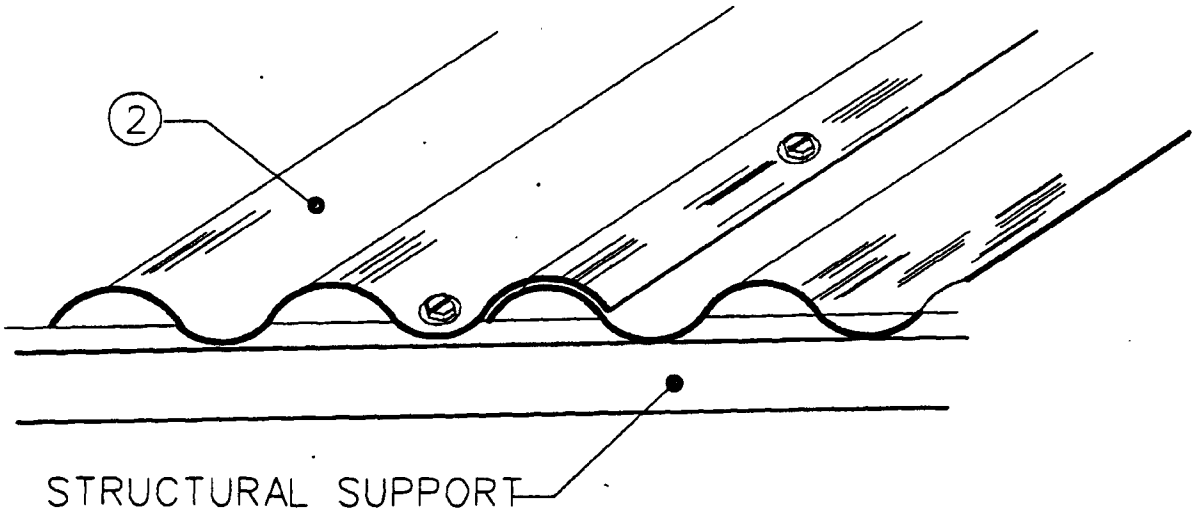

Removal of asbestos cement roofing

1. No containment area is required. Establish boundaries of asbestos-regulated work area so that unauthorized entry is prevented; see sheet 11. Provide personal protection and decontamination facilities as specified in contractor's asbestos hazard abatement plan.

2. Wet mist the top surface of the roofing with ammended water, initially and during removal procedures. Carefully remove roofing in a manner that will prevent crumbling, pulverizing, or reducing to powder during the removal procedure. NOTE: Normal breakage does not constitute crumbling, pulverizing, or reducing to powder.

3. Place all materials in Dumpster or other transport container lined with two layers of 6-mil polyethylene. Seal the joints and ends of each layer with duct tape; see sheet 9. Apply labels; see sheet 14. Other containers may be used; see sheet 9. Apply labels; see sheet 14.

4. Prepare area for final clearance.

5. Contractor and contracting officer will certify visual inspection of work area on sheet 19, *Certification of Final Cleaning and Visual Inspection*.

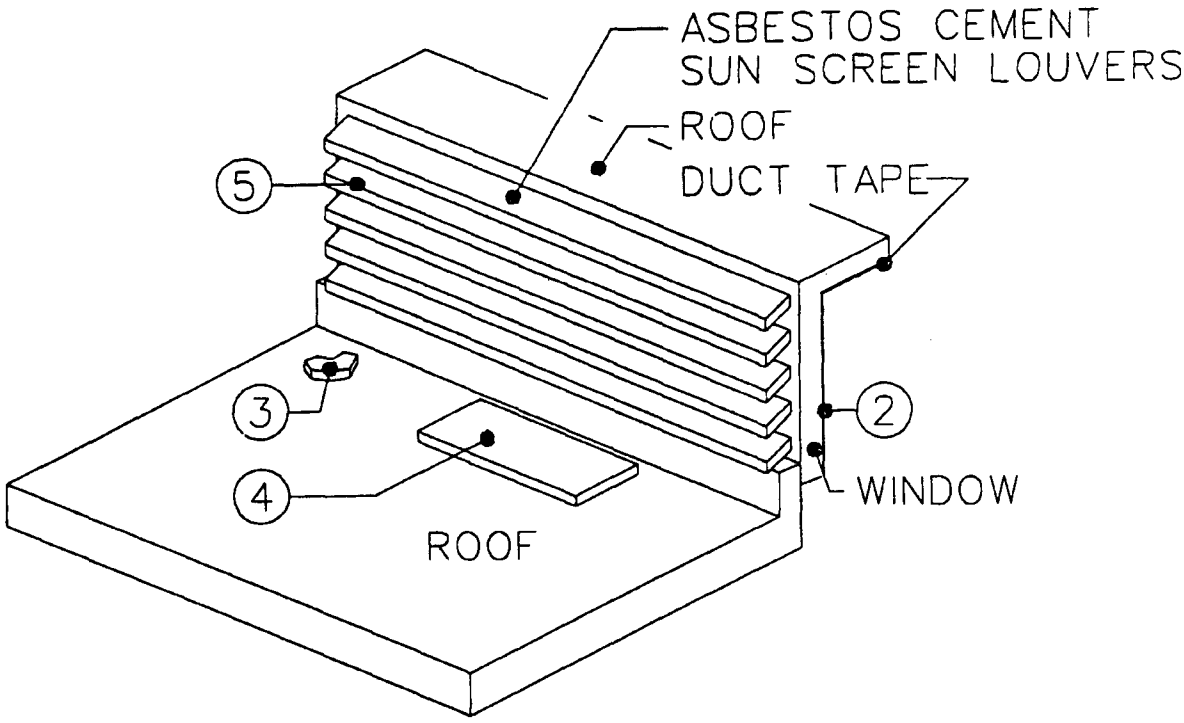

Removal of asbestos cement sunscreen louvers

1. No enclosed containment area is required. Establish boundaries of asbestos regulated work so that unauthorized entry is prevented; see sheet 11. Provide personal protection and decontamination facilities as specified in contractor's asbestos hazard abatement plan.

2. Install 6-mil polyethylene critical barrier over inside face of window and frame. Seal with duct tape. Anchor 10-mil polyethylene sheeting below work area.

3. Clean up roof debris from broken asbestos cement sunscreen louvers. Treat as asbestos-containing material. Place debris in approved containers; see sheet 9. Apply labels; see sheet 14.

4. Place [0.8-in] [20-mm] plywood sheets on roof or scaffolding adjacent to work area.

5. Adequately mist a removal encapsulant on all accessible louver surfaces, initially and during removal procedures. Gently remove each louver slat by disconnecting from supporting metal straps. If breakage occurs, place in approved containers per step 3 above. If slats can be removed intact, stack and wrap with two layers of 6-mil polyethylene. Seal the joints and ends with duct tape; see sheet 9. Apply labels; see sheet 14.

6. Mist the supporting straps with a removal encapsulant and remove. Treat as asbestos-contaminated waste. Dispose of per step 3 above.

7. HEPA vacuum roof, windows, jambs, and all adjacent surfaces as each work area is completed.

8. Prepare area for final clearance.

9. Contractor and contracting officer will certify visual inspection of work area on sheet 19, *Certification of Final Cleaning and Visual Inspection.*

10. Upon instructions from the contracting officer, remove all critical barriers and plywood. Treat as asbestos-contaminated waste per step 3 above.

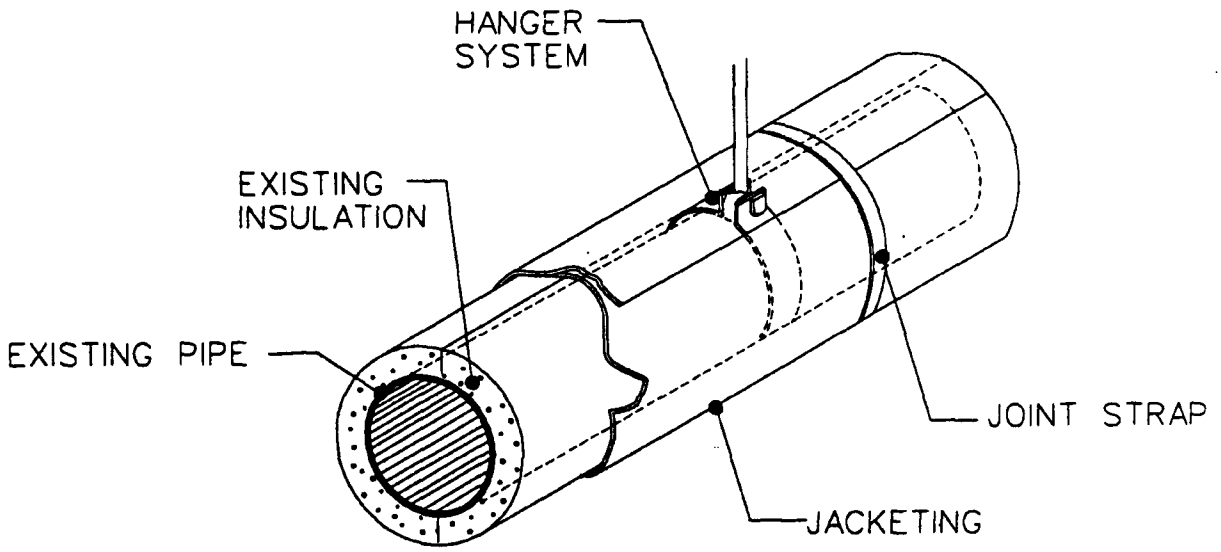

NOTE: THIS SHEET CAN BE USED FOR VERTICAL OR HORIZONTAL PIPING.

Removal of pipe insulation (using glove bag)

1. Install glove bag as specified on sheet 10. Prepare modified containment area as specified on sheet 21. Adequately wet mist insulation surface with amended water, initially and during removal.

2. Remove jacketing and asbestos pipe insulation from pipe and hanger to within 2 inches of inside edges of glove bag.

3. Clean exposed surfaces by spraying with amended water and brushing.

4. Inspect and reclean as necessary.

5. Spray a tinted penetrating encapsulant on pipe and exposed ends of insulation.

6. Inspect piping and reapply encapsulant as necessary.

7. Prepare area for final air clearance.

8. Carry out final clearance requirements specified on sheets 10 and 21.

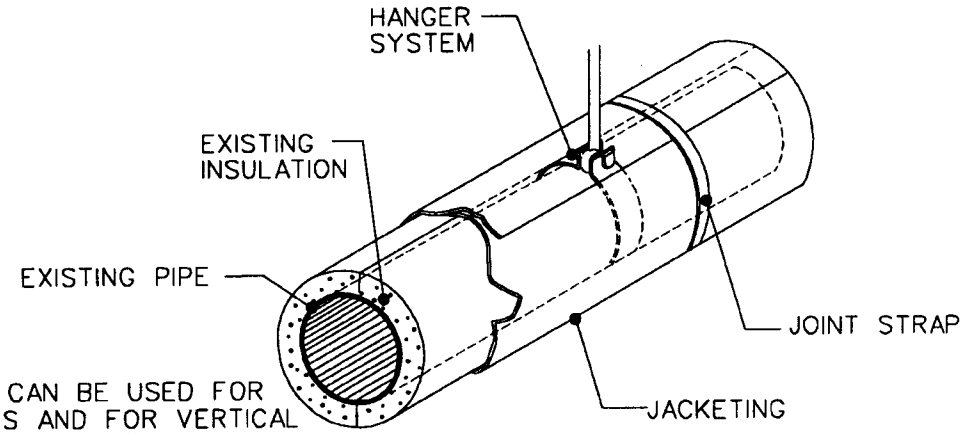

NOTE: THIS SHEET CAN BE USED FOR PIPE FITTINGS AND FOR VERTICAL OR HORIZONTAL PIPING.

Removal of horizontal pipe insulation (using containment area)

1. Prepare containment area as specified on applicable sheet 2, 3, or 4.

2. Adequately wet mist insulation surface with amended water, initially and during removal. Remove jacketing and insulation from pipe and hanger system.

3. Clean exposed surfaces by spraying with amended water and brushing.

4. Inspect and reclean as necessary.

5. Spray a tinted penetrating encapsulant on pipe and exposed ends of insulation.

6. Inspect piping and reapply encapsulant as necessary.

7. Prepare area for final air clearance.

8. Carry out final clearance requirements specified on applicable sheet 16, 17, or 18.

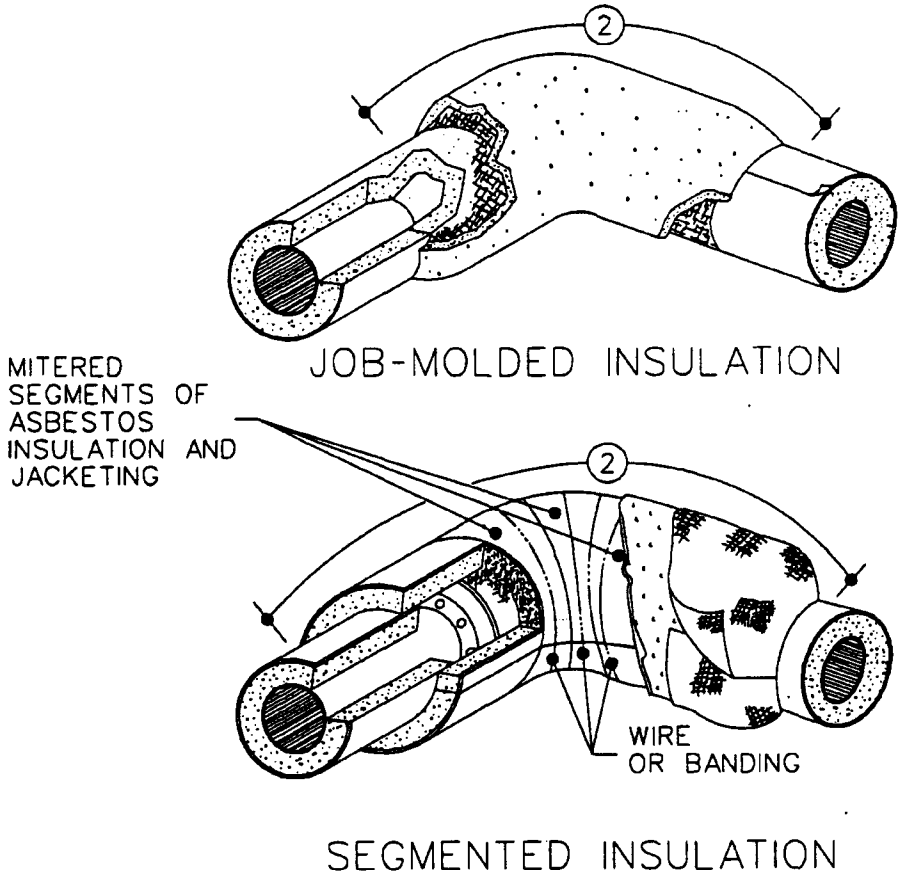

Removal of pipe-fitting insulation (using glove bag)

1. Install glove bag as specified on sheet 10. Prepare modified containment area as specified on sheet 21.

2. Adequately wet mist with amended water, initially and during removal procedure. Remove jacketing and asbestos-containing insulation from fittings and onto straight run of pipe until only asbestos-free insulation remains.

3. Clean exposed surfaces by spraying with amended water and brushing. HEPA vacuum and wet wipe all surfaces.

4. Inspect and reclean area as necessary.

5. Spray a tinted penetrating encapsulant on pipe and exposed ends of insulation.

6. Inspect and reapply penetrating encapsulant as necessary.

7. Prepare area for final air clearance.

8. Carry out final clearance requirements as specified on sheets 10 and 21.

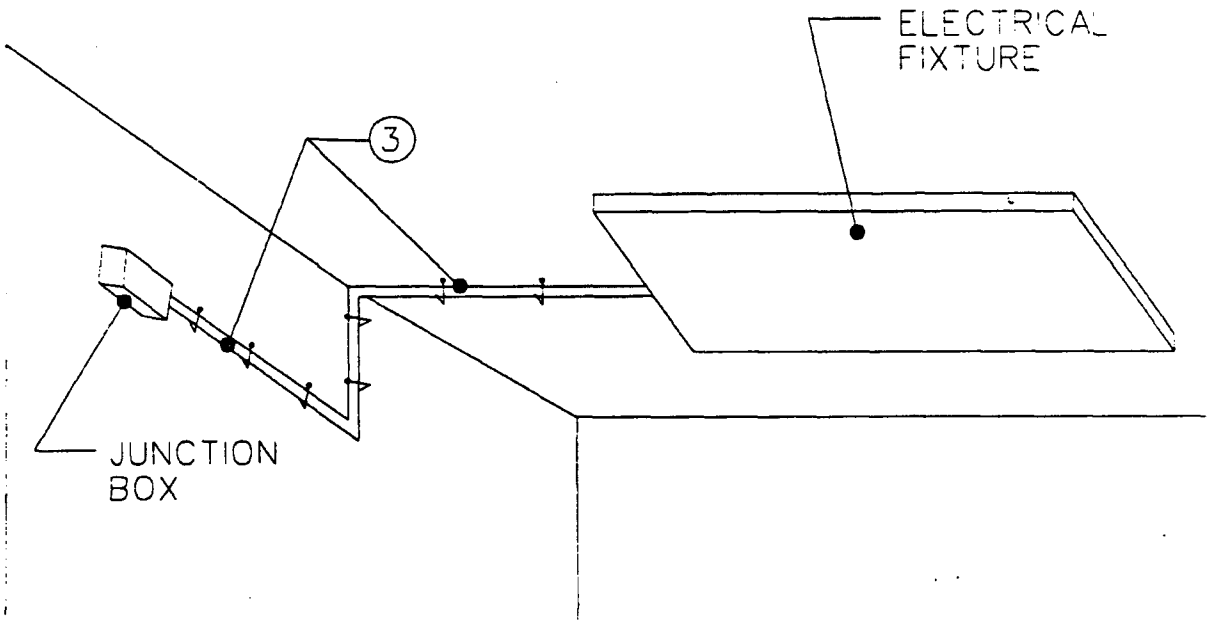

Removal of asbestos-insulated electrical wiring

1. Prepare modified containment area as specified on sheet 21.

2. Disconnect all electrical power to the area where electrical wiring is to be removed.

3. Adequately wet mist exposed asbestos insulation with removal encapsulant. Carefully remove wiring so as not to damage insulation. Coil wire and place in approved container; see sheet 9. Apply labels; see sheet 14.

4. Prepare area for final clearance.

5. Carry out final clearance requirements specified on sheet 21.

SECTION 02090

LEAD-BASED PAINT (LBP) ABATEMENT AND DISPOSAL

PART 1 GENERAL

1.1 REFERENCES

The publications listed below form a part of this specification to the extent referenced. The publications are referred to in the text by basic designation only.

CODE OF FEDERAL REGULATIONS (CFR)

29 CFR 1910	Occupational Safety and Health Standards
29 CFR 1926	Safety and Health Regulations for Construction
40 CFR 148	Hazardous Waste Injection Restrictions
40 CFR 260	Hazardous Waste Management System: General
40 CFR 261	Identification and Listing of Hazardous Waste
40 CFR 262	Standards Applicable to Generators of Hazardous Waste
40 CFR 263	Standards Applicable to Transporters of Hazardous Waste
40 CFR 264	Standards for Owners and Operators of Hazardous Waste Treatment, Storage, and Disposal Facilities
40 CFR 265	Interim Status Standards for Owners and Operators of Hazardous Waste Treatment, Storage, and Disposal Facilities
40 CFR 268	Land Disposal Restrictions
49 CFR 172	Hazardous Materials Table, Special Provisions, Hazardous Materials Communications, Emergency Response Information, and Training Requirements

DEPARTMENT OF HOUSING AND URBAN DEVELOPMENT (HUD)

HUD-01	(1996) Lead-Based Paint: Guidelines for the Availability and Control of Lead-Based

Paint Hazards in Housing

ENGINEERING MANUALS (EM)

EM 385-1-1	(1996) U.S. Army Corps of Engineers Safety and Health Requirements Manual

NATIONAL FIRE PROTECTION ASSOCIATION (NFPA)

NFPA 701	(1996) Methods of Fire Test for Flame-Resistant Textiles and Films

NATIONAL INSTITUTE FOR OCCUPATIONAL SAFETY AND HEALTH (NIOSH)

NIOSH OSHA Booklet 3142	Lead in Construction

UNDERWRITERS LABORATORIES (UL)

UL 586	(1996) High-Efficiency, Particulate, Air Filter Units

1.2 SUBMITTALS

Government approval is required for submittals with a "GA" designation; submittals having an "FIO" designation are for information only. Unless otherwise indicated below, primary reviewer for these submittals will be the Hazardous Materials Consultant. The following shall be submitted in accordance with Section 01330 SUBMITTAL PROCEDURES:

SD-01 Data

Equipment List; GA.

A list of equipment items to be used in the work, including brand names, model, capacity, performance characteristics, quantities and other pertinent information.

SD-08 Statements

Accident Prevention Plan (APP); GA.

An Appendix to the APP required under Section 01420 SAFETY relating to the issues discussed in the Section.

Acitivity Hazard Analysis (AHA); GA.

An Appendix to the AHA required under Section 01420 SAFETY relating to the issues discussed in the Section.

Licenses, Permits and Notifications; GA.

Copies of all required and applicable Federal, New York State, and local licenses and permits.

Lead-Based Paint (LBP) Inventory; GA.

Diagnostic Environmental Inc. (1993) has conducted a space-by-space lead-based paint determination within the Arvin Cadet Physical Development Center. A written inventory has been prepared that identifies the LBP containing surfaces, and has been included as an Appendix to this Project Manual (Lead Survey - Arvin gymnasium 1993). The inventory will be the basis of the LBP Management Plan. All surfaces, including structural steel is to be assumed to be coated with, at a minimum, LBP in excess of 10% total lead.

Lead-Based Paint (LBP) Management Plan; GA.

The Contractor shall review the specified abatement work tasks and abatement methods and shall prepare a detailed LBP Management Plan that identifies the work procedures, health, and safety measures to be used in LBP abatement. The plan shall address the various sources of lead and the methods to be undertaken to abate the lead hazards to include the following key elements:

a. Location cuts to be performed on LBP containing components keyed to project drawings.

b. Abatement methods for each cut to be performed on a LBP containing component and structural steel.

c. Means for notifying occupants of proposed work schedules.

d. Training requirements as required by Federal, New York State, and local regulations.

e. Unique problems associated with the LBP abatement locations for this project.

f. A generic sketch of LBP control areas and decontamination areas to be set-up at each location of LBP abatement.

g. Eating, drinking, smoking, and rest room procedures.

h. Sequencing of LBP related abatement work.

i. Personnel protective equipment; respiratory protection program and controls.

j. Engineering controls, containment structures and safety measures.

k. Worker exposure assessment procedures.

l. Work Practice controls.

m. Housekeeping.

n. Hygiene facilities and practice.

o. Medical surveillance, including medical removal protection.

p. Sampling, testing and analytical methods to include personal air sampling requirements of 29 CFR 1926 Section .62 and when specified or where required, environmental air sampling, dust wipe sampling (preabatement, during abatement, post abatement), soil sampling (preabatement, post abatement, final clearance), toxicity characteristic leaching procedure (TCLP) of the waste material in accordance with 40 CFR 261. Procedures must include frequency, locations, and sampling and analytical methods to be used.

Emergency Contingency Plan; GA. This submittal will be reviewed by the Contracting Officer.

An emergency contingency plan shall be prepared in accordance with 40 CFR 261. Procedure must address the following LBP abatement hazards as appropriate to the project:

a. Negative air pressure system failure.

b. Major breech of containment barriers.

c. Detection of unexpected lead levels on adjacent grounds.

d. Spilling of lead debris bags or containers.

e. Mapped out routes to the nearest medical treatment centers.

f. Phone numbers for project manager, local fire, police and medical personnel.

Hazardous Waste Management Plan; GA.

A Hazardous Waste Management Plan shall be prepared that complies with applicable requirements of Federal, New York State, and local hazardous waste regulations and addresses:

a. Identification or documentation of potential hazardous wastes associated with the lead-based paint abatement work.

b. Estimated quantities of wastes to be generated and disposed of.

c. Names and qualifications of each Contractor that will be transporting, storing, treating, and disposing of the wastes; the facility location, phone number, and name of a 24-hour point of contact shall be included. Two copies of EPA, New York State, and local hazardous waste permit applications, permits, and EPA identification numbers.

d. Names and qualifications (experience and training) of personnel who will be working onsite with hazardous waste.

e. List of waste handling equipment to be used in performing the work to include cleaning, volume reduction, and transport equipment.

f. Spill prevention, containment, and clean-up contingency measures to be implemented.

g. Work plan and schedule for waste containment, removal, and disposal. Waste shall be cleaned up and containerized daily.

h. Cost for hazardous waste disposal according to this plan.

The Hazardous Waste Management Plan shall include procedures for notifying with the Solid Waste Management Branch before accumulating hazardous waste and coordinating transportation of hazardous waste with the Solid Waste Management Branch

Waste Handling and Site Storage Plan; GA.

A Handling and Site Storage Plan shall be prepared that addresses the handling and storage of LBP debris in accordance with the requirement of 40 CFR 262 and 40 CFR 265. The Contractor shall confirm that an EPA identification number has been obtained so that proper manifesting of the waste will be addressed, and that site storage limitations, including the time of storage, container requirements, contingency plan, and personnel training have been complied with.

Waste Disposal Plan; GA.

A Waste Disposal Plan shall be prepared that will include but not be limited to the following:

a. A written confirmation that the debris will be treated and disposed of in accordance with the requirements of 40 CFR 260, 40 CFR 261, 40 CFR 262, 40 CFR 264 and 40 CFR 268.

b. A written confirmation that transportation of the debris will be in accordance with 40 CFR 263.

c. Waste subcontractor's name, address, telephone number, and landfill location, including copies of licenses and signed agreements.

d. Landfill or facility name, address, and telephone number. A copy of the landfill's state and locally issued license, and a signed agreement that the landfill will accept the LBP wastes.

e. Detailed delivery tickets prepared, signed, and dated by an agent of the landfill, certifying the amount of LBP containing materials delivered to the landfill, within 3 days after delivery.

SD-09 Reports

Sampling Result; GA.

A daily log of the personal air sampling test results shall be reviewed by the Contractor's Industrial Hygienist (IH) and submitted, in written form,

no more than 48 hours after completion of the sampling cycle. The log shall list each sample result, sampling time and date, sample type, identification of personnel monitored, flow rate and duration, air volume sampled, yield of lead, cassette size, analytical method used, analyst's name and company, and interpretation of results. Results shall be reported in micrograms of lead per cubic meter of air. In addition, the daily log shall include the results of dust wipe samples, soil samples and TCLP sampling including each phase of preabatement, during abatement and final clearance. Documentation of results that exceed specified limits (personal air samples that exceed 30 micrograms per cubic meter) or as required by Federal, New York State or local requirements shall be highlighted in the log in such a manner to make them easily distinguishable from monitoring results that do not exceed specified or regulatory limits. Refer to Section 01351 for additional requirements.

SD-13 Certificates

Quality Control; FIO. This submittal will be revieweed by the Contracting Officer.

Certificates shall meet the requirements of paragraph QUALITY CONTROL. The statements shall be signed and dated by a certifying officer after the award of this contract and contain the following:

a. Contractor's name and address.

b. Project name and location.

c. The specified requirements that are being certified.

1.3 DESCRIPTION OF WORK

The project consists of the demolition of selective portions of the existing Arvin Cadet Physical Development Center (Arvin CPDC), also known as building 727, sitework, utilities, abatement of friable asbestos containing materials, selective abatement of lead based and lead containing paints to permit demolition, removal of PCB containing ballasts, and removal of mercury containing lamps. Demolition and removal of the existing portions of the Arvin CPDC shall include the demolition and removal of the existing construction with non-friable asbestos containing materials in place, lead containing and lead based paints in place. All building debris resulting from the demolition and removal shall be tested, transported, and disposed of in accordance with the requirements of Section 02220 DEMOLITION.

All coatings found on surfaces included in the scope of work contain greater than 10% total Lead, and should be treated accordingly. LBP must be removed in locations where all building components including structural steel are to be cut to facilitate dismantling and demolition procedures, as per Section 01420 SAFETY, Section 02220 DEMOLITION and this specification. The detailed work and demolition procedures related to demolition and dismantling are to be determined in the field. Work includes: removal of LBP from surfaces utilizing mechanical and manual methods where necessar to cut and dismantle components located within this facility. Chemical caustic strippers can be utilized for work on this project where no adverse

impact on new work will be realized. However, only non-methylene chloride containing strippers shall be used. Copies of the stripping products MSDS sheets shall be submitted for review by the Contractor's IH and the Contracting Officer.

Chemical strippers used by the Contractor shall not have an adverse impact on other individuals in the area. Appropriate personal protective equipment as determined by the Contractor's IH shall be provided.

1.4 MEASUREMENT AND PAYMENT

All lead based paints (LBP) abatement work shall be measured and paid for as specified in Section 01025 MEASUREMENT AND PAYMENT.

1.5 QUALITY CONTROL

1.5.1 Qualifications

a. Contractor: Certification that the Contractor or its designated sub-contractor has prior experience on LBP abatement projects similar in nature and extent to ensure the capability to perform the abatement in a satisfactory manner.

b. Competent Person: This person shall have completed a Contractor Supervisor LBP abatement course by an EPA Training Center or an equivalent certification course, and have had a minimum of 2 years on-the-job experience.

c. Industrial Hygienist: Certification that the Industrial Hygienist meets the Office of Personnel Management Standard for the Industrial Hygiene Series GS-690, and has a minimum of two years IH experience with a minimum of 6 months experience in LBP abatement. Certification that the Contractor's full-time onsite IH meets the competent person requirements of 29 CFR 1926 Section .62 and is experienced in administration and supervision of LBP abatement projects, including work practices, protective measures for building and personnel, disposal procedures, etc.

d. Testing Laboratory: The name, address, and telephone number of the independent testing laboratory selected to perform analysis for personal air samples and TCLP analysis. Documentation that the laboratory performing the analysis is an EPA National Lead Laboratory Accreditation Program (NLLAP) accredited laboratory and that it is rated proficient in the NIOSH/EPA Environmental Lead Proficiency Analytical Testing Program (ELPAT). Certification shall include accreditation for heavy metal analysis, list of experience relevant to analysis of lead in air, and a Quality Assurance and Quality Control Program. Currently, the American Association for Laboratory Accreditation (ASLA) and the American Industrial Hygiene Association (AIHA) are the EPA recognized laboratory accreditors. Documentation shall include the date of accreditation or reaccreditation.

e. Blood Lead Testing Laboratory. The name, address and telephone

number of the blood lead testing laboratory; the laboratory's listing by OSHA and the U.S. Public Health Service Center for Disease Control (CDC); and documentation that the laboratory is certified in New York State.

1.5.2 Respiratory Protection Devices

Manufacturer's certification of NIOSH or the Mine Safety and Health Administration (MSHA) approval for respiratory protection devices utilized on the site.

1.5.3 Cartridges, Filters, and Vacuum Systems

Manufacturer's certification of NIOSH approval of respirator cartridges (organic vapor, acid gas, mist, dust, high efficiency particulate); High Efficiency Particulate Air (HEPA) filtration capabilities for all cartridges, filters, and HEPA vacuum systems.

1.5.4 Medical Records

Certification that employees who are involved in LBP abatement work have received medical examinations and will receive continued medical surveillance, including biological monitoring, as required by 29 CFR 1926 Section .62 and by the New York State and local regulations pertaining to such work. Records shall be retained, at Contractor expense, in accordance with 29 CFR 1910 Section .20.

1.5.5 Training

Training certification shall be provided prior to the start of work involving LBP abatement, for all of the Contractors' workers, supervisors and Competent Person. Training shall meet the requirements of 29 CFR 1926 Section .62, 29 CFR 1926 Section .59 and 49 CFR 172, and that required by EPA or the New York State LBP course for the work to be performed. Training shall be provided prior to the time of job assignment and, at least, annually. Training shall be translated and performed in the bilingual language of the worker. Training may cover all abatement methods or focus only on those methods specified in the LBP Management Plan. The Contractor shall also provide initial job specific training for Contracting Officer Representatives. The project specific training shall, as a minimum, include the following:

a. Specific nature of the operation which could result in exposure to lead.

b. Purpose, proper selection, fitting, use, and limitations of respirators.

c. Purpose and description of the medical surveillance program and the medical removal protection program, including information concerning the adverse health effects associated with excessive exposure to lead (with particular attention to the adverse reproductive effects on both males and females and hazards to the fetus and additional precautions for employees who are pregnant).

d. Relevant engineering controls and good work practices.

e. The contents of any compliance plan in effect.

f. Instructions to employees that chelating agents should not routinely be used to remove lead from their bodies and should not be used at all except under the direction of a licensed physician.

g. The employee's right of access to records under 29 CFR 1910Section .20.

1.5.6 Licenses and Permits

Copies of licenses and permits as required by applicable Federal, New York State, and local regulations shall be obtained at least 10 business days before the start of the LBP abatement project.

1.6 SITE VISIT

Contractor shall visit and investigate the site, review the drawings and specifications, assess the amount of LBP, and become familiar with conditions which will affect the work.

1.7 LIABILITY INSURANCE FOR LBP

LBP abatement liability insurance shall be obtained without additional expense to the Government. The Contractor shall assume full responsibility and liability for the compliance with Federal, New York State, and local regulations pertaining to training, work practices, hauling, disposal, and protection of workers, visitors to the site, and persons occupying areas adjacent to the site.

1.8 PROTECTION OF EXISTING WORK TO REMAIN

Abatement, storage, transportation, and disposal work shall be performed without damaging or contaminating adjacent work and areas. Where such work or areas are damaged or contaminated, the Contractor shall restore work and areas to the original condition. Restoration work shall be to the satisfaction of the Contracting Officer.

1.9 COORDINATION WITH OTHER WORK

Abatement and disposal work shall be coordinated with Owner and area operations, existing work and/or concurrent work being performed in adjacent areas. This shall include reinforcement of existing structural steel members, as well as demolition and dismantling of similar structural steel supports and metal components, as discussed within Section 02220.

1.10 SAFETY AND HEALTH REGULATORY REQUIREMENTS

Work shall be performed in accordance with requirements of EM 385-1-1and applicable regulations including, but not limited to 29 CFR 1910, 29 CFR 1926, especially Section .62. Matters of interpretation of the standards

shall be submitted to the appropriate agency for resolution before starting work. Where these requirements vary, the most stringent shall apply.

1.11 PRECONSTRUCTION SAFETY MEETING

The Contractor, his Competent Person, and his Industrial Hygienist (IH) shall attend a preconstruction safety meeting prior to starting any work involving LBP abatement. Items required to be submitted will be reviewed for completeness, and where specified, for acceptance.

1.12 LEAD APPENDIX TO THE ACCIDENT PREVENTION PLAN

1.12.1 Preparation and Implementation

The Accident Preparation Plan (APP) shall be prepared in accordance with EM 385-1-1, Table 1-1. Where topic in table 1-1 is not applicable, the APP shall justify its omission or reduced level of detail, and establish that adequate consideration was given to the topic. The APP shall cover onsite work by the Contractor or subcontractors. The Contractor's IH shall be responsible for development, implementation, and quality control of the content and actions required in the APP. For each anticipated work task, the APP shall establish hazards and control measures. The APP shall be easily readable and understandable by the Contractor's work force.

1.12.2 Acceptance and Modifications

The APP shall be prepared, signed and dated by the Contractor's IH and submitted a minimum of ten (10) days prior to the preconstruction safety conference. Deficiencies in the APP shall be discussed at the Preconstruction Safety Conference and the APP shall be revised to correct the deficiencies, and resubmitted for acceptance. Onsite work shall not begin until the APP has been accepted unless otherwise authorized by the Contracting Officer. One copy of the APP shall be maintained in the Contractor's jobsite file, and a second copy shall be posted where it will be accessible to personnel on the site. As work proceeds, the APP shall be adapted to new situations and conditions. Changes to the APP shall be made with concurrence of the Contractor's IH and Site Superintendent, and acceptance of the Contracting Officer. Should an unforeseen hazard become evident during performance of the work, the Contractor's IH shall bring such hazard to the attention of the Superintendent and the Contracting Officer, both verbally and in writing, for resolution as soon as possible. In the interim, the Contractor shall take necessary action to re-establish and maintain safe working conditions; and to safeguard onsite personnel, visitors, the public, and the environment. Disregard for provisions of this specification, or the accepted APP shall be cause for stopping of work until the matter is rectified.

1.12.3 Activity Hazard Analyses

An Activity Hazard Analysis (AHA) shall be prepared prior to beginning each major phase of the work and submitted for review and acceptance. Format shall be in accordance with EM 385-1-1, figure 1-1. A major phase of work is defined as an operation involving hazards not experienced in previous operations, or where a new work crew is to perform. The analysis shall

define the activities and the sequence in which they are to be performed, specific hazards anticipated, and control measures to be implemented to eliminate or reduce each hazard to an acceptable level. Work shall not proceed on that phase until the Activity Hazard Analysis has been accepted and a preparatory meeting has been conducted by the Contractor to discuss content of the AHA with everyone engaged in the activity, including the Government's onsite representative. The AHA shall be continuously reviewed and modified when appropriate to address changing conditions or operations. The accepted AHA shall be appended to and become part of the APP.

1.13 RESPIRATORY PROTECTION PROGRAM

A respiratory protection program shall be established as required by 29 CFR 1926 Section .103 and .62 and in accordance with 29 CFR 1910Section .134. An approved respirator shall be furnished to each employee and visitor required to enter a LBP work control area. A fit test shall be conducted in accordance with 29 CFR 1926 Section .62, Appendix D.

1.14 HAZARD COMMUNICATION PROGRAM

A Hazard Communication Program shall be implemented in accordance with 29 CFR 1926 Section .59.

1.15 SAFETY AND HEALTH OVERSIGHT

The Competent Person shall be the onsite person responsible for coordination, safety, security and execution of the work. The Competent Person shall be able to identify existing and predictable lead hazards and shall have the authority to take corrective measures to eliminate them. The Contractor's IH shall be responsible for personal sampling and collection of TCLP samples. The Contractor's IH shall be responsible for environmental air sampling clearance wipe testing, and oversight of TCLP sampling and testing.

1.16 PREPARATORY INSPECTION MEETING

The Contractor his Competent Person and Industrial Hygienist (IH) shall arrange and hold a preparatory inspection meeting immediately prior to beginning any LBP abatement. The APP, Activity Hazard Analyses, and the Contractor's LBP Management Plan, including containment, engineering controls, worker protection, training, and monitoring, will be reviewed for completeness.

1.17 TRAINED AND COMPETENT PERSONNEL

Work shall be performed by competent and qualified personnel, qualified and trained in the abatement, enclosure, encapsulation, monitoring, testing, storage, treatment, hauling, and disposal of contaminated LBP debris material, and in subsequent cleanup of the affected environment. Workers shall comply with the appropriate Federal, New York State, and local regulations, which mandate training requirements and work practices and shall be capable of performing the work under this contract.

1.18 POSTED WARNINGS AND NOTICES

The following regulations, warnings, and notices shall be posted at the work site in accordance with 29 CFR 1926 Section .62.

1.18.1 Regulations

Two copies of applicable Federal, New York State, and local regulations and NIOSH OSHA Booklet 3142 shall be maintained. One copy shall be posted at the work site and one copy shall be on file in the project office.

1.18.2 Warning Signs and Labels

Warning signs shall be provided at building entrances and approaches to LBP control areas containing airborne LBP debris. Signs shall be located at a distance from the LBP control areas that will allow personnel to read the sign and take the necessary protective actions required before entering the LBP control area.

1.18.2.1 Warning Signs

Warning signs shall be in English and be of sufficient size to be clearly legible and display the following:

WARNING
LEAD WORK AREA
POISON
NO SMOKING OR EATING
AUTHORIZED PERSONNEL ONLY
RESPIRATORS AND PROTECTIVE CLOTHING ARE REQUIRED IN THIS AREA

1.18.2.2 Warning Labels

Warning labels shall be in English and the language spoken by the majority of the Contractor's work crew and be of sufficient size to be clearly legible and display the following:

CAUTION: CLOTHING CONTAMINATED WITH LEAD. DO NOT REMOVE DUST BY BLOWING OR SHAKING. DISPOSE OF LEAD CONTAMINATED WASH WATER IN ACCORDANCE WITH APPLICABLE FEDERAL, NEW YORK STATE OR LOCAL REGULATIONS.

1.18.3 Worker Information

Right-to-know notices shall be placed in clearly visible areas of the work site in compliance with Federal, New York State, and local regulations.

1.18.4 Air Monitoring Results

Daily personal air monitoring results shall be prepared so as to be easily understood by the workers, and shall be placed in a clearly visible area of the work site.

1.18.5 Emergency Telephone Numbers

A list of telephone numbers shall be posted at the site. The list shall

include numbers of the local hospital, emergency squad, police and fire departments, Government and Contractor representatives who can be reached 24 hours per day, and professional consultants directly involved in the project.

1.19 EQUIPMENT AND MATERIALS

Sufficient quantities of health and safety materials required by 29 CFR 1926 Section .62, and other materials and equipment needed to complete the project, shall be available and kept on the site.

1.19.1 Respirators

Air-purifying respirators shall be approved by NIOSH for use with dust, fumes, and mists having permissible exposure limits less than 0.05 milligrams per cubic meter (i.e., have high-efficiency particulate air (HEPA) filters) and for other hazardous airborne contaminants that may be encountered, as determined by the Contractor's IH. Respirators shall comply with the requirements of 29 CFR 1926 Section .62 and shall be used in accordance with 29 CFR 1926 Section .103 and 29 CFR 1910Section .134.

1.19.2 Respirator Cartridges

A sufficient supply of respirator cartridges shall be maintained at the work site to provide new cartridges to employees, authorized visitors, and Government personnel throughout the duration of the project. Cartridges shall be replaced according to the manufacturer's recommendations, when breathing becomes difficult, or if the cartridge becomes wet.

1.19.3 Protective Clothing

The Contractor shall furnish, at no cost to personnel, equipment/clothing for protection from airborne and waterborne LBP debris. An adequate supply of these items shall be available for worker, authorized visitor, and Government personnel use. Workers and visitors shall not take protective clothing and equipment off the work site at any time. Protective clothing includes:

a. Coveralls (Whole Body Protective Coverings): workers in the work area shall wear Full-body coveralls and head covers. Sleeves shall be secured at the wrist and pants legs at the ankle with tape. Permeable clothing shall be provided in heat-stress conditions. Where non-disposable coveralls are provided, these coveralls shall be cleaned after each wearing. Cleaning of coveralls and other non-disposable clothing shall be in accordance with the provisions for cleaning in 29 CFR 1926 Section .62.

b. Boots: Work boots with nonskid soles or impermeable work boot covers shall be worn by workers. Where required by OSHA, safety boots (steel toe or steel toe and shank) shall be worn. Paint the uppers of boots red with waterproof enamel. Do not allow boots to be removed from the work area for any reason after being contaminated with LBP debris. Dispose of boots as LBP contaminated waste at the end of the work.

c. Gloves: Inner gloves, appropriate for items and hazards encountered, and disposable outer work gloves shall be provided to each worker and shall be worn while the worker is in the work area. Glove material shall be appropriate for the specific chemical exposure. Gloves shall not be removed from the work area, and shall be disposed of as LBP contaminated waste at the end of the work.

d. Hard Hats: Head protection (hard hats) shall be provided as required by OSHA and EM 385-1-1 for workers and authorized visitors. Protective plastic strap suspension hats shall be used. Hard hats shall be worn at all times that work is in progress. Hats shall remain in the work area until the project is completed. Hats shall be thoroughly cleaned, decontaminated, and bagged before being removed from the work area at the end of the project.

e. Eye Protection: Fog-proof goggles for personnel engaged in LBP abatement operations shall be worn when the use of a full face piece respirator is not required.

f. Work Clothing: Cloth work clothes shall be provided for wearing under the disposable protective coveralls and foot coverings.

1.19.4 Negative Air Pressure System

When a LBP control area requires the use of an airtight containment barrier, a negative air pressure system shall be used, and pressure differential recordings taken. LBP shall not be removed from the LBP control area until the proper engineer controls and HEPA filtration systems are in place.

1.19.4.1 HEPA Filter Requirements

The negative air pressure system shall be equipped with approved HEPA filters per UL 586. Negative air pressure equipment shall be equipped with new HEPA filters, and shall be sufficient to maintain a minimum pressure differential of minus 0.02 inch of water column relative to adjacent, unsealed areas. Negative air pressure system minimum requirements are listed below.

a. The unit shall be capable of delivering its rated volume of air with a clean first stage filter, an intermediate filter and a primary HEPA filter in place.

b. The HEPA filter shall be certified as being capable of removing particles as small as 0.3 micrometers at a minimum efficiency of 99.97 percent.

c. The unit shall be capable of continuing to deliver no less than 70 percent of rated capacity when the HEPA filter is 70 percent full or measures 2.5 inches of water static pressure differential on a mangehelic gage.

d. The unit shall be equipped with a manometer-type negative pressure differential monitor with minor scale division of 0.02 inch of water and accuracy within plus or minus 1.0 percent. The manometer shall be calibrated daily as recommended by the manufacturer. Record manually manometer readings of the pressure differential between the LBP control area and adjacent unsealed areas at the beginning of each workday and every 2 working hours thereafter.

e. The unit shall be equipped with a means for the operator to easily interpret the readings in terms of the volumetric flow rate of air per minute moving through the machine at any given moment.

f. The unit shall be equipped with an electronic mechanism that automatically shuts the machine off in the event of a filter breach or absence of a filter.

g. The unit shall be equipped with an audible horn that sounds an alarm when the machine has shut itself off.

h. The unit shall be equipped with an automatic safety mechanism that prevents a worker from improperly inserting the main HEPA filter.

i. The unit shall be ducted through the containment barrier wall to the outside of the building. The unit shall not be exhausted into any work area.

1.19.4.2 Number of Units Required

The air within the containment barrier shall be changed at least once every 15 minutes by a continuously operating negative air pressure system, until the LBP control area barrier is removed. Filters shall be replaced as necessary to maintain the efficiency of the system. A back-up unit shall be maintained onsite.

1.19.4.3 Auxiliary Generator

An auxiliary generator shall be provided with a capacity adequate to power a minimum of 50 percent of the negative air machines at any time during the work. When power fails, the generator controls shall automatically start the generator and switch the negative air pressure system machines to generator power. The generator shall not present a carbon monoxide hazard to workers.

1.19.4.4 Local HVAC Systems

The building heating, ventilating, and air conditioning (HVAC) system shall not be used as the negative air pressure system for the LBP control area.

1.19.4.5 Discontinuing Negative Air Pressure System

The negative air pressure system shall not be shut down during LBP abatement work unless authorized by the Contracting Officer. At the completion of the LBP abatement and disposal project, units shall be run

until full cleanup has been completed and wipe clearance samples have been collected, analyzed, and have passed final clearance testing requirements. Dismantling of the negative air pressure systems shall conform to the written decontamination procedures. Prefilters shall be removed and properly disposed of, and the intake to the machines shall be sealed with polyethylene to prevent environmental contamination.

1.19.5 Expendable Supplies

1.19.5.1 Polyethylene Sheet and Bags - General

Polyethylene sheet and bags shall be minimum 6 mils thick. Bags shall have pre-printed labels, and 5 inch (minimum) long plastic ties, pointed and looped to secure the filled bags. Polyethylene sheets shall be in roll sizes to minimize seams.

1.19.5.2 Polyethylene Sheet - Flame Resistant

Where a potential for fire exists, flame-resistant polyethylene sheets shall be provided. Polyethylene film shall be frosted or clear and shall conform to the requirements of NFPA 701.

1.19.5.3 Polyethylene Sheet - Reinforced

Reinforced polyethylene sheet shall be provided where high skin strength is required such as where it constitutes the only barrier between the LBP control area and the outdoor environment. The sheet stock shall consist of translucent, nylon-reinforced or woven-polyethylene thread laminated between two layers of polyethylene film. Film shall meet flame resistant standards of NFPA 701.

1.19.5.4 Tape and Adhesive Spray

Tape and adhesive shall be capable of sealing joints between polyethylene sheets and for attachment of polyethylene sheets to adjacent surfaces. After dry application, tape or adhesive shall retain adhesion when exposed to wet conditions, including amended water. Tape shall be minimum 2 inches wide, industrial strength.

1.19.5.5 Containers

Impermeable containers shall be used to receive and retain lead contaminated material until disposal. Containers shall be labeled in accordance with EPA, DOT and OSHA standards.

1.19.6 Vacuum Systems

HEPA filtered vacuum systems shall be used during abatement operations which generate dust. The systems shall be suitably sized for the project, and filters shall be capable of removing particles as small as 0.3 micrometers at a minimum efficiency of 99.97 percent.

1.19.7 Heat Blower Guns

Heat blower guns shall be flameless, electrical, paint-softener type with controls to limit temperature to 1,100 degrees F. Heat blower shall be DI (non-grounded) 120 Vac, and shall be equipped with cone, fan, glass protector and spoon reflector nozzles.

1.19.8 Chemical Paint Stripper Neutralizer

Neutralizers for paint strippers shall be compatible with the substrate and suitable for use with the chemical stripper that has been applied to the surface.

1.19.9 Detergents and Cleaners

Detergents or cleaning agents used shall have demonstrated effectiveness in lead control work using cleaning techniques specified by guidelines.

1.20 STORAGE OF MATERIALS

Materials shall be stored in a place and manner, which protects them from damage and contamination. During periods of cold weather, plastic materials shall be protected from the cold. No flammable or hazardous materials shall be stored inside any building. Regularly inspect materials to identify damaged or deteriorating items. Damaged or deteriorated items shall not be used and shall be removed from the site as soon as they are discovered. Any materials which become contaminated with LBP waste shall be disposed of consistent with the requirements of 40 CFR 148 and these specifications. Stored materials shall not present a hazard or an inconvenience to workers, visitors, and/or other occupants and employees of the building. All LBP removed from its substrate, all contaminated work materials, and discarded PPE shall be classified as hazardous waste. These materials and waste shall be stored separately in a locked container or area until it can be disposed of properly.

PART 2 PRODUCTS (NOT APPLICABLE)

PART 3 EXECUTION

3.1 PILOT ABATEMENT PROJECT

Prior to beginning full-scale demolition and dismantling of the structural steel and metal components of the Arvin Cadet Physical Development Center , a pilot abatement project shall be performed by the Contractor to demonstrate the specified abatement procedures to be utilized at all locations in which steel or metal components are to be cut. The pilot project shall imitate, to the extent feasible, typical procedures as will be followed in the field. Work shall be performed at a location in which a metal component or structural steel will be saw or torch cut within the Arvin Cadet Physical Development Center as part of the demolition process. Preabatement lead dust samples shall be collected from each type of surface in the pilot containment as specified in paragraphs Wipe Sampling, and Preabatement Lead-Dust Wipe Samples. The Contractor's IH shall evaluate the following during the pilot abatement project:

a. Lead dust wipe samples shall be collected and analyzed during

abatement and for final clearance as specified in paragraph Wipe Sampling. If results of analysis indicate that lead levels are above clearance levels, the Contractor shall evaluate his/her abatement cleanup procedures. If clearance levels are low and continue to be low, the Contractor may propose less restrictive engineering controls.

b. If personal air sample analyses indicate that action levels or permissible exposure limits specified in 29 CFR 1926 Section .62 have not been exceeded, then respirator protection may become less restrictive. Half-face respirators shall be the minimum respiratory protection employed.

c. During cleanup a final dust wipe clearance shall be performed after a single cleanup iteration. If the samples are below acceptable levels the Contractor may request approval for one cleanup pass instead of two cleanup passes.

d. Adequate samples of waste generated (water, solid components, caustic paste, filters, paint chips, etc.) shall be collected for Toxicity Characteristic Leaching Procedure (TCLP) testing. An accredited laboratory shall perform the TCLP test.

e. Waste generated throughout the abatement project shall be properly containerized, according to applicable regulations, and disposed of as per the results of the TCLP analysis. All metallic objects, including structural steel, coated with LBP shall be segregated from the rest of the waste stream, and be sent to a steel recycling facility. The facility must be notified of the presence of LBP prior to any contaminated items being sent.

3.2 WORK PROCEDURES

LBP abatement and related work shall be performed in accordance with the accepted Contractor's LBP Management Plan as modified and approved, following the pilot abatement project, and in conjunction with Section 02220. Procedures and equipment required to limit occupational and environmental exposures to lead during LBP removal shall be in accordance with 29 CFR 1926 Section .62, and as specified herein. Paint chips and associated waste shall be disposed of in compliance with Federal, New York State, and local regulations.

3.2.1 Personnel Protection Procedures

Personnel shall wear and use protective clothing and equipment as specified. Eating, smoking, drinking, chewing tobacco and chewing gum, and applying makeup shall not be permitted in the LBP control area. Personnel of trades not engaged in the abatement and disposal of LBP shall not be exposed at any time to airborne concentrations of lead equal to or in excess of 30 micrograms per cubic meter of air. Electrical service shall be disconnected when wet removal is performed, and temporary electrical service protected by a ground fault circuit interrupter shall be provided.

3.2.2 Safety and Health Procedures

The Contractor's IH shall be present on the work site throughout the abatement project to supervise, monitor, and document the project's health and safety provisions. A daily log shall be maintained showing the results of sampling tests throughout the project area. LBP abatement work being conducted within a LBP Control area where an airtight barrier is required shall be stopped if dust wipe concentration levels collected outside the containment area during abatement, equal or exceed the preabatement level or 200 micrograms per square foot, whichever is greater.

3.2.3 Safety and Health Responsibilities

The Contractor's IH shall:

a. Verify that training meets applicable requirements.

b. Review and approve LBP Management Plan for conformance to the applicable referenced standards.

c. Inspect LBP removal work for conformance with the accepted LBP Management Plan.

d. Ensure that worker exposure air monitoring activities are in accordance with 29 CFR 1926 Section .62.

e. Ensure work is performed in strict accordance with specifications.

f. Ensure hazardous exposure to personnel and to the environment are adequately controlled.

The Contractor's IH shall be responsible for directing personal air monitoring. The Contractor's IH shall be responsible for performing environmental air sampling and clearance dust wipe sampling. The Contracting Officer may conduct quality assurance tests.

3.2.4 Medical Surveillance Procedures

Medical surveillance shall be implemented in accordance with the approved Contractor's LBP Management Plan, and shall comply with the requirements of 29 CFR 1926 Section .62, including the provisions for biological monitoring, medical removal protection and a physician's written opinion, signed by the physician performing the employee examination. The Contractor shall provide a copy of the written opinion for Contractor's employees 2 days prior to each employee's commencement of work.

3.2.5 Engineering Controls and Containment Structures

3.2.5.1 LBP Control Area

The LBP control area is where LBP abatement work occurs and as such shall be considered contaminated, and shall be isolated to prevent LBP containing dust or debris from passing into adjacent building or open areas. The control area shall be decontaminated at the completion of the LBP abatement and disposal work.

3.2.5.2 Boundary Requirements

Physical boundaries shall be provided around exterior LBP control areas by roping off the area indicated in the LBP Management Plan. Interior projects shall be isolated by curtains, portable partitions, or other enclosures to ensure that concentrations of lead dust outside the LBP control area will not equal or exceed the preabatement level or 200 micrograms per square foot, whichever is greater.

3.2.5.3 Control Barriers

The LBP control area shall be separated from other portions of the building and the outside with control barriers. The polyethylene sheeting will have all openings masked and sealed, and shall be erected according to the Contractor's LBP Management Plan. Polyethylene sheeting shall be mechanically supported, independent of duct tape or spray adhesive.

3.2.5.4 Preabatement Lead-Dust Wipe Samples

Preabatement lead-dust wipe samples shall be taken outside the LBP controlled area, in accordance with HUD-01. Samples shall be taken within 10 feet of the abatement structure at 20 percent of the area planned for abatement.

3.2.5.5 Masking and Sealing

a. Interior LBP control area requirements: Openings shall be sealed where the release of airborne LBP dust is expected. A control area shall be established with the use of curtains, portable partitions, or other systems in order to prevent the escape of dust from the contaminated control area. The control area shall be provided with protective covering of two layers of polyethylene sheeting over floors. Penetrations of the floor, walls, and ceiling shall be sealed with polyethylene sheeting and duct tape. Polyethylene sheeting shall be firmly attached to the structure. Joints shall be sealed with spray adhesive and duct tape. Openings shall be provided for the supply and exhaust of air for the negative air pressure system. Personal monitoring during the work shift shall be in accordance with 29 CFR 1926 Section .62.

b. Exterior LBP control area requirements: Where the construction of a contained LBP control area is impractical, a roped-off perimeter shall be installed 20 feet from, and around, the area where the LBP handling procedures are performed and other requirements for LBP control areas shall be maintained. Personal monitoring of airborne concentrations shall be conducted in adjacent areas, during the work shift, in accordance with 29 CFR 1926 Section .62. Where wipe sampling is not practical, air monitoring outside of the roped-off perimeter shall be conducted as specified. Airborne concentrations shall not exceed specified levels.

3.2.5.6 Personnel Decontamination Unit Procedures

Decontamination units shall be constructed when required for the abatement procedures. Materials fabricated or delivered to the site before the shop drawings have been returned to the Contractor will be subject to rejection by the Contracting Officer. Specifications and drawings of portable prefab units, such as a trailer unit, if utilized, must be submitted for review and approval before start of construction. Submittal shall include, but not be limited to, a floor plan layout showing dimensions, materials, sizes, thicknesses, plumbing, and electrical outlets. Access between contaminated and uncontaminated rooms or areas shall be through an airlock. Access between any two rooms or room and trailer within the decontamination unit shall be through a plastic sheeting curtained doorway. A separate equipment decontamination unit shall be provided. Each work area shall have an emergency exit. The personnel decontamination unit's clean room shall be the only means of entrance and exit, except for emergencies, from the LBP control area. Materials shall exit the LBP control area through the equipment decontamination area.

3.2.5.7 Clean Room Procedures

The clean room shall have only one exit to non-contaminated areas of the building or site. An airtight seal shall be constructed of polyethylene between the clean room and the rest of the building. Surfaces of the clean room shall be protected with sheet polyethylene. A temporary unit with a separate equipment decontamination locker room and a clean locker room shall be provided for personnel who are required to wear whole body protective clothing. One locker shall be provided in each locker room for each LBP abatement worker, and each Contractor's representative. Lead-free personal clothing and shoes shall be kept in the clean locker. Hand wash station/showers shall be located between the equipment decontamination locker room and the clean locker room, and employees shall wash or shower before changing into personal clothes. An adequate supply of clean disposable towels shall be provided. LBP contaminated work clothing shall be cleaned. Clean rooms shall be physically attached to the LBP control area for areas inside the building but may be directly adjacent to the LBP control area outside of the building. Joint use of this space for other functions, such as offices, equipment storage, etc., is prohibited.

3.2.5.8 Hand Wash Station/Shower Room Procedures

An operational shower and hand washing station shall be provided between the work area and the clean changing room. Workers shall wash and/or shower before entering the clean changing room. Shower room shall be separated from other rooms by air tight walls fabricated from polyethylene sheeting. Water shall be hot and cold or warm. Shower heads and controls, soap dish, continuing supply of soap, and clean towels shall be provided. The shower shall be maintained in a sanitary condition. Waste water shall be pumped to drain and through waste water filters that meet New York State and/or local requirements. These filters shall be located inside the shower unit and filters shall be changed regularly. Spent filters shall be discarded as LBP contaminated waste.

3.2.5.9 Equipment Decontamination Unit Procedures

The Equipment Decontamination Unit shall be used for removal of equipment

and materials from the LBP control area, and shall include a wash room, holding room, and an enclosed walkway. The unit shall be constructed from wood framing material and polyethylene sheeting. Workers shall not enter or exit the LBP control area through the Equipment Decontamination Unit. A washdown station, consisting of an enclosed shower unit, shall be located in the work area outside the Wash Room. The washdown station shall be used to clean equipment, bags and containers. Bagged or containerized LBP wastes shall be passed from the work area and cleaned in the Wash Room. The Wash Room shall be separated from the work area by a polyethylene sheeting flap. Wastewater shall be filtered and filters shall be changed as required for the shower unit and the Wash Room. Filters shall be disposed of as LBP contaminated wastes. The Holding Room shall be used as a drop location for bagged LBP passed from the Wash Room. This room shall be constructed so that bagged materials cannot be passed from the Wash Room through the Holding Room to the enclosed walkway. The walkway shall be separated from adjacent rooms by double flaps of 1/16 inch thick single ply rubber roofing materials of EPDM or Neoprene. The enclosed walkway shall isolate the Holding Room from the building exterior and shall be constructed of wood framing and polyethylene sheeting. The walkway shall provide access to the Holding Room from the building exterior. The enclosed walkway shall be separated from the exterior by a single flap of polyethylene sheeting.

3.2.5.10 Maintenance of Decontamination Units

Barriers and polyethylene sheeting shall be effectively sealed and taped. Containment barriers shall be visually inspected at the beginning of each work period. Damaged barriers and defects shall be immediately repaired upon discovery. Smoke methods shall be used to test effectiveness of barriers when directed by the Contracting Officer.

3.2.5.11 LBP Control Area Exiting Procedures

Personnel exiting a LBP control area shall perform the following procedures and shall not leave the work place wearing any clothing or equipment worn during the work day:

a. Vacuum all protective clothing before removing.

b. Remove protective clothing in the decontamination room, and place this clothing in an approved impermeable disposal bag.

c. Wash or shower.

d. Change to clean clothes prior to leaving the physical boundary designated around the lead-contaminated work site.

3.2.6 Furnishings

The Contractor will remove furniture and equipment from the work area before LBP removal work begins.

3.2.7 Building Ventilating Systems

Any building ventilating system or any other system bringing air into or out of the LBP control work area shall be shut down and isolated by lockable switch; disconnecting wires; removing circuit breakers; and isolated by airtight seals, or other positive means that will prevent spread of contamination through the system and accidental premature restarting of the equipment. Airtight seals shall consist of rigid covers for supply and exhaust grills and 2 layers of polyethylene. Individual seals shall be applied to ventilation openings (supply and exhaust), lighting fixtures, clocks, windows, doorways, elevator doors, stairs, ramps, speakers, and other openings into the work area. Seals shall be maintained until project decontamination is completed. After decontamination work has been completed and final air sample testing proves that the area is decontaminated, seals shall be removed and the ventilating systems may be operated again.

3.2.8 Temporary Utilities

Temporary equipment to provide adequate power, light, heat, and water shall be installed to accomplish the abatement operations properly and safely. The Contractor shall maintain the security and maintenance of the utility system in the LBP control areas. In the event of a failure of any utility system, the Government will not be responsible for any loss of time or other expense incurred by the Contractor. Wiring and electrical service shall be as specified in to Section 16415 Electrical Work, Interior or Section 16370 Electrical Distribution System, Aerial. In addition, the Contractor shall provide:

a. Backflow protection on all water connections. Fittings installed by the Contractor shall be removed after completion of work with no damage or alteration to existing water piping and equipment.

b. Heavy-duty abrasion-resistant hoses to provide water to each work area and decontamination area.

c. A hot water heater, if hot water is not supplied through the building's existing water supply to the decontamination showers.

d. Electrical service to work areas. Electrical service shall comply with NEMA, NECA, and UL standards. Warning signs shall be posted at power outlets that are other than 110-120 volt power. Only grounded extension cords shall be used. Incandescent lamps and light fixtures shall be of adequate wattage to provide good illumination in LBP control areas.

e. Temporary heating units, when needed, that have been tested and labeled by UL, FM, or another recognized trade association related to the fuel being consumed. Forced air or fan type units shall not be utilized inside a work area. Units shall have tip-over protection.

f. Sufficient quantity of single-occupant, self-contained chemical toilets, properly vented and fully enclosed, if permanent toilets are not available.

3.3 LBP ABATEMENT METHODS

3.3.1 Component Removal

All building components coated with Lead Based Paint (LBP) shall be removed from the area of work, as indicated, and be disposed of properly. All metal components shall be segregated from the rest of the waste stream and shall be recycled at an approved and notified recycling facility. All LBP paint chips or debris and associated removal materials and PPE shall be handled in accordance with the Hazardous Waste Management Plan.

3.3.2 Chemical Stripping

Chemical caustic strippers can be utilized for work on this project where no adverse impact on new work will be realized. However, only non-methylene chloride containing strippers shall be used. Copies of the stripping products MSDS sheets shall be submitted for review by the Contractor's IH and the Contracting Officer.

3.3.3 Hand-Scraping with a Heat Gun

LBP shall be removed from surfaces to be impacted by the proposed construction and demolition procedures by hand-scraping with a heat gun. Paint residue shall be handled in accordance with the Hazardous Waste Management Plan. Heat guns shall be operated below 1,100 degrees F to prevent possible release of toxic fumes or starting a fire.

3.3.4 Vacuum Blasting

LBP shall be removed from surfaces to be impacted by the proposed construction and demolition procedures by vacuum blasting techniques with the device fitted to HEPA vacuum systems. Work shall be performed in a LBP control area using negative pressure full containment with HEPA filtered exhaust. Paint residue shall be handled in accordance with the Hazardous Waste Management Plan.

3.3.5 Needle Gun

LBP shall be removed from surfaces to be impacted by the proposed construction and demolition procedures by needle gun with the device fitted to HEPA vacuum systems. Work shall be performed in a LBP control area using negative pressure full containment with HEPA filtered exhaust. Paint residue shall be handled in accordance with the Hazardous Waste Management Plan.

3.4 MONITORING

During the entire LBP removal and disposal operations, the Contractor's Competent Person and the Contractor's IH shall be onsite directing the monitoring/sampling and inspecting the work to ensure that the health and safety requirements of this contract are satisfied.

3.4.1 Personal Air Monitoring

Airborne concentrations of lead shall be collected and analyzed in accordance with 29 CFR 1926 Section .62. Results shall be reported in micrograms per cubic meter of air. The Contractor's IH shall use personal air monitoring results to determine the effectiveness of engineering controls, the adequacy of PPE and to determine if proper work practices are being employed. The Contracting Officer shall be notified if any personal air monitoring result equals or exceeds 30 micrograms per cubic meter of air. The Contractor shall take steps to reduce the concentration of lead in the air.

3.4.2 Wipe Sampling

Wipe sampling for lead dust concentrations shall be conducted:

a. Preabatement to establish a baseline.

b. During abatement to monitor activities and ensure containment integrity.

c. Post abatement to determine if specified clearance criteria has been met.

3.4.2.1 Preabatement

Preabatement wipe samples shall be collected outside the LBP control area in accordance with paragraph Preabatement Lead-Dust Wipe Samples. Samples outside the LBP control work area shall be collected at critical barriers, in the clean room of the decontamination unit and in traffic control areas such as personal and equipment entrances.

3.4.2.2 Abatement

The Contractor's IH shall collect wipe samples at the completion of all LBP abatement activities. The samples shall be collected outside the LBP control area in accordance with paragraph Preabatement Lead-Dust Wipe Samples. Samples shall be collected outside the LBP control work area at critical barriers, in the clean room of the decontamination unit and in traffic control areas such as personal and equipment entrances.

3.4.2.3 Results

The Contractor shall have the results of the wipe sampling within 48 hours after the completion of the sampling. Results shall be reported in micrograms per square foot.

3.4.2.4 Excessive Levels

LBP abatement work being conducted within a LBP control area shall be stopped if measured dust wipe concentration levels collected outside the containment area, during abatement, equal or exceed the preabatement levels or 200 micrograms per square foot, whichever is greater. The Contractor shall immediately notify the Contracting Officer. At the direction of the Contracting Officer, the Contractor shall clean outside areas which equal or exceed the levels stated above, at no additional cost to the Government.

The cleaning shall be in accordance with paragraph CLEANUP AND DISPOSAL, prior to clearance. The Contractor shall collect and have analyzed additional wipe samples at no charge to the Government to ensure the areas are clean. Cleaning and resampling shall continue until levels as stated above are achieved. The Contractor shall correct containment and/or work practices to mitigate the problem. Removal work shall resume when the Contracting Officer gives approval.

3.4.2.5 Post Abatement

Post abatement samples shall be collected in accordance with paragraph Final Clearance Testing.

3.4.3 Area Air Monitoring

Airborne concentrations of lead shall be collected and analyzed in accordance with 29 CFR 1926 Section .62. Results shall be reported in micrograms per cubic meter of air.

3.4.3.1 Preabatement

Preabatement samples shall be collected in the following locations outside the work area; one upwind of the abatement and two downwind of the abatement activities.

3.4.3.2 Abatement

The Contractor's IH shall collect area air samples on a periodic basis. The samples shall be collected in the same location as the preabatement samples.

3.4.3.3 Results

The Contractor's IH shall have the results of the area air monitoring within 48 hours after completion of the sampling. Results shall be reported in micrograms per cubic meter of air.

3.4.3.4 Excessive Levels

Outdoor LBP abatement shall cease and the Contracting Officer notified if measured airborne lead concentrations, collected during abatement, exceed the preabatement airborne concentration levels. The Contractor may be required to clean and resample the effected area, at no additional cost to the Government, if directed by the Contracting Officer. The Contractor shall correct the work practices and/or engineering controls and shall resume abatement at the direction of the Contracting Officer.

3.4.4 Waste Sampling and Testing

Sampling and testing of all waste is the responsibility of the Contractor, and shall be in accordance with 40 CFR 261. **All waste Toxicity Characteristic Leachate Procedure samples shall be analyzed for Total Lead, Cadmium, and Chromium.**

3.4.5 Soil Sampling

3.4.5.1 Preabatement

In order to establish baseline lead-in-soil conditions on the site prior to the initiation of exterior lead abatement, composite soil samples shall be collected. Eight to ten small portions of surface soil shall be scooped with a fresh 50 mL plastic centrifuge tube and composited in the tube. This will represent a single sample. If excessive paint chips are present in the soil they shall be included in the sample. The 8 - 10 samples shall be collected such that they represent the area where abatement occurred. One shall be taken at the dripline extending out a distance of 10 feet. Sampling shall be on bare soil. The laboratory shall utilize procedures in EPA SOP Publication No. 600/2-91-231 or other procedures required by the state where work is being performed.

3.4.5.2 Post Abatement

Post abatement soil samples shall be collected in the same locations as the preabatement samples utilizing the same procedures. If post abatement soil samples exceed the preabatement levels, the Contractor will be required to perform soil excavation to a depth of two inches in the area specified by the Contracting Officer at no additional cost to the Government. The soil shall be tested as specified in paragraph CLEANUP AND DISPOSAL. Analysis that exceed TCLP limits shall be treated as LBP contaminated waste and disposed accordingly.

3.5 ADJACENT AREAS

Damage to adjacent areas shall be repaired to the approval of the Contracting Officer.

3.6 CLEANUP AND DISPOSAL

3.6.1 Cleanup

3.6.1.1 Daily

Surfaces in the LBP control area shall be maintained free of accumulations of paint chips and dust. Spread of dust and debris shall be restricted; waste shall not be distributed over the work area. Dry sweep or compressed air shall not be used for cleanup. At the end of each shift, the area shall be cleaned of visible lead paint contamination by vacuuming with a HEPA filtered vacuum cleaner and wet mopping the area. LBP abatement work shall cease during the cleanup.

3.6.1.2 Prior to Clearance

Upon completion of the lead paint abatement and a satisfactory visual inspection by the Contractor's IH in a given work area, a preliminary clean-up shall be performed by the Contractor. This clean-up includes removal of any contaminated material, equipment or debris including polyethylene sheeting from the work area, except for critical barriers. The polyethylene sheeting shall be sprayed or misted with water for dust

control, abatement debris removed and then the sheeting removed by folding it in upon itself. Polyethylene sheeting used for critical barriers shall remain in place until final clearance criteria. The following methodology shall be utilized during the cleanup prior to clearance.

a. Lead-contaminated debris shall be containerized in accordance with paragraph Contaminated Waste. Waste bags shall not be overloaded, shall be securely sealed and stored in the designated area until disposal.

b. Non-contaminated debris shall be containerized; removed from the work area and stored in the designated area until disposal in accordance with paragraph Non-Contaminated Waste.

c. Removal of surface polyethylene sheeting shall begin from upper levels such as cabinets and shelves. Removal of floor polyethylene sheeting shall begin at the corners and folded in the middle to contain the dust. Polyethylene shall be disposed of as specified for debris.

d. Cleaning. Once the polyethylene sheeting, except critical barriers is removed from the work area, cleaning shall begin. It shall be done in the following sequence: HEPA Vacuum; Tri-Sodium Phosphate (TSP) wash (or equivalent cleaner); and HEPA Vacuum.

e. HEPA Vacuum. Vacuum all surfaces. Begin with ceilings and proceed down the walls, including window, doors, door trim and ending with floors. Begin vacuuming at the furthest corner from the entrance to the work area.

f. Wet Wash. Wash or mop the surfaces vacuumed in the same sequence. Contractor shall utilize a tri-sodium phosphate (TSP) detergent solution or other equally effective cleaning agent and allow surface to dry.

g. Cleaning Equipment. The Contractor shall prepare and use detergents containing five to ten percent TSP or other equally effective cleaning agent which shall be used in accordance with the manufacturers instructions. The waste water from cleaning shall be contained and disposed of according to applicable Federal, New York State, county and local regulations and guidelines. The waste water shall not be disposed of in storm sewers or sanitary sewers without specific and written Government approval.

3.6.2 Visual Inspection

Upon completion of the final cleaning, the Contractor shall notify the Contracting Officer and request a final visual inspection with the Contracting Officer's representative with the criteria in the final cleaning/visual inspection example format sheet located at the end of this section. If the area does not pass the visual inspection, the Contractor shall reclean the area as required by paragraph CLEANUP AND DISPOSAL, at no additional expense to the Government. Final clearance testing shall not

proceed until the Contracting Officer has accepted the final cleaning by the Contractor.

3.6.3 Final Clearance Testing

Final clearance surface dust sampling shall be conducted after a thorough cleanup has been completed in accordance with the following:

a. One sample (from the floor) shall be taken at each room at each floor in occupied areas adjacent to the demolition area. Pre-demolition wipe samples shall be compared to determine if dust from the demolition and abatement process has contaminated non-demolished or abated areas. The Contractor shall clean up these areas if contamination from the demolition or abatement process occurs.

b. Exterior Sampling: Ten wipe samples shall be taken on exterior horizontal surfaces on adjacent occupied buildings. Sample locations shall be approved by the Contracting Officer.

c. Re-Tests: Should the laboratory results indicate that the wipe test clearance level is exceeded, the Contractor shall re-clean the affected area, at no additional cost to the Government. The Contractor shall utilize specified cleaning methods. Re-testing will then be performed to determine if specified clearance criteria was met. The Contractor shall pay for additional testing and shall provide, at no additional cost to the Government, a re-cleaning of an affected area until the clearance level is achieved.

d. Replacement and/or encapsulation only in limited areas. One wipe sample shall be taken in each abated area divided equally between window wells, window sills, and floors, and one wipe sample outside the containment area within ten feet in 20 percent of the abated units.

e. Exterior abatement. At least one wipe sample shall be taken on a horizontal surface in part of the living area such as a front porch.

Retests. Should laboratory results indicate that the wipe test clearance level is exceeded, the Contractor shall reclean the affected area, at no additional cost to the Government. The Contractor shall utilize specified cleaning methods. Retesting will then be performed to determine if specified clearance criteria was met. The Contractor shall pay for additional testing and shall provide, at no additional cost, a recleaning of an affected area until the clearance level is achieved.

3.6.4 Certification

The Contractor's IH shall certify in writing that inside the LBP control area and the area external to the LBP control area met final clearance requirements.

3.6.5 Removal of Control Area

After approval of the final clearance certification, and when authorized by the Contracting Officer, the LBP control area, containment barriers, and control structures roped-off boundary and warning signs shall be removed.

3.6.6 Disposal

3.6.6.1 Toxicity Characteristic Leaching Procedure (TCLP) Results

The results of the Pilot Abatement Project or the TCLP analysis performed during abatement shall be used to determine disposal procedures. TCLP samples shall be analyzed for Total Lead, Cadmium, and Chromium concentrations.

3.6.6.2 Contaminated Waste

Lead-contaminated waste, scrap, and debris shall be disposed of as follows:

a. Lead-contaminated waste, scrap, debris, bags, containers, equipment, and lead-contaminated clothing, which may produce airborne concentrations of lead particles shall be stored in U.S. Department of Transportation 49 CFR 178 approved 55 gallon drums. Each drum shall be labeled to identify the type of waste as defined in 49 CFR 172 and the date lead-contaminated wastes were first put into the drum. The Uniform Hazardous Waste Manifest forms from Federal and state agencies shall be obtained and completed. Land disposal restriction notifications shall be as required by 40 CFR 268. Lot deliveries of hazardous wastes shall be made as needed to ensure that drums do not remain on the work site longer than 90 calendar days from the date affixed to each drum. The Contracting Officer will assign an area for interim storage of waste-containing drums. The Contractor shall notify the Contracting Officer and the Solid Waste Management Branch at least 14 days prior to shipping hazardous waste from the job site.

b. Lead-contaminated waste shall be handled, stored, transported, and disposed of in accordance with 40 CFR 260, 40 CFR 261, 40 CFR 262, 40 CFR 263, 40 CFR 264, and 40 CFR 265. Land disposal restriction notification shall be as required by 40 CFR 268.

3.6.6.3 Non-Contaminated Waste

Non-contaminated waste, scrap, and debris, as determined by TCLP testing and analysis, shall be disposed of at a Government approved landfill.

3.6.7 Disposal Documentation

Written evidence shall be provided that the hazardous waste treatment, storage, or disposal facility is approved for lead disposal by the EPA and New York State or local regulatory agencies. One copy shall be submitted of the completed manifest; signed, and dated by the initial transporter in accordance with 40 CFR 262.

3.6.8 Title to Materials

Materials resulting from demolition work, except as specified otherwise, shall become the property of the Contractor, and shall be disposed of in accordance with Section 02220 DEMOLITION, except as specified herein.

3.6.9 Payment for Hazardous Waste

Payment for disposal of hazardous waste will not be made until all signed copies of manifests from the treatment or disposal facility certifying the amount of lead-containing materials delivered is returned and all copies are furnished to the Government.

CERTIFICATION OF FINAL CLEANING AND VISUAL INSPECTION

Individual abatement task as identified in paragraph,
Description of Work_____

In accordance with the clearing and decontamination procedures specified in the Contractor's lead hazard abatement plan and this contract, the Contractor hereby certifies that he/she has thoroughly visually inspected the decontaminated regulated work area (all surfaces, including pipes, beams, ledges, walls, ceiling, floor, decontamination unit, etc.) and has found no dust, debris, or lead containing material residue.

BY: (Contractor's signature)_____
Date_____
Print name and
title_____

(Contractor's Onsite Supervisor signature)_____
Date_____
Print name and
title_____

(Contractor's IH signature)_____ Date_____
Print name and
title_____

-- End of Section --

SECTION 02120
TRANSPORTATION AND DISPOSAL OF HAZARDOUS MATERIALS

PART 1 GENERAL

1.1 REFERENCES

The publications listed below form a part of this specification to the extent referenced. The publications are referred to in the text by basic designation only.

CODE OF FEDERAL REGULATIONS (CFR)

40 CFR 61	National Emission Standards for Hazardous Air Pollutants
40 CFR 261	Identification and Listing of Hazardous Waste
40 CFR 262	Standards Applicable to Generators of Hazardous Waste
40 CFR 263	Standards Applicable to Transporters of Hazardous Waste
40 CFR 264	Standards for Owners and Operators of Hazardous Waste Treatment, Storage, and Disposal Facilities
40 CFR 265	Interim Status Standards for Owners and Operators of Hazardous Waste Treatment, Storage, and Disposal Facilities
40 CFR 266	Standards for the Management of Specific Hazardous Wastes and Specific Types of Hazardous Waste Management Facilities
40 CFR 268	Land Disposal Restrictions
40 CFR 270	EPA Administered Permit Programs: The Hazardous Waste Permit Program
40 CFR 279	Standards for the Management of Used Oil
40 CFR 300	National Oil and Hazardous Substances Pollution Contingency Plan
40 CFR 302	Designation, Reportable Quantities, and Notification
40 CFR 761	Polychlorinated Biphenyls (PCBs)

	Manufacturing, Processing, Distribution in Commerce, and Use Prohibitions
49 CFR 107	Hazardous Materials Program Procedures
49 CFR 172	Hazardous Materials Table, Special Provisions, Hazardous Materials Communications, Emergency Response Information, and Training Requirements
49 CFR 173	Shippers - General Requirements for Shipments and Packagings
49 CFR 178	Specifications for Packagings

1.2 SUBMITTALS

Government approval is required for submittals with a "GA" designation; submittals having an "FIO" designation are for information only. Unless otherwise indicated, primary reviewer for these submittals will be the Contracting Officer. The following shall be submitted in accordance with Section 01330 SUBMITTAL PROCEDURES:

SD-1 Data

On-site Hazardous Waste Management Plan; GA. This submittal will be reviewed by the Hazardous Materials Consultant.

Off-site Hazardous Waste Management Plan; GA. This Submittal will be reviewed by the Hazardous Materials Consultant.

Prior to start of work, a plan detailing the manner in which hazardous wastes shall be managed.

SD-09 Reports

Record keeping; FIO.

Information necessary to file state annual or EPA biennial reports for all hazardous waste transported, treated, stored, or disposed of under this contract. The Contractor shall not forward these data directly to the regulatory agency but to the Contracting Officer at the specified time. The submittal shall contain all the information necessary for filing of the formal reports in the form and format required by the governing Federal or state regulatory agency. A cover letter shall accompany the data to include the contract number, Contractor name, and project location.

Spill Response; FIO.

In the event of a spill or release of a hazardous substance (as designated in 40 CFR 302), or pollutant or contaminant, or oil (as governed by the Oil Pollution Act (OPA), 33 U.S.C. 2701 et seq.), the Contractor shall notify the Contracting Officer immediately. If the spill exceeds a reporting threshold, the Contractor shall follow the pre-established procedures for

immediate reporting to the Contracting Officer.

Exception Reports; FIO.

In the event that a manifest copy documenting receipt of hazardous waste at the treatment, storage, and disposal facility is not received within 35 days of shipment initiation, the Contractor shall prepare and submit an exception report to the Contracting Officer within 37 days of shipment initiation.

SD-13 Certificates

Qualifications; FIO.

Copies of the current certificates of registration issued to the Contractor and/or subcontractors or written statements certifying exemption from these requirements.

Off-Site Policy Compliance Certification; FIO.

A letter certifying that EPA considers the facilities to be used for all off-site disposal to be acceptable in accordance with the Off-Site policy in 40 CFR 300, Section .440. This certification shall be provided for wastes from Resource Conservation and Recovery Act (RCRA), 42 U.S.C. 6901 et seq., sites as well as from Comprehensive Environmental Response Compensation and Liability Act (CERCLA), 42 U.S.C. 9601 et seq., responses. See Attachment A sample certification at the end of this section.

Certificates of Disposal; FIO.

Certificates documenting the ultimate disposal of hazardous wastes, polychlorinated biphenyls (PCBs), and/or asbestos within 180 days of initial shipment. Receipt of these certificates will be required for final payment.

Packagings Certification; FIO.

All transportation related shipping documents to the Contracting Officer, including draft hazardous waste manifests, draft land disposal restriction notifications, draft asbestos waste shipment records, draft manifests for PCBs, draft bill of ladings for hazardous materials, lists of corresponding proposed labels, packages, marks, and placards to be used for shipment, waste profiles, and supporting waste analysis documents, for review a minimum of 14 days prior to anticipated pickup. Packaging assurances shall be furnished prior to transporting hazardous material; "generator copies" of hazardous waste manifests; land disposal restriction notifications; asbestos waste shipment records; "generator copies" of manifests used for initiating shipments of PCBs; used oil invoices/shipment records; bill of ladings; and supporting waste analysis documents shall be furnished when shipments are originated; and "receipt copies" of asbestos waste shipment records at the designated disposal facility shall be furnished not later than 35 days after acceptance of the shipment.

SD-18 Records

Hazardous Waste Classification and Manifests; GA.

Waste profiles, analyses, classification, treatment standards, draft shipping documents, EPA form 8700-12 (Notification of Hazardous Waste Activity), and final manifests.

Notices of Non-Compliance and Notices of Violation; FIO.

Notices of non-compliance or notices of violation by a Federal, state, or local regulatory agency issued to the Contractor in relation to any work performed under this contract. The Contractor shall immediately provide copies of such notices to the Contracting Officer. The Contractor shall also furnish all relevant documents regarding the incident and any information requested by the Contracting Officer, and shall coordinate its response to the notice with the Contracting Officer or his designated representative prior to submission to the notifying authority. The Contractor shall also furnish a copy to the Contracting Officer of all documents submitted to the regulatory authority, including the final reply to the notice, and all other materials, until the matter is resolved.

1.3 QUALIFICATIONS

1.3.1 Transportation and Disposal Coordinator

The Contractor shall designate, by position and title, one person to act as the Transportation and Disposal Coordinator (TDC) for this contract. The TDC shall serve as the single point of contact for all environmental regulatory matters and shall have overall responsibility for total environmental compliance at the site including but not limited to accurate identification and classification of hazardous waste and hazardous materials; determination of proper shipping names; identification of marking, labeling, packaging and placarding requirements; completion of waste profiles, hazardous waste manifests, asbestos waste shipment records, PCB manifests, bill of ladings, exception and discrepancy reports; and all other environmental documentation. The TDC shall have, at a minimum, one year of specialized experience in the management and transportation of hazardous waste.

1.3.2 Training

The Contractor's hazardous materials employees shall be trained, tested, and certified to safely and effectively carry out their assigned duties in accordance with Section 01420 SAFETY. Training shall be translated and performed in the bilingual language of the worker. The Contractor's employees transporting hazardous materials or preparing hazardous materials for transportation shall be trained, tested, and certified in accordance with 49 CFR 172.

1.3.3 Certification

The Contractor and/or subcontractors transporting hazardous materials shall possess a current certificate of registration issued by the Research and Special Programs Administration (RSPA), U.S. Department of Transportation,

when required by 49 CFR 107, Subpart G.

1.4 LAWS AND REGULATIONS REQUIREMENTS

Work shall meet or exceed the minimum requirements established by Federal, state, and local laws and regulations which are applicable. These requirements are amended frequently and the Contractor shall be responsible for complying with amendments as they become effective. In the event that compliance exceeds the scope of work or conflicts with specific requirements of the contract, the Contractor shall notify the Contracting Officer immediately.

1.5 DEFINITIONS

a. Hazardous Material. A substance or material which has been determined by the Secretary of Transportation to be capable of posing an unreasonable risk to health, safety, and property when transported in commerce, and which has been so designated pursuant to the Hazardous Materials Transportation Act, 49 U.S.C. Appendix Section 1801 et seq. The term includes materials designated as hazardous materials under the provisions of 49 CFR 172, Sections .101 and .102 and materials which meet the defining criteria for hazard classes and divisions in 49 CFR 173. EPA designated hazardous wastes are also hazardous materials.

b. Hazardous Waste. A waste which meets criteria established in RCRA or specified by the EPA in 40 CFR 261 or which has been designated as hazardous by a RCRA authorized state program.

PART 2 PRODUCTS

2.1 MATERIALS

The Contractor shall provide all of the materials required for the packaging, labeling, marking, placarding and transportation of hazardous wastes and hazardous materials in conformance with Department of Transportation standards. Details in this specification shall not be construed as establishing the limits of the Contractor's responsibility.

2.1.1 Packagings

The Contractor shall provide bulk and non-bulk containers for packaging hazardous materials/wastes consistent with the authorizations referenced in the Hazardous Materials Table in 49 CFR 172, Section .101, Column 8. Bulk and non-bulk packaging shall meet the corresponding specifications in 49 CFR 173 referenced in the Hazardous Materials Table, 49 CFR 172, Section .101. Each packaging shall conform to the general packaging requirements of Subpart B of 49 CFR 173, to the requirements of 49 CFR 178 at the specified packing group performance level, to the requirements of special provisions of column 7 of the Hazardous Materials Table in 49 CFR 172, Section .101, and shall be compatible with the material to be packaged as required by 40 CFR 262. The Contractor shall also provide other packaging related materials such as materials used to cushion or fill voids in overpacked containers, etc. Sorbent materials shall not be capable of

reacting dangerously with, being decomposed by, or being ignited by the hazardous materials being packaged. Additionally, sorbents used to treat free liquids to be disposed of in landfills shall be non-biodegradable as specified in 40 CFR 264, Section .314.

2.1.2 Markings

The Contractor shall provide markings for each hazardous material/waste package, freight container, and transport vehicle consistent with the requirements of 49 CFR 172, Subpart D and 40 CFR 262, Section .32 (for hazardous waste), 40 CFR 761, Section .45 (for PCBs), 40 CFR 61, Section .149(d) (for asbestos). Markings must be capable of withstanding, without deterioration or substantial color change, a 180 day exposure to conditions reasonably expected to be encountered during container storage and transportation.

2.1.3 Labeling

The Contractor shall provide primary and subsidiary labels for hazardous materials/wastes consistent with the requirements in the Hazardous Materials Table in 49 CFR 172, Section .101, Column 6. Labels shall meet design specifications required by 49 CFR 172, Subpart E including size, shape, color, printing, and symbol requirements. Labels shall be durable and weather resistant and capable of withstanding, without deterioration or substantial color change, a 180 day exposure to conditions reasonably expected to be encountered during container storage and transportation.

2.1.4 Placards

For each off-site shipment of hazardous material/waste, the Contractor shall provide primary and subsidiary placards consistent with the requirements of 49 CFR 172, Subpart F. Placards shall be provided for each side and each end of bulk packaging, freight containers, transport vehicles, and rail cars requiring such placarding. Placards may be plastic, metal, or other material capable of withstanding, without deterioration, a 30 day exposure to open weather conditions and shall meet design requirements specified in 49 CFR 172, Subpart F.

2.1.5 Spill Response Materials

The Contractor shall provide spill response materials including, but not limited to, containers, adsorbent, shovels, and personal protective equipment. Spill response materials shall be available at all times in which hazardous materials/wastes are being handled or transported. Spill response materials shall be compatible with the type of material being handled.

2.2 EQUIPMENT AND TOOLS

The Contractor shall provide miscellaneous equipment and tools necessary to handle hazardous materials and hazardous wastes in a safe and environmentally sound manner.

PART 3 EXECUTION

3.1 ON-SITE HAZARDOUS WASTE MANAGEMENT

These paragraphs apply to Government owned waste only. Contractors are prohibited by 10 U.S.C. 2692 from storing contractor owned waste on site for any length of time. The identification, accumulation, transportation, and disposal of hazardous waste are the responsibility of the contractor and must be coordinated with the Solid Waste Management Branch. Before accumulating hazardous waste, the contractor must contact the Solid Waste Management Branch to approve a location to accumulate the waste. The Contractor shall be responsible for ensuring compliance with all Federal, state, and local hazardous waste laws and regulations and shall verify those requirements when preparing reports, waste shipment records, hazardous waste manifests, or other documents. The Contractor shall identify hazardous wastes using criteria set forth in 40 CFR 261 or all applicable state and local laws, regulations, and ordinances. When accumulating hazardous waste on-site, the Contractor shall comply with generator requirements in 40 CFR 262 and any applicable state or local law or regulations. On-site accumulation times shall be restricted to applicable time frames referenced in 40 CFR 262, Section .34 and any applicable state or local law or regulation. Accumulation start dates shall commence when waste is first generated (i.e. containerized or otherwise collected for discard). The Contractor shall only use containers in good condition and compatible with the waste to be stored. The Contractor shall be responsible for ensuring containers are closed except when adding or removing waste. The Contractor shall be responsible for immediately marking all hazardous waste containers with the words "hazardous waste" and other information required by 40 CFR 262, Section .32 and any applicable state or local law or regulation] as soon as the waste is containerized. An additional marking shall be placed on containers of "unknowns" designating the date sampled, and the suspected hazard. The Contractor shall be responsible for inspecting containers for signs of deterioration and shall be responsible for responding to any spills or leaks. The contractor shall perform weekly inspections of accumulated hazardous waste. The contractor shall use forms supplied by the Solid Waste Management Branch and forward the forms to the Solid Waste management Branch each Week.

3.1.1 Hazardous Waste Classification

The Contractor, in consultation with the Contracting Officer, shall identify all waste codes applicable to each hazardous waste stream based on requirements in 40 CFR 261 or any applicable state or local law or regulation. The Contractor shall also identify all applicable treatment standards in 40 CFR 268 and state land disposal restrictions and shall make a determination as to whether or not the waste meets or exceeds the standards. Waste profiles, analyses, classification and treatment standards information shall be submitted to Contracting Officer for review and approval.

3.1.2 Management Plan

The Contractor shall prepare a plan detailing the manner in which hazardous wastes shall be managed and describing the types and volumes of hazardous

wastes anticipated to be managed as well as the management practices to be utilized. The plan shall identify the method to be used to ensure accurate piece counts and/or weights of shipments; shall identify waste minimization methods; shall propose facilities to be utilized for treatment, storage, and/or disposal; shall identify areas on-site where hazardous wastes are to be handled; shall identify whether transfer facilities are to be utilized; and if so, how the wastes will be tracked to ultimate disposal. The Hazardous Waste Management Plan shall include procedures for notifying with the Solid Waste Management Branch before accumulating hazardous waste and coordinating transportation of hazardous waste with the Solid Waste Management Branch.

3.2 OFF-SITE HAZARDOUS WASTE MANAGEMENT

The Contractor shall use RCRA Subtitle C permitted facilities which meet the requirements of 40 CFR 264 or facilities operating under interim status which meet the requirements of 40 CFR 265. Off-site treatment, storage, and/or disposal facilities with significant RCRA violations or compliance problems (such as facilities known to be releasing hazardous constituents into ground water, surface water, soil, or air) shall not be used.

3.2.1 Description of TSD Facility and Transporter

The Contractor shall provide the Contracting Officer with EPA ID numbers, names, locations, and telephone numbers of TSD facilities and transporters. This information shall be contained in the Hazardous Waste Management Plan for approval prior to waste disposal.

3.2.2 Status of the Facility

Facilities receiving hazardous waste must be permitted in accordance with 40 CFR 270 or operating under interim status in accordance with 40 CFR 265 requirements or must be permitted by an authorized state program. Additionally, prior to using a TSD Facility, the Contractor shall contact the EPA Regional Off-site Coordinator specified in 40 CFR 300, Section .440, to determine the facility's status and document all information necessary to satisfy the requirements of the EPA Off-Site policy and furnish this information to the Contracting Officer.

3.2.3 Packagings Certification

Prior to shipment of any hazardous material off-site, the Contractor's Transportation and Disposal Coordinator (TDC) shall provide written certification to the Contracting Officer that hazardous materials have been properly packaged, labeled, and marked in accordance with Department of Transportation and EPA requirements.

3.2.4 Transportation

Transportation of hazardous waste must be coordinated with the Solid Waste Management Branch. The contractor is responsible for completing hazardous waste manifests. Only authorized personnel from the Solid Waste Management Branch will sign manifests. Contractor will use the USMA EPA identification number on the manifest and the following generator address:

United States Military Academy, Directorate of Housing and Public Works MAEN-EV-H, 667A Ruger Road, West Point, NY 10996-1592.

The Contractor shall use manifests for transporting hazardous wastes as required by 40 CFR 263 or any applicable state or local law or regulation. Transportation shall comply with all requirements in the Department of Transportation referenced regulations in the 49 CFR series. The Contractor shall acquire manifests in accordance with the hierarchy established in 40 CFR 262, Section .21. The Contractor shall prepare hazardous waste manifests for each shipment of hazardous waste shipped off-site. Manifests shall be completed using instructions in 40 CFR 262, Subpart B and any applicable state or local law or regulation. Manifests and waste profiles shall be submitted to Contracting Officer for review and approval. The Contractor shall prepare land disposal restriction notifications as required by 40 CFR 268 or any applicable state or local law or regulation for each shipment of hazardous waste. Notifications shall be submitted with the manifest to the Contracting Officer for review and approval.

3.2.5 Treatment and Disposal of Hazardous Wastes

The hazardous waste shall be transported to an approved hazardous waste treatment, storage, or disposal facility within 14 days of the accumulation start date on each container. The Contractor shall ship hazardous wastes only to facilities which are properly permitted to accept the hazardous waste or operating under interim status. The Contractor shall ensure wastes are treated to meet land disposal treatment standards in 40 CFR 268 prior to land disposal. The Contractor shall propose TSD facilities via submission of the Hazardous Waste Management Plan, subject to the approval of the Contracting Officer.

3.3 HAZARDOUS MATERIALS MANAGEMENT

The Contractor, in consultation with the Contracting Officer, shall evaluate prior to shipment of any material off-site whether the material is regulated as a hazardous waste in addition to being regulated as a hazardous material; this shall be done for the purpose of determining proper shipping descriptions, marking requirements, etc., as described below.

3.3.1 Identification of Proper Shipping Names

The Contractor shall use 49 CFR 172, Section .101 to identify proper shipping names for each hazardous material (including hazardous wastes) to be shipped off-site. Proper shipping names shall be submitted to the Contracting Officer and the Solid Waste Management Branch in the form of draft shipping documents for review and approval.

3.3.2 Packaging, Labeling, and Marking

The Contractor shall package, label, and mark hazardous materials/wastes using the specified materials and in accordance with the referenced authorizations. The Contractor shall mark each container of hazardous waste of 110 gallons or less with the following:

"HAZARDOUS WASTE - Federal Law Prohibits Improper Disposal.
If found, contact the nearest police or public safety authority or the U.S. Environmental Protection Agency.
Generator's name _____
Manifest Document Number _____".

3.3.3 Shipping Documents

The Contractor shall ensure that each shipment of hazardous material sent off-site is accompanied by properly completed shipping documents.

3.3.3.1 PCB Waste Shipment Documents

The Contractor shall prepare hazardous waste manifests for each shipment of PCB waste shipped off-site. Manifests will be completed using instructions in 40 CFR 761, Sections .207 and .208 and all other applicable requirements. Documents shall be submitted to Contracting Officer for review and approval.

3.3.3.2 Asbestos Waste Shipment Documents

The Contractor shall prepare waste shipment records as required by 40 CFR 61 for shipments of asbestos. Waste shipment records shall be submitted to the Contracting Officer for review and approval. Waste shipment records shall be signed by the Contractor.

3.3.3.3 Other Hazardous Material Shipment Documents

The Contractor shall prepare a bill of lading for each shipment of hazardous material which is not accompanied by a hazardous waste manifest or asbestos waste shipment record which fulfills the shipping paper requirements. The bill of lading shall satisfy the requirements of 49 CFR 172, Subpart C, and 40 CFR 279 if shipping used oil and any applicable state or local law or regulation, and shall be submitted to the Contracting Officer for review and approval. For laboratory samples and treatability study samples, the Contractor shall prepare bills of lading and other documentation as necessary to satisfy conditions of the sample exclusions in 40 CFR 261, Section .4(d) and (e) and any applicable state or local law or regulation. Bill of ladings requiring shipper's certifications shall be signed by the Contractor.

3.4 OBTAINING EPA ID NUMBERS

The Contractor shall complete EPA Form 8700-12, Notification of Hazardous Waste Activity, and submit to the Contracting Officer for review and approval. The Contractor shall allow a minimum of 30 days for processing the application and assigning the EPA ID number. Shipment shall be made not earlier than one week after receipt of the EPA ID number.

3.5 SPECIAL REQUIREMENTS FOR ASBESTOS WASTES

If work involves asbestos containing wastes, the Contractor shall manage these wastes.

3.6 WASTE MINIMIZATION

The Contractor shall minimize the generation of hazardous waste to the maximum extent practicable. The Contractor shall take all necessary precautions to avoid mixing clean and contaminated wastes. The Contractor shall identify and evaluate recycling and reclamation options as alternatives to land disposal. Requirements of 40 CFR 266 shall apply to: hazardous wastes recycled in a manner constituting disposal; hazardous waste burned for energy recovery; lead-acid battery recycling; and hazardous wastes with economically recoverable precious metals.

3.7 RECORDKEEPING

The Contractor shall be responsible for maintaining adequate records to support information provided to the Contracting Officer regarding exception reports, annual reports, and biennial reports. The Contractor shall be responsible for maintaining asbestos waste shipment records for a minimum of 3 years from the date of shipment or any longer period required by any applicable law or regulation or any other provision of this contract.

3.8 SPILL RESPONSE

The Contractor shall respond to any spill of hazardous materials or hazardous waste which are in the custody or care of the Contractor pursuant to this contract. Any direction from the Contracting Officer concerning a spill or release shall not be considered a change under the contract. The Contractor shall comply with all applicable requirements of Federal, state, or local laws or regulations regarding any spill incident.

3.9 EMERGENCY CONTACTS

The Contractor shall be responsible for complying with the emergency contact provisions in 49 CFR 172, Section .604. Whenever the Contractor ships hazardous materials, the Contractor shall provide a 24-hr emergency response contact and phone number of a person knowledgeable about the hazardous materials being shipped and who has comprehensive emergency response and incident mitigation information for that material, or has immediate access to a person who possesses such knowledge and information. The phone must be monitored on a 24-hour basis at all times when the hazardous materials are in transportation including during storage incidental to transportation. The Contractor shall ensure that information regarding this emergency contact and phone number are placed on all hazardous materials shipping documents. The Contractor shall designate an emergency coordinator and post the following information at areas in which hazardous wastes are managed:

a. The name of the emergency coordinator.

b. Phone number through which the emergency coordinator can be contacted on a 24 hour basis.

c. The telephone number of the local fire department.

d. The location of fire extinguishers and spill control materials.

Attachment A
SAMPLE OFF-SITE POLICY CERTIFICATION MEMO

Project/Contract #:_____
Waste Stream:_____
Primary TSD Facility, EPA ID # and Location: _____
Alter. TSD Facility, EPA ID # and Location:_____

EPA Region	Primary Contact	Secondary Contact
I	(617) 573-5755	(617) 573-1754
II	(212) 264-9504	(212) 264-2638
III	(215) 597-1857	(215) 597-8338
IV	(404) 347-7603	(404) 347-7603
V	(312) 353-7921	(312) 886-4445
VI	(214) 655-2282	(214) 655-2281
VII	(913) 551-7816	(913) 551-7667
VIII	(303) 293-1823	(303) 293-1506
IX	(415) 744-2129	(415) 744-2114
X	(206) 553-6646	(206) 553-1061

EPA representative contacted: _____
EPA representative phone number: _____
Date contacted: _____

Comment: _____
The above EPA representative was contacted on _____. As of that date the above sites were considered acceptable in accordance with the Off-Site Policy in 40 CFR 300.440.

Signature: _____ Date: _____
Phone number: _____

-- End of Section --

SECTION 02220

DEMOLITION

PART 1 GENERAL

1.1 REFERENCES

The publications listed below form a part of this specification to the extent referenced. The publications are referred to in the text by basic designation only.

ENGINEERING MANUALS (EM)

EM 385-1-1	(1996) U.S. Army Corps of Engineers Safety and Health Requirements Manual

1.2 GENERAL REQUIREMENTS

1.2.1 General Building Demolition

General Building Construction: The work includes demolition of existing building structures, salvaging of identified metallic components, and legal disposal of waste and construction debris. Rubbish and debris shall be removed from Government property daily, unless otherwise directed, to avoid accumulation at the demolition site. Materials that cannot be removed daily shall be stored in areas specified by the Contracting Officer. In the interest of occupational safety and health, the work shall be performed in accordance with EM 385-1-1, Section 23, Demolition, and other applicable Sections. In the interest of conservation, salvage shall be pursued to the maximum extent possible; salvaged items and materials shall be disposed of and recycled as specified.

The project consists of the demolition and removal of selected portions of the existing Arvin Cadet Physical Development Center (Arvin CPDC), also known as building 727, sitework, utilities, abatement of asbestos containing materials, selective abatement of lead based and lead containing paints (where dismantling of steel is required) to permit demolition, removal of PCB containing ballasts, and removal of mercury containing lamps. Demolition and removal of the existing portions of the Arvin CPDC shall include the demolition and removal of the existing construction with non-friable asbestos containing materials in place, lead containing and lead based paints in place. All building debris resulting from the demolition and removal shall be considered Construction and Demolition (C+D) debris and disposed of at an approved category 360 landfill.

1.2.2 Demolition of Asbestos (Non-Friable) and Lead Contaminated Structures

The work includes disposal, testing, and removal of resulting lead-contaminated, lead containing, and non-friable asbestos rubbish and debris. Rubbish and debris shall be removed from Government property

daily, unless otherwise directed, to avoid accumulation at the demolition site. Materials that cannot be removed daily shall be stored in areas specified by the Contracting Officer. In the interest of occupational safety and health, the work shall be performed in accordance with specification Section 02080, 02120 & 02090, EM 385-1-1 (1996) Section 23, Demolition, OSHA 1926, and other applicable regulations and Sections. In the interest of conservation, segregation of metallic salvage items shall be pursued to the maximum extent possible; salvaged items and materials shall be recycled as specified in Paragraph 3.4.1 of this Specification.

A determination of the nature and waste classification of the contaminated building demolition debris must be performed. This process shall be done prior to the actual demolition of the aforementioned structures. The required testing and sampling is termed the Toxicity Characteristic Leachate Procedure (TCLP) test. This test, and the steps to be followed to collect a proper sample is discussed and explained within 29CFR 1926.62, Lead in Construction. It is required that a minimum of ten (10) TCLP samples and associated analyses are to be performed and collected throughout building areas affected during demolition. Location of TCLP test shall be approved by the Contracting Officer.

All components, including, but not limited to, structural and miscellaneous steel, plaster, doors, frames, windows, wood trim, pipe, ductwork, conduit, and the like, located within the scope of work, are coated with paints containing lead and shall be handled accordingly.

TCLP testing shall be for the following three (3) metals: Lead, cadmium, and chromium. No metallic components or structural steel shall be collected or be included in the TCLP sample due to these items being salvaged and recycled.

Any samples that show an elevated TCLP result will result in the re-sampling of that particular area, components, or materials by the Contractor, and all costs associated with the re-sampling and analysis shall be borne by the Contractor.

If repeated sampling continues to result in elevated TCLP sample results, with respect to the metals sampled, the waste may be classified as a HAZARDOUS WASTE. This issue will be discussed between the Contractor, his Designated IH, and the Contracting Officer. The Contractor shall submit documentation to the satisfaction of the Contracting Officer when the waste is not classified hazardous waste.

1.3 SUBMITTALS

Government approval is required for submittals with a "GA" designation; submittals having an "FIO" designation are for information only. Unless otherwise indicated, primary reviewer for these submittals will be the Hazardous Materials Consultant. The following shall be submitted in accordance with Section 01330 SUBMITTAL PROCEDURES:

SD-08 Statements

Work Plan; GA.

Not less than 14 days prior to beginning demolition work, the Contractor shall submit a written Work Plan detailing the procedures proposed for the accomplishment of the work. The procedures shall provide for safe conduct of the work, including procedures and methods to provide necessary supports, lateral bracing and shoring when required, careful removal and disposition of materials specified to be salvaged, protection of property which is to remain undisturbed, protection of the Public, coordination with other work in progress, and timely disconnection of utility services. The procedures shall include a detailed description of the methods and equipment to be used for each operation, and the sequence of operations in accordance with EM 385-1-1. The procedures shall also include a detailed description of the Phasing of the demolition work, and how it relates to overall project phases. The procedures shall include a detailed description of the Dust Control measures.

Written Compliance Plan; GA

As required in 29CFR 1926.62(e)(2), a detailed written Compliance Plan must be submitted a minimum of fourteen (14) days prior to the start of the job. This Compliance Plan includes a description of each activity in which lead may be emitted during general demolition procedures; a description of worksite practices and procedures to be followed to reduce employees exposures to lead; a schedule of personal air monitoring; a list of personnel protective equipment (PPE) to be utilized; and notification schedule of other contractors working on the site.

SD-13 Certificates

Certificates of severance of utility services; and Permits and notices authorizing building demolition; FIO.

This Submittal will be reviewed by the Contracting Officer.

Certificate of Experience; GA

Contractor shall provide Contracting Officer with a notarized copy of each workmen's experience.

1.4 DUST CONTROL

The amount of dust and potential asbestos and lead-containing dust resulting from demolition shall be controlled to prevent its spread to occupied portions of the construction site and to avoid creation of a hazard. Use of water misters or sprayers over the entire area is required to reduce potential asbestos and lead-containing fugitive dust migration and to reduce asbestos and lead emissions and exposures to workers and the surrounding work area. Water will not be permitted when it will result in, or create, hazardous or objectionable conditions such as ice, flooding and pollution, at the discretion of the Contractor's IH and the Contracting Officer or his representative. When water is not permitted, other measures must be utilized to reduce potential asbestos and lead emissions from the demolition work.

Refer to Section 00800, SPECIAL CONTRACT REQUIREMENTS for other Dust Control requirements.

1.5 PROTECTION

1.5.1 Protection of Personnel

During the demolition work the Contractor shall continuously evaluate the condition of the structure being demolished and take immediate action to protect all personnel working in and around the demolition site. No area, section, or component of floors, roofs, walls, columns, pilasters, or other structural element will be allowed to be left standing without sufficient bracing, shoring, or lateral support to prevent collapse or failure while workmen remove debris or perform other work in the immediate area.

1.5.1.1 Personal Air Monitoring

As per 29 CFR 1926.62 and at the initiation of demolition activities that impact lead containing paints, the Contractor shall have personal monitoring performed on a minimum of one (1) worker at each separate task or job description performed during the demolition portion of work. These samples shall be analyzed to determine the workers exposure to lead utilizing an eight-(8) hour Time Weighted Average (TWA). If any samples reveal elevated exposures to lead, above the action level of 30 micrograms/m , work practices and procedures, including upgrading of worker PPE, must be reviewed and implemented. If all personal air samples reveal low lead exposures, current work practices may continue without change, at the discretion of the Contractor's IH. Personal sampling shall be conducted periodically, as set forth in the Contractor's Written Compliance Plan.

When conducting demolition of building components containing Category I non-friable asbestos containing materials, conduct an initial exposure assessment in accordance with 29 CFR 1926.110.

Employers may utilize Background or Historical Data to attest to the fact that said employer has performed work of a similar fashion with similar building components located within it to forego Personal Monitoring. All data shall be submitted no less than 14 days prior to the start of work for review by the Contracting Officer.

1.5.1.2 Biological Monitoring

Biological monitoring of workers is required when exposures to airborne lead exceeds or is expected to exceed the action level of 30 (micrograms/m^3)as discussed in 29 CFR 1926.62 , and specification Section 02090.

1.5.2 Work Area Monitoring

1.5.2.1 Lead in Air Monitoring Requirements

a. All air monitoring and related sample analysis performed in regards to lead shall adhere to 40 CFR 50, Air Quality Standards, Appendices B, G, & J. All other applicable standards are to be followed as well.

b. A minimum of two (2) TSP (total suspended particulate) air sampling units is to be operated around the perimeter of the demolition work area.
c. A minimum of one (1) air sample per unit shall be collected weekly during the entire length of the demolition procedures in which lead contaminated structures are affected.
d. The units shall be placed downwind of the project, as determined by the local weather station, historical data, and daily weather conditions. Units are to be placed a minimum of fifty (50) feet from the boundary of the work area.
e. Samples shall be analyzed as specified in the above referenced regulation and shall follow all clearance criteria. Turnaround times for the samples shall not exceed 48 hours.
f. Elevated airborne levels of lead shall result in additional engineering controls and steps to reduce any further elevated airborne levels of lead.
g. Sample results shall be collected and be kept on-site for the duration of the project.

1.5.2.2 Asbestos in Air Monitoring Requirements

Asbestos in Air Monitoring Requirements during the demolition of building components containing Category I non-friable asbestos containing materials shall be as follows:

a. A minimum of five-(5) air sampling locations distributed randomly along the exterior boundaries of the construction/demolition area, including at least one sample down-wind.
b. A minimum of one (one) air sample shall be collected at each location per day during which demolition procedures are performed.
c. One of the air samples shall be placed in the clean room of the worker decontamination facility.
d. Air samples shall be analyzed by PCM (as specified in Section 02080), and must meet the criteria of <0.1 fibers/cubic centimeter.
e. In situations in which an entire daily set of PCM air samples are termed "unreadable" due to excess debris and particulate loading of the filter media, the Contractor must have a minimum of one (1) sample of that set must be sent for TEM analysis.
f. At no time shall any one sampling location not have air monitoring readings or analyses performed for greater than a three (3) day period.

1.5.3 Worker Training

Workers shall be made knowledgeable about the hazards of lead, routes of entry of lead into the body, health effects, the contents of 29CFR 1926.62, the purposes of engineering controls, the contents of the Contractors' Compliance Plan, and the purpose of air and medical monitoring programs. Training shall also be translated and performed in the bilingual language of the worker.

1.5.4 Protection of Structures

Floors, roofs, walls, columns, pilasters, and other structural components

that are designed and constructed to stand without lateral support or shoring, and are determined to be in stable condition, shall remain standing without additional bracing, shoring, of lateral support until demolished, unless directed otherwise by the Contracting Officer. The Contractor shall ensure that no elements determined to be unstable are left unsupported and shall be responsible for placing and securing bracing, shoring, or lateral supports as may be required as a result of any cutting, removal, or demolition work performed under this contract. The determination of stability is subject to the review and approval of the Contracting Officer.

1.5.5 Protection of Existing Property

Before beginning any demolition work, the Contractor shall survey the site and examine the drawings and specifications to determine the extent of the work. The Contractor shall take necessary precautions to avoid damage to existing items to remain in place, to be reused, or to remain the property of the Government; any damaged items shall be repaired or replaced as approved by the Contracting Officer. The Contractor shall coordinate the work of this section with all other work and shall construct and maintain shoring, bracing, and supports as required. The Contractor shall ensure that structural elements are not overloaded and shall be responsible for increasing structural supports or adding new supports as may be required as a result of any cutting, removal, or demolition work performed under this contract.

1.5.5.1 Adjacent Buildings

Do not interfere with use of adjacent buildings. Maintain free and safe passage. Maintain egress as indicated. Comply with requirements specified under Section 00800, SPECIAL CONTRACT REQUIREMENTS.

a. Prevent movement or settlement of adjacent structures. Provide and place bracing or shoring and be responsible for safety and support of structures. Assume liability for such movement, settlement, damage, or injury. Promptly repair damage at no cost to the Government.

b. In the event of any movement, settlement, damage or injury, cease operations and notify the Contracting Officer immediately. Determine if safety of adjacent structures appears to be endangered. Take precautions to properly support structures and perform remediation. Do not resume operations until safety has been restored and Contracting Officer has been notified.

c. Prevent movement, settlement or collapse of adjacent services, sidewalks, driveways and trees. Assume liability for such movement, settlement, or collapse. Promptly repair damage at no cost to the Government.

d. Provide, erect, and maintain street boardings, sidewalk sheds, barricades, lighting, and guardrails as required to protect the general public, workers, and adjoining property.

1.5.6 Protection From the Weather

The interior of buildings to remain; salvageable materials and equipment shall be protected from the weather at all times as well as from adverse temperature conditions.

1.5.7 Protection of Historically Significant Buildings

The lobby portion of the North Gym (Building Segment B) and the entirety of Building Segment A are historically significant Buildings. The existing materials and finishes are part of the Post record of construction methods and materials as well as part of the historic fabric of the Hudson River Valley.

As such, this record is irreplaceable. Interior and exterior construction and finishes are to be protected from damage. Workmanship shall be performed without damage to materials to be salvaged or to remain.

1.5.8 Protection of Trees

Trees within the project site which might be damaged during demolition, and which are indicated to be left in place, shall be protected by a 6 foot high fence. The fence shall be securely erected a minimum of 5 feet from the trunk of individual trees or follow the outer perimeter of branches or clumps of trees. Any tree designated to remain that is damaged during the work under this contract shall be replaced in kind or as approved by the Contracting Officer.

1.5.9 Environmental Protection

The work shall comply with the requirements of Section 01410 ENVIRONMENT PROTECTION.

1.6 BURNING

The use of burning at the project site for the disposal of refuse and debris will not be permitted, nor will the burning of any surfaces coated with Lead-Containing (LCP) or Lead-Based Paints (LBP) be permitted.

1.7 USE OF EXPLOSIVES

Use of explosives will not be permitted during dismantling of the building structure or any of its components.

1.8 MAINTAINING TRAFFIC

Do not close or obstruct roadways without permits. Conduct operations with minimum interference to public or private roadways.

1.9 QUALIFICATIONS

All operations related to historically significant buildings shall be performed by skilled craftsmen with a minimum of 10 years experience with a minimum of 3 projects of similar size and scope, including the age and

construction systems/materials of the existing buildings.

1.10 VIDEO TAPING

The Contractor shall video tape all existing conditions when exposed during the progress of demolition. The operating VHS tape speed shall be required at "Standard Speed" and a new tape shall be supplied at the beginning of each day when demolition is performed. At the end of each work day, the tape shall be labeled and dated. The following work day, the Contractor shall turn the tape plus one copy over to the Contracting Officer. The quality of video taping shall be equal to the work required in Subsection 00800-64 VIDEO TAPING. If in the opinion of the Contracting Officer Representative the video taping does not meet the quality of Subsection 00800-64, the Contracting Officer may terminate the progress of demolition at no cost or disadvantage to the Government. If the Contracting Officer terminates demolition for the above cause, the Contractor shall not be entitled to any compensation or delay of work. The Contractor shall immediately remedy the video taping work which shall be subject to the approval of the Contracting Officer. The Contractor shall not resume demolition work until permitted by the Contracting Officer.

PART 2 PRODUCTS

2.1 SALVAGING

Materials indicated on the Drawings or designated in the field by the Contracting Officer to be salvaged shall be carefully removed and delivered to the Government as directed by the Contracting Officer, and as required by Section 00800, SPECIAL CONTRACT REQUIREMENTS.

Mechanical and electrical items to be salvaged shall be protected from the weather and from adverse temperature conditions.

Items to be salvaged and delivered to the Government are as follows:

a. Items as indicated in Section 00800, SPECIAL CONTRACT REQUIREMENTS.

Items to be salvaged for re-use include the following:

a. Existing face brick for re-use. Salvaging operations shall include careful cut-out and removal, cleaning, stacking, and storing existing brick for re-use.

b. Existing 3/4 in. Thick Nominal Quarry Floor Tile for Re-Use: Salvage operations shall include carefully saw-cutting and removing quarry tile flooring from locations indicated. See Drawings for additional requirements. Carefully remove all grout and mortar from quarry tile, clean tile, and package, crate and store tile as indicated on Drawings.

c. Existing Light Fixture for Re-Use: Salvage operations shall include carefully removing light fixture from location indicated, including lamps, mounting hardware, internal wiring, fasteners and the like. See Drawings for additional requirements. Carefully

package, crate and store light fixture as indicated on Drawings.

d. Existing Wood Door and Hardware for Re-Use: Salvage operations shall include carefully removing wood door and door hardware from location indicated, including fasteners and the like. See Drawings for additional requirements. Carefully package, crate and store door and hardware as indicated on Drawings.

e. Existing 1-1/2 inch Thick by 11 in. High Dark Green Marble Base for Re-Use: Salvage operations shall include carefully removing marble base from location indicated, including cleaning and removal of all grout from the marble base. See Drawings for additional requirements. Carefully package, crate and store marble base as indicated on Drawings.

PART 3 EXECUTION

3.1 EXISTING STRUCTURES

Existing structures to be removed are indicated on the Drawings.. Interior walls, other than retaining walls and partitions, shall be removed to the top of the concrete slab on ground. All slabs shall be broken up and removed. Sidewalks, curbs, gutters and street light bases shall be removed as indicated. Remove all debris in cavities, chases and voids within structures. Structural steel shall be dismantled in accordance with this specification. All lead-based paint (LBP) and lead-containing paint (LCP) shall be removed from the structural steel, where it is to be cut, in accordance with Section 02090 prior to dismantling.

Structures indicated to be removed shall be completely removed, including foundations, except as follows:

1. Demolish and remove structures to the cut-off elevations indicated on the Drawings.

2. To top of rock where rock is exposed, and as indicated on the Drawings.

Existing floors and slabs remaining below the cut-off elevation shall be broken up and removed.

3.2 UTILITIES

Disconnection of utility services, with related meters and equipment, are specified in Division 02, 15, and 16 Sections. Existing utilities shall be removed as indicated. When utility lines are encountered that are not indicated on the drawings, the Contracting Officer shall be notified prior to further work in that area.

3.3 FILLING

Holes, open basements and other hazardous openings shall be filled in accordance with the applicable Section 02221.

3.4 DISPOSITION OF MATERIAL

Title to material and equipment to be demolished, except Government salvage and historical items, is vested in the Contractor when the building is made available to the Contractor for demolition. The Government will not be responsible for the condition, loss or damage to such property after notice to proceed.

3.4.1 Salvageable Items and Material

The Contractor shall salvage/recycle all lead coated metallic items and material to the maximum extent possible. All metal components coated with Lead-Based Paint (LBP) and Lead-Containing Paint (LCP) shall be segregated and be sent to a metal/steel recycling facility. The facility shall be notified of the type of salvage, by letter, prior to transport. The facility shall be approved by the Government and Contractor's IH.

3.4.1.1 Material Salvaged for the Contractor

Material salvaged for the Contractor shall be stored as approved by the Contractor's IH and shall be removed from Government property within 30 days or before completion of the contract, whichever occurs first. Material salvaged for the Contractor shall not be sold on the site.

3.4.1.2 Items Salvaged for the Government

Salvaged items to remain the property of the Government shall be removed in a manner to prevent damage, and packed or crated to protect the items from damage while in storage or during shipment. Items damaged during removal or storage shall be repaired or replaced to match existing items. Containers shall be properly identified as to contents.

3.4.1.3 Items Salvaged for Reinstallation

Salvage the following items for reinstallation under Section 04200, MASONRY:

1. Brick: Salvage existing brick for reinstallation. Carefully remove brick, neatly stack on pallets and deliver to Contractor for installation by masonry trade.

3.4.1.4 Historical Items

Historical items shall be removed in a manner to prevent damage. The following historical items shall be delivered to the Government for disposition: Corner stones, contents of corner stones, document boxes wherever located on the site, and any other items discussed and agreed to under this Contract.

3.4.1.5 Existing Brick to be Salvaged for Re-Use

The following procedures shall be strictly followed for removing the salvage brick for re-use in the restored walls of the historic building:

a. Saw cut the joints between two bricks with diamond-tipped

saws. The blade of the saw shall be as wide as possible to cut the depth of the brick joint.

b. Brick shall be removed in 2 to 3 foot sections. Special care shall be used during the removal of the sections of the wall where the brick is to be salvaged to prevent unnecessary damage to the brick.

c. Only exterior exposed brick shall be salvaged for re-use.

d. Brick shall be separated by saw-cutting. Multiple saw-cuts may be made to remove as much of the mortar as possible. Brick damaged during saw-cutting shall not be re-used.

e. Loose mortar remaining on the brick shall be removed by hand chisels.

f. Well-bonded mortar shall be removed with a weak solution of diluted hydrochloric acid (HCL). Only HCL shall be used. No stronger acids shall be substituted. Apply a 2% to 5% HCL/water dilution to the mortar with a nylon bristle brush. Allow to dwell five (5) to ten (10) minutes, depending on the thickness of the residue build-up. Immerse brick in clean water to thoroughly rinse. Remove the softened mortar with a hand chisel. Repeat the above procedures until the mortar residue is removed. Do not increase the dwell time. After each application, change the rinse water. Do not rinse multiple brick in the rinse water.

g. Salvaged brick shall be handled with care, placed on wooden pallets and covered with a tarpaulin. Damaged or chipped bricks shall be discarded.

3.4.2 Unsalvageable Material

Concrete, masonry, and other noncombustible material, except concrete permitted to remain in place, shall be disposed of in approved containers prior to disposal off-site. Previously collected and analyzed representative Toxicity Characteristic Leachate Procedure (TCLP) samples collected and analyzed for Total Lead, Cadmium, and Chromium concentrations shall determine this material's final waste classification and disposal end destination. Any TCLP samples with concentrations of the aforementioned metals exceeding the regulatory limits, shall be treated as Hazardous Waste, as specified in Section 02090 and 02120. Any concrete or masonry covered with an asbestos-containing (ACM) tar material shall be handled and disposed of in accordance with Section 02080. All unsalvageable material shall be disposed of legally off-Post

3.5 IN PLACE DEMOLITION AND ACM MATERIALS

The contractor shall use the following work practices when demolishing the buildings, which shall be assumed to contain LBP and non-friable ACM tar vapor barrier, waterproofing membrane and mastic materials.

a. Continuous misting and praying of the work area utilizing fire

hoses. Mist shall consist of amended water at a sufficient flow to prevent any LBP, ACM or fugitive dust from migrating outside the work area. The work area shall be configured so that all water run-off can be collected. A water collection and filtering system consisting of a berm around the entire work area and a filtration system as described in Section 02080 ASBESTOS ABATEMENT SET-UP DETAIL SHEET 23 shall be provided;

b. Isolation of work area in which in-place demolition work is performed and potential for asbestos fiber or LBP dust release is produced. Only licensed asbestos professionals may enter work area;

c. Continual wetting and collection of the ACM and LBP contaminated and containing wastes during the entire in place demolition procedure and waste collection procedures. The material shall be thoroughly wetted with amended water prior~to and during its removal, at all times, and prior to placing in disposal container. Waste shall not be allowed to accumulate. All wastes shall be transported to a lockable, double poly-lined container for disposal;

d. Cutting or abrading of the material shall be prohibited except where such operations are carried out in strict conformance with the requirements for such operations as friable materials per section 02080 ASBESTOS ABATEMENT and per section 02090 LEAD BASED PAINT (LBP) ABATEMENT AND DISPOSAL.

e. Use of other work practices and engineering controls;

Where the feasible engineering and work practices controls described above are not sufficient to reduce employee exposure to or above the PELs, the contractor shall use them to reduce employee exposure to the lowest levels obtainable by these controls and shall supplement them with use of respiratory protection that complies with RESPIRATORY PROTECTION PROGRAM requirements of sections 02080 ASBESTOS ABATEMENT and 02090 LEAD BASED PAINT (LBP) ABATEMENT AND DISPOSAL.

f. Protection and sealing of any and all drains, manholes, and penetrations located within the work area to prevent contamination of these and adjacent areas. Specific attention is directed to protection of adjacent occupied building areas from contamination due to the contractor's operations.

3.6 WORKMANSHIP IN HISTORICALLY SIGNIFICANT BUILDINGS

The contractor shall use extreme care when performing operations related to historically significant buildings. Specific attention is directed to the existing building interiors which include natural limestone veneers, natural limestone mouldings and plaster on masonry. Some of these existing materials have been damaged during the life of the building and are sensitive to environmental change, including temperature, humidity and vibrations. The contractor shall use care to not damage these as well as other existing materials.

The contractor shall prevent removal of any additional materials other than the minimum amount required to safely perform operations. The use of tools, equipment, process materials and handling shall not damage salvage materials, historical materials or construction to remain in place. The contractor shall review with the contracting officer the work plan, including protective measures, tools, equipment, process materials and handling, for each task before the start of any operation. The contractor shall inform the contracting officer of the progress of operations and shall immediately inform the contracting officer of any un-anticipated events.

1. Only qualified, experience technicians shall be permitted to perform work related to any historically significant building.

2. Only hand operated tools shall be used for work on historically significant buildings.

3. Power driven hand tools may be used for work on historically significant buildings, but only upon case by case approval of the contracting officer. Such power tools, if permitted for use, shall not exceed 1 1/2 horsepower and shall be used with extreme care and without affecting materials to remain.

4. Existing surfaces to remain shall be protected by not less than 3/4 inch CDX plywood, with additional protection provided suitable to prevent damage to such surfaces from the contractor's operations to be performed. Such additional protection shall include additional padding materials, impact/ abrasion barriers, air and fluid tight membranes, vacuum removal system, air filtration systems and the like.

5. Where attachment is required to existing construction, such attachments shall be made into existing joints between materials or items. Such existing joints include mortar joints between units of stone or masonry, grout joints between tiles and the like. Fasteners shall be sized such that cut, sawed, routed, drilled, bored or the like holes do not exceed the affected existing joint width. DO NOT DRILL OR OTHERWISE DAMAGE THE FACE OF ANY EXISTING MATERIAL WITHOUT PRIOR WRITTEN APPROVAL OF THE CONTRACTING OFFICER.

6. Visible mortar samples have been retained by the Government for color and composition testing by the Contractor. The sample will be used for color and composition matching the mortar for re-installation of the stone previously salvaged by the Government.

7. Where existing materials to remain or to be salvaged are damaged by the contractor operations, the contractor shall replace such materials as directed by the contracting officer without additional cost to the government to the satisfaction of the Contracting Officer.

3.7 CLEAN UP

Debris and rubbish shall be removed from basement and similar excavations. Debris shall be removed and transported in a manner that prevents spillage on streets or adjacent areas. Local regulations regarding hauling and disposal shall apply.

3.8 PAVEMENTS

Existing pavements designated for removal shall be saw cut and removed in accordance with the details shown on the drawings and to the limits and depths indicated on the drawings.

-- End of Section --

SECTION 02221

EXCAVATION, FILLING AND BACKFILLING FOR BUILDINGS

PART 1 GENERAL

1.1 REFERENCES

The publications listed below form a part of this specification to the extent referenced. The publications are referred to in the text by basic designation only.

AMERICAN SOCIETY FOR TESTING AND MATERIALS (ASTM)

ASTM D 1556	(1990) Density and Unit Weight of Soil in Place by the Sand-Cone Method
ASTM D 1557	(1991) Laboratory Compaction Characteristics of Soil Using Modified Effort (56,000 ft-lbf/cu. ft. (2,700 kN-m/cu.m.))
ASTM D 2216	(1992) Laboratory Determination of Water (Moisture) Content of Soil, and Rock
ASTM D 2922	(1991) Density of Soil and Soil-Aggregate in Place by Nuclear Methods (Shallow Depth)
ASTM D 3017	(1988; R 1993) Water Content of Soil and Rock in Place by Nuclear Methods (Shallow Depth)

Occupational Safety and Health Administration (OSHA)

OSHA Regulations	Standards (29 CFR

1.2 DEFINITIONS

1.2.1 Degree of Compaction

Degree of compaction required is expressed as a percentage of the maximum density obtained by the test procedure presented in ASTM D 1557abbreviated hereinafter as percent laboratory maximum density.

1.3 SUBMITTALS

Government approval is required for submittals with a "GA" designation; submittals having an "FIO" designation are for information only. Unless otherwise indicated, primary reviewer for these submittals will be the Contracting Officer. The following shall be submitted in accordance with Section 01330 SUBMITTAL PROCEDURES:

SD-09 Reports

Field Density Tests; FIO. Testing of Backfill Materials; FIO.

Copies of all laboratory and field test reports within 24 hours of the completion of the test.

1.4 MEASUREMENT AND PAYMENT

1.4.1 Rock Excavation

Rock excavation shall be measured as specified in Section 02222, ROCK EXCAVATION, and paid for in accordance with Section 01025, MEASUREMENT AND PAYMENT.

1.4.2 Earth Excavation

If any part of the excavation is carried beyond the depth directed by the Contracting Officer, and the dimensions indicated on the Drawings, or called out for in the Specifications, the Contractor at his own expense, shall furnish and install Structural Fill (except where lean concrete is specified or called for on the Drawings) as directed by the Contracting Officer up to the required level and/or dimensions. Structural Fill shall not be used under footings except where specifically called for on the Drawings. See Specification Section 03300, CAST-IN-PLACE CONCRETE for requirements for lean concrete.

Excavation, removal, and/or disposal of unsuitable materials below the grades called for on the Drawings and specified herein, shall be paid for in accordance with Section 01025, MEASUREMENT AND PAYMENT after removal of such materials has been authorized by the Contracting Officer. The quantities of excavation, removal, disposal and backfilling involving an adjustment of the Contract Price shall be subject to measurement verification and approval by the Contracting Officer, prior to removal of such materials.

PART 2 PRODUCTS

2.1 MATERIALS

2.1.1 Pervious Backfill Material

Material shall be Crushed Gravel conforming to NYSDOT designation 703-0202 designation Size 2.

2.1.2 Satisfactory and Unsatisfactory Materials

Satisfactory and unsatisfactory materials shall be as defined in Section 02316 EXCAVATION, TRENCHING AND BACKFILLING FOR UTILITIES SYSTEMS.

2.2 STRUCTURAL FILL

Structural Fill shall consist of clean, crushed, nonporous rock, crushed

gravel, or uncrushed gravel. Structural Fill shall conform with following gradation:

US Sieve Siz	Total % Passing by Weight
4"	100%
1"	60-100%
#4	25-85%
#20	10-55%
#40	5-35%
#200	0-8%

PART 3 EXECUTION

3.1 CLEARING AND GRUBBING

Clearing and grubbing is specified in Section 02230 CLEARING AND GRUBBING. Stumps, logs, roots, and other organic matter shall be completely removed and the resulting depressions shall be filled with Structural Fill unless indicated otherwise, placed and compacted in accordance with paragraph FILLING AND BACKFILLING. Materials removed shall be disposed of outside the limits of Government-controlled property at the Contractor's responsibility.

3.2 TOPSOIL

Topsoil shall be disposed of as unsatisfactory material.

3.3 EXCAVATION

Excavation shall conform to the dimensions and elevations indicated for each building, structure, caisson cap, and footing except as specified hereinafter, and shall include trenching for utility and foundation drainage systems to a point 5 feet beyond the building line of each building and structure. Excavation shall extend a sufficient distance from walls and footings to allow for placing and removal of forms. Excavations below indicated depths will not be permitted except to remove unsatisfactory material. Unsatisfactory material encountered below the grades shown shall be removed as directed by the Contracting Officer and replaced with Structural Fill unless indicated otherwise, except that concrete footings shall be increased in depth or lean concrete provided where called for on the Drawings. Payment therefor will be made in conformance with Section 01025, MEASUREMENT AND PAYMENT. Satisfactory material removed below the depths indicated without specific direction of the Contracting Officer shall be replaced at no additional cost to the Government to the indicated excavation grade with Structural Fill unless indicated otherwise, except that concrete footings shall be increased in depth, or lean concrete provided where called for on the Drawings, to the bottom of the overdepth excavations and over-break in rock excavation. Fill Materials shall be placed and compacted as specified in paragraph FILLING AND BACKFILLING. Determination of elevations and measurements of approved overdepth excavation of unsatisfactory material below grades indicated shall be done under the direction of the Contracting Officer.

3.4 DRAINAGE AND DEWATERING

3.4.1 Drainage

Surface water shall be directed away from excavation and construction sites so as to prevent erosion and undermining of foundations. Diversion ditches, dikes and grading shall be provided and maintained as necessary during construction. Excavated slopes and backfill surfaces shall be protected to prevent erosion and sloughing. Excavation shall be performed so that the site and the area immediately surrounding the site and affecting operations at the site shall be continually and effectively drained.

3.4.2 Dewatering

Groundwater flowing toward or into excavations shall be controlled to prevent sloughing of excavation slopes and walls, boils, uplift and heave in the excavation and to eliminate interference with orderly progress of construction. French drains, sumps, ditches or trenches will not be permitted within 3 feet of the foundation of any structure, except with specific written approval, and after specific contractual provisions for restoration of the foundation area have been made. Control measures shall be taken by the time the excavation reaches the water level in order to maintain the integrity of the in situ material.

3.5 SHORING

Shoring, including sheet piling, shall be furnished and installed as required in accordance with OSHA Regulations to protect workmen, and to protect banks, adjacent paving, structures, and utilities from damage. Shoring, bracing, and sheeting shall be removed as excavations are backfilled, in a manner to prevent caving.

3.6 CLASSIFICATION OF EXCAVATION

Excavation will be unclassified regardless of the nature of material encountered. Rock excavation shall be as defined under Section 02222 ROCK EXCAVATION. Hard and compact materials such as cemented gravel, glacial till, and relatively soft or disintegrated rock that can be removed without continuous and systematic drilling and blasting will not be considered as rock excavation. Rock excavation will not be considered as such because of intermittent drilling and blasting that is performed merely to increase production. Excavation of the material claimed as rock shall not be performed until the material has been cross sectioned by the Contractor and approved by the Contracting Officer. Common excavation shall consist of all excavation not classified as rock excavation.

3.7 BLASTING

Blasting will be permitted. Refer to Section 02222 ROCK EXCAVATION.

3.8 UTILITY AND DRAIN TRENCHES

Excavation and backfilling for utilities shall conform to Section 02316,

EXCAVATION, TRENCHING AND BACKFILLING FOR UTILITIES SYSTEMS.

3.9 FOUNDATION DRAIN TRENCHING

Excavation and backfilling for foundation drain trenches shall conform to the requirements of NYDOT Section 200 Earthwork.

3.10 COMMON FILL/BORROW

Material shall be as specified in Section 02316, EXCAVATION, TRENCHING AND BACKFILLING FOR UTILITIES SYSTEMS..

3.11 EXCAVATED MATERIALS

Excavated material shall be disposed of outside the limits of Government-controlled property at the Contractor's expense and responsibility.

3.12 FINAL GRADE OF SURFACES TO SUPPORT CONCRETE

Excavation to final grade shall not be made until just before concrete is to be placed. Only excavation methods that will leave the foundation rock in a solid and unshattered condition shall be used. Footings and caissons shall all bear on rock, except where soil bearing is specifically called for on the Drawings. Approximately level surfaces shall be roughened, and sloped surfaces shall be cut into rough steps or benches to provide a satisfactory bond. Shales shall be protected from slaking or other erosion resulting from ponding or flow of water. Rock foundation bearing surfaces shall be leveled to a slope less than 1 vertical to 12 horizontal.

3.13 SUBGRADE PREPARATION

Unsatisfactory material in surfaces to receive fill or in excavated areas shall be removed and replaced with Structural Fill. The surface shall be scarified to a depth of 6 inches before the fill is started. Sloped surfaces steeper than 1 vertical to 4 horizontal shall be plowed, stepped, benched, or broken up so that the fill material will bond with the existing material. When subgrades are less than the specified density, the ground surface shall be broken up to a minimum depth of 6 inches, pulverized, and compacted to the specified density. When the subgrade is part fill and part excavation or natural ground, the excavated or natural ground portion shall be scarified to a depth of 12 inches and compacted as specified for the adjacent fill. Material shall not be placed on surfaces that are muddy, frozen, or contain frost. Compaction shall be accomplished by sheepsfoot rollers, pneumatic-tired rollers, steel-wheeled rollers, or other approved equipment well suited to the soil and working conditions of area being compacted. Material shall be moistened or aerated as necessary to provide the moisture content that will readily facilitate obtaining the specified compaction with the equipment used. Minimum subgrade density shall be as specified in paragraph FILLING AND BACKFILLING.

3.14 FILLING AND BACKFILLING

Unless indicated otherwise, Structural Fill shall be used in bringing fills

and backfills to the lines and grades indicated and for replacing unsatisfactory materials. Fill/Backfill materials shall be placed in horizontal layers not exceeding 8 inches in loose thickness, or 6 inches when hand-operated compactors are used. After placing, each layer shall be plowed, disked, or otherwise broken up, moistened or aerated as necessary, thoroughly mixed and compacted as specified. Backfilling shall not begin until construction below finish grade has been approved, underground utilities systems have been inspected, tested and approved, forms removed, and the excavation cleaned of trash and debris. Backfill shall be brought to indicated finish grade. Backfill shall not be placed in wet or frozen areas. Where pipe is coated or wrapped for protection against corrosion, the backfill material up to an elevation 2 feet above sewer lines and 1 foot above other utility lines shall be free from stones larger than 1 inch in any dimension. Heavy equipment for spreading and compacting backfill shall not be operated closer to foundation or retaining walls than a distance equal to the height of backfill above the top of footing; the area remaining shall be compacted in layers not more than 4 inches in compacted thickness with power-driven hand tampers suitable for the material being compacted. Backfill shall be placed carefully around pipes to avoid damage to coatings, or wrappings. Backfill shall not be placed against foundation walls prior to 7 days after completion of the walls. As far as practicable, backfill shall be brought up evenly on each side of the wall and sloped to drain away from the wall. Each layer of fill and backfill shall be compacted to not less than the percentage of maximum density specified below:

	Percent Laboratory maximum density Cohesionless material
Fill, embankment, and backfill	
Under structures, building slabs, steps, paved areas, around footings, and in trenches (except not under footings unless specifically called for on the Foundation Drawings)	95
Under sidewalks	95
Under grassed areas	90
Nonfrost susceptible materials	95
Subgrade	
Under building slabs, steps, and paved	

	Percent Laboratory maximum density
	Cohesionless material
areas, top 12 inches	95
Under sidewalks, top 6 inches	95

Approved compacted subgrades that are disturbed by the Contractor's operations or adverse weather shall be scarified and compacted as specified herein before to the required density prior to further construction thereon. Recompaction over underground utilities and heating lines shall be by hand tamping.

3.15 TESTING

Testing shall be the responsibility of the Contractor and shall be performed at no additional cost to the Government. Testing shall be performed by an approved commercial testing laboratory or may be performed by the Contractor subject to approval by the Contracting Officer. Field in-place density shall be determined in accordance with ASTM D 1556, or ASTM D 2922. When ASTM D 2922 is used, the calibration curves shall be checked and adjusted if necessary by the procedure described in ASTM D 2922, paragraph ADJUSTING CALIBRATION CURVE. ASTM D 2922results in a wet unit weight of soil and when using this method ASTM D 3017 shall be used to determine the moisture content of the soil. The calibration curves furnished with the moisture gauges shall also be checked along with density calibration checks as described in ASTM D 3017. The calibration checks of both the density and moisture gauges shall be made at the beginning of a job on each different type of material encountered and at intervals as directed by the Contracting Officer. The following number of tests, if performed at the appropriate time, shall be the minimum acceptable for each type operation.

3.15.1 In-Place Densities

3.15.1.1 In-Place Density of Subgrades

One test per 1000 square foot or fraction thereof.

3.15.1.2 In-Place Density of Fills and Backfills

One test per 1600 square foot or fraction thereof of each lift for fill or backfill areas compacted by other than hand or hand-operated machines. The density for each lift of fill or backfill materials for trenches, pits, building perimeters or other structures or areas less than 10 feet in width, which are compacted with hand or hand-operated machines shall be tested as follows: One test per each area less than 1000 square feet, or one test for each 100 linear foot of long narrow fills 1000 feet or more in length. If ASTM D 2922 is used, in-place densities shall be checked by

ASTM D 1556 as follows: One check per lift for each 100 linear feet of long narrow fills, and a minimum of 1 check per lift for other fill and backfill areas.

3.15.2 Moisture Content

In the stockpile, a minimum of two tests per day per type of material or source of materials being placed is required during stable weather conditions. During unstable weather, tests shall be made as dictated by local conditions and approved moisture content shall be tested in accordance with ASTM D 2216.

3.15.3 Optimum Moisture and Laboratory Maximum Density

Tests shall be made for each type material to determine the optimum moisture and laboratory maximum density values. One representative test per 1000 square feet of fill and backfill, or when any change in material occurs which may affect the optimum moisture content or laboratory maximum density will be made.

3.16 STRUCTURAL FILL

Structural Fill under concrete floor and area-way slabs on grade shall be placed directly on the subgrade and shall be compacted with a minimum of two passes of a hand-operated plate-type vibratory compactor.

3.17 GRADING

Areas within 5 feet outside of each building and structure line shall be constructed true-to-grade, shaped to drain, and shall be maintained free of trash and debris until final inspection has been completed and the work has been accepted.

3.18 SPREADING TOPSOIL

Areas outside the building lines from which topsoil has been removed shall be topsoiled if no other material is called out on Plans. The surface shall be free of materials that would hinder planting or maintenance operations. The subgrade shall be pulverized to a depth of 2 inches by disking or plowing for the bonding of topsoil with the subsoil. Topsoil shall then be uniformly spread, graded, and compacted to the thickness, elevations, slopes shown, and left free of surface irregularities. Topsoil shall be compacted by one pass of a cultipacker, roller, or other approved equipment weighing 100 to 160 pounds per linear foot of roller. Topsoil shall not be placed when the subgrade is frozen, excessively wet, extremely dry, or in a condition otherwise detrimental to seeding, planting, or proper grading.

3.19 PROTECTION

Settlement or washing that occurs in graded, topsoiled, or backfilled areas prior to acceptance of the work shall be repaired and grades reestablished to the required elevations and slopes.

-- End of Section --

SECTION 02222

ROCK EXCAVATION

PART 1 GENERAL

1.1 REFERENCES

The publications listed below form a part of this specification to the extent referenced. The publications are referred to in the text by basic designation only.

CODE OF FEDERAL REGULATIONS (CFR)

29 CFR 1926	Safety and Health Regulations for Constructio

1.2 EXAMINATION OF SITE AND DOCUMENTS

It is hereby understood that the Contractor has carefully examined the documents for conditions affecting work under this Section. No claim for additional costs will be allowed because of lack of full knowledge of conditions as indicated in the Contract Documents. Plans, surveys, measurements, and dimensions under which the work is to be performed are believed to be correct, but the Contractor shall have examined them for himself during the bidding period, as no allowance will be made for any errors or inaccuracies that may be found except as otherwise provided herein.

1.3 SUBMITTALS

Government approval is required for submittals with a "GA" designation; submittals having an "FIO" designation are for information only. Unless otherwise indicated, primary reviewer for these submittals will be the Geotechnical Engineering Consultant. The following shall be submitted in accordance with Section 01330 SUBMITTAL PROCEDURES:

SD-09 Report

Blasting Plan, GA

Submit a Blasting Plan no less than 4 weeks prior to starting any blasting work. The plan shall describe proposed methods and sequence of excavation, including blasting procedures, together with all pertinent data to show compliance with these specifications. The Contractor shall not start any rock excavation work until he has received notification from the Contracting Officer that the proposed plan is acceptable.

SD-13 Certificate

Certificate of Blaster's Experience; GA

Contractor shall provide Contracting Officer with a notarized copy of the blaster's experience and State certificates at least 5 days prior to the blaster's starting work on the site.

1.4 SUBSURFACE CONDITIONS

At locations identified on the Drawings, soil borings have been made by a qualified Contractor prior to the Contract.

1. All boring data obtained is included in the Appendix of this Specification. This data is representative of the ground conditions at each borehole location and do not necessarily apply elsewhere.

2. The investigations were made in order to provide data for design purposes and the results are referenced solely as information to bidders. Interpretation of the data for purposes of construction is the responsibility of the Contractor.

1.5 REQUIREMENTS OF REGULATORY AGENCIES

Work shall conform to the Drawings and Specifications and shall comply with applicable codes and regulations.

Comply with all rules, regulations, laws and ordinances of the United States Military Academy, the State of New York, and all other authorities having jurisdiction. All labor, materials, equipment and services necessary to make the work comply with such requirements, shall be provided without additional cost to the Government.

The Contractor shall not close any street, sidewalk or passageway except as indicated by the Contract Documents. the Contractor shall so conduct his operations as to interfere as little as possible with the use ordinarily made of roads, driveways, sidewalks or other facilities near enough to the work to be affected thereby.

The Contractor shall procure and pay for- all permits and licenses required for the complete work specified herein and shown on the Drawings at no additional cost to the Government.

1.6 LAYOUT AND GRADE

All lines and grade work not presently established at the site shall be laid out by the Contractor in accordance with the Drawings and Specifications. Maintain all established bounds and bench marks and replace as directed any which are destroyed or disturbed. Any deviations from the locations and elevations indicated on the Contract Drawings shall be transmitted to the Contracting Officer immediately. Contractor shall establish three additional temporary Bench Marks for each Bench Mark.

1.7 DISPOSITION OF EXISTING UTILITIES

Active utilities existing on the site shall be carefully protected from damage and relocated or removed as required by the work. When an active utility line is exposed during construction, its location and elevation shall be plotted on the record drawings and both the Contracting Officer and Utility Owner notified in writing within 24 hours.

The Contracting Officer shall be notified when inactive or abandoned utilities are encountered during construction operations. The Contracting Officer will dictate which utilities are to be removed or left in place. The location of such utilities shall be noted on the record drawings and reported in writing to the Contracting Officer.

1.8 PROTECTION

All blasting, storage and use of explosives shall be in strict compliance with requirements of the Safety and Health Standards for Construction, U.S. Department of Labor (OSHA), 29 CFR 1926 and with the latest applicable federal and state regulations. The Contractor shall employ experienced supervisors and workmen for the handling, storage, loading and fixing of explosives conforming to the requirements of Article 1.13 BLASTER QUALIFICATIONS.

Blasts shall be properly covered and every precaution taken to insure the safety of persons and property Contractor shall be responsible for all damages caused by blasting and shall immediately notify the Owner of any claims of damage from blasting at the time of claim.

1.9 Rock Excavation

Rock excavation for purposes of its removal, is granite-like bedrock and original ledge material which can not be broken and removed by power excavation equipment and requires the systematic use of drills or explosives and boulders over two cubic yards in open excavation and over one cubic yard in trenches that are removed by power excavating equipment without the use of drills or explosives. Refer to Section 02221 for classification of excavation.

1.10 DISPOSAL

All excavated materials are considered as not suitable for reuse as backfill, including blasted rock, andshall be legally disposed of off-post at no additional cost. See additional requirements specified in Section 00800 SPECIAL CONTRACT REQUIREMENTS.

1.11 MEASUREMENT AND PAYMENT

If any part of the excavation is carried beyond the depth directed by the Contracting Officer and the dimensions indicated on the Drawings or called for in the Specifications, the Contractor' at his own expense, shall furnish and install lean concrete as directed by the Contracting Officer up to the required level and or dimensions. Prior to conducting the Pre-Excavation Quantity Survey, remove all non-rock overburden and clean the rock surfaces to be excavated.

Excavation, removal, and/or disposal of additional materials below the grades called for on the Drawings and specified herein, shall be paid for in accordance with the "Price Schedule" after removal of such materials has been authorized by the Contracting Officer. The quantities of excavation, removal, disposal and backfilling shall be subject to measurement verification and approval by the Contracting Officer, prior to removal of such materials.

1.11.1 Payment Lines

The payment lines shall be used for purposes of Contract Price adjustment to determine changes in volume of materials to be excavated, removed and backfilled. Payment lines are as described on attached sketches ASK-101 and ASK-102 appended to the end of this Section.

1.11.1.1 Trench Rock Excavation for Pipes, Utility Structures and Ducts

See Sketch ASK-101 and ASK-102 appended to the end of this Section.

1.11.1.2 Horizontal and Vertical Surface Areas

Horizontal surface rock excavation shall be defined as rock excavation on a surface with less than 12 on 12 slope from horizontal. Vertical surface rock excavation shall be defined as rock excavation on a surface with equal to or greater than 12 on 12 slope from horizontal. Slope shall be measured as the average slope across the excavation area. Horizontal and vertical surface excavation payment lines shall be as per Sketch ASK-101 and ASK-102 as appended to this Section. All excavations, whether or not related to a utility structure, pipe or duct, the payment line shall conform to the Sketch ASK-101 and ASK-102 for vertical cut configuration and shall be carried to the elevations indicated.

1.11.2 Payment

Payment for removal of all material shall be included in the contract price as indicated the "Price Schedule" and in Section 01025, MEASUREMENT AND PAYMENT. This includes excavation of all materials necessary to construct the indicated new construction including perimeter walls, wall footings, perimeter and underslab drainage materials and utility trenches as well as all site grading and improvements to the grades indicated on the drawings and specified herein.

1.12 FIELD QUALITY CONTROL

The Contractor shall engage a Licensed Professional Engineer with 4 years experience in foundation engineering to monitor excavation. Engineer shall be on-site at least every 5th day of excavation work.

1.13 BLASTER QUALIFICATIONS

The Blaster shall have a minimum of 15 years experience in rock excavation involving the use of explosives in controlled techniques with a minimum of 5 projects of similar size and scope, including proximity to adjacent buildings and property to remain. The Blaster shall hold a current and

valid license or certificate as required by the applicable public agencies of jurisdiction to perform blasting operations. The Blaster shall be present and in direct control of operations at the site during all rock excavation operations.

PART 2 PRODUCTS

(Not Used)

PART 3 EXECUTION

3.1 ROCK EXCAVATION

Submit to the Contracting Officer a blasting plan no less than 4 weeks prior to the commencement of rock excavation activities at the site. The plan shall describe proposed methods and sequence of excavation, including blasting procedures, together with all pertinent data to show compliance with these specifications. The Contractor shall not start any rock excavation work until he has received notification from the Contracting Officer that the proposed plan is acceptable.

3.1.1 Line Drilling

The 1 horizontal to 12 vertical rock cut faces along the perimeter of the excavated area shall be line drilled utilizing guide bits and guide couplings to control the predrilled holes. Line drilling holes shall be 3 inches in diameter spaced not more than 6 inches on center. The line drilling shall be completed a minimum of 50 feet ahead of all excavation activities. The maximum depth of line drilling shall be 20 feet per bench. Cuts in excess of 20 feet in height shall be drilled in two passes with each pass not exceeding 20 feet in depth.

Rock excavation shall be performed in lifts. The height of each lift shall be indicated on the blasting plan but shall not exceed 10 feet in height.

After each lift of rock is excavated, allow sufficient time for the Contracting Officer to examine the exposed rock face to check for indications of instability. After inspecting the rock face, should the Contracting Officer determine the rock to be unstable, remedial work such as rock bolting shall be implemented. An adjustment in the Contract Price will be made when remedial measures must be implemented to stabilize the exposed rock face.

All rock bearing surfaces shall be sound, nondisplaced rock leveled to a slope not exceeding 1 inch per foot.

3.1.2 Cleaning of Rock Surfaces

Contractor shall clean all rock bearing surfaces exposed during excavation to permit a thorough inspection and assessment of the condition of the rock by the Contracting Officer.

Cleaning of rock surfaces for inspection shall consist of the removal

of all organic material, soil, demolition debris, and loose rock from the exposed rock surface. Cleaning may be done with high pressure air jets, water jets, brooms or by any other method acceptable to Contracting Officer.

All standing water shall be removed from the area to be inspected to permit proper examination of the rock.

Contractor shall provide suitable means of access for inspection of the excavated and scaled areas by the Contracting Officer.

Contractor shall protect all adjacent areas from flying rock by using blasting mats which are in good condition or other suitable measures as approved by the Contracting Officer.

3.2 EXPLOSIVES - HANDLING AND USE

All explosives shall be stored off-site and shall be stored in suitable table magazines provided and maintained by Contractor. The magazine shall be appropriate for the types and quantities of explosives to be used. The magazine shall be constructed, fitted out, grounded, and made secure in compliance with all federal and State requirements.

Contractor shall keep fully detailed records giving the types and quantities of explosives delivered, on hand and used, including manufacturer's batch numbers. Records of detonators by types and delays shall also be maintained. These records shall be available for inspection by the Contracting Officer, and shall be maintained at Contractor's site office.

Transport of explosives and detonators shall be in vehicles suitably grounded and protected from lightning strikes and electrical storm phenomena, in accordance with federal and state requirements.

No explosives shall be handled, transported, or in any way made use of during any period of electrical storm, lightning, or other electrical phenomena.

A blaster designated by Contractor and experienced in controlled blasting techniques shall be present during, and in direct control of all explosives handling, loading, and blasting operations.

Contractor shall take every precaution to prevent premature explosions and misfires. Under no circumstances are lightning or power cables to be used for firing.

An adequate warning system shall be provided to ensure that all persons are at a safe distance before a blast is detonated. Blasting signal signs shall conform to 29 CFR 1926.909 (OSHA) and shall be posted at each access to the work site.

Should a misfire occur, Contractor shall warn all persons affected and no persons other than the designated blaster and supervisor shall enter the work area until the charge has exploded or been made safe. Only

when the Contractor's designated blaster and his project representative are satisfied that danger no longer exists will the workers be allowed back into the area.

3.3 BLAST MONITORING

Contractor shall monitor each blast by means of three-component particle velocity measuring equipment to determine particle velocities generated by the blast.

Contractor shall provide monitoring equipment and skilled operators to monitor blasts at a minimum of two locations on and adjacent to the site as required by Contracting Officer. Contractor may use additional monitoring equipment for special areas Contractor shall submit the results of particle velocity measurements to Contracting Officer immediately after each blast.

Contractor shall maintain and submit to Contracting Officer after each blast, a blasting record for the blast. The record shall include location and elevation of the blast; the depth, spacing, burden, number and diameter of holes; delay pattern, powder factor and maximum quantity of explosive per delay; distance to nearest structure; and seismograph locations and copies of seismograph reading records.

Contractor shall continuously monitor for stray electrical currents utilizing device(s)) designed for detecting both stray ground electric potential and currents and atmospheric electric potential over ground.

Monitoring devices shall be OSHA or MSHA approved, and shall be specifically designed for the specified monitoring use.

Blasting shall be performed in a manner such that a maximum particle velocity of 0.5 inches per second is not exceeded at the Contract Limit lines or immediately adjacent to any in-place construction (including utilities).

3.4 DUST CONTROL

The Contractor shall employ dust control methods and materials at all times using sprinklered water or other approved means. Do not use oil or similar penetrants. Refer to Section 00800, SPECIAL CONTRACT REQUIREMENTS for additional requirements.

-- End of Section --

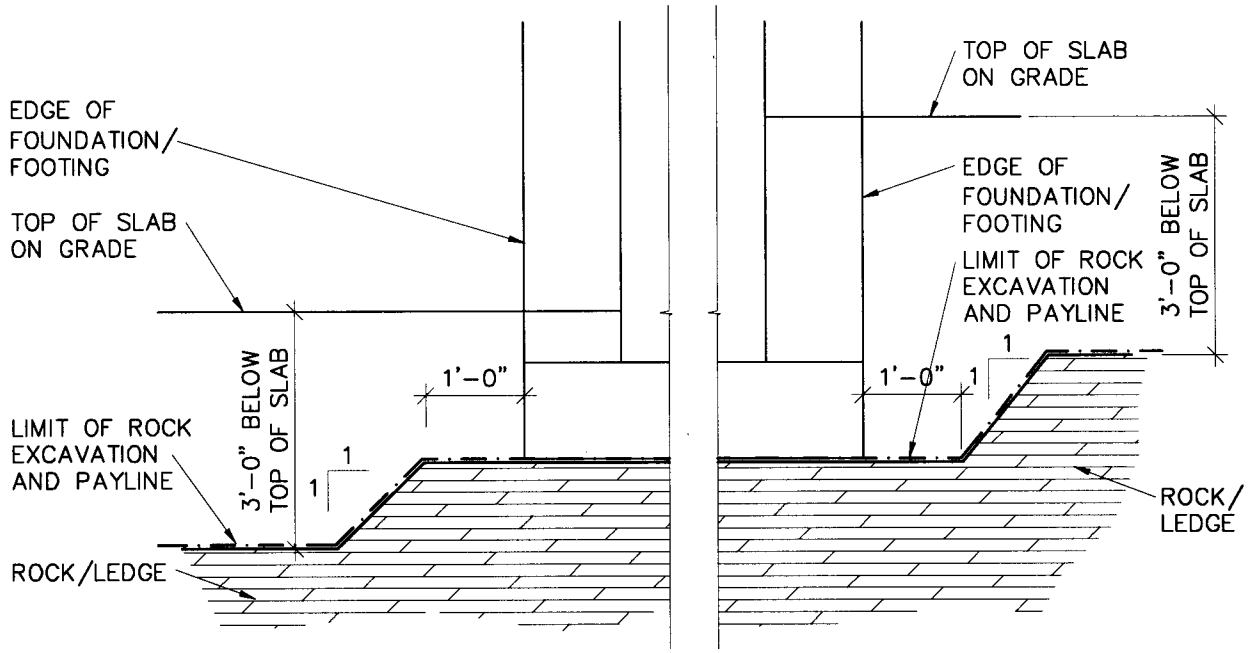

BUILDING FOUNDATION INTERIOR CONDITIONS – TYPICAL

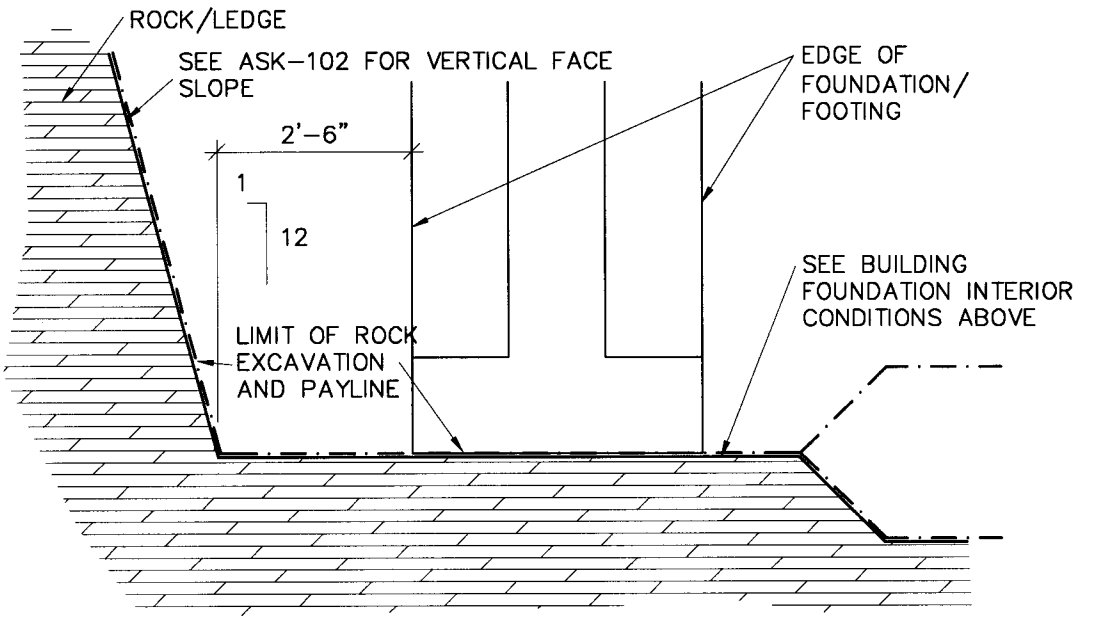

BUILDING FOUNDATION EXTERIOR CONDITION – TYPICAL

Project Title
ARVIN CADET PHYSICAL DEVELOPMENT CENTER, PHASE 2/3

Drawing Title
ROCK EXCAVATION

Project Number
04332.00

PAYMENT LINES – TYPICAL

Sasaki Associates, Inc.
64 Pleasant Street, Watertown, Massachusetts 02172 617/926 3300 FAX 617/294 2748

Drawn By: EEC
Scale: NONE
Date: 07/01/01
Drawing Number: ASK–101

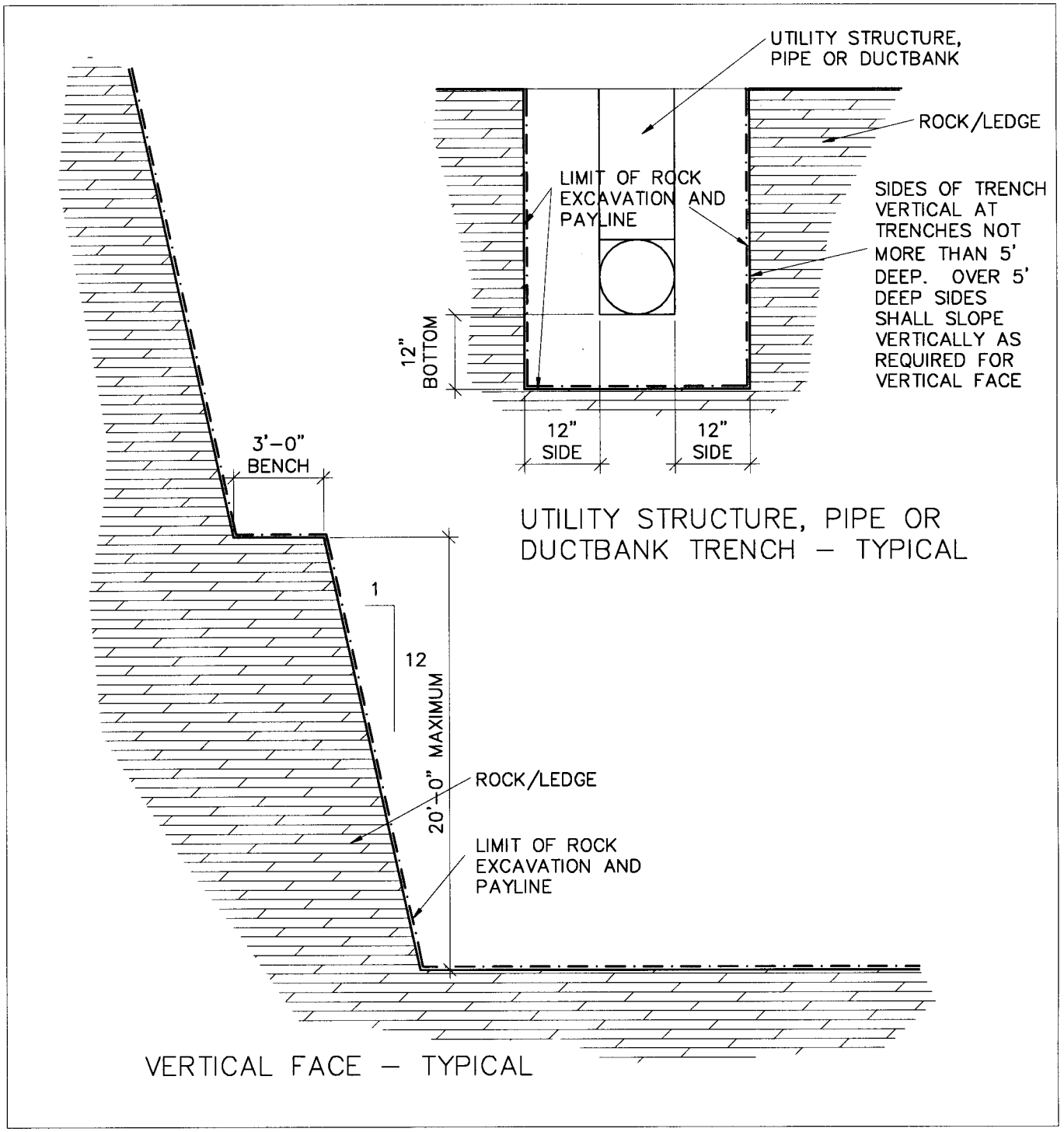

Project Title
ARVIN CADET PHYSICAL DEVELOPMENT CENTER, PHASE 2/3

Drawing Title
ROCK EXCAVATION

Project Number
04332.00

PAYMENT LINES – TYPICAL

Sasaki Associates, Inc.
64 Pleasant Street, Watertown, Massachusetts 02172 617/926 3300 FAX 617/294 2748

Drawn By: EEC
Scale: NONE
Date: 07/01/01
Drawing Number: ASK–102

SECTION 02223

ROCK BOLTING

PART 1 GENERAL

1.1 REFERENCES

The publications listed below form a part of this specification to the extent referenced. The publications are referred to in the text by basic designation only.

AMERICAN SOCIETY FOR TESTING AND MATERIALS (ASTM)

ASTM A 36	(1997) Specification for Carbon Structural Steel
ASTM A 325	(1997) Specification for High-Strength Bolts for Structural Steel Joints
ASTM A 722	(1998) Specification for Uncoated High-Strength Steel Bar for Prestressing Concrete
ASTM A 775	(1997) Specification for Epoxy-Coated Reinforcing Steel Bar

1.2 SUBMITTALS

Government approval is required for submittals with a "GA" designation; submittals having an "FIO" designation are for information only. The following shall be submitted in accordance with Section 01330 SUBMITTAL PROCEDURES:

SD-04 Drawings

Detailed Shop Drawings; GA.

Submit detailed shop drawings showing the rock bolts with the double corrosion protection system, bolt hole, anchor zone, base plate and other appurtenances, along with the installation and pull testing procedures.

SD-09 Reports

Strand Tendon; FIO.

Certified mill reports for strand tendon.

Stressing Head Assembly; FIO.

Certified mill report for stressing head assembly.

Testing and Inspection for Contractor Quality Control; FIO

Certified copies of laboratory test reports, including mill tests and all other test data, for grout including strength testing in conformance with ASTM C-109, test reports for water tightness, performance tests and proof tests.

SD-13 Certificates

Rock Bolts; FIO

Certificates of compliance stating the rock bolt materials and assemblies conform to the requirements specified.

Jack and Pressure Gauge Calibration; FIO

Certified jack and pressure gauge calibration for pull testing of rock bolts.

Qualifications; FIO

Written documentation of contractor experience.

1.3 DESCRIPTION

This section specifies test anchors and production anchors, including Double Corrosion Protection System, drilled holes, grouting and testing.

Provide all labor, materials, equipment and incidentals required to drill, install, and test 142 kip design capacity rock bolts for stabilization of existing rock faces. Rock bolts for stabilization of existing rock faces shall be located as directed by the Contracting Officer.

Provide all labor, materials, equipment and incidentals required to drill, install, and test 40 kip design capacity rock bolts for foundation hold-down. Rock bolts for foundation hold-down shall be located as indicated.

1.4 EXPERIENCE

The rock bolt installation Contractor and bolt supplier shall furnish evidence that they have been engaged in the successful installation, supply and testing (respectively) of rock bolts and anchors for at least five years.

1.5 QUALITY CONTROL

Day to day inspection and testing shall be the responsibility of the Contractor Quality Control (CQC) staff. However, representatives of the Contracting Officer can and will inspect construction as considered appropriate and will monitor operations of the Contractor's CQC staff. Government inspection or testing will not relieve the Contractor of any of

his CQC responsibilities.

1.6 Measurement and Payment

Payment for in place installation shall be included in the contract price as indicated in the "Prices Schedule" and in Section 01025, MEASUREMENT AND PAYMENT.

PART 2 PRODUCTS

2.1 MATERIALS

2.1.1 ROCK BOLTS

Each rock bolt for stabilization of existing rock face shall consist of a single, deformed bar, furnished in one piece of up to 40 feet in length without couplings, encased in P.V.C. corrugated sheathing of 142 kip design capacity.

Each rock bolt for foundation hold-down shall consist of a single, deformed bar, furnished in one piece of up to 30 feet in length without couplings, encased in P.V.C. corrugated sheathing of 40 kip design capacity.

A smooth sheathing fitting snugly over the corrugated sheathing in the free stressing length shall guarantee unobstructed elongation during stressing.

The deformed prestressing bar shall be centered in the corrugated sheathing and the annular space between the bar and the sheathing shall be filled with cement grout.

The anchor shall be preassembled and pre-grouted at the factory prior to shipping to the job site.

The PVC sheathing shall form a gas and water-tight barrier around the pre-stressing steel bar.

A steel seamless pipe (trumpet) welded to the steel bearing plate shall guarantee continuity of the corrosion protection. The seamless pipe shall be of sufficient length to overlap the corrugated sheathing.

A steel hexagonal nut with a round head shall fit into the countersunk hole in the bearing plate.

Both steel hexagonal nut and bearing plate with trumpet shall have factory-applied epoxy coating.

A plastic cap and plastic nut filled with mastic corrosion inhibitor (grease) shall encapsulate the hexagonal nut for corrosion protection.

2.1.2 PRESTRESSING STEEL

The prestressing steel tendons shall be threaded bars, Grade 150 KSI conforming to ASTM A 722, Type II, cold-stretched and stress-relieved after the threading process. Each bar shall be factory proof stressed after

threading operation to a minimum of 80% of the guaranteed minimum tensile strength.

2.1.3 PLASTIC SHEATHING

Corrugated plastic sheathing shall be polyvinylchloride, having a minimum compressive/tensile strength of 7,000 psi.

Material shall be free of water soluble chlorides and other ingredients which might enhance corrosion, hydrogen embrittlement or stress corrosion on the pre-stressing steel. The plastic shall be non-reactive with the grout and its ingredients.

The plastic sheathing shall be gas and water-tight, resistant against chemical attacks and aging.

2.1.4 ACCESSORIES

Steel bearing plates shall be "dished" to accommodate the rounded hex nut, conform to ASTM A 36, 1-3/4 in. x 12 in. x 12 in.

Nuts shall be hexagonal, heavy duty type with round head, conforming to ASTM A 325 or the bar manufacturer's specifications.

At rock bolts for stabilization of existing rock faces provide beveled washers as needed to maintain alignment of bolt and bearing plate within 15 degrees of perpendicular.

2.1.5 MISCELLANEOUS

Grease for the stressing head assembly shall be a mastic corrosion inhibitor, waterproof, non-corrosive, non-hardening sealing compound.

Epoxy coating shall conform to ASTM A 775.

Bearing plate leveling mix shall be as recommended by the bolt manufacturer for leveling of rock or concrete surfaces.

2.1.6 CEMENT GROUT

Cement grout for grouting anchors shall be neat cement, with a water-cement ratio of 0.45 by weight. An approved additive shall be mixed with the grout as an expanding agent.

The cement grout shall have sufficient strength to guarantee the load transfer between the threaded bar and the corrugated sheathing.

PART 3 EXECUTION

3.1 DRILL HOLES

The holes shall be drilled to the diameter, depth, line and tolerances specified in paragraphs 3.3, 3.4, and 3.5.

3.2 METHOD OF DRILLING

Drill holes for rock anchors shall be made by core drilling, rotary drilling, or percussion drilling. Steel casing may be required to maintain an open hole.

Drill holes for foundation hold-down shall be drilled through concrete footings/foundations and shall be placed to prevent damage to reinforcing steel.

3.3 DIAMETER

The minimum diameter of the drill holes shall be:

1 inch dia. bar: 3-inch (Min) to 4-inch (Standard)
1-3/8-inch dia. bar: 3-1/2-inch (Min) to 4-inch (Standard)

3.4 DEPTH

The holes for rock bolts for stabilization of existing rock faces shall be drilled to a depth corresponding to 1 to 1.5 feet less than the total bolt length.

The holes for rock bolts for foundation hold-down shall be drilled to a depth of 21 feet below the tops of the rock, or 12 inches beyond the end of the anchor tendon, whichever is greater.

3.5 ALIGNMENT

All drill holes for rock bolting for stabilization of existing rock faces shall be drilled at 15 degrees down from horizontal unless directed otherwise by the Contracting Officer.

All drill holes for rock bolting for foundation hold-down shall be drilled vertically unless directed otherwise by the Contracting Officer.

The holes shall be drilled to an angle tolerance of 3% of their planned location and the straightness shall be such that in any section of hole 10 feet long, the maximum deviation from a straight line between ends of the section shall not exceed 1-inch.

3.6 WATER TIGHTNESS FOR ROCK ANCHORS

Prior to installation of rock bolts of either types the drill hole should be tested for water tightness by filling it with water and subjecting it to a pressure of 5 psi. If the water level drops in excess of 50% of the drill hole length in ten (10) minutes, the hole shall be consolidation-grouted, re-drilled and re-tested. This procedure shall be repeated until the water level is maintained within the required range.

No water tightness tests shall be made where the water would affect the strength of the rock bond between the grout and rock.

3.7 CLEANING

Drill holes shall be thoroughly cleaned for their full depth with water or air.

3.8 INSTALLATION OF ANCHORS

The installation of rock bolts for stabilization of existing rock faces shall proceed from the top of the slope downward. Bolt holes shall be drilled into the rock at the locations and angles ordered by the Contracting Officer. All rock bolts shall be installed within 70 feet vertically of the adjacent ground surface into sloped rock surfaces which are greater than 45 degrees above horizontal.

The installation of rock bolts for foundation hold-down shall proceed uniformly across each footings/foundations. Bolt holes shall be drilled vertically through the concrete footings/foundations into the rock. Do not damage reinforcing steel. Do not displace footings/foundations.

Rock Bolts shall be placed in accordance with "PTI Recommendations for Prestressed Rock and Soil Anchors" and as per approved manufacturer's shop drawing.

All equipment used for placing shall be such that it will not damage the corrugated sheathing.

The anchor bond length shall be grouted by injecting grout at the lowest point in the anchor.

3.9 FINAL BOLT LOCATION

Prior to installation, allow sufficient time for the Contracting Officer to make minor relocations in order to avoid highly fractured and/or weathered areas.

3.10 LEVELING OF THE SURFACE

At rock bolts for stabilization of existing rock faces the rock surface shall be leveled at each bolt location so that the bearing plate is in intimate contact with the rock over its entire area. Leveling shall be such that the bearing plate is within 15 degrees of perpendicular to the axis of the rock bolt. The method of leveling the rock surface shall be approved by the Contracting Officer. Acceptable methods include, but are not limited to the following:

1. Chipping of the rock surface.

2. Applying a special mix supplied by the bolt manufacturer for leveling purposes.

3. Use of steel wedges plus a leveling mix.

4. A combination of chipping and leveling mix with or without wedges.

At rock bolts for foundation hold-down the rock surface shall be prepared

as required by Section 02222 ROCK EXCAVATION for rock bearing surfaces.

At rock bolts for foundation hold-down the concrete foundation surface shall receive a special grout mix for leveling of the concrete surface as recommended by the bolt manufacturer to provide intimate contact of the bearing plate over its entire area.

3.11 ANCHOR TESTING AND STRESSING

Each rock bolt shall be proof tested to a maximum test load shall of 80 percent of the guaranteed ultimate tensile strength (GUTS) of the tendon.

Rock bolts for stabilization of existing rock faces shall be locked off at 140 to 145 kips. The lock off load shall be confirmed by a visual "lift off" test.

3.12 PERFORMANCE TEST

One (1), 142-kip rock bolt shall be performance tested.

One (1), 40-kip rock bolt shall be performance tested.

The performance test shall be made by incrementally loading and unloading the anchor in accordance with the following schedule. At each increment, the movement of the tendon shall be recorded to the nearest 0.001 inches (0.0025 cm) with respect to an independent fixed reference point. The jack load shall be monitored with a pressure gauge or load cell. The increment of the load shall be: P = design load for the anchor; AL = alignment load.

Performance Test

AL, 0.25 P
AL, 0.25 P, 0.50 P
AL, 0.25 P, 0.50 P, 0.75 P
AL, 0.25 P, 0.50 P, 0.75 P, 1.00 P
AL, 0.25 P, 0.50 P, 0.75 P, 1.00 P, 1.20 P
AL, 0.25 P, 0.50 P, 0.75 P, 1.00 P, 1.20 P, 1.33 P
(Hold for creep test)

The test load shall be held for 10 minutes. Total movements with respect to a fixed reference point shall be recorded at 1 minute, 2, 3, 4, 5, 6, 10 minutes. If the total movement between 1 minute and 10 minutes exceeds 0.04 in. (1 mm), the test load shall be held for an additional 50 minutes. Total movements shall be recorded at 15 minutes, 20, 25, 30, 45, and 60 minutes.

3.13 PROOF TEST

All production bolts shall be proof-tested. The proof test shall be performed by incrementally loading the anchor in accordance with the following schedule. At each increment, the movement of the tendon shall be recorded to the nearest 0.001 inches (0.0025 cm) with respect to an independent fixed reference point. The jack load shall be monitored with a

pressure gauge or load cell. The increments of load shall be:
P = Design load for the anchor.

Proof Test

AL, 0.25 P, 0.50 P, 0.75 P, 1.00 P, 1.20 P, Test Load

The proof test results shall be compared to the performance test results. If the Total Deflection exceeds 25% of the performance test results, a performance test shall be made on the next anchor placed.

3.14 ACCEPTANCE CRITERIA

The Contractor shall evaluate the anchor test results and determine whether the anchor is acceptable. An anchor shall be accepted if:

1. The total elastic movement obtained from a performance test should exceed 80 percent of the theoretical elastic elongation of the stressing length and be less than the theoretical elastic elongation of the stressing length plus 50 percent of the bond length.

2. The creep movement does not exceed 0.080 inches (0.20 cm) during the final time increment of the performance test regardless of the tendon length and load.

3. The lift-off test shows an anchor load within 10 percent of the specified transfer load.

4. The Contracting Officer shall determine whether an anchor which fails to meet the above minimum acceptance criteria may be incorporated in the work.

-- End of Section --

SECTION 02230

CLEARING AND GRUBBING

PART 1 GENERAL

1.1 DEFINITIONS

1.1.1 Clearing

Clearing shall consist of the felling, trimming, and cutting of trees into sections and the satisfactory disposal of the trees and other vegetation designated for removal, including down timber, snags, brush, and rubbish occurring in the areas to be cleared.

1.1.2 Grubbing

Grubbing shall consist of the removal and disposal of stumps, roots larger than 3 inches in diameter, and matted roots from the designated grubbing areas.

1.2 SUBMITTALS

Government approval is required for submittals with a "GA" designation; submittals having an "FIO" designation are for information only. Unless otherwise indicated, primary reviewer for these submittals will be the Contracting Officer. The following shall be submitted in accordance with Section 01330 SUBMITTAL PROCEDURES:

SD-08 Statements

Written Permission; FIO

Written permission to dispose of such products on private property shall be filed with the Contracting Officer.

PART 2 PRODUCTS (Not Applicable)

PART 3 EXECUTION

3.1 CLEARING

Trees, stumps, roots, brush, and other vegetation in areas to be cleared shall be cut off flush with or below the original ground surface, except such trees and vegetation as may be indicated or directed to be left standing. Trees designated to be left standing within the cleared areas shall be trimmed of dead branches 1-1/2 inches or more in diameter and shall be trimmed of all branches the heights indicated or directed. Limbs and branches to be trimmed shall be neatly cut close to the bole of the tree or main branches. Cuts more than 1-1/2 inches in diameter shall be painted with an approved tree-wound paint. Trees and vegetation to be left

standing shall be protected from damage incident to clearing, grubbing, and construction operations by the erection of fences, barriers or by such other means as approved by the Contracting Officer.

3.2 GRUBBING

Material to be grubbed, together with logs and other organic or metallic debris, shall be removed to a depth of not less than 18 inches below the original surface level of the ground, or where rock is encountered less than 18 in., material shall be moved completely in areas indicated to be grubbed and in areas indicated as construction areas under this contract, such as areas for buildings, and areas to be paved. Depressions made by grubbing shall be filled with Borrow material as zspecified in Section 02316 EXCAVATION, TRENCHING, AND BACKFILLING FOR UTILITY SYSTEMS, and compacted to make the surface conform with the original adjacent surface of the ground.

3.3 DISPOSAL OF MATERIALS

3.3.1 Materials Disposal

Logs, stumps, roots, brush, rotten wood, and other refuse from the clearing and grubbing operations, shall be disposed of outside the limits of Government-controlled land at the Contractor's responsibility, except when otherwise directed in writing. Such directive will state the conditions covering the disposal of such products and will also state the areas in which they may be placed.

-- End of Section --

SECTION 02316

EXCAVATION, TRENCHING, AND BACKFILLING FOR UTILITIES SYSTEMS

PART 1 GENERAL

1.1 REFERENCES

The publications listed below form a part of this specification to the extent referenced. The publications are referred to in the text by basic designation only.

AMERICAN SOCIETY FOR TESTING AND MATERIALS (ASTM)

ASTM D 422	(1963; R 1990) Particle-Size Analysis of Soils
ASTM D 1557	(1991) Laboratory Compaction Characteristics of Soil Using Modified Effort (56,000 ft-lbf/cu. ft. (2,700 kN-m/cu. m.)
ASTM D 2167	(1994) Density and Unit Weight of Soil in Place by the Rubber Balloon Method
ASTM D 2487	(1998) Classification of Soils for Engineering Purposes (Unified Soil Classification System)
ASTM D 2922	(1996) Density of Soil and Soil-Aggregate in Place by Nuclear Methods (Shallow Depth)
ASTM D 3017	(1988; R1996el) Water Content of Soil and Rock in Place by Nuclear Methods (Shallow Depth)

New York State Department od Transportation (NYSDOT)

NYSDOT Section 200	Earthwork

Occupational Safety and Health Administration (OSHA)

OSHA EM 385-1-1	(1996) Safety and Health Requirements Manual
OSHA Standards	Standards (29 CFR

1.2 MEASUREMENT AND PAYMENT

1.2.1 Rock Excavation

Rock excavation shall be measured as specified in Section 02222, Rock Excavation, and paid for in accordance with Section 01025, MEASUREMENT AND PAYMENT.

1.2.2 Excavation

If any part of the excavation is carried beyond the depth directed by the Contracting Officer, and the dimensions indicated on the Drawings, or called out for in the Specifications, the Contractor at his own expense, shall furnish and install Structural Fill as defined in Section 02221 and as directed by the Contracting Officer up to the required level and/or dimensions.

Excavation, removal, and/or disposal of unsuitable materials below the grades called for on the Drawings and specified herein, shall be paid for in accordance with Section 01025, MEASUREMENT AND PAYMENT after removal of such materials has been authorized by the Contracting Officer. The quantities of excavation, removal, disposal and backfilling involving an adjustment of the Contract Price shall be subject to measurement verification and approval by the Contracting Officer, prior to removal of such materials.

1.3 DEGREE OF COMPACTION

Degree of compaction shall be expressed as a percentage of the maximum density obtained by the test procedure presented in ASTM D 1557.

1.4 SUBMITTALS

Government approval is required for submittals with a "GA" designation; submittals having an "FIO" designation are for information only. Unless otherwise indicated, primary reviewer for these submittals will be the Contracting Officer. The following shall be submitted in accordance with Section 01330 SUBMITTAL PROCEDURES:

SD-09 Reports

Field Density Tests; FIO. Testing of Backfill Materials; FIO.

Copies of all laboratory and field test reports within 24 hours of the completion of the test.

PART 2 PRODUCTS

2.1 MATERIALS

2.1.1 Satisfactory Materials

a. Gravel Bedding (for utilities) shall conform to NYSDOT Item 620.08, shall be gravel, crushed quarry rock or crushed gravel, from off-site sources.

b. Common Fill/Borrow (in landscaped areas) shall be bankrun sand, gravel, or mixture thereof, graded within the following

limits:

Sieve Size	% Passing by Weight
6 inch	100
No. 4	30-95
No. 200	0-15

c. Sand Fill (specialty applications) shall be a sand, graded within the following limits:

Sieve Size	% Passing by Weight
No. 4	100
No. 200	0-8

2.1.2 Unsatisfactory Materials

Unsatisfactory materials include materials classified in ASTM D 2487 as Pt, OH, OL, and any other materials excavated from onsite.

2.2 PLASTIC MARKING TAPE

Plastic marking tape shall be acid and alkali-resistant polyethylene film, 6 inches wide with minimum thickness of 0.004 inch. Tape shall have a minimum strength of 1750 psi lengthwise and 1500 psi crosswise. The tape shall be manufactured with integral wires, foil backing or other means to enable detection by a metal detector when the tape is buried up to 3 feet deep. The tape shall be of a type specifically manufactured for marking and locating underground utilities. The metallic core of the tape shall be encased in a protective jacket or provided with other means to protect it from corrosion. Tape color shall be as specified in TABLE 1 and shall bear a continuous printed inscription describing the specific utility.

TABLE 1. Tape Color

Red:	Electric
Yellow:	Gas, Oil, Dangerous Materials
Orange:	Telephone, Telegraph, Television, Police, and Fire Communications
Blue:	Water Systems
Green:	Sewer Systems

PART 3 EXECUTION

3.1 EXCAVATION

3.1.1 Trench Excavation

Trench excavation shall conform to the requirements specified under NYSDOT Section 200 EARTHWORK.

All excavated material shall be legally disposed of off post property.

All work of this Section shall be carried out conforming to OSHA Standards, including OSHA EM 385-1-1.

3.1.2 Bottom Preparation

Bottom preparation of trenches shall conform to NYSDOT Section 200 EARTHWORK.

3.2 BACKFILL AND COMPACTION

Backfill and compaction for utilities shall conform to NYSDOT Section 200 EARTHWORK, and as detailed on the Drawings.

3.3 SPECIAL REQUIREMENTS

Special requirements for both excavation and backfill relating to the specific utilities are as follows:

3.3.1 Water Lines

Trenches shall be of a depth to provide a minimum cover of 5 feet from the existing ground surface, or from the indicated finished grade, whichever is lower, to the top of the pipe.

3.3.2 Electrical Distribution System

Cable and conduit or duct line shall have a minimum cover of 24 inches from the finished grade, unless otherwise indicated. Special trenching requirements for direct-burial electrical cables and conduits are specified in Section 16375 ELECTRICAL DISTRIBUTION SYSTEM, UNDERGROUND.

3.3.3 Plastic Marking Tape

Warning tapes shall be installed directly above the pipes and conduits, at a depth of 18 inches below finished grade unless otherwise shown.

3.4 TESTING

Testing shall be the responsibility of the Contractor and shall be performed at no additional cost to the Government. All testing required shall conform to NYSDOT Section 200 EARTHWORK.

3.4.1 Testing of Backfill Materials

Characteristics of backfill materials shall be determined in accordance with particle size analysis of soils ASTM D 422 and moisture-density relations of soils ASTM D 1557. A minimum of one particle size analysis and one moisture-density relation test shall be performed on each different type of material used for bedding and backfill.

3.4.2 Field Density Tests

Tests shall be performed in sufficient numbers to ensure that the specified

density is being obtained. A minimum of one field density test per lift of backfill for every 1000 feet of installation shall be performed. One moisture density relationship shall be determined for every 1500 cubic yards of material used. Field in-place density shall be determined in accordance with ASTM D 1556, ASTM D 2167 or ASTM D 2922. When ASTM D 2922 is used, the calibration curves shall be checked and adjusted using the sand cone method as described in paragraph Calibration of the ASTM publication. ASTM D 2922 results in a wet unit weight of soil and when using this method, ASTM D 3017 shall be used to determine the moisture content of the soil. The calibration curves furnished with the moisture gauges shall be checked along with density calibration checks as described in ASTM D 3017. The calibration checks of both the density and moisture gauges shall be made at the beginning of a job, on each different type of material encountered, at intervals as directed by the Contracting Officer. Copies of calibration curves, results of calibration tests, and field and laboratory density tests shall be furnished to the Contracting Officer. Trenches improperly compacted shall be reopened to the depth directed, then refilled and compacted to the density specified at no additional cost to the Government.

-- End of Section --

SECTION 02466

DRILLED FOUNDATION CAISSONS

PART 1 GENERAL

1.1 REFERENCES

The publications listed below form a part of this specification to the extent referenced. The publications are referred to in the text by basic designation only.

AMERICAN SOCIETY FOR TESTING AND MATERIALS (ASTM)

ASTM A 615/A 615M	(1996a) Deformed and Plain Billet-Steel Bars for Concrete Reinforcement

AMERICAN WELDING SOCIETY (AWS)

AWS D1.1	(1996) Structural Welding Code - Steel

Occupational Safety and Health Administration (OSHA)

OSHA Standards	Standards (29 CFR

1.2 BASIS OF PAYMENT

Payment for the provision of drilled foundation caissons, steel casings left in place, and proof test holes shall be included in the contract price as indicated in the "Price Schedule" and in Section 01025, MEASUMENT AND PAYMENT. No payment will be made for caissons not complying with the requirements of the Specifications.

Payment in accordance with the above paragraph shall constitute full compensation for excavation, removal and disposal of all materials and rock, furnishing, delivering, handling, and/or installing (as applicable) all material, labor and equipment necessary to meet contract requirements applicable to the foundation caissons and proof test holes. The Contractor will not be allowed payment for rejected caissons or rejected proof test holes.

1.3 MEASUREMENT

Measurement shall be in accordance with the requirements of Section 01025 MEASUREMENT AND PAYMENT.

If any part of the work is carried beyond the depths and dimensions indicated by the Contracting Officer and the dimensions indicated on the Drawings or called for by the Specifications, the Contractor at his own expense shall provide the additional labor and materials necessary to

provide the required load carrying capacity of the work. Such additional labor and materials shall be approved by the Contracting Officer.

1.4 SUBMITTALS

Government approval is required for submittals with a "GA" designation; submittals having an "FIO" designation are for information only. The following shall be submitted in accordance with Section 01330 SUBMITTAL PROCEDURES:

SD-01 Data

Drilled Foundation Caissons; FIO.

A certified copy of the survey. Lines and levels shall be established and caisson centerline locations staked and maintained by a New York State registered surveyor or engineer provided by the Contractor.

SD-08 Statements

Qualifications; FIO.

Qualifications of the foundation system Contractor shall show that he has been engaged in the successful installation of drilled foundation caissons for at least 5 years.

Test Results.

SD-09 Reports

Protection; GA.

Written report of protection procedures, detailing methods and materials/equipment to be used to prevent debris from falling in excavation or concrete.

SD-18 Records

Drilled Foundation Caissons; FIO.

Detailed records in an approved form, for each caisson, showing shaft and bell diameters, depths of test holes, top and bottom elevations, bearing strata description, casing description, water conditions, concrete strength, concrete volume, rock elevations, dates of excavation and concrete placement, and other pertinent information. Upon completion of caisson work, the Contractor shall provide a record of centerline locations based on the survey of the registered surveyor or engineer provided by the Contractor. In addition, corrective measures shall be similarly recorded. A complete tabulation of all records pertaining to approved caissons shall be delivered to the Contracting Officer.

1.5 QUALIFICATIONS

1.5.1 Specialty Subcontractor

The work shall be performed by a specialty subcontractor, specializing in the specified foundation system and having experience installing the specified foundation system under similar subsurface conditions.

1.5.2 Welding

Welding shall be in accordance with AWS D1.1. Qualification of welding procedures, welders, and welding operators shall be in accordance with AWS D1.1, Section 5. Records of test results of welding procedures not prequalified and copies of records for each qualified welding operator, containing records on positions of welding and types of electrode qualifications, shall be kept by the Contractor and be available for examination by the Contracting Officer.

1.6 PROJECT/SITE CONDITIONS

1.6.1 Subsurface Data

Subsurface soil data logs are shown in the Appendix at the End of the Specifications.

1.7 SEQUENCE OF WORK

1.7.1 Caisson Excavation

Excavation of caissons or groups of caissons shall be performed so that reinforcing steel and concrete placement is a continuous operation performed the same day that the excavation is completed. Caisson excavations shall not be left open overnight.

1.7.2 Acceptance

Concrete shall be placed within 3 hours after approval of the completed caisson excavation.

1.8 SUPERVISION, INSPECTION, AND SAFETY

1.8.1 Contractor Supervision

The Contractor shall provide for the supervision of all phases of drilled caisson construction. Supervision shall be the Contractor's responsibility as outlined in Quality Control provisions of the SPECIAL CONTRACT REQUIREMENTS. Each drilled caisson excavation shall be checked by the Contractor for its depth, water removal, cleanup, workmanship, and for all tolerance requirements before any concrete is placed.

1.8.2 Government Assurance Inspection and Testing

Day-to-day inspection and testing shall be by the Contractor Quality Control (CQC) staff. However, representatives of the Contracting Officer may inspect construction as considered appropriate and may monitor operations of the Contractor's CQC staff. Government inspections or testing will not relieve the Contractor of any of his CQC responsibilities.

1.8.3 Safety Precautions for Workmen and Inspectors

The contractor shall comply with the requirements of OSHA and Government regulations and standards for work within caisson excavations. All caisson excavations shall be assumed to be confined/permitted spaces as defined by OSHA Standards.

PART 2 PRODUCTS

2.1 CONCRETE WORK

Concrete work shall be in accordance with requirements of Section 03300 CAST-IN-PLACE STRUCTURAL CONCRETE, as modified herein:

2.1.1 Coarse Aggregate

Maximum size of coarse aggregate shall be 1-1/2 inches.

2.1.2 Reinforcing Steel

Reinforcing steel shall conform to ASTM A 615/A 615M Grade 60. Steel shall be fabricated into cages in accordance with the requirements of Section 03200 CONCRETE REINFORCEMENT, but without use of welding, and inserted securely in the caissons, in position and alignment, as required, prior to concrete placement.

2.1.3 Strength

Concrete strength shall be 3,000 psi at 28 days. Slump shall be from 4 inches.

PART 3 EXECUTION

3.1 PREPARATION AND EXCAVATION

All caissons shall bear on rock. Excavation shall be carried to sufficient depth through overburden materials and into rock to provide a level bearing surface of rock across the entire caisson shaft. Each caisson excavation shall be drilled and carried into rock a minimum of 3 inches around the entire perimeter.

a. Caissons shall be excavated to required depths and dimensions shown. Caisson bottom elevations where indicated are for information only. All caissons shall be excavated to the depth required to provide the required bearing surface. Bottoms of caissons shall be cleaned of loose or soft material and leveled. Excavated material shall be considered unsatisfactory material and shall be disposed of in accordance with Section 02221 EXCAVATION, FILLING AND BACKFILLING FOR BUILDINGS and Section 02316 EXCAVATION, TRENCHING AND BACKFILLING FOR UTILITIES SYSTEMS.

b. Excavation of rock shall be carried out in accordance with section 02222 ROCK EXCAVATION, except no blasting for caissons shall be

permitted. The contractor shall assume that all existing rock surfaces have a cross slope of 45 degrees or greater from the horizontal.

c. In drilling caissons, the surrounding soil and the earth walls shall be adequately and securely protected against cave-ins, displacement of the surrounding earth, and retention of ground water, by means of temporary steel casings. Casings shall have outside diameters not less than indicated shaft sizes, shall be a minimum of 1/4 inch thick, and shall not be removed if the structural integrity of the caisson will be impaired, as determined by the Contracting Officer. Temporary steel casings shall be withdrawn, as the concrete is being placed, maintaining sufficient head of concrete within the casing to prevent extraneous material from falling in from the sides and mixing with the concrete. Casings may be jerked upward a maximum of 4 inches to break the bottom seal, but thereafter shall be removed with a smooth, continuous motion. The inside of steel casings shall be thoroughly cleaned and oiled before reuse.

d. The temporary casing shall be in place from the caisson top to the ground surface until the concrete has set if the elevation of the top of the caisson is below the adjacent ground surface.

e. Water that flows into the excavations shall be continuously removed and all water shall be removed from the excavation bottom, to the extent possible, prior to concrete placement. The maximum permissible depth of water shall not exceed 2 inches. In the event of a severe water condition that makes it impossible or impractical to dewater the excavation, and upon approval of the Contracting Officer, concrete shall be placed using underwater tremie after water movement has stabilized.

f. Each caisson excavation shall be inspected by the Contractor for conformance to the requirements of Drawings and Specifications prior to placing concrete. A record of all inspections, with related construction changes, shall be kept by the Contractor. The Contractor shall provide support personnel, equipment and materials for inspection and testing procedures.

g. The contractor shall provide proof test holes of bearing surfaces as directed by the Contracting Officer.

h. Should the Contractor encounter an existing caisson located within the plan area of a proposed caisson, the Contractor shall document the plan location of the existing caisson on a sketch, locating the existing condition relative to the new column lines. The field sketch shall then be forwarded to the Contracting Officer who will determine if the existing caisson should be removed, or if an alternate caisson design must be implemented.

3.2 INSTALLATION

Concrete shall be continuously placed by methods that ensure against

segregation and dislodging of excavation sidewalls, and shall completely fill the shaft. Concrete shall be placed by pumping or drop chutes in dry holes and by tremie or pumping in wet holes. The discharge shall be kept a minimum of 3 feet below the fresh concrete surface during placement. Drilling of caissons or driving of casings shall not occur within 20 feet of concrete placed within the last 3 days.

Concrete shall be brought to a true level surface inside the shaft and a full width cross key formed, or dowels installed, should it become necessary to interrupt placing concrete in any caisson. Prior to placing additional concrete, surfaces shall be cleaned of laitance and slushed with one-to-one Portland cement grout. The grout shall have a water-cement ratio not exceeding that of the concrete.

Concrete shall be vibrated for full height of caisson.

3.3 TOLERANCES

Any caisson out of center or plumb beyond the tolerance specified shall be corrected as required by the Contracting Officer to comply with the tolerances and the Contractor shall bear all cost of correction.

Cross sections of shafts shall not be less than design dimensions.

Caissons shall be installed with the center of the top deviating no more than 3 inches from required centerline locations.

Vertical caissons shall be installed plumb within a maximum of 1-1/2 inches for the first 10 feet and within l/2 inch for each 10 feet of additional depth.

Caisson bearing surfaces shall be roughly hewn rock leveled to within a slope of 1 vertical to 12 horizontal over the entire shaft diameter.

Reinforcing steel shall be placed in accordance with the requirements of Section 03200 CONCRETE REINFORCEMENT.

3.4 PROOF TEST HOLE REQUIREMENTS

Rock Soundness test shall conform to the following:

a. After excavation, the rock below each caisson bearing level shall be proof tested for soundness by percussion or rotary core drilling one hole in caisson in locations as directed by the Contracting Officer.

b. Holes shall be of 2 inch diameter and drilled with a uniform downward pressure to a depth below the bearing level equal to the design caisson shaft diameter but to a minimum of 4 feet.

c. Penetration time for successive 6 inch increments shall be recorded, noting conditions encountered.

d. Proof test holes that encounter voids in the rock below caisson

bearing level shall be reported to the Contracting Officer and work on the affected caisson suspended until conditions and drilling record are reviewed and direction provided by the Contracting Officer.

The Contracting Officer will approve test holes and authorize subsequent concrete placement or provide direction otherwise.

3.5 PROTECTION

Protection shall be provided around top of the excavation to prevent debris from being dislodged into the excavation and concrete.

a. The Contractor shall submit for approval by the Contracting Officer the proposed protection procedures.

b. Any debris falling into the excavation shall be removed and deleterious conditions corrected before proceeding with further work.

c. Any debris falling into concrete in the process of being placed or freshly placed shall be cause for rejection of the caisson. The Contractor shall bear all removal and replacement cost of such rejected caisson.

-- End of Section --

SECTION 02511

CONCRETE SIDEWALKS AND CURBS AND GUTTERS

PART 1 GENERAL

1.1 REFERENCES

The publications listed below form a part of this specification to the extent referenced. The publications are referred to in the text by basic designation only.

AMERICAN ASSOCIATION OF STATE HIGHWAY AND TRANSPORTATION OFFICIALS (AASHTO)

AASHTO M 182	(1991) Burlap Cloth Made from Jute or Kenaf

AMERICAN SOCIETY FOR TESTING AND MATERIALS (ASTM)

ASTM C 31	(1991) Making and Curing Concrete Test Specimens in the Field
ASTM C 131	(1996) Test Method for Resistance to Degradation of Small-Size Coarse Aggregate by Abrasion and Impact in the Los Angelas Machine
ASTM C 143	(1990a) Slump of Hydraulic Cement Concrete
ASTM C 171	(1991) Sheet Materials for Curing Concrete
ASTM C 172	(1990) Sampling Freshly Mixed Concrete
ASTM C 173	(1978) Air Content of Freshly Mixed Concrete by the Volumetric Method
ASTM C 231	(1991b) Air Content of Freshly Mixed Concrete by the Pressure Method
ASTM C 309	(1991) Liquid Membrane-Forming Compounds for Curing Concrete
ASTM C 615	(1999) Specification for Granite Dimension Stone
ASTM D 1751	(1983; R 1991) Preformed Expansion Joint Filler for Concrete Paving and Structural Construction (Nonextruding and Resilient Bituminous Types)

ASTM D 1752	(1984; R 1992) Preformed Sponge Rubber and Cork Expansion Joint Fillers for Concrete Paving and Structural Constructio

1.2 SUBMITTALS

Government approval is required for submittals with a "GA" designation; submittals having an "FIO" designation are for information only. Unless otherwise indicated, primary reviewer for these submittals will be the Civil Engineering Consultant. The following shall be submitted in accordance with Section 01330 SUBMITTAL PROCEDURES:

SD-01 Data

Granite Curb; GA.

Submit product data for granite curb, indicating color, quarry, sizes and shapes.

SD-13 Certificates

Concrete; GA.

Copies of certified delivery tickets for all concrete used in the construction.

1.3 WEATHER LIMITATIONS

1.3.1 Placing During Cold Weather

Concrete placement shall be discontinued when the air temperature reaches 40 degrees F and is falling. Placement may begin when the air temperature reaches 35 degrees F and is rising. Provisions shall be made to protect the concrete from freezing during the specified curing period. If necessary to place concrete when the temperature of the air, aggregates, or water is below 35 degrees F, placement shall be approved in writing. Approval shall be contingent upon full conformance with the following provisions. The underlying material shall be prepared and protected so that it is entirely free of frost when the concrete is deposited. Mixing water and aggregates shall be heated as necessary to result in the temperature of the in-place concrete being between 50 and 85 degrees F. Methods and equipment for heating shall be approved. The aggregates shall be free of ice, snow, and frozen lumps before entering the mixer. Covering and other means shall be provided for maintaining the concrete at a temperature of at least 50 degrees F for not less than 72 hours after placing, and at a temperature above freezing for the remainder of the curing period.

1.3.2 Placing During Warm Weather

The temperature of the concrete as placed shall not exceed 85 degrees F except where an approved retarder is used. The mixing water and/or aggregates shall be cooled, if necessary, to maintain a satisfactory placing temperature. In no case shall the placing temperature exceed 95

degrees F.

1.4 PLANT, EQUIPMENT, MACHINES, AND TOOLS

1.4.1 General Requirements

Plant, equipment, machines, and tools used in the work shall be subject to approval and shall be maintained in a satisfactory working condition at all times. The equipment shall have the capability of producing the required product, meeting grade controls, thickness control and smoothness requirements as specified. Use of the equipment shall be discontinued if it produces unsatisfactory results. The Contracting Officer shall have access at all times to the plant and equipment to ensure proper operation and compliance with specifications.

PART 2 PRODUCTS

2.1 GRANITE CURB

Granite shall be a structural granite conforming to ASTM C 615, Class I Engineering Grade, suitable for curbstone use. Curb shall be light grey, free from seams which impair structural integrity, and with percentage of wear less than 32%, as determined by ASTM C 131.

1. Granite curb shall have the following dimensions: minimum length = 6 ft., width at top = 6 in., depth = 17-19 in.

2. Top surface shall be free from wind, shall be peen hammered to an approximately true plane, and shall have no projections or depressions greater than 1/8 in.

3. Front and back arris lines shall be be pitched straight and true, and there shall be no projection on the back surface for 3 in. down from the top which would exceed a batter of 4 in. in 1 ft.

4. Front face shall be at right angles to the planes of the top and ends, and shall be smooth quarry split, free from drill holes and with no projection of more than 1 in. and no depression of more than 1/2 in. measured from the vertical plane of the face through the arris pitch line for a distance down from the top of 8 in.. For the remaining distance there shall be no projection or depression greater than 1 in. measured in the same manner.

5. The ends of the stone shall be squared with the planes of the top and face so that when the stones are placed end to end as closely as possible, no space shall show in the joint at the top and face of more than 1/2 in. for the full width of the top and for 8 in. down on the face, after which the the end may break back not over 8 in. from the plane of the joint. The arris formed by the intersection of the plane of the joint with the planes of the top and exposed faces shall have no variation from the plane of the top and exposed faces greater than 1/8 in.

2.2 CONCRETE

Concrete shall conform to the applicable requirements of Section 03300 CAST-IN-PLACE STRUCTURAL CONCRETE except as otherwise specified. Concrete shall have a minimum compressive strength of 3000 psi at 28 days. Maximum size of aggregate shall be 3/4 inches.

2.2.1 Air Content

Mixtures may have air content by volume of concrete of 5 to 7 percent, based on measurements made immediately after discharge from the mixer.

2.2.2 Slump

The concrete slump shall be 1 to 2 inches where determined in accordance with ASTM C 143.

2.3 CONCRETE CURING MATERIALS

2.3.1 Impervious Sheet Materials

Impervious sheet materials shall conform to ASTM C 171, type optional, except that polyethylene film, if used, shall be white opaque.

2.3.2 Burlap

Burlap shall conform to AASHTO M 182.

2.3.3 White Pigmented Membrane-Forming Curing Compound

White pigmented membrane-forming curing compound shall conform to ASTM C 309, Type 2.

2.4 CONCRETE PROTECTION MATERIALS

Concrete protection materials shall be a linseed oil mixture of equal parts, by volume, of linseed oil and either mineral spirits, naphtha, or turpentine. At the option of the contractor, commercially prepared linseed oil mixtures, formulated specifically for application to concrete to provide protection against the action of deicing chemicals may be used, except that emulsified mixtures are not acceptable.

2.5 JOINT FILLER STRIPS

2.5.1 Contraction Joint Filler for Curb and Gutter

Contraction joint filler for curb and gutter shall consist of hard-pressed fiberboard.

2.5.2 Expansion Joint Filler, Premolded

Expansion joint filler, premolded, shall conform to ASTM D 1751 or ASTM D 1752, 1/2 inch thick, unless otherwise indicated.

2.6 FORM WORK

2.6.1 Sidewalk Forms

Sidewalk forms shall be of a height equal to the full depth of the finished sidewalk.

2.6.2 Curb and Gutter Forms

Curb and gutter outside forms shall have a height equal to the full depth of the curb or gutter. The inside form of curb shall have batter as indicated and shall be securely fastened to and supported by the outside form. Rigid forms shall be provided for curb returns, except that benders or thin plank forms may be used for curb or curb returns with a radius of 10 feet or more, where grade changes occur in the return, or where the central angle is such that a rigid form with a central angle of 90 degrees cannot be used. Back forms for curb returns may be made of 1-1/2 inch benders, for the full height of the curb, cleated together.

2.7 REINFORCEMENT

Reinforcement shall conform to applicable requirements of Section 03200 CONCRETE REINFORCMENT.

PART 3 EXECUTION

3.1 SUBGRADE PREPARATION

The subgrade shall be constructed to the specified grade and cross section prior to concrete placement. Subgrade shall be placed and compacted to conform with applicable requirements of Section 02551 and 02221.

3.1.1 Sidewalk Subgrade

The subgrade shall be tested for grade and cross section with a template extending the full width of the sidewalk and supported between side forms.

3.1.2 Curb and Gutter Subgrade

The subgrade shall be tested for grade and cross section by means of a template extending the full width of the curb and gutter. The subgrade shall be of materials equal in bearing quality to the subgrade under the adjacent pavement.

3.1.3 Maintenance of Subgrade

The subgrade shall be maintained in a smooth, compacted condition in conformity with the required section and established grade until the concrete is placed. The subgrade shall be in a moist condition when concrete is placed. The subgrade shall be prepared and protected so as to produce a subgrade free from frost when the concrete is deposited.

3.2 FORM SETTING

3.2.1 Sidewalks

Forms for sidewalks shall be set with the upper edge true to line and grade with an allowable tolerance of 1/8 inch in any 10-foot long section. After forms are set, grade and alignment shall be checked with a 10-foot straightedge. Forms shall have a transverse slope 1/4-inch per foot with the low side adjacent to the roadway. Side forms shall not be removed for 12 hours after finishing has been completed.

3.2.2 Concrete Curbs and Gutters

The forms of the front of the curb shall be removed not less than 2 hours nor more than 6 hours after the concrete has been placed. Forms back of curb shall remain in place until the face and top of the curb have been finished as specified for concrete finishing. Gutter forms shall not be removed while the concrete is sufficiently plastic to slump in any direction.

3.3 SIDEWALK CONCRETE PLACEMENT AND FINISHING

3.3.1 Formed Sidewalks

Concrete shall be placed in the forms in one layer of such thickness that when consolidated and finished the sidewalks will be of the thickness indicated. After concrete has been placed in the forms, a strike-off guided by side forms shall be used to bring the surface to proper section to be compacted. The concrete shall be consolidated with an approved vibrator, and the surface shall be finished to grade with a wood float, bull float, or darby, edged and broom finished.

3.3.2 Concrete Finishing

After straight edging, when most of the water sheen has disappeared, and just before the concrete hardens, the surface shall be finished to a smooth and uniformly fine granular or sandy texture free of waves, irregularities, or tool marks. A scored surface shall be produced by brooming with a fiber-bristle brush in a direction transverse to that of the traffic.

3.3.3 Edge and Joint Finishing

All slab edges, including those at formed joints, shall be finished carefully with an edger having a radius of 1/8 inch.Transverse joint shall be edged before brooming, and the brooming shall eliminate the flat surface left by the surface face of the edger. Corners and edges which have crumbled and areas which lack sufficient mortar for proper finishing shall be cleaned and filled solidly with a properly proportioned mortar mixture and then finished.

3.3.4 Surface and Thickness Tolerances

Finished surfaces shall not vary more than 5/16 inch from the testing edge of a 10-footstraightedge. Permissible deficiency in section thickness will be up to 1/4 inch.

3.4 CURB AND GUTTER CONCRETE PLACEMENT AND FINISHING

3.4.1 Formed Curb and Gutter

Concrete shall be placed to the section required in a single lift. Consolidation shall be achieved by using approved mechanical vibrators.

3.4.2 Concrete Finishing

Exposed surfaces shall be floated and finished with a smooth wood float until true to grade and section and uniform in texture. Floated surfaces shall then be brushed with a fine-hair brush with longitudinal strokes. The edges of the gutter and top of the curb shall be rounded with an edging tool to a radius of 1/2 inch. Immediately after removing the front curb form, the face of the curb shall be rubbed with a wood or concrete rubbing block and water until blemishes, form marks, and tool marks have been removed. The front curb surface, while still wet, shall be brushed in the same manner as the gutter and curb top. The top surface of gutter and entrance shall be finished to grade with a wood float.

3.4.3 Joint Finishing

Curb edges at formed joints shall be finished as indicated.

3.4.4 Surface and Thickness Tolerances

Finished surfaces shall not vary more than 1/4 inch from the testing edge of a 10-footstraightedge. Permissible deficiency in section thickness will be up to 1/4 inch.

3.5 SIDEWALK JOINTS

Sidewalk joints shall be constructed to divide the surface into rectangular areas. Transverse contraction joints shall be spaced at a distance equal to the sidewalk width or 5 feet on centers, whichever is less, and shall be continuous across the slab. Longitudinal contraction joints shall be constructed along the centerline of all sidewalks 10 feet or more in width. Transverse expansion joints shall be installed at sidewalk returns and opposite expansion joints in adjoining curbs. Where the sidewalk is not in contact with the curb, transverse expansion joints shall be installed as indicated at intervals not exceeding 30 ft. Expansion joints shall be formed about structures and features which project through or into the sidewalk pavement, using joint filler of the type, thickness, and width indicated.

3.5.1 Contraction Joints

The contraction joints shall be formed in the fresh concrete by cutting a groove in the top portion of the slab to a depth of at least one-fourth of the sidewalk slab thickness, using a jointer to cut the groove, or by sawing a groove in the hardened concrete with a power-driven saw, unless otherwise approved. Sawed joints shall be constructed by sawing a groove in the concrete with a 1/8-inch blade to the depth indicated. An ample supply of saw blades shall be available on the job before concrete placement is started, and at least one standby sawing unit in good working order shall be available at the jobsite at all times during the sawing

operations.

3.5.2 Expansion Joints

Expansion joints shall be formed with 1/2 inch joint filler strips. Joint filler shall be placed with top edge 1/4 inch below the surface and shall be held in place with steel pins or other devices to prevent warping of the filler during floating and finishing. Immediately after finishing operations are completed, joint edges shall be rounded with an edging tool having a radius of 1/8 inch, and concrete over the joint filler shall be removed. At the end of the curing period, expansion joints shall be carefully cleaned.

3.6 CURB AND GUTTER JOINTS

Curb and gutter joints shall be constructed at right angles to the line of curb and gutter.

3.6.1 Contraction Joints

Contraction joints shall be constructed directly opposite contraction joints in abutting portland cement concrete pavements and spaced so that monolithic sections between curb returns will not be less than 5 feet nor greater than 15 feet in length. Contraction joints shall be constructed by means of 1/8-inch thick separators and of a section conforming to the cross section of the curb and gutter. Separators shall be removed as soon as practicable after concrete has set sufficiently to preserve the width and shape of the joint and prior to finishing.

3.6.2 Expansion Joints

Expansion joints shall be formed by means of preformed expansion joint filler material cut and shaped to the cross section of curb and gutter. Expansion joints shall be provided in curb and gutter directly opposite expansion joints of abutting portland cement concrete pavement, and shall be of the same type and thickness as joints in the pavement. Where curb and gutter do not abut portland cement concrete pavement, expansion joints at least 1/2 inch in width shall be provided at intervals not exceeding 30 feet.

3.7 CURING AND PROTECTION

3.7.1 General Requirements

Concrete shall be protected against loss of moisture and rapid temperature changes for at least 7 days from the beginning of the curing operation. Unhardened concrete shall be protected from rain and flowing water. All equipment needed for adequate curing and protection of the concrete shall be on hand and ready for use before actual concrete placement begins. Protection shall be provided as necessary to prevent cracking of the pavement due to temperature changes during the curing period.

3.7.1.1 Mat Method

The entire exposed surface shall be covered with two or more layers of burlap. Mats shall overlap each other at least 6 inches.The mat shall be thoroughly wetted with water prior to placing on concrete surface and shall be kept continuously in a saturated condition and in intimate contact with concrete for not less than 7 days.

3.7.1.2 Impervious Sheeting Method

The entire exposed surface shall be wetted with a fine spray of water and then covered with impervious sheeting material. Sheets shall be laid directly on the concrete surface with the light-colored side up and overlapped 12 inches when a continuous sheet is not used. The curing medium shall not be less than 18-inches wider than the concrete surface to be cured, and shall be securely weighted down by heavy wood planks, or a bank of moist earth placed along edges and laps in the sheets. Sheets shall be satisfactorily repaired or replaced if torn or otherwise damaged during curing. The curing medium shall remain on the concrete surface to be cured for not less than 7 days.

3.7.1.3 Membrane Curing Method

A uniform coating of white-pigmented membrane-curing compound shall be applied to the entire exposed surface of the concrete as soon after finishing as the free water has disappeared from the finished surface. Formed surfaces shall be coated immediately after the forms are removed and in no case longer than 1 hour after the removal of forms. Concrete shall not be allowed to dry before the application of the membrane. If any drying has occurred, the surface of the concrete shall be moistened with a fine spray of water and the curing compound applied as soon as the free water disappears. Curing compound shall be applied in two coats by hand-operated pressure sprayers at a coverage of approximately 200 square feet per gallon for both coats. The second coat shall be applied in a direction approximately at right angles to the direction of application of the first coat. The compound shall form a uniform, continuous, coherent film that will not check, crack, or peel and shall be free from pinholes or other imperfections. If pinholes, abrasion, or other discontinuities exist, an additional coat shall be applied to the affected areas within 30 minutes. Concrete surfaces that are subjected to heavy rainfall within 3 hours after the curing compound has been applied shall be resprayed by the method and at the coverage specified above. Areas where the curing compound is damaged by subsequent construction operations within the curing period shall be resprayed. Necessary precautions shall be taken to insure that the concrete is properly cured at sawed joints, and that no curing compound enters the joints. The top of the joint opening and the joint groove at exposed edges shall be tightly sealed before the concrete in the region of the joint is resprayed with curing compound. The method used for sealing the joint groove shall prevent loss of moisture from the joint during the entire specified curing period. Approved standby facilities for curing concrete pavement shall be provided at a location accessible to the jobsite for use in the event of mechanical failure of the spraying equipment or other conditions that might prevent correct application of the membrane-curing compound at the proper time. Concrete surfaces to which membrane-curing compounds have been applied shall be adequately protected during the entire curing period from pedestrian and vehicular traffic,

except as required for joint-sawing operations and surface tests, and from any other possible damage to the continuity of the membrane.

3.7.2 Backfilling

After curing, debris shall be removed and the area adjoining the concrete shall be backfilled, graded, and compacted to conform to the surrounding area in accordance with lines and grades indicated.

3.7.3 Protection

Completed concrete shall be protected from damage until accepted. The Contractor shall repair damaged concrete and clean concrete discolored during construction. Concrete that is damaged shall be removed and reconstructed for the entire length between regularly scheduled joints. Refinishing the damaged portion will not be acceptable. Removed damaged portions shall be disposed of as directed.

3.7.4 Protective Coating

Protective coating of linseed oil mixture shall be applied to the exposed-to-view concrete surface.

3.7.4.1 Application

Curing and backfilling operation shall be completed prior to applying protective coating. Concrete shall be surface dry and thoroughly clean before each application. Coverage shall be not more than 50 square yards per gallon for first application and not more than 70 square yards per gallon for second application, except that the number of applications and coverage for each application for commercially prepared mixture shall be in accordance with the manufacturer's instructions. Coated surfaces shall be protected from vehicular and pedestrian traffic until dry.

3.7.4.2 Precautions

Protective coating shall not be heated by direct application of flame or electrical heaters and shall be protected from exposure to open flame, sparks, and fire adjacent to open containers or applicators. Material shall not be applied at temperatures lower than 50 degrees F.

3.8 GRANITE CURB SETTING

Curb shall be set in an 18 in. wide trench, as indicated on the Drawings.

Vertical face of vertical curb shall be plumb, with curb top parallel to adjacent surface.

Curb shall be set accurately to line and grade. Curb units shall be fitted together as closely as possible, field cutting of granite curb will be allowed to make adjustments in the field.

Joints, between curb units shall be carefully filled with a cement mortar, and neatly pointed on the top and front exposed portions. After pointing

excess mortar shall be cleaned from curb surface.

Backfill material on each side of curb shall be as indicated. Extreme care shall be taken not to destroy alignment. Curb sections disturbed during backfilling or otherwise shall be reset to line and grade, and properly backfilled.

3.9 FIELD QUALITY CONTROL

3.9.1 General Requirements

The Contractor shall perform the inspection and tests described and meet the specified requirements for inspection details and frequency of testing. Based upon the results of these inspections and tests, the Contractor shall take the action and submit reports as required below, and any additional tests to insure that the requirements of these specifications are met.

3.9.2 Concrete Testing

3.9.2.1 Strength Testing

The Contractor shall provide molded concrete specimens for strength tests. Samples of concrete placed each day shall be taken not less than once a day nor less than once for every 250 cubic yards of concrete. The samples for strength tests shall be taken in accordance with ASTM C 172. Cylinders for acceptance shall be molded in conformance with ASTM C 31 by an approved testing laboratory. Each strength test result shall be the average of two test cylinders from the same concrete sample tested at 28 days, unless otherwise specified or approved. Concrete specified on the basis of compressive strength will be considered satisfactory if the averages of all sets of three consecutive strength test results equal or exceed the specified strength, and no individual strength test result falls below the specified strength by more than 500 psi.

3.9.2.2 Air Content

Air content shall be determined in accordance with ASTM C 173 or ASTM C 231. ASTM C 231 shall be used with concretes and mortars made with relatively dense natural aggregates. One test for air content shall be made on randomly selected batches of each class of concrete placed during each day. Additional tests shall be made when excessive variation in concrete workability is reported by the placing foreman or the Government inspector. If results are out of tolerance, the placing foreman shall be notified and he shall take appropriate action to have the air content corrected at the plant. Additional tests for air content will be performed on each truckload of material until such time as the air content is within the tolerance specified.

3.9.2.3 Slump Test

Two slump tests shall be made on randomly selected batches of each class of concrete for every 250 cubic yards, or fraction thereof, of concrete placed during each shift. Additional tests will be performed when excessive

variation in the workability of the concrete is noted or when excessive crumbling or slumping is noticed along the edges of slip-formed concrete.

3.9.3 Surface Evaluation

The finished surface of each category of the completed work shall be uniform in color and free of blemishes and form or tool marks.

3.10 SURFACE DEFICIENCIES AND CORRECTIONS

3.10.1 Thickness Deficiency

When measurements indicate that the completed concrete section is deficient in thickness by more than 1/4 inch the deficient section shall be removed, between regularly scheduled joints, and replaced.

3.10.2 High Areas

In areas not meeting surface smoothness and plan grade requirements, high areas shall be reduced either by rubbing the freshly finished concrete with carborundum brick and water when the concrete is less than 36 hours old or by grinding the hardened concrete with an approved surface grinding machine after the concrete is 36 hours old or more. The area corrected by grinding the surface of the hardened concrete shall not exceed 5 percent of the area of any integral slab, and the depth of grinding shall not exceed 1/4 inch. All pavement areas requiring grade or surface smoothness corrections in excess of the limits specified above shall be removed and replaced.

3.10.3 Appearance

Exposed surfaces of the finished work will be inspected by the Government and any deficiencies in appearance will be identified. Areas which exhibit excessive cracking, discoloration, form marks, or tool marks or which are otherwise inconsistent with the overall appearances of the work shall be removed and replaced.

-- End of Section --

SECTION 02531

SANITARY SEWERS

PART 1 GENERAL

1.1 REFERENCES

The publications listed below form a part of this specification to the extent referenced. The publications are referred to in the text by basic designation only.

AMERICAN SOCIETY FOR TESTING AND MATERIALS (ASTM)

ASTM A 74	(1996) Cast Iron Soil Pipe and Fittings
ASTM A 123	(1989a) Zinc (Hot-Dip Galvanized) Coatings on Iron and Steel Products
ASTM C 33	(1993) Concrete Aggregates
ASTM C 94	(1996) Ready-Mixed Concrete
ASTM C 150	(1997) Portland Cement
ASTM C 270	(1997) Mortar for Unit Masonry
ASTM C 478	(1996) Precast Reinforced Concrete Manhole Sections
ASTM C 564	(1995a) Rubber Gaskets for Cast Iron Soil Pipe and Fittings
ASTM C 828	(1991, R 1996) Low-Pressure Air Test of Vitrified Clay Pipe Lines
ASTM C 924	(1989) Concrete Pipe Sewer Lines by Low-Pressure Air Test Method
ASTM D 412	(1992) Vulcanized Rubber and Thermoplastic Rubbers and Thermoplastic Elastomers - Tension
ASTM D 624	(1991; R 1996) Tear Strength of Conventional Vulcanized Rubber and Thermoplastic Elastomers
ASTM D 3212	(1996a) Specifications for Joints for Drain and Sewer Plastic Pipes Using Flexible Elastomeric Seals

AMERICAN WATER WORKS ASSOCIATION (AWWA)

AWWA ANSI/AWWA C105/A21.5	(1993) Polyethylene Encasement for Ductile-Iron Pipe Systems

UNI-BELL PVC PIPE ASSOCIATION (UBPPA)

UBPPA UNI-B-6	(1990) Recommended Practice for the Low-Pressure Air Testing of Installed Sewer Pip

1.2 GENERAL REQUIREMENTS

The construction required herein shall include appurtenant structures and building sewers to points of connection with the building sanitary sewer 5 feet outside the building to which the sewer system is to be connected. The Contractor shall replace damaged material and redo unacceptable work at no additional cost to the Government. Excavation and backfilling is specified in Section 02222ROCK EXCAVATION and Section 02316 EXCAVATION, TRENCHING, AND BACKFILLING FOR UTILITIES SYSTEMS. Backfilling shall be accomplished after inspection by the Contracting Officer. Before, during, and after installation, pipe and fittings shall be protected from any environment that would result in damage or deterioration to the material. The Contractor shall have a copy of the manufacturer's instructions available at the construction site at all times and shall follow these instructions unless directed otherwise by the CQCM. Solvents, solvent compounds, lubricants, elastomeric gaskets, and any similar materials required to install the pipe shall be stored in accordance with the manufacturer's recommendation.

1.3 MEASUREMENT AND PAYMENT

All payments will be based on the lump sum price for the completed work performed in accordance with the drawings, specifications, and the contract payment schedules. No payment will be made under this section for excavation, backfilling, or grading. Payment for such work will be made under Section 02316 EXCAVATION, TRENCHING, AND BACKFILLING FOR UTILITIES SYSTEMS.

1.4 SUBMITTALS

Government approval is required for submittals with a "GA" designation; submittals having an "FIO" designation are for information only. The following shall be submitted in accordance with Section 01330 SUBMITTAL PROCEDURES:

SD-13 Certificates

Portland Cement; FIO.

Certificates of compliance stating the type of cement used in manufacture of concrete pipe, fittings and precast manholes.

Joints.

Certificates of compliance stating that the fittings or gaskets used for waste drains or lines designated on the plans as oil resistant.

PART 2 PRODUCTS

2.1 PIPE

Pipe shall conform to the respective specifications and other requirements specified below.

2.1.1 PVC Pipe and Fittings

Polyvinyl chloride (PVC) non-pressure pipe shall conform to ASTM D 3034, SDR35.

2.1.2 Cast Iron Soil Pipe

Cast iron soil pipe shall conform to ASTM A 74, Class SV. When installed underground, pipe shall be encased with polyethylene in accordance with AWWA ANSI/AWWA C105/A21.5.

2.2 REQUIREMENTS FOR FITTINGS

Fittings shall be compatible with the pipe supplied and shall have a strength not less than that of the pipe. Fittings shall conform to the respective specifications and other requirements specified below.

2.2.1 PVC Fittings

PVC fittings shall be bell & spigot type compatible with the pipe. Rubber rings shall conform to ASTM D 3212 and shall be factory installed.

2.2.2 Fittings for Cast Iron Soil Pipe

ASTM A 74.

2.3 JOINTS

Joints installation shall comply with the manufacturer's instructions. Fittings and gaskets utilized for waste drains or industrial waste lines shall be certified by the manufacturer as oil resistant.

2.3.1 Cast Iron Soil Pipe Jointing

Rubber gaskets for compression joints shall conform to ASTM C 564. Packing material for caulked joints shall be twisted jute or oakum, tarred type, or asphalt-saturated cellulose-fiber. The packing shall not contain material which would affect adhesion of the joint sealing material to the pipe. Lead shall be suitable for caulking of joints.

2.3.2 Joint Adapters (Flexible Sewer Coupling)

Adapters for connecting unlike materials shall conform to applicable parts of ASTM C 564 and shall be approved by the Contracting Officer.

2.4 BRANCH CONNECTIONS

Branch connections shall be regular fittings.

2.5 FRAMES AND COVERS

Frames and covers shall be cast iron, or ductile iron. Cast iron frames and covers shall be as indicated or shall be of type suitable for the application, circular, without vent holes. The word "Sanitary" shall be stamped or cast into covers so that it is plainly visible. All covers shall be designed for HS-20 loading.

2.6 STEEL LADDER/RUNGS

A steel ladder or steps shall be provided where the depth of a manhole exceeds 4 feet. The ladder shall not be less than 16 inches in width, with 3/4 inch diameter rungs spaced 12 inches apart. The two stringers shall be a minimum 3/8 inch thick and 2 inches wide. Ladders and inserts shall be galvanized after fabrication in conformance with ASTM A 123.

2.6.1 Manhole Rungs

Manhole rungs shall be either extruded aluminum, conforming to Fed. Spec. QQ-A-200/8, or polypropylene plastic reinforced with 3/8 in. diameter steel rod as manufactured by M.A. Industries, Peachtree, GA, or approved equal.

a. Steps shall be drop-front, anti-skid design, 12 in. wide. Projection of front edge of step shall be greater than or equal to 5 in. from manhole wall.

b. Steps shall be embedded 4 in. into manhole wall. Those portions of aluminum steps to be embedded in manhole wall shall receive a heavy coat of heavy-bodied bituminous paint. Coating shall be thoroughly dry before steps are embedded in manhole.

c. Steps in precast sectrions shall be embedded at time of casting.

2.7 CEMENT MORTAR

Cement mortar shall conform to ASTM C 270, Type M with Type II cement.

2.7.1 Portland Cement

Portland cement shall conform to ASTM C 150, Type II for concrete used in manholes and type optional with the Contractor for cement used in concrete cradle, concrete encasement, and thrust blocking. Where aggregates are alkali reactive, as determined by Appendix XI of ASTM C 33, a cement containing less than 0.60 percent alkalies shall be used.

2.7.2 Portland Cement Concrete

Portland cement concrete shall conform to ASTM C 94, compressive strength of 4000 psi at 28 days, except for concrete cradle and encasement or concrete blocks for manholes. Concrete used for cradle and encasement shall have a compressive strength of 2500 psi minimum at 28 days. Cast in place concrete work shall conform to applicable requirements of Section 03300, CAST IN PLACE STRUCTURAL CONCRETE.

2.8 STRUCTURES

2.8.1 Precast Reinforced Concrete Manhole Sections

Precast reinforced concrete manhole sections shall conform to ASTM C 478, except that portland cement shall be as specified herein. Joints shall be cement mortar, an approved mastic, rubber gaskets, a combination of these types; or the use of external preformed rubber joint seals and extruded rolls of rubber with mastic adhesive on one side. Pipe shall be joined to precast base using either Lock Joint Flexible Manhole Sleeve manufactured by Lock Joint Concrete Pipe; or Press Wedge II, manufactured by Press-Seal Gasket Corp, or approved equal.

PART 3 EXECUTION

3.1 INSTALLATION

3.1.1 Adjacent Facilities

3.1.1.1 Water Lines

Where the location of the sewer is not clearly defined by dimensions on the drawings, the sewer shall not be closer horizontally than 10 feet to a water-supply main or service line, except that where the bottom of the water pipe will be at least 12 inches above the top of the sewer pipe, the horizontal spacing may be a minimum of 6 feet. Where gravity-flow sewers cross above water lines, the sewer pipe for a distance of 10 feet on each side of the crossing shall be fully encased in concrete or shall be acceptable pressure pipe with no joint closer horizontally than 3 feet to the crossing. The thickness of the concrete encasement including that at the pipe joints shall be not less than 4 inches.

3.1.2 Pipe Laying

a. Pipe shall be protected during handling against impact shocks and free fall; the pipe interior shall be free of extraneous material.

b. Pipe laying shall proceed upgrade with the spigot ends of bell-and-spigot pipe and tongue ends of tongue-and-groove pipe pointing in the direction of the flow. Each pipe shall be laid accurately to the line and grade shown on the drawings. Pipe shall be laid and centered so that the sewer has a uniform invert. As the work progresses, the interior of the sewer shall be cleared of all superfluous materials. Vertical dips greater than 3/8 inches will be rejected. The Contracting Officer will make sole determination that the alignments offset(s) are sufficient to reject the piping. The Contractor shall replace rejected pipe at

no additional cost to the Government.

c. Before making pipe joints, all surfaces of the portions of the pipe to be joined shall be clean and dry. Lubricants, primers, and adhesives shall be used as recommended by the pipe manufacturer. The joints shall then be placed, fitted, joined, and adjusted to obtain the degree of water tightness required.

3.1.2.1 Caulked Joints

The packing material shall be well packed into the annular space of cast iron pipe to prevent the entrance of lead into the pipe. The remainder of the space shall be filled with molten lead that is hot enough to show a rapid change in color when stirred. Scum shall be removed before pouring. The lead shall be caulked to form a tight joint without overstraining the bell and shall have a minimum depth of 1 inch after caulking.

3.1.2.2 Flexible WAtertight Joints

Gaskets and jointing materials shall be as recommended by the particular manufacturer in regard to use of lubricants, cements, adhesives, and other special installation requirements. Surfaces to receive lubricants, cements, or adhesives shall be clean and dry. Gaskets and jointing materials shall be affixed to the pipe not more than 24 hours prior to the installation of the pipe, and shall be protected from the sun, blowing dust, and other deleterious agents at all times. Gaskets and jointing materials shall be inspected before installing the pipe; any loose or improperly affixed gaskets and jointing materials shall be removed and replaced. The pipe shall be aligned with the previously installed pipe, and the joint pushed home. If, while the joint is being made the gasket becomes visibly dislocated the pipe shall be removed and the joint remade.

3.1.2.3 Trenches

Trenches shall be kept free of water and as dry as possible during bedding, laying, and jointing and for as long a period as required. When work is not in progress, open ends of pipe and fittings shall be satisfactorily closed so that no trench water or other material will enter the pipe or fittings.

3.1.2.4 Backfill

As soon as possible after the joint is made, sufficient backfill material shall be placed along the pipe to prevent pipe movement off line or grade. Plastic pipe shall be completely covered to prevent damage from ultraviolet light.

3.1.2.5 Width of Trench

If the maximum width of the trench at the top of the pipe, as called for on Drawings, is exceeded for any reason other than by direction, the Contractor shall install, at no additional cost to the Government, concrete cradling, pipe encasement, or other bedding required to support the added load of the backfill. Contractor shall submit design analysis performed by

New York State registered Professional Engineer for review and approval by Contracting Officer for remediation of wide trench.

3.1.2.6 Jointing

Joints between different pipe materials shall be made as specified, using approved pipe joint adapters.

3.1.2.7 Handling and Storage

Pipe, fittings and joint material shall be handled and stored in accordance with the manufacturer's recommendations.

3.1.3 Leakage Tests

Lines shall be tested for leakage by low pressure air testing, infiltration tests or exfiltration tests, as appropriate. Low pressure air testing for PVC pipe shall be as prescribed in UBPPA UNI-B-6. Low pressure air testing procedures for other pipe materials shall use the pressures and testing times prescribed in ASTM C 828 and ASTM C 924, after consultation with the pipe manufacturer. Prior to infiltration or exfiltration tests, the trench shall be backfilled up to at least the lower half of the pipe. If required, sufficient additional backfill shall be placed to prevent pipe movement during testing, leaving the joints uncovered to permit inspection. Visible leaks encountered shall be corrected regardless of leakage test results.

3.2 CONCRETE CRADLE AND ENCASEMENT

The pipe shall be supported on a concrete cradle, or encased in concrete where indicated or directed.

3.3 MANHOLE DETAILS

3.3.1 General Requirements

Manholes shall be constructed of concrete, or precast concrete manhole sections. The invert channels shall be smooth and semicircular in shape conforming to the inside of the adjacent sewer section. Changes in direction of flow shall be made with a smooth curve of as large a radius as the size of the manhole will permit. Changes in size and grade of the channels shall be made gradually and evenly. The invert channels shall be formed directly in the concrete of the manhole base, or shall be built up with brick and mortar, or shall be half tile laid in concrete. Pipe connections shall be made to manhole using water stops, standard O-ring joints, special manhole coupling, or shall be made in accordance with the manufacturer's recommendation. The Contractor's proposed method of connection, list of materials selected, and specials required, shall be approved by the Contracting Officer prior to installation. The floor of the manhole outside the channels shall be smooth and shall slope toward the channels not less than 1 inch per foot nor more than 2 inches per foot. Free drop inside the manholes shall not exceed 18 inches, measured from the invert of the inlet pipe to the top of the floor of the manhole outside the channels; drop manholes shall be constructed whenever the free drop

would otherwise be greater than 1 foot 6 inches.

3.3.2 Steel Ladder Anchorage

Ladder shall be adequately anchored to the wall by means of steel inserts spaced not more than 6 feet apart vertically, and shall be installed to provide at least 6 inches of space between the wall and the rungs. The wall along the line of the ladder shall be vertical for its entire length.

3.3.3 Manhole Rungs

Manhole rungs shgall be installed at time of casting precast sections.

3.3.4 Jointing, Plastering and Sealing

Mortar joints shall be completely filled and shall be smooth and free from surplus mortar on the inside of the manhole. Mortar and mastic joints between precast rings shall be full-bedded in jointing compound and shall be smoothed to a uniform surface on both the interior and exterior of the manhole. Installation of rubber gasket joints between precast rings shall be in accordance with the recommendations of the manufacturer. Precast rings may also be sealed by the use of extruded rolls of rubber with mastic adhesive on one side.

3.3.5 Setting of Frames and Covers

Unless otherwise indicated, tops of frames and covers shall be set flush with finished grade in paved areas or 2 inches higher than finished grade in unpaved areas. Frame and cover assemblies shall be sealed to manhole sections using external preformed rubber joint seals that meet the requirements of ASTM D 412 and ASTM D 624, unless otherwise specified.

3.4 CONNECTING TO EXISTING MANHOLES

Pipe connections to existing manholes shall be made so that finish work will conform as nearly as practicable to the applicable requirements specified for new manholes, including all necessary concrete work, cutting, and shaping. The connection shall be centered on the manhole. Holes for the new pipe shall be of sufficient diameter to allow packing cement mortar around the entire periphery of the pipe but no larger than 3 inches plus the outside diameter of the pipe and appurtenances. Cutting the manhole shall be done in a manner that will cause the least damage to the walls.

3.5 BUILDING CONNECTIONS

Building connections shall include the lines to and connection with the building waste drainage piping at a point approximately 5 feet outside the building, unless otherwise indicated. Where building drain piping is not installed, the Contractor shall terminate the building connections approximately 5 feet from the site of the building at a point and in a manner designated.

3.6 CLEANOUTS AND OTHER APPURTENANCES

Cleanouts and other appurtenances shall be installed where shown on the drawings or as directed by the Contracting Officer, and shall conform to the detail of the drawings.

-- End of Section --

SECTION 02551

BITUMINOUS PAVING FOR ROADS, STREETS AND OPEN STORAGE AREAS

PART 1 GENERAL

1.1 REFERENCES

The publications listed below form a part of this specification to the extent referenced. The publications are referred to in the text by basic designation only.

AMERICAN SOCIETY FOR TESTING AND MATERIALS (ASTM)

ASTM D 242	(1985; R 1990) Mineral Filler for Bituminous Paving Mixtures
ASTM D 946	(1982; R 1993) Penetration-Graded Asphalt Cement for Use in Pavement Constructio

1.2 SUBMITTALS

Government approval is required for submittals with a "GA" designation; submittals having an "FIO" designation are for information only. Unless otherwise indicated, primary reviewer for these submittals will be the Contracting Officer. The following shall be submitted in accordance with Section 01330 SUBMITTAL PROCEDURES:

SD-09 Reports

Bituminous Pavement; FIO.

Copies of test results.

Job Mix Formula; FIO

Submit job mix formulas for each mix specified.

Testing Laboratory; FIO

SD-13 Certificates

Prime Coat; FIO

Tack Coat; FIO

Asphaltic Cement; FIO

Mineral Filler; FIO

Aggregate; FIO

Sand; FIO

Submit NYSDOT Conformance Certificate for the items listed above.

PART 2 PRODUCTS

2.1 ASPHALTIC CONCRETE

Asphaltic concrete shall be a standard plant-mixed, hot-laid paving material for road work, consisting of clean, crushed rock aggregate, mineral filler, and asphalt conforming to NYSDOT Specification Section 403.

1. Binder or bottom course paving shall conform to NYSDOT Specification Section 403, Type 3, "Binder".

2. Top or wearing course shall conform to NYSDOT Specifications Section 403, Type 7F, "Top".

Complete job mix formula, listing quantities and pertinent ingredient properties, shall be submitted to and approved by Contracting Officer.

2.1.1 Mineral Filler

Mineral Filler shall conform to Section 703-8 NYSDOT standard specifications, and shall be in compliance with ASTM D 242.

2.1.2 Asphaltic Cement

Asphaltic Cement shall conform to Section 702 NYSDOT standard specifications, for material designation 702-0500, viscosity grade SAC-20, and it shall also be in compliance with ASTM D 946, penetration grade 60-70.

2.1.3 Aggregate

Aggregate shall conform to Section 401-2.03 NYSDOT standard specification.

2.1.4 Sand

Sand shall conform to Section 703-01 NYSDOT standard specifications.

2.1.5 Additives

The use of additives such as antistripping and antifoaming agents is subject to approval.

PART 3 EXECUTION

3.1 INSTALLATION

Unless otherwise specified herein, or indicated on the Drawings, work shall be in accordance with Section 400 Bituminous Pavements of the NYSDOT standard specifications.

-- End of Section --

SECTION 02580

PAVEMENT MARKINGS

PART 1 GENERAL

1.1 REFERENCES

The publications listed below form a part of this specification to the extent referenced. The publications are referred to in the text by basic designation only.

AMERICAN ASSOCIATION OF STATE HIGHWAY AND TRANSPORTATION OFFICIALS (AASHTO)

AASHTO M 248	(1991) Ready-Mixed White and Yellow Traffic Paints

1.2 SUBMITTALS

Government approval is required for submittals with a "GA" designation; submittals having an "FIO" designation are for information only. The following shall be submitted in accordance with Section 01330 SUBMITTAL PROCEDURES:

SD-01 Data

Equipment Lists; GA. Composition Requirements; GA

Lists of proposed equipment to be used in performance of construction work, including descriptive data, and notifications of proposed Contractor actions as specified in this section.

Data showing composition of all materials to be used in conjunction with the work of this Section.

Mixing, Thinning and Application; GA.

Manufacturer's current printed product description and Material Safety Data Sheets (MSDS) for each type paint/color proposed for use.

SD-09 Reports

Material Tests; FIO.

Certified copies of the test reports, prior to the use of the materials at the jobsite. Testing shall be performed in an approved independent laboratory.

SD-13 Certificates

Volatile Organic Compound (VOC) Content; FIO.

Certificate stating that the proposed pavement marking paint meets the VOC regulations of the local Air Pollution Control District having jurisdiction over the geographical area in which the project is located.

1.3 DELIVERY AND STORAGE

All materials shall be delivered and stored in sealed containers that plainly show the designated name, formula or specification number, batch number, color, date of manufacture, manufacturer's name, and directions, all of which shall be plainly legible at time of use.

1.4 EQUIPMENT

All machines, tools and equipment used in the performance of the work shall be approved and maintained in satisfactory operating condition. Equipment operating on roads and runways will display low speed traffic markings and traffic warning lights.

1.4.1 Paint Application Equipment

The equipment to apply paint to pavements shall be a self-propelled or mobile-drawn pneumatic spraying machine with suitable arrangements of atomizing nozzles and controls to obtain the specified results. The machine shall have a speed during application not less than 5 mph, and shall be capable of applying the stripe widths indicated, at the paint coverage rate specified in paragraph APPLICATION, and of even uniform thickness with clear-cut edges. The paint applicator shall have paint reservoirs or tanks of sufficient capacity and suitable gauges to apply paint in accordance with requirements specified. Tanks shall be equipped with suitable air-driven mechanical agitators. The spray mechanism shall be equipped with quick-action valves conveniently located, and shall include necessary pressure regulators and gauges in full view and reach of the operator. Paint strainers shall be installed in paint supply lines to insure freedom from residue and foreign matter that may cause malfunction of the spray guns. The paint applicator shall be readily adaptable for attachment of an air-actuated dispenser for the reflective media approved for use. Pneumatic spray guns shall be provided for hand application of paint in areas where the mobile paint applicator cannot be used.

1.4.2 Surface Preparation Equipment

1.4.2.1 Sandblasting Equipment

Sandblasting equipment shall include an air compressor, hoses, and nozzles of proper size and capacity as required for cleaning surfaces to be painted. The compressor shall be capable of furnishing not less than 150 cfm of air at a pressure of not less than 90 psi at each nozzle used, and shall be equipped with traps that will maintain the compressed air free of oil and water.

1.4.2.2 Waterblast Equipment

The water pressure shall be specified at 2600 psi at 140 degrees F in order to adequately clean the surfaces to be marked.

1.4.3 Traffic Controls

Suitable warning signs shall be placed near the beginning of the worksite and well ahead of the worksite for alerting approaching traffic from both directions. Small markers shall be placed along newly painted lines or freshly placed raised markers to control traffic and prevent damage to newly painted surfaces or displacement of raised pavement markers. Painting equipment shall be marked with large warning signs indicating slow-moving painting equipment in operation.

1.5 HAND-OPERATED, PUSH-TYPE MACHINES

All machines, tools, and equipment used in performance of the work shall be approved and maintained in satisfactory operating condition. Hand-operated push-type machines of a type commonly used for application of paint to pavement surfaces shall be acceptable for marking small streets and parking areas. Applicator machine shall be equipped with the necessary paint tanks and spraying nozzles, and shall be capable of applying paint uniformly at coverage specified. Sandblasting equipment shall be provided as required for cleaning surfaces to be painted. Hand-operated spray guns shall be provided for use in areas where push-type machines cannot be used.

PART 2 PRODUCTS

2.1 PAINT

The paint shall be homogeneous, easily stirred to smooth consistency, and shall show no hard settlement or other objectionable characteristics during a storage period of 6 months. Paint for roads and streets shall conform to AASHTO M 248, color as indicated. Pavement marking paints shall comply with applicable state and local laws enacted to ensure compliance with Federal Clean Air Standards. Paint materials shall conform to the restrictions of the local Air Pollution Control District.

PART 3 EXECUTION

3.1 SURFACE PREPARATION

Surfaces to be marked shall be thoroughly cleaned before application of the pavement marking material. Dust, dirt, and other granular surface deposits shall be removed by sweeping, blowing with compressed air, rinsing with water or a combination of these methods as required. Rubber deposits, surface laitance, existing paint markings, and other coatings adhering to the pavement shall be completely removed with scrapers, wire brushes, sandblasting, approved chemicals, or mechanical abrasion as directed. Areas of old pavement affected with oil or grease shall be scrubbed with several applications of trisodium phosphate solution or other approved detergent or degreaser, and rinsed thoroughly after each application. After cleaning, oil-soaked areas shall be sealed with cut shellac to prevent bleeding through the new paint. Pavement surfaces shall be allowed to dry, when

water is used for cleaning, prior to striping or marking. Surfaces shall be re-cleaned, when work has been stopped due to rain.

3.1.1 Pretreatment for Early Painting

Where early painting is required on rigid pavements, a pretreatment with an aqueous solution containing 3 percent phosphoric acid and 2 percent zinc chloride shall be applied to prepared pavement areas prior to painting.

3.1.2 Cleaning Existing Pavement Markings

In general, markings shall not be placed over existing pavement marking patterns. Existing pavement markings that are in good condition that interfere with or conflict with the newly applied marking patterns shall be removed. Deteriorated or obscured markings that are not misleading or confusing or interfere with the adhesion of the new marking material do not require removal. Whenever grinding, scraping, sandblasting or other operations are performed the work must be conducted in such a manner that the finished pavement surface is not damaged or left in a pattern that is misleading or confusing. When these operations are completed the pavement surface shall be blown off with compressed air to remove residue and debris resulting from the cleaning work.

3.2 APPLICATION

All pavement markings and patterns shall be placed as shown on the plans.

3.2.1 Paint

Paint shall be applied to clean, dry surfaces, and only when air and pavement temperatures are above 40 degrees F and less than 95 degrees F. Paint temperature shall be maintained within these same limits. New asphalt pavement surfaces and new Portland concrete cement shall be allowed to cure for a period of not less than 30 days before applications of paint. Paint shall be applied pneumatically with approved equipment at rate of coverage specified herein. The Contractor shall provide guide lines and templates as necessary to control paint application. Special precautions shall be taken in marking numbers, letters, and symbols. Edges of markings shall be sharply outlined.

Nonreflective Markings: Paint shall be applied evenly to the pavement surface to be coated at a rate of 105 plus or minus 5 square feet per gallon.

3.2.2 Drying

The maximum drying time requirements of the paint specifications will be strictly enforced to prevent undue softening of bitumen, and pickup, displacement, or discoloration by tires of traffic. If there is a delay in drying of the markings, painting operations shall be discontinued until cause of the slow drying is determined and corrected.

3.3 CLEAN-UP

Cleanup: At the end of each workday, remove empty cans, rags, rubbish, and other discarded paint materials from Project site and dispose of in a legal manner.

-- End of Section --

SECTION 02621

FOUNDATION DRAINAGE SYSTEM

PART 1 GENERAL

1.1 REFERENCES

The publications listed below form a part of this specification to the extent referenced. The publications are referred to in the text by basic designation only.

AMERICAN SOCIETY FOR TESTING AND MATERIALS (ASTM)

ASTM C 33	(1993) Concrete Aggregates
ASTM C 443	(1998) Joints for Circular Concrete Sewer and Culvert Pipe, Using Rubber Gaskets
ASTM C 564	(1997) Rubber Gaskets for Cast Iron Soil Pipe and Fittings
ASTM D 3034	(1994) Type PSM Poly(Vinyl Chloride) (PVC) Sewer Pipe and Fittings
ASTM D 3212	(1996a) Joints for Drain and Sewer Plastic Pipes Using Flexible Elastomeric Seals
ASTM F 758	(1993) Smooth-Wall Poly(Vinyl Chloride) (PVC) Plastic Underdrain Systems for Highway, Airport, and Similar Drainage
ASTM F 949	(1994) Poly(Vinyl Chloride) (PVC) Corrugated Sewer Pipe With a Smooth Interior and Fitting

1.2 SUBMITTALS

Government approval is required for submittals with a "GA" designation; submittals having an "FIO" designation are for information only. The following shall be submitted in accordance with Section 01330 SUBMITTAL PROCEDURES:

SD-13 Certificates

Materials; FIO.

Certifications from the manufacturers attesting that materials meet specification requirements.

SD-14 Samples

Materials; GA.

Two randomly selected samples of each type of pipe and fitting, prior to delivery of materials to the site.

1.3 DELIVERY, STORAGE AND HANDLING

Materials placed in storage shall be stored with protection from the weather, humidity and temperature variations, dirt and dust, or other contaminants. Plastic pipe shall not be exposed to direct sunlight for more than 6 months from time of manufacturer to installation.

PART 2 PRODUCTS

2.1 MATERIALS

Pipe for foundation drainage system shall be of the type and size indicated. Appropriate transitions, adapters, or joint details shall be used where pipes of different types or materials are connected. All adapters are subject to Contracting Officer approval.

2.1.1 Plastic Pipe

Plastic pipe shall contain ultraviolet inhibitor to provide protection from exposure to direct sunlight.

2.1.1.1 Polyvinyl Chloride (PVC) Pipe

ASTM F 758, Type PS 46, ASTM D 3034, or ASTM F 949 with a minimum pipe stiffness of 46 psi.

2.1.1.2 Circular Perforations in Plastic Pipe

Circular holes shall be cleanly cut, not more than 5/16 inch or less than 3/16 inch in diameter, and arranged in rows parallel to the longitudinal axis of the pipe. Perforations shall be approximately 3 inches apart, center-to-center, along rows. The rows shall be approximately 1-1/2 inches apart and arranged in a staggered pattern so that all perforations lie at the midpoint between perforations in adjacent rows. The rows shall be spaced over not more than 155 degrees of circumference. The spigot or tongue end of the pipe shall not be perforated for a length equal to the depth of the socket and perforations shall continue at uniform spacing over the entire length of the pipe. Manufacturer's standard perforated pipe which essentially meets these requirements may be used with prior approval of the Contracting Officer.

2.1.1.3 Slotted Perforations in Plastic Pipe

Circumferential slots shall be cleanly cut so as not to restrict the inflow of water and uniformly spaced along the length and circumference of the tubing. Width of slots shall not exceed 1/8 inchor be less than 1/32 inch. The length of individual slots shall not exceed 1-1/4 inches on 3

inch diameter tubing; 10 percent of the tubing inside nominal circumference on 4 to 8 inch diameter tubing; and 2-1/2 inches on 10 inch diameter tubing. Rows of slots shall be symmetrically spaced so that they are fully contained in quadrants of the pipe. Slots shall be centered in the valleys of the corrugations of profile wall pipe. The water inlet area shall be a minimum of 0.5 square inch per linear foot of tubing. Manufacturer's standard perforated pipe which essentially meets these requirements may be used with prior approval of the Contracting Officer.

2.1.2 Fittings (Couplings/Joint Adapters)

Fittings shall be of compatible materials for pipe, of corresponding weight and quality, and as specified herein. Adapters for connecting unlike materials shall conform to applicable parts of ASTM C 443 and ASTM C 564.

2.1.3 Cleanouts and Piping Through Walls

Cleanout pipe and fittings and piping through walls and footings shall be cast-iron soil pipe conforming with the requirements of Section 15400 PLUMBING, GENERAL PURPOSE.

2.1.4 Bedding and Pervious Backfill for Foundation Drains

Bedding and pervious backfill shall be coarse aggregate conforming to ASTM C 33, size number 67, 3/4 inch to #4.

2.1.5 Protective Covering for Pervious Backfill

Protective covering shall be fiberglass mat of lime borosilicate glass fibers. Fibers shall be 8 to 12 microns in average diameter, 2 to 4 inches in length, and bonded with phenol formaldehyde resin. Mat shall be roll type, nonperforated, water permeable, with thickness between 1/4 and 1/2 inch and density of 3/4 per square yard.

PART 3 EXECUTION

3.1 GENERAL REQUIREMENTS

3.1.1 Extent

Foundation drainage shall be furnished and installed as a complete system.

3.1.2 Outlet Connections

Foundation pipe shall be terminated as shown.

3.1.3 Drainage Lines

Drainage lines shall be constructed of perforated pipe.

3.1.4 Outlet Lines

Outlet lines shall be constructed of closed-joint nonperforated, nonporous pipe.

3.2 INSTALLATION

3.2.1 Excavation

Required excavation shall be in accordance with Section 02221 EXCAVATION, FILLING, AND BACKFILLING FOR BUILDINGS. Trenches shall be kept dry during installation of drainage system. Changes in direction of drain lines shall be made with 1/8 bends. Wye fittings shall be used at intersections.

3.2.2 Bedding

Graded bedding, minimum 6 inches in depth, shall be placed in the bottom of trench for its full width and length and compacted as specified prior to laying of foundation drain pipe. Each section shall rest firmly upon the bedding, through the entire length, with recesses formed for bell joints. Except for recesses for bell joints, the bedding shall fully support the lower quadrant of the pipe.

3.2.3 Pipe Laying

Drain lines shall be laid to true grades and alignment with a continuous fall in the direction of flow, but not less than 0.5% slope. Bells of pipe sections shall face upgrade. Interior of pipe shall be cleaned thoroughly before being laid. When drain lines are left open for connection to discharge lines, the open ends shall be temporarily closed and the location marked with wooden stakes. Perforated pipe shall be laid with perforations facing down. Any length that has had its grade or joints disturbed shall be removed and relaid at no additional cost to the Government. Piping with physical imperfections shall not be installed.

3.2.4 Jointing

3.2.4.1 PVC Pipe

PVC pipe joints shall be in accordance with ASTM D 3034, ASTM D 3212, or ASTM F 949.

3.2.5 Backfilling

After joints and connections have been inspected and approved by CQCM, the specified pervious backfill material shall be provided as indicated with required protective covering. The backfill shall be placed preventing displacement of or injury to the pipe. Backfill shall be compacted as specified in Section 02221 EXCAVATION,FILLING AND BACKFILLING FOR BUILDINGS.

3.2.6 Cleanouts

Cleanouts shall be provided in accordance with the requirements for waste pipe of Section 15400 PLUMBING, GENERAL PURPOSE or at locations indicated. Cleanouts not in walls, floor slabs, or in unpaved areas shall be set in 12 by 12 by 4 inch concrete blocks.

-- End of Section --

SECTION 02720

STORM-DRAINAGE SYSTEM

PART 1 GENERAL

1.1 REFERENCES

The publications listed below form a part of this specification to the extent referenced. The publications are referred to in the text by basic designation only.

AMERICAN ASSOCIATION OF STATE HIGHWAY AND TRANSPORTATION OFFICIALS (AASHTO)

AASHTO M 304	(1994) Poly(Vinyl Chloride) (PVC) Profile Wall Drain Pipe and Fittings Based on Controlled Inside Diameter

.

AMERICAN SOCIETY FOR TESTING AND MATERIALS (ASTM)

ASTM A 48	(1994a) Gray Iron Castings
ASTM A 123	(1989a) Zinc (Hot-Dip Galvanized) Coatings on Iron and Steel Products
ASTM C 32	(1993) Sewer and Manhole Brick (Made from Clay or Shale)
ASTM C 55	(1995) Concrete Building Brick
ASTM C 62	(1996) Building Brick (Solid Masonry Units Made from Clay or Shale)
ASTM C 139	(1995) Concrete Masonry Units for Construction of Catch Basins and Manholes
ASTM C 231	(1991b) Air Content of Freshly Mixed Concrete by the Pressure Method
ASTM C 270	(1996a) Mortar for Unit Masonry
ASTM C 443	(1998) Joints for Circular Concrete Sewer and Culvert Pipe, Using Rubber Gaskets
ASTM C 478	(1994) Precast Reinforced Concrete Manhole Sections
ASTM D 1557	(1991) Laboratory Compaction Characteristics of Soil Using Modified Effort (56,000 ft-lbf/cu. ft. (2,700

	kN-m/cu.m.))
ASTM D 1751	(1983; R 1991) Preformed Expansion Joint Filler for Concrete Paving and Structural Construction (Nonextruding and Resilient Bituminous Types)
ASTM D 1752	(1984; R 1992) Preformed Sponge Rubber and Cork Expansion Joint Fillers for Concrete Paving and Structural Construction
ASTM D 1784	(1992) Rigid Poly(Vinyl Chloride) (PVC) Compounds and Chlorinated Poly(Vinyl Chloride) (CPVC) Compounds
ASTM D 2167	(1994) Density and Unit Weight of Soil in Place by the Rubber Balloon Method
ASTM D 2321	(1989; R 1995) Underground Installation of Thermoplastic Pipe for Sewers and Other Gravity-Flow Applications
ASTM D 2922	(1991) Density of Soil and Soil-Aggregate in Place by Nuclear Methods (Shallow Depth)
ASTM D 3017	(1988; R 1993) Water Content of Soil and Rock in Place by Nuclear Methods (Shallow Depth)
ASTM D 3212	(1996a) Joints for Drain and Sewer Plastic Pipes Using Flexible Elastomeric Seal

1.2 MEASUREMENT AND PAYMENT

1.2.1 Rock Excavation

Rock Excavation shall be measured as specified in Section 02222 Rock Excavation, and paid for in accordance with Section 01025, MEASUREMENT AND PAYMENT.

1.3 SUBMITTALS

Government approval is required for submittals with a "GA" designation; submittals having an "FIO" designation are for information only. Unless otherwise indicated, primary reviewer for these submittals will be the Contracting Officer. The following shall be submitted in accordance with Section 01330 SUBMITTAL PROCEDURES:

SD-06 Instructions

Placing Pipe; FIO.

Printed copies of the manufacturer's recommendations for installation procedures of the material being placed, prior to installation.

SD-13 Certificates

Resin Certification; FIO. Determination of Density; FIO. Frame and Cover for Gratings; GA. This submittal shall be reviewed by the Civil Engineering Consultant.

Certified copies of test reports demonstrating conformance to applicable pipe specifications, before pipe is installed. Certification on the ability of frame and cover or gratings to carry the imposed live load.

1.4 DELIVERY, STORAGE, AND HANDLING

1.4.1 Delivery and Storage

Materials delivered to site shall be inspected for damage, unloaded, and stored with a minimum of handling. Materials shall not be stored directly on the ground. The inside of pipes and fittings shall be kept free of dirt and debris. Gasket materials and plastic materials shall be protected from exposure to the direct sunlight over extended periods.

1.4.2 Handling

Materials shall be handled in such a manner as to ensure delivery to the trench in sound, undamaged condition. Pipe shall be carried to the trench, not dragged.

PART 2 PRODUCTS

2.1 PIPE FOR STORM DRAINS

Pipe for culverts and storm drains shall be of the sizes indicated and shall conform to the requirements specified.

2.1.1 PVC Pipe

The PVC pipe shall have cell classification of PVC used to manufacture the pipe in accordance with AASHTO M 304

2.1.1.1 Non-Pressure PVC Pipe

ASTM F 679, minimum wall thickness SDR 35, produced from PVC certified by the compounder as meeting the requirements of ASTM D 1784, minimum cell class 12454-B. Pipe shall be bell and spigot type. Bell end shall be an integral wall section with solid cross section rubber ring, factory assembled. Spigot end shall be beveled to ensure proper insertion. Rubber rings shall conform to ASTM D 3212. PVC fittings shell be bell and spigot type, compatible with pipe.

2.2 MISCELLANEOUS MATERIALS

2.2.1 Concrete

Unless otherwise specified, concrete and reinforced concrete shall conform

to the requirements for 3000 psi concrete under Section 03300 CAST-IN-PLACE STRUCTURAL CONCRETE. The concrete mixture shall have air content by volume of concrete, based on measurements made immediately after discharge from the mixer, of 5 to 7 percent when maximum size of coarse aggregate exceeds 1-1/2 inches. Air content shall be determined in accordance with ASTM C 231. The concrete covering over steel reinforcing shall not be less than 1-1/2 inch thick for covers and not less than 1-1/2 inchesthick for walls and flooring. Concrete covering deposited directly against the ground shall have a thickness of at least 3 inchesbetween steel and ground. Expansion-joint filler material shall conform to ASTM D 1751, or ASTM D 1752, or shall be resin-impregnated fiberboard conforming to the physical requirements of ASTM D 1752.

2.2.2 Mortar

Mortar for pipe joints, connections to other drainage structures, and brick or block construction shall conform to ASTM C 270, Type M, except the maximum placement time shall be 1 hour. The quantity of water in the mixture shall be sufficient to produce a stiff workable mortar. Water shall be clean and free of harmful acids, alkalies, and organic impurities. The mortar shall be used within 30 minutes after the ingredients are mixed with water. The inside of the joint shall be wiped clean and finished smooth. The mortar head on the outside shall be protected from air and sun with a proper covering until satisfactorily cured.

2.2.3 Precast Concrete Segmental Blocks

Precast concrete segmental block shall conform to ASTM C 139, not more than 8 inches thick, not less than 8 inches long, and of such shape that joints can be sealed effectively and bonded with cement mortar.

2.2.4 Brick

Brick shall conform to ASTM C 62, Grade SW; ASTM C 55, Grade S-I or S-II; or ASTM C 32, Grade MS. Mortar for jointing and plastering shall consist of one part portland cement and two parts fine sand. Lime may be added to the mortar in a quantity not more than 25 percent of the volume of cement. The joints shall be filled completely and shall be smooth and free from surplus mortar on the inside of the structure. Brick structures shall be plastered with 1/2 inch of mortar over the entire outside surface of the walls. For square or rectangular structures, brick shall be laid in stretcher courses with a header course every sixth course. For round structures, brick shall be laid radially with every sixth course a stretcher course.

2.2.5 Precast Reinforced Concrete Manholes

Precast reinforced concrete manholes shall conform to ASTM C 478. Joints between precast concrete risers and tops shall be tongue and groove joints. Joints between sections shall be made with preformed butyl rubber joint sealant conforming to ASTM C 443.

2.2.6 Frame and Cover for Gratings

Frame and cover for gratings shall be cast gray iron, ASTM A 48, Class 35B. Weight, shape, size, and waterway openings for grates and curb inlets shall be as indicated on the plans. The words "STORM SEWER" shall be cast into covers so to be plainly visible

2.2.7 Joints

2.2.7.1 PVC Plastic Pipes

Joints shall be elastomeric gasket type in accordance with the specification for the pipe and as recommended by the pipe manufacturer.

2.3 STEEL LADDER

Steel ladder shall be provided where the depth of the manhole exceeds 4 feet. These ladders will be not less than 16 inches in width, with 3/4 inch diameter rungs spaced 12 inchesapart. The two stringers shall be a minimum 3/8 inch thick and 2-1/2 inches wide. Ladders, appurtenances and inserts shall be galvanized after fabrication in conformance with ASTM A 123.

PART 3 EXECUTION

3.1 EXCAVATION FOR PIPE CULVERTS, STORM DRAINS, AND DRAINAGE STRUCTURES

Excavation of trenches and for appurtenances and backfilling for culverts and storm drains shall be in accordance with the applicable portions of Section 02316 EXCAVATION, TRENCHING, AND BACKFILLING FOR UTILITIES SYSTEMS.

3.1.1 Trenching

The width of trenches at any point below the top of the pipe shall be not greater than the outside diameter of the pipe plus 12 inches on each side of pipe to permit satisfactory jointing and thorough tamping of the bedding material under and around the pipe. Sheeting and bracing where required shall be placed within the trench width as specified. Care shall be taken not to overexcavate.

3.1.2 Removal of Rock

Rock in either ledge or boulder formation shall be replaced with suitable materials to provide a compacted earth cushion having a thickness between unremoved rock and the pipe of at least 8 inches or 1/2 inch for each foot of fill over the top of the pipe, whichever is greater, but not more than three-fourths the nominal diameter of the pipe. Where bell-and-spigot pipe is used, the cushion shall be maintained under the bell as well as under the straight portion of the pipe. Rock excavation shall be as specified and defined in Section 02222 ROCK EXCAVATION.

3.1.3 Removal of Unsuitable Material

Where wet or otherwise unsuitable soil incapable of properly supporting the pipe, as determined by the Contracting Officer, is unexpectedly encountered in the bottom of a trench, such material shall be removed to the depth required and replaced to the proper grade with bedding material, compacted

as provided in paragraph BACKFILLING. When removal of unsuitable material is due to the fault or neglect of the Contractor in his performance of shoring and sheeting, water removal, or other specified requirements, such removal and replacement shall be performed at no additional cost to the government.

3.2 BEDDING

The bedding surface for the pipe shall provide a firm foundation of uniform density throughout the entire length of the pipe, including ball portions.

3.2.1 Plastic Pipe

Bedding for PVC pipe shall meet the requirements of ASTM D 2321. Bedding, haunching, and initial backfill shall conform to Section 620 Item 620.08 of the NYSDOT standard specifications.

3.3 PLACING PIPE

Each pipe shall be carefully examined before being laid, and defective or damaged pipe shall not be used. Plastic pipe shall be protected from exposure to the direct sunlight prior to laying as needed to maintain adequate pipe stiffness and meet installation deflection requirements. Pipelines shall be laid to the grades and alignment indicated. Proper facilities shall be provided for lowering sections of pipe into trenches. Under no circumstances shall pipe be laid in water, and no pipe shall be laid when trench conditions or weather are unsuitable for such work. Diversion of drainage or dewatering of trenches during construction shall be provided as necessary. All pipe in place shall be inspected before backfilling, and those pipes damaged during placement shall be removed and replaced.

3.3.1 PVC Pipe

Laying shall proceed upgrade with spigot ends of bell-and-spigot pipe pointing in the direction of the flow.

3.4 JOINTS

3.4.1 Flexible Watertight Joints

Gaskets and jointing materials shall be as recommended by the particular manufacturer in regard to use of lubricants, cements, adhesives, and other special installation requirements. Surfaces to receive lubricants, cements, or adhesives shall be clean and dry. Gaskets and jointing materials shall be affixed to the pipe prior to the installation of the pipe, and shall be protected from the sun, blowing dust, and other deleterious agents at all times. Gaskets and jointing materials shall be inspected before installing the pipe; any loose or improperly affixed gaskets and jointing materials shall be removed and replaced. The pipe shall be aligned with the previously installed pipe, and the joint pushed home. If, while the joint is being made the gasket becomes visibly dislocated the pipe shall be removed and the joint remade at no additional cost to the Government.

3.5 DRAINAGE STRUCTURES

3.5.1 Manholes and Inlets

Construction shall be of reinforced concrete, precast reinforced concrete, complete with frames and covers or gratings and with fixed galvanized steel ladders.

3.6 STEEL LADDER INSTALLATION

Ladder shall be adequately anchored to the wall by means of galvanized steel inserts spaced not more than 6 feet vertically, and shall be so installed as to provide at least 6 inches of space between the wall and the rungs. The wall along the line of the ladder shall be vertical for its entire length.

3.7 BACKFILLING

3.7.1 Backfilling Pipe in Trenches

After the pipe has been properly bedded, select granular fill material as indicated, at a moisture content that will facilitate compaction, shall be placed along both sides of pipe in layers not exceeding 6 inches in compacted depth. The backfill shall be brought up evenly on both sides of pipe for the full length of pipe. Care shall be taken to ensure thorough compaction of the fill under the haunches of the pipe. Each layer shall be thoroughly compacted with mechanical tampers or rammers. This method of filling and compacting shall continue until the fill has reached an elevation of at least 12 inches above the top of the pipe. The remainder of the trench shall be backfilled and compacted by mechanical rammers or tampers in layers not exceeding 12 inches. Tests for density will be made as necessary to ensure conformance to the compaction requirements specified elsewhere in this paragraph. Where it is necessary in the opinion of the Contracting Officer, any sheeting or portions of bracing used shall be left in place and the contract will be adjusted accordingly. Untreated sheeting shall not be left in place beneath structures or pavements.

3.7.2 Movement of Construction Machinery

Contractor shall avoid crossing pipe until backfill is 5 ft. above pipe before allowing heavy equipment parallel with the pipe, displacement of or injury to the pipe shall be avoided. Movement of construction machinery over a culvert or storm drain at any stage of construction shall be at the Contractor's risk. Any damaged pipe shall be repaired or replaced.

3.7.3 Compaction

3.7.3.1 General

Cohesionless materials include gravels, gravel-sand mixtures, sands, and gravelly sands. Cohesive materials include clayey and silty gravels, gravel-silt mixtures, clayey and silty sands, sand-clay mixtures, clays, silts, and very fine sands. When results of compaction tests for

moisture-density relations are recorded on graphs, cohesionless soils will show straight lines or reverse-shaped moisture-density curves, and cohesive soils will show normal moisture-density curves.

3.7.3.2 Minimum Density

Backfill over and around the pipe and backfill around and adjacent to drainage structures shall be compacted at the approved moisture content to the following applicable minimum density (densities) which will be determined as specified in this paragraph. Refer to Section 02316, EXCAVATION, TRENCHING AND BACKFILLING FOR UTILITIES SYSTEMS for further requirements

a. Under paved roads, streets, parking areas, and landscaped areas the density shall be 95 percent of maximum density for cohesionless material, up to the elevation where requirements for pavement subgrade materials and compaction shall control.

3.7.4 Determination of Density

Testing shall be the responsibility of the Contractor and performed at no additional cost to the Government. Testing shall be performed by an approved commercial testing laboratory or by the Contractor subject to approval. Tests shall be performed in sufficient number to ensure that specified density is being obtained. Laboratory tests for moisture-density relations shall be made in accordance with ASTM D 1557 except that mechanical tampers may be used provided the results are correlated with those obtained with the specified hand tamper. Field density tests shall be determined in accordance with ASTM D 2167 or ASTM D 2922. When ASTM D 2922 is used, the calibration curves shall be checked and adjusted, if necessary, using the sand cone method as described in paragraph Calibration of the referenced publications. ASTM D 2922results in a wet unit weight of soil and when using this method ASTM D 3017 shall be used to determine the moisture content of the soil. The calibration curves furnished with the moisture gauges shall be checked along with density calibration checks as described in ASTM D 3017 or ASTM D 2922. Test results shall be furnished the Contracting Officer. The calibration checks of both the density and moisture gauges shall be made at the beginning of a job on each different type of material encountered and at intervals as directed.

-- End of Section --

SECTION 02821

FENCING

PART 1 GENERAL

1.1 REFERENCES

The publications listed below form a part of this specification to the extent referenced. The publications are referred to in the text by basic designation only.

AMERICAN SOCIETY FOR TESTING AND MATERIALS (ASTM)

ASTM A 153/A 153M	(1995) Zinc-Coated (Hot Dip) on Iron and Steel Hardware
ASTM A 392	(1996) Zinc-Coated Steel Chain-Link Fence Fabric
ASTM A 780	(1993a) Repair of Damaged and Uncoated Areas of Hot-Dipped Galvanized Coatings
ASTM A 824	(1995) Metallic-Coated Steel Marcelled Tension Wire for Use With Chain Link Fence
ASTM C 94	(1997) Ready-Mixed Concrete
ASTM F 626	(1996) Fence Fittings
ASTM F 668	(1996) Poly(Vinyl Chloride) (PVC)-Coated Steel Chain-Link Fence Fabric
ASTM F 1083	(1997) Specification for Pipe, Steel, Hot-Dipped Zinc-Coated (Galvanized) Welded, for Fence Structure

1.2 SUBMITTALS

Government approval is required for submittals with a "GA" designation; submittals having an "FIO" designation are for information only. The following shall be submitted in accordance with Section 01330 SUBMITTAL PROCEDURES:

SD-13 Certificates

Chain Link Fence; GA.

Statement, signed by an official authorized to certify on behalf of the manufacturer, attesting that the chain link fence and component materials

meet the specified requirements.

PART 2 PRODUCTS

2.1 FENCE FABRIC

Fence fabric shall conform to the following:

2.1.1 Chain Link Fence Fabric

ASTM A 392, Class 2b polyvinyl chloride-coated steel fabric with 0.3 ounces of zinc coating per square foot in accordance with ASTM F 668. Fabric shall be fabricated of 9 gauge wire woven in 2 inch mesh. Fabric height shall be 4 feet. Fabric shall be knuckled on the top selvage and knuckled on the bottom selvage.

1. Fabric shall be PVC coated thermally fused and bonded to a primer which is thermally cured onto galvanized steel core wire conforming to ASTM F 668, Class 2b. Color of vinyl coating shall be black. Minimum coating thickness shall be 0.006 in. Color sample shall be submitted to the Architect for approval.

2. Fabric shall be woven into a 2 in. mesh of 9 finished gauge (0.148 in.) galvanized wire with a minimum breaking strength of 1290 lb. in accordance with ASTM F 668, Class 2b.

3. Zinc for galvanized coating shall conform to ASTM B 6, galvanized by hot dipped method AISI Type I, before vinyl coating; coating shall be smooth. Minimum weight of zinc coating shall be 1.2 oz. per sq. ft. for 6, 9 and 11 gage.

4. Polyvinyl chloride coating shall meet the following requirements.

   a. Specific gravity shall be 1.30 maximum, tested in accordance with ASTM D 792.

   b. Hardness shall have a minimum Durometer reading of A 95 in accordance with ASTM D 2240. Ultimate elongation shall be 275% in accordance with ASTM D 412.

   c. Tensile strength shall have a test minimum of 3,300 psi in accordance with ASTM D 412.

   d. Vinyl shall be a dense and impervious covering free of voids, having a smooth, lustrous surface without pinholes, bubbles, voids, or rough or blistered surface.

2.2 POSTS

2.2.1 Metal Posts for Chain Link Fence

ASTM F 1083, zinc-coated. Group IA, with external coating Type A steel pipe. Sizes shall be NPS 2 inch diameter. Line posts and terminal (corner, gate, and pull) posts selected shall be of the same designation

throughout the fence.

2.3 BRACES AND RAILS

ASTM F 1083, zinc-coated, Group IA, steel pipe, size NPS 1-1/4 may be used as braces and rails.

2.4 WIRE

2.4.1 Tension Wire

Tension wire shall be Type I or Type II, Class 2 coating, in accordance with ASTM A 824.

2.5 ACCESSORIES

ASTM F 626. Ferrous accessories shall be zinc or aluminum coated. Truss rods shall be furnished for each terminal post. Truss rods shall be provided with turnbuckles or other equivalent provisions for adjustment. Tie wire for attaching fabric to rails, braces, and posts shall be 9 gauge steel wire and match the coating of the fence fabric. Miscellaneous hardware coatings shall conform to ASTM A 153/A 153M unless modified.

2.6 CONCRETE

ASTM C 94, using 3/4 inch maximum size aggregate, and having minimum compressive strength of 3000 psi at 28 days. Grout shall consist of one part portland cement to three parts clean, well-graded sand and the minimum amount of water to produce a workable mix.

PART 3 EXECUTION

3.1 INSTALLATION

Fence shall be installed to the lines and grades indicated. The area on either side of the fence line shall be cleared to the extent indicated. Line posts shall be spaced equidistant at intervals not exceeding 10 feet. Terminal (corner, gate, and pull) posts shall be set at abrupt changes in vertical and horizontal alignment. Fabric shall be continuous between terminal posts; however, runs between terminal posts shall not exceed 500 feet. Any damage to galvanized surfaces, including welding, shall be repaired with paint containing zinc dust in accordance with ASTM A 780.

3.2 EXCAVATION

Post holes shall be cleared of loose material. Waste material shall be spread where directed. The ground surface irregularities along the fence line shall be eliminated to the extent necessary to maintain a 1 inch clearance between the bottom of the fabric and finish grade.

3.3 POST INSTALLATION

3.3.1 Posts for Chain Link Fence

Posts shall be set plumb and in alignment. Except where solid rock is encountered, posts shall be set in concrete to the depth indicated on the drawings. Where solid rock is encountered with no overburden, posts shall be set to a minimum depth of 18 inches in rock. Where solid rock is covered with an overburden of soil or loose rock, posts shall be set to the minimum depth indicated on the drawing unless a penetration of 18 inches in solid rock is achieved before reaching the indicated depth, in which case depth of penetration shall terminate. All portions of posts set in rock shall be grouted. Portions of posts not set in rock shall be set in concrete from the rock to ground level. Posts set in concrete shall be set in holes not less than the diameter shown on the drawings. Diameters of holes in solid rock shall be at least 1 inch greater than the largest cross section of the post. Concrete and grout shall be thoroughly consolidated around each post, shall be free of voids and finished to form a dome. Concrete and grout shall be allowed to cure for 72 hours prior to attachment of any item to the posts.

3.4 RAILS

3.4.1 Top Rail

Top rail shall be supported at each post to form a continuous brace between terminal posts. Where required, sections of top rail shall be joined using sleeves or couplings that will allow expansion or contraction of the rail. Top rail, if required for high security fence, shall be installed as indicated on the drawings.

3.4.2 Bottom Rail

The bottom rail shall be bolted to double rail ends and double rail ends shall be securely fastened to the posts. Bolts shall be peened to prevent easy removal. Bottom rail shall be installed before chain link fabric.

3.5 BRACES AND TRUSS RODS

Braces and truss rods shall be installed in conformance with the standard practice for the fence furnished. Horizontal (compression) braces and diagonal truss (tension) rods shall be installed on fences over 6 feet in height. A center brace or 2 diagonal truss rods shall be installed on 12 foot fences. Braces and truss rods shall extend from terminal posts to line posts. Diagonal braces shall form an angle of approximately 40 to 50 degrees with the horizontal. No bracing is required on fences 6 feet high or less if a top rail is installed.

3.6 TENSION WIRES

Tension wires shall be installed along the top and bottom of the fence line and attached to the terminal posts of each stretch of the fence. Top tension wires shall be installed within the top 4 inches of the installed fabric. Bottom tension wire shall be installed within the bottom 6 inches of the installed fabric. Tension wire shall be pulled taut and shall be free of sag.

3.7 CHAIN LINK FABRIC

Chain link fabric shall be installed between the post and retaining wall. Fabric shall be attached to terminal posts with stretcher bars and tension bands. Bands shall be spaced at approximately 15 inch intervals. The fabric shall be installed and pulled taut to provide a smooth and uniform appearance free from sag, without permanently distorting the fabric diamond or reducing the fabric height. Fabric shall be fastened to line posts at approximately 15 inch intervals and fastened to all rails and tension wires at approximately 12 inch intervals. Fabric shall be cut by untwisting and removing pickets. Splicing shall be accomplished by weaving a single picket into the ends of the rolls to be joined. The bottom of the installed fabric shall be 1 plus or minus 1/2 inch above the ground. For high security fence, after the fabric installation is complete, the fabric shall be exercised by applying a 50 pound push-pull force at the center of the fabric between posts; the use of a 30 pound pull at the center of the panel shall cause fabric deflection of not more than 2-1/2 inches when pulling fabric from the post side of the fence; every second fence panel shall meet this requirement; all failed panels shall be resecured and retested at the Contractor's expense.

-- End of Section --

SECTION 02950

PLANTING

PART 1 GENERAL

1.1 SUBMITTALS

Government approval is required for submittals with a "GA" designation; submittals having an "FIO" designation are for information only. The following shall be submitted in accordance with Section 01330 SUBMITTAL PROCEDURES:

SD-01 Data

Manufacturer's Product Data; GA.

Manufacturer's product data shall be submitted for the following materials: Aluminum sulfate; Antidessicant; Fertilizer; Fungicide; Herbicide; Insecticide; Peat moss; Soil separator; Tree wrap.

SD-09 Reports

Test Reports; GA.

Test reports from an approved testing agency indicating compliance with the specifications shall be submitted for topsoil, peat moss, planting soil mixture.

SD-13 Certificates

Certificates; GA.

Labels from the manufacturer's container certifying that the product meets the specified requirements shall be submitted for the following materials: Bone meal; Commercial fertilizer; Limestone.

1.2 SCOPE OF WORK

The work consists of furnishing all labor, equipment and materials to perform installation of groundcover, tree and shrub plantings and landscape renovations

1.3 PREPARATION OF PLANTING AREAS

Under this contract planting locations will fall into five distinct categories.

1. Type 1 plantings are in existing open areas free of any shrub or tree growth. Massed shrub plantings will occur under

this category.

2. Type 2 plantings are in woodland areas where numerous roots and rocks will prevent assigning a specific location.

3. Type 3 plantings are shrub replacements. The contractor shall selectively remove existing shrubbery and other herbaceous vegetation (to include roots), to provide an open space for each new plant.

4. Type 4 plantings are replacement hedges. The contractor shall selectively remove existing shrubbery (to include roots) and other herbaceous vegetation to provide an open space for the planting trench. Contractor shall place mulch over top the bare soil between plants as described herein.

5. Type 5 plantings involve the planting of large trees (see items 0033,0043,0059,0065. The contractor shall prepare planting pits for either a deciduous tree of 5-6" caliper or an evergreen tree of 12-15 feet.

1.4 ARCHEOLOGICAL SENSITIVITY

The project site is the location of an eighteenth century occupation and as such the contractor will be required to conduct his operations in a manner that will result in minimum disturbance to the site. All artifacts exposed during excavation are and shall remain the property of the Federal Government.

PART 2 PRODUCTS

2.1 GOVERNMENT FURNISHED ITEMS

2.1.1 Compost and Burn Site:

The contractor may use the Range 4, located off Route 293 (approximately 2 miles from Washington Gate) for disposal of wood chips, brush and other woody plant debris.

Compost and Burn Site hours of operation, weekdays, are 7:00 A.M. to 2:30 P.M. Last-load in will be accepted one half hour before closing.

Contractor shall obtain a tare weight (empty vehicle weight) at transfer station (adjacent to Range 4) prior to entering Range 4. Once a tare weight is obtained, that vehicle must be weighed prior to unloading burnable items. Contractors are not subject to dumping fees for burnable or compostable materials delivered to Range 4.

2.2 CONTRACTOR FURNISHED ITEMS

The contractor shall furnish and use traffic safety devices (cones, flags and signs) whenever contract equipment is parked on roadways.

The contractor shall be required to provide one (1) plant location marker

for each new plant, with the exception of hedge plantings. Plant location markers shall be 4 inch x 5 inch, white vinyl flags mounted on 30 inch long wire or plastic stakes.

The contractor shall furnish a combination endo and ectomycorrhizal fungi. An acceptable product is MycorTree Tree Saver + Healthy Startä or MycorTree Root Dipäas manufactured by Plant Health Care, Inc. (800)-421-9051 or equal. Manufacturers rates shall be followed and applied during planting to all trees and shrubs in this contract.

2.2.1 PLANT GUARANTEE PERIOD

Plants shall be guaranteed for a period of one year after Inspection Report is completed. Beginning of the plant guarantee period shall start on the date that an inspection report was completed by the COR and demonstrates that all plants listed on the open delivery order are in place and have been installed in accordance with specifications and plans. COR will complete the inspection report within (5) working days following submission of the contractor's completed planting journal.

2.2.2 CARE OF PLANTING

Care of planting shall begin immediately after each plant is planted and shall continue until the end of the Period of Guarantee.

All dead, unhealthy or badly impaired plants, as determined by the Contracting Officer, shall be immediately removed from the project. All replacement plantings shall be planted no later than the next succeeding planting season as specified herein.

During the guarantee period, the contractor shall water all plants as necessary to maintain an adequate supply of moisture within the root zone. An adequate supply of moisture is recognized to be the equivalent of one inch of absorbed water per week that is delivered at weekly intervals in the form of natural rain or is augmented as required by periodic waterings. Water shall not be applied with excessive pressure which might displace mulch and shall not be applied so quickly that it cannot be absorbed into the root zone.

2.2.3 REPLACEMENT PLANTING

The contractor shall be required to furnish the Government with a replacement of the same size quality and species without charge to the Government if the original plant dies or shows evidence of not surviving, i.e., excessive dieback of branches, undersized leaves, or insect infestation associated with a dying plant within one (1) year from the date of inspection report.

2.3 INSPECTION

Contractor shall make available for inspection by the desginated Government representative, all material delivered to the planting site. All plant material designated as specimen in TE5 under remarks will be subject to government inspection and selection prior to delivery to the planting site.

The contractor shall make arrangements with the source of supply for such inspection and provide to the Contracting Officer (CO), complete and detailed information regarding such arrangements. This information shall be provided not less than 15 days in advance of harvesting operations so as to allow Government representative access to source of supply for inspection and to place identification seals on selected specimen plants.

2.3.1 QUALITY AND INSPECTION

All plants and corresponding root balls shall be sized in accordance with current American Standard for Nursery Stock (ANSI Z60.1-1996).

2.4 PLANTING MATERIALS

All plants shall be nursery grown, they shall have been growing within Plant Hardiness Zones (PHZ), as per Jan. 1990 USDA PHZ map, 4B to 7B for a minimum of two (2) years prior to the date of harvesting. Contractor shall provide to the Contracting Officer, prior to planting, clear copies of the bill of lading obtained from grower or broker. Bill of Lading shall indicate the plant material name to include genus, species and variety for all plant material as described in TE5.

Plants shall be free of all plant pests and diseases. Bark shall be firm on trunk and branches with no indication that the trees have suffered from frost cracks, sun scald, lightening, wildlife or mechanical injury.

Plants shall have well developed fibrous root systems. Container grown plants shall retain shape and hold together when removed from the container. Plants exhibiting prolific encircling roots or appear root bound upon removal of the container will be rejected.

Burlap or similar material shall tightly wrap and completely cover the root ball. Earth balls shall be sized in accordance with ANSI Z60.1-1996, unless otherwise indicated in TE5 under remarks. Balled and burlapped (B&B) plants arriving with broken, loose or manufactured balls will be rejected. Contractor shall use delivery method which prevents cracked or "mushroomed" balls at point of delivery. B&B or container plants dropped from delivery vehicles to the ground will be rejected.

Contractor shall cover all plant material transported in open trucks. The heads of trees shall be tied in to prevent fracturing or breaking of branches. Plants shall have top-growth that has been adequately hardened off prior to shipment. Evergreens exhibiting foliage damage from sweating will be rejected.

Specimen evergreens shall have exceptionally heavy dense foliage, exhibiting the natural form of the species. The body of such plants shall be dense throughout, uniform and without holes. Foliage shall begin not more than 1 inch per foot of the specified size (spread or height) above the ground at the outer circumference from nursery planting mark or collar.

2.5.1 NOTIFICATION AND DELIVERY

The contractor shall submit a work schedule to the Contracting Officer a minimum of seven (7) days prior to start of work

Contractor shall coordinate with Contracting Officer for placement of planting location markers. Contractor shall deliver to job site only those plants which can be planted during the same working day.

2.6 PLANTING SOILS FOR BACKFILLING

Excavation for planting shall include the removal and replacement of existing topsoil, and subsoil. The contractor shall mix and prepare one (1) part well rotted manure or compost to four (4) parts original soil. This amended soil shall become the planting soil (backfill). Stones and other debris found in the process of preparing the planting pit, and larger than 2 inches in size shall be removed by the contractor. Such material shall be disposed of off-site or as directed by the Contracting Officer.

Planting soil shall have pH value range of 5.5 to 7.0.

If planting soil mixture does not fall within the required pH range, limestone or aluminum sulfate shall be added to bring the pH within the specified limit.

2.6.1 Limesto:ne

Lime shall be an approved agricultural limestone containing no less than 50% of total carbonates, and 25% total magnesium with a neutralizing value of at least 100%. The material shall be ground to such a fineness that 40% will pass through a No. 100 U.S. Standard Sieve, and 98% will pass through a No. 20 U.S. Standard Sieve. The lime shall be uniform in composition, dry and free flowing, and shall be delivered to the site in the original unopened containers, each bearing the manufacturer's guaranteed analysis. Any lime which becomes caked or otherwise damaged making it unsuitable for use, will be rejected.

2.6.2 Aluminum Sulfate:

Aluminum sulfate shall be unadulterated and shall be delivered in containers with the name of the material and manufacturer and net weight of contents.

2.6.3 Other Ingredients:

Contractor shall apply MycorTree Tree Saver + Healthy Startä or MycorTree Root Dipä to all trees and shrubs.

2.7 PLANTING SEASON

Unless otherwise directed by the Contracting Officer, planting dates are as follows:

Deciduous plants:	March 1 to May 15
	October 15 to December 1.

Evergreen plants: April 1 to May 15
August 15 to November 15.

No planting shall be performed when soil conditions would prove detrimental to the establishment of the plant.

2.8 PLANTING PIT CONFIGURATION: TREES

Plant pits shall be circular in outline, and shall be concave in section. Tree pit diameter shall be 3 times the diameter of the root ball. Tree pit depth shall be 2/3 the depth of the root ball at the pit center. In the pit center dig a hole the same diameter as the bottom of the root ball and 1/3 the depth of the root ball. This will allow the bottom 1/3 of the root ball to fit snugly into the hole, helping reduce the need to stake.

2.9 PLANTING PIT CONFIGURATION: SHRUBS

Plant pits shall be circular in outline, and shall be concave in section. Shrub pit diameter shall be 3 times the diameter of the root ball. Shrub pit depth shall be 2/3 the depth of the root ball at the pit center. In the pit center dig a hole the same diameter as the bottom of the root ball and 1/3 the depth of the root ball. This will allow the bottom 1/3 of the root ball to fit snugly into the hole, helping reduce the need to stake.

2.10 PLANTING PIT CONFIGURATION: HEDGES

Plant pits shall be dug as shallow trenches. Plant pit width shall be 3 times the diameter of the plant root ball or the maximum root spread. Hedge pit depth shall be 2/3 the depth of the root ball at the pit center. In the pit center dig a trench the same diameter as the bottom of the root ball and 1/3 the depth of the root ball. This will allow the bottom 1/3 of the root ball to fit snugly into the hole, helping reduce the need to stake.

PART 3 EXECUTION

3.1 PLANTING BARE ROOT PLANTS

The depth and width of all pits shall be determined by the root outline of each plant. Broken and desiccated root tips shall be pruned by the contractor. The contractor shall mix a hydrophilic acrylic copolymer like MycorTree Root Dipä with water at the manufacturers recommended rate and dip all bare root plants immediately before planting.

3.2 DRAINAGE OF SOILS

Test drainage of five plant beds and pits chosen by the Contracting Officer shall be done by filling with water twice in succession. The time at which water is put into the pit or bed for a second filling shall be noted. Contracting Officer shall then be notified of the time it takes for pit or bed to drain completely. Planting operations shall not proceed until Contracting Officer has reviewed test drainage results.

Notify the Contracting Officer in writing of all soil or drainage conditions that he considers detrimental to growth of plant material.

Submit proposal and cost estimate for correction of the conditions for Contracting Officer's approval before starting work.

3.3 OBSTRUCTIONS BELOW GROUND

Any rock or other underground obstruction less than one-quarter cubic yard in volume shall be removed to the depth necessary to permit proper planting according to plans and specifications. If underground obstructions larger than one-quarter cubic yard are encountered, other locations for planting will be selected by the Contracting Officer (CO). Such pits when abandoned, shall be backfilled and restored to original condition by the contractor.

3.4 BACKFILLING PLANTS

All plants shall be set plumb at such a level that after settling, they will maintain their original relationship to ground surface, as they bore to the ground from which they were harvested unless otherwise directed by the Contracting Officer. While held in a vertical position, plant shall be turned to take advantage of its natural features for best appearance in a given location. After setting the plant and before backfilling, all twine and/or binding rope must be cut. Planting soil shall be tamped thoroughly yet gently by hand.

3.4.1 Ball and Burlap (B&B):

After the plant is set into the planting pit the burlap on the upper 1/2 shall be removed or pulled down to the bottom of the ball. Any non-degradable material, i.e., nylon, poly, treated burlap must be removed.

3.4.2 Wire basket (WB):

After the plant is set into the planting pit remove the wire basket and any non-degradable material from the planting pit.

3.5 FINISHED SURFACE

The contractor shall cultivate and rake over finished planting areas and shall leave them in an orderly condition. Contractor shall form a shallow basin around individual plants or the planting bed, to facilitate future watering. A 3 inch saucer shall encircle and be positioned directly over the root ball edge.

3.6 WATERING

Thorough soaking of the ball and pit shall take place at the time of planting. Contractor shall provide water, as many times later as seasonable conditions require, for the entire PLANT GUARANTEE PERIOD (see section C.4.6)

3.7 STAKING

All trees over 2-1/2 inches caliper, shall be staked with two (2) rough sawn hardwood tree stakes, free of knots, rot, cross grain, or other

defects that would impair strength. Standard stake size shall be 2 X 2 inches, and 6 feet long. Stakes shall not injure root balls and shall be driven into ground outside of saucer edge, deep enough to provide adequate support. Trees shall be secured to stakes at approximately 36 inches above soil line with no. AG1250 O.D. Arbortape as manufactured by Neptco Inc.of Pawtucket RI or equal. Ties shall be fastened to allow some trunk movement, max. 1 inch in either direction.

3.7.1 GUYING LARGE TREES:

Contractor shall stake large trees using Duckbillä model 68-DB1 tree anchors attached to 7 strand galvinized steel cable and routed thru 5/8 inch od rubber hose at the tree trunk.

3.7.2 LAWN MOWER GUARD:

The contractor shall place one (1) lawn mower guard at the base of each new deciduous tree to protect against potential lawn mower injury. Lawn mower guards shall be as manufactured by either Deep Root Corporation's Arbor Gard or Shawtown's Trunk Cover or approved equal.

Stakes, guys and mower guards shall be repaired, replaced as required throughout the PLANT GUARANTEE PERIOD.

3.8 WRAPPING

The trunks of all deciduous trees over 2-1/2 inches caliper, shall be wrapped immediately after planting. Wrapping shall be a single layer of burlap tree wrap or equal wound spirally downward around the trunk from the 2nd major branch.

3.9 MULCHING

Following watering the contractor shall cover entire planting pit or bed surface to a depth of 3 inches, with a taper to 1 inch as the shrub/tree base is approached, with shredded cedar or cypress bark mulch. Massed planting sites shall be mulched with clean hardwood chip mulch.

3.10 PRUNING

Contractor shall prune only as directed by Contracting Officer. Pruning shall be accomplished in accordance with current NAA standards. Plants having evidence of recent pruning, i.e.,just before their arrival to job site will be rejected.

3.11 DEBRIS REMOVAL

Contractor shall remove debris i.e., soil, sod, stone, roots, brush, trees and other vegetation accumulated while preparing planting sites, off of the USMA reservation.

3.12 SPECIAL REQUIREMENTS

Contractor shall provide from the Plant List a selected tree for the annual

Arbor Day planting ceremony usually held at the West Point Elementary School or similar location. Requirements for this ceremony are for planting as per specification and include placing approximately 1/3 one third of the backfill to the side of the planting pit. The remaining backfill will be placed by ceremony participants.

3.13 PLANTING JOURNAL

Contractor shall prepare and maintain a daily planting journal. The contractor shall submit a copy of this journal to the COR when completing all delivery orders. This journal shall contain at a minimum the following information regarding all completed plantings.

1. date of planting
2. location of planting (nearest facility or other feature)
3. plant name, including variety
4. number of plants
5. delivery order number

3.14 APPLICABLE SPECIFICATIONS AND STANDARDS

The following specifications and standards form a part of this specification :

1. Hortus Third, Cornell University (1976) Plant scientific names.

2. Manual of Woody Plants, Michael A. Dirr (current edition) Plant common names

3. Herbaceous Perennial Plants, Allan M. Armitage (1997) Plant common names

4. ANSI Z60.1-1996, American Standard for Nursery Stock

5. USMA Site Protection Specifications (12 March 1998)

6. Current edition NAA Pruning Standards for Shade Trees National Arborists Association

7. Current edition Cornell Recommendations for Pest Control and Maintenance of Trees and Shrubs

8. U.S. Army Corps of Engineer' Safety and Health Requirements Manual EM-385-1-1.

9. Historic Landscape Management Plan (1997)

The above documents are available for review at the Government Representative's office.

-- End of Section --

SECTION 03100

STRUCTURAL CONCRETE FORMWORK

PART 1 GENERAL

1.1 REFERENCES

The publications listed below form a part of this specification to the extent referenced. The publications are referred to in the text by basic designation only.

ACI INTERNATIONAL (ACI)

ACI 347R	(1994, Re-Approved 1999) Guide to Formwork for Concrete

DEPARTMENT OF COMMERCE (DOC)

DOC PS 1	(1996) Voluntary Product Standard - Construction and Industrial Plywood

1.2 SUBMITTALS

Government approval is required for submittals with a "GA" designation; submittals having an "FIO" designation are for information only. The following shall be submitted in accordance with Section 01330 SUBMITTAL PROCEDURES:

SD-01 Data

Design; FIO.

Design analysis and calculations for form design and methodology used in the design.

Form Materials; FIO.

Manufacturer's data including literature describing form materials, accessories, and form releasing agents.

SD-04 Drawings

Concrete Formwork; FIO.

Drawings showing details of formwork, including dimensions of fiber voids, joints, supports, studding and shoring, and sequence of form and shoring removal.

SD-06 Instructions

Form Releasing Agents; GA.

Manufacturer's recommendation on method and rate of application of form releasing agents.

1.3 DESIGN

Formwork shall be designed in accordance with methodology of ACI 347R for anticipated loads, lateral pressures, and stresses. Forms shall be capable of producing a surface which meets the requirements of the class of finish specified in Section 03300 CAST-IN-PLACE STRUCTURAL CONCRETE. Forms shall be capable of withstanding the pressures resulting from placement and vibration of concrete.

1.4 STORAGE AND HANDLING

Fiber voids shall be stored above ground level in a dry location. Fiber voids shall be kept dry until installed and overlaid with concrete.

PART 2 PRODUCTS

2.1 FORM MATERIALS

2.1.1 Forms For Class A Finish

Forms for Class A finished surfaces shall be plywood panels conforming to DOC PS 1, Grade B-B concrete form panels, Class I or II. Other form materials or liners may be used provided the smoothness and appearance of concrete produced will be equivalent to that produced by the plywood concrete form panels. Forms for round columns shall be the prefabricated seamless type.

2.1.2 Forms For Class D Finish

Forms for Class D finished surfaces, except where concrete is placed against earth, shall be wood or steel or other approved concrete form material.

2.1.3 Retain-In-Place Metal Forms

Retain-in-place metal forms for concrete slabs and roofs shall be as specified in Section 05300 STEEL DECKING.

2.1.4 Form Ties

Form ties shall be factory-fabricated metal ties, shall be of the removable or internal disconnecting or snap-off type, and shall be of a design that will not permit form deflection and will not spall concrete upon removal. Solid backing shall be provided for each tie. Except where removable tie rods are used, ties shall not leave holes in the concrete surface less than 1/4 inch nor more than 1 inch deep and not more than 1 inchin diameter. Removable tie rods shall be not more than 1-1/2 inches in diameter.

2.1.5 Form Releasing Agents

Form releasing agents shall be commercial formulations that will not bond with, stain or adversely affect concrete surfaces nor finish systems applied to concrete surfaces. Agents shall not impair subsequent treatment of concrete surfaces depending upon bond or adhesion nor impede the wetting of surfaces to be cured with water or curing compounds.

At Swimming Pool wall and slab surfaces to receive special plaster finish, form release agents and/or curing compounds shall no be used, unless specific approval of the Contracting Officer is obtained in writing after submission of substantive evidence that the agent(s) will have no deleterious effect on the subsequent bond of the plaster surface to the Concrete.

PART 3 EXECUTION

3.1 INSTALLATION

3.1.1 Formwork

Forms shall be mortar tight, properly aligned and adequately supported to produce concrete surfaces meeting the surface requirements specified in Section 03300 CAST-IN-PLACE STRUCTURAL CONCRETE and conforming to construction tolerance given in TABLE 1, except where more stringent tolerances are required by the Documents. Swimming Pool walls shall provide the required tolerances to conform to applicable NCAA standards in accordance with requirements specified in Section 13150, SWIMMING POOL, GENERAL REQUIREMENTS. Where concrete surfaces are to have a Class A or Class B finish, joints in form panels shall be arranged as approved. Where forms for continuous surfaces are placed in successive units, the forms shall fit over the completed surface to obtain accurate alignment of the surface and to prevent leakage of mortar. Forms shall not be reused if there is any evidence of surface wear and tear or defects which would impair the quality of the surface. Surfaces of forms to be reused shall be cleaned of mortar from previous concreting and of all other foreign material before reuse. Form ties that are to be completely withdrawn shall be coated with a nonstaining bond breaker.

3.2 CHAMFERING

Except as otherwise shown, external corners that will be exposed shall be chamfered, beveled, or rounded by moldings placed in the forms.

3.3 COATING

Forms for Class A finished surfaces shall be coated with a form releasing agent before the form or reinforcement is placed in final position. The coating shall be used as recommended in the manufacturer's printed or written instructions. Forms for Class D finished surfaces may be wet with water in lieu of coating immediately before placing concrete, except that in cold weather with probable freezing temperatures, coating shall be mandatory. Surplus coating on form surfaces and coating on reinforcing

steel and construction joints shall be removed before placing concrete.

3.4 REMOVAL OF FORMS

Forms shall be removed preventing injury to the concrete and ensuring the complete safety of the structure. Formwork for columns, walls, side of beams and other parts not supporting the weight of concrete may be removed when the concrete has attained sufficient strength to resist damage from the removal operation but not before at least 24 hours has elapsed since concrete placement. Supporting forms and shores shall not be removed from beams, floors and walls until the structural units are strong enough to carry their own weight and any other construction or natural loads. Supporting forms or shores shall not be removed before the concrete strength has reached 70 percent of design strength, as determined by field cured cylinders or other approved methods. This strength shall be demonstrated by job-cured test specimens, and by a structural analysis considering the proposed loads in relation to these test strengths and the strength of forming and shoring system. The job-cured test specimens for form removal purposes shall be provided in numbers as directed and shall be in addition to those required for concrete quality control. The specimens shall be removed from molds at the age of 24 hours and shall receive, insofar as possible, the same curing and protection as the structures they represent.

TABLE 1

TOLERANCES FOR FORMED SURFACES

(Note: Refer to Swimming Pool Drawing SP-2.2 for notes regarding special tighter tolerances required at pools)

1.	Variations from the plumb:	In any 10 feet of length ---------- 1/4 inch
	a. In the lines and surfaces of columns, piers, walls and in arises	Maximum for entire length ---------- 1 inch
	b. For exposed corner columns,control-joint grooves, and other conspicuous lines	In any 20 feet of length ---------- ---- 1/4 inch Maximum for entire length---------- 1/2 inch
2.	Variation from the level or from the grades indicated on the drawings:	In any 10 feet of length ----------1/4 inch In any bay or in any 20 feet of length---------- 3/8 inch
	a. In slab soffits, ceilings, beam soffits, and in arises, measured before removal of	Maximum for entire length ---------- 3/4 inch

TABLE 1

TOLERANCES FOR FORMED SURFACES

(Note: Refer to Swimming Pool Drawing SP-2.2 for notes regarding special tighter tolerances required at pools)

	supporting shores	
	b. In exposed lintels, sills, parapets, horizontal grooves, and other conspicuous lines	In any bay or in any 20 feet of length ----------- ----- 1/4 inch Maximum for entire length------------------ 1/2 inch
3.	Variation of the linear building lines from established position in plan	In any 20 feet --------- 1/2 inch Maximum -----------------1 inch
4.	Variation of distance between walls, columns, partitions	1/4 inch per 10 feet of distance, but not more than 1/2 inch in any one bay,and not more than 1 inch total variation
5.	Variation in the sizes and locations of sleeves, floor openings, and wall opening	Minus ---------------- 1/4 inch Plus ----------------- 1/2 inch
6.	Variation in cross-sectional dimensions of columns and beams and in the thickness of slabs and walls	Minus ----------------- 1/4 inch Plus ------------------ 1/2 inch
7.	Footings:	
	a. Variation of dimensions in plan	Minus ------------------ 1/2 inch Plus ------------------- 2 inches when formed or plus 3 inches when placed against unformed excavation
	b. Misplacement of eccentricity	2 percent of the footing width in the direction of misplacement but not more than 2 inches
	c. Reduction in thickness of specified thickness	Minus ----------------- 5 percent
8.	Variation in steps:	Riser ----------------- 1/8 inch

TABLE 1

TOLERANCES FOR FORMED SURFACES

(Note: Refer to Swimming Pool Drawing SP-2.2 for notes regarding special tighter tolerances required at pools)

a.	In a flight of stairs	Tread	1/4 inch
b.	In consecutive steps	Riser	1/16 inch
		Tread	1/8 inch

-- End of Section --

SECTION 03150

EXPANSION JOINTS, CONTRACTION JOINTS, AND WATERSTOPS

PART 1 GENERAL

1.1 REFERENCES

The publications listed below form a part of this specification to the extent referenced. The publications are referred to in the text by basic designation only.

AMERICAN HARDBOARD ASSOCIATION (AHA)

AHA ANSI/AHA A135.4	(1995) Basic Hardboard

AMERICAN SOCIETY FOR TESTING AND MATERIALS (ASTM)

ASTM C 919	(1984; R 1992) Use of Sealants in Acoustical Applications
ASTM C 920	(1995) Elastomeric Joint Sealants
ASTM D 412	(1997) Vulcanized Rubber and Thermoplastic Rubbers and Thermoplastic Elastomers - Tension
ASTM D 471	(1996) Rubber Property - Effect of Liquids
ASTM D 1190	(1996) Concrete Joint Sealer, Hot-Applied Elastic Type
ASTM D 1191	(1984; R 1994) Test Methods for Concrete Joint Sealers
ASTM D 1751	(1983; R 1991) Preformed Expansion Joint Filler for Concrete Paving and Structural Construction (Nonextruding and Resilient Bituminous Types)
ASTM D 1752	(1984; R 1996) Preformed Sponge Rubber and Cork Expansion Joint Fillers for Concrete Paving and Structural Construction
ASTM D 2628	(1991) Preformed Polychloroprene Elastomeric Joint Seals for Concrete Pavements
ASTM D 2835	(1989; R 1993) Lubricant for Installation

	of Preformed Compression Seals in Concrete Pavements
ASTM D 5249	(1995) Backer Material for Use With Cold and Hot-Applied Joint Sealants in Portland-Cement Concrete and Asphalt Joints

CORPS OF ENGINEERS (COE)

COE CRD-C 513	(1974) Corps of Engineers Specifications for Rubber Waterstops
COE CRD-C 572	(1974) Corps of Engineers Specifications for Polyvinylchloride Waterstop

1.2 SUBMITTALS

Government approval is required for submittals with a "GA" designation; submittals having an "FIO" designation are for information only. The following shall be submitted in accordance with Section 01330 SUBMITTAL PROCEDURES:

SD-01 Data

Preformed Expansion Joint Filler; FIO. Sealant; GA. Waterstops; GA.

Manufacturer's literature, including safety data sheets, for preformed fillers and the lubricants used in their installation; field-molded sealants and primers (when required by sealant manufacturer); preformed compression seals; and waterstops.

SD-04 Drawings

Waterstops; GA.

Shop drawings and fabrication drawings provided by the manufacturer or prepared by the Contractor.

SD-06 Instructions

Preformed Expansion Joint Filler; FIO. Sealant; FIO. Waterstops; FIO.

Manufacturer's recommended instructions for installing preformed fillers, field-molded sealants; preformed compression seals; and waterstops; and for splicing non-metallic waterstops.

SD-13 Certificates

Preformed Expansion Joint Filler; FIO. Sealant; GA. Waterstops; GA.

Certificates of compliance stating that the joint filler and sealant materials and waterstops conform to the requirements specified.

SD-14 Samples

Preformed Compression Seals and Lubricants; GA.

Specimens identified to indicate the manufacturer, type of material, size and quantity of material, and shipment or lot represented. Each sample shall be a piece not less than 9 ft of 1 inch nominal width or wider seal or a piece not less than 12 ft of compression seal less than 1 inch nominal width. One quart of lubricant shall be provided.

Field-Molded Type; GA.

One gallon of field-molded sealant and one quart of primer (when primer is recommended by the sealant manufacturer) identified to indicate manufacturer, type of material, quantity, and shipment or lot represented.

Non-metallic Materials; GA.

Specimens identified to indicate manufacturer, type of material, size, quantity of material, and shipment or lot represented. Each sample shall be a piece not less than 12 inch long cut from each 200 ft of finished waterstop furnished, but not less than a total of 4 ft of each type, size, and lot furnished. One splice sample of each size and type for every 50 splices made in the factory and every 10 splices made at the job site. The splice samples shall be made using straight run pieces with the splice located at the mid-length of the sample and finished as required for the installed waterstop. The total length of each splice shall be not less than 12 inches long.

1.3 DELIVERY AND STORAGE

Material delivered and placed in storage shall be stored off the ground and protected from moisture, dirt, and other contaminants. Sealants shall be delivered in the manufacturer's original unopened containers. Sealants whose shelf life has expired shall be removed from the site.

PART 2 PRODUCTS

2.1 CONTRACTION JOINT STRIPS

Contraction joint strips shall be 1/8 inch thick tempered hardboard conforming to AHA ANSI/AHA A135.4, Class 1. In lieu of hardboard strips, rigid polyvinylchloride (PVC) or high impact polystyrene (HIPS) insert strips specifically designed to induce controlled cracking in slabs on grade may be used. Such insert strips shall have removable top section.

2.2 PREFORMED EXPANSION JOINT FILLER

Expansion joint filler shall be preformed material conforming to ASTM D 1751 or ASTM D 1752. Unless otherwise indicated, filler material shall be 3/8 inch thick and of a width applicable for the joint formed. Backer material, when required, shall conform to ASTM D 5249.

2.3 SEALANT

Joint sealant shall conform to the following:

2.3.1 Preformed Polychloroprene Elastomeric Type

ASTM D 2628.

2.3.2 Lubricant for Preformed Compression Seals

ASTM D 2835.

2.3.3 Hot-Poured Type

ASTM D 1190 tested in accordance with ASTM D 1191.

2.3.4 Field Molded Type

ASTM C 920, Type M for horizontal joints or Type NS for vertical joints, Class 25, and Use NT. Bond breaker material shall be polyethylene tape, coated paper, metal foil or similar type materials. The back-up material shall be compressible, non-shrink, nonreactive with sealant, and non-absorptive material type such as extruded butyl or polychloroprene rubber.

2.4 WATERSTOPS

Intersection and change of direction waterstops shall be shop fabricated.

2.4.1 Non-Metallic Materials`

Non-metallic waterstops shall be manufactured from a prime virgin resin; reclaimed material is not acceptable. The compound shall contain plasticizers, stabilizers, and other additives to meet specified requirements. Rubber waterstops shall conform to COE CRD-C 513. Polyvinylchloride waterstops shall conform to COE CRD-C 572. Thermoplastic elastomeric rubber waterstops shall conform to ASTM D 471.

2.4.2 Non-Metallic Hydrophilic

Swellable strip type compound of polymer modified chloroprene rubber, with adhesive mounting one surface for installation, that swells upon contact with water shall conform to ASTM D 412 as follows: Tensile strength 420 psi minimum; ultimate elongation 600 percent minimum. Hardness shall be 50 minimum on the type A durometer and the volumetric expansion ratio in distilled water at 70 degrees F shall be 3 to 1 minimum.

PART 3 EXECUTION

3.1 JOINTS

Joints shall be installed at locations indicated and called for and as submitted and authorized.

3.1.1 Contraction Joints

Contraction joints may be constructed by inserting tempered hardboard strips or rigid PVC or HIPS insert strips into the plastic concrete using a steel parting bar, when necessary, or by cutting the concrete with a saw after concrete has set. Joints shall be approximately 1/8 inch wide and shall extend into the slab one-fourth the slab thickness, minimum, but not less than 1 inch.

3.1.1.1 Joint Strips

Strips shall be of the required dimensions and as long as practicable. After the first floating, the concrete shall be grooved with a tool at the joint locations. The strips shall be inserted in the groove and depressed until the top edge of the vertical surface is flush with the surface of the slab. The slab shall be floated and finished as specified. Working of the concrete adjacent to the joint shall be the minimum necessary to fill voids and consolidate the concrete. Where indicated, the top portion of the strip shall be sawed out after the curing period to form a recess for sealer. The removable section of PVC or HIPS strips shall be discarded and the insert left in place. True alignment of the strips shall be maintained during insertion.

3.1.1.2 Sawed Joints

Joint sawing shall be early enough to prevent uncontrolled cracking in the slab, but late enough that this can be accomplished without appreciable spalling. Concrete sawing machines shall be adequate in number and power, and with sufficient replacement blades to complete the sawing at the required rate. Joints shall be cut to true alignment and shall be cut in sequence of concrete placement. Sludge and cutting debris shall be removed.

3.1.2 Expansion Joints

Preformed expansion joint filler shall be used in expansion and isolation joints in slabs around columns and between slabs on grade and vertical surfaces where indicated. The filler shall extend the full slab depth, unless otherwise indicated. The edges of the joint shall be neatly finished with an edging tool of 1/8 inch radius, except where a resilient floor surface will be applied. Where the joint is to receive a sealant, the filler strips shall be installed at the proper level below the finished floor with a slightly tapered, dressed and oiled wood strip temporarily secured to the top to form a recess to the size shown on the drawings. The wood strip shall be removed after the concrete has set. Contractor may opt to use a removable expansion filler cap designed and fabricated for this purpose in lieu of the wood strip. The groove shall be thoroughly cleaned of laitance, curing compound, foreign materials, protrusions of hardened concrete, and any dust which shall be blown out of the groove with oil-free compressed air.

3.1.3 Joint Sealant

Sawed contraction joints and expansion joints in slabs shall be filled with joint sealant, unless otherwise shown. Joint surfaces shall be clean, dry, and free of oil or other foreign material which would adversely affect the

bond between sealant and concrete. Joint sealant shall be applied as recommended by the manufacturer of the sealant.

3.1.3.1 Joints With Preformed Compression Seals

Compression seals shall be installed with equipment capable of installing joint seals to the prescribed depth without cutting, nicking, twisting, or otherwise distorting or damaging the seal or concrete and with no more than 5 percent stretching of the seal. The sides of the joint and, if necessary, the sides of the compression seal shall be covered with a coating of lubricant. Butt joints shall be coated with liberal applications of lubricant.

3.1.3.2 Joints With Field-Molded Sealant

Joints shall not be sealed when the sealant material, ambient air, or concrete temperature is less than 40 degrees F. When the sealants are meant to reduce the sound transmission characteristics of interior walls, ceilings, and floors the guidance provided in ASTM C 919 shall be followed. Joints requiring a bond breaker shall be coated with curing compound or with bituminous paint. Bond breaker and back-up material shall be installed where required. Joints shall be primed and filled flush with joint sealant in accordance with the manufacturer's recommendations.

3.2 WATERSTOPS, INSTALLATION AND SPLICES

Waterstops shall be installed at the locations shown to form a continuous water-tight diaphragm. Adequate provision shall be made to support and completely protect the waterstops during the progress of the work. Any waterstop punctured or damaged shall be repaired or replaced. Exposed waterstops shall be protected during application of form release agents to avoid being coated. Suitable guards shall be provided to protect exposed projecting edges and ends of partially embedded waterstops from damage when concrete placement has been discontinued. Splices shall be made by certified trained personnel using approved equipment and procedures.

3.2.1 Non-Metallic

Fittings shall be shop made using a machine specifically designed to mechanically weld the waterstop. A miter guide, proper fixturing (profile dependant), and portable power saw shall be used to miter cut the ends to be joined to ensure good alignment and contact between joined surfaces. The splicing of straight lengths shall be done by squaring the ends to be joined. Continuity of the characteristic features of the cross section of the waterstop (ribs, tubular center axis, protrusions, etc.) shall be maintained across the splice.

3.2.1.1 Rubber Waterstop

Splices shall be vulcanized or shall be made using cold bond adhesive as recommended by the manufacturer. Splices for TPE-R shall be as specified for PVC.

3.2.1.2 Polyvinyl Chloride Waterstop

Splices shall be made by heat sealing the adjacent waterstop edges together using a thermoplastic splicing iron utilizing a non-stick surface specifically designed for waterstop welding. The correct temperature shall be used to sufficiently melt without charring the plastic. The spliced area, when cooled, shall show no signs of separation, holes, or other imperfections when bent by hand in as sharp an angle as possible.

3.2.1.3 Quality Assurance

Edge welding will not be permitted. Centerbulbs shall be compressed or closed when welding to non-centerbulb type. Waterstop splicing defects which are unacceptable include, but are not limited to the following: 1) Tensile strength less than 80 percent of parent section. 2) Free lap joints. 3) Misalignment of centerbulb, ribs, and end bulbs greater than 1/16 inch. 4) Misalignment which reduces waterstop cross section more than 15 percent. 5) Bond failure at joint deeper than 1/16 inch or 15 percent of material thickness. 6) Misalignment of waterstop splice resulting in misalignment of waterstop in excess of 1/2 inch in 10 feet. 7) Visible porosity in the weld area, including pin holes. 8) Charred or burnt material. 9) Bubbles or inadequate bonding. 10) Visible signs of splice separation when cooled splice is bent by hand at a sharp angle.

3.2.2 Non-Metallic Hydrophilic Waterstop Installation

Ends to be joined shall be miter cut with sharp knife or shears. The ends shall be adhered with cyanacryiate (super glue) adhesive. When joining hydrophilic type waterstop to PVC waterstop, the hydrophilic waterstop shall be positioned as shown on the drawings. A liberal amount of a single component hydrophilic sealant shall be applied to the junction to complete the transition.

3.2.3 Preformed Plastic Adhesive Installation

The installation of preformed plastic adhesive waterstops shall be a prime, peel, place and pour procedure. Joint surfaces shall be clean and dry before priming and just prior to placing the sealing strips. The end of each strip shall be spliced to the next strip with a 1 inch overlap; the overlap shall be pressed firmly to release trapped air. During damp or cold conditions the joint surface shall be flashed with a safe, direct flame to warm and dry the surface adequately; the sealing strips shall be dipped in warm water to soften the material to achieve maximum bond to the concrete surface.

3.3 CONSTRUCTION JOINTS

Construction joints are specified in Section 03300 CAST-IN-PLACE STRUCTURAL CONCRETE except that construction joints coinciding with expansion and contraction joints shall be treated as expansion or contraction joints as applicable.

-- End of Section --

SECTION 03200

CONCRETE REINFORCEMENT

PART 1 GENERAL

1.1 REFERENCES

The publications listed below form a part of this specification to the extent referenced. The publications are referred to in the text by basic designation only.

ACI INTERNATIONAL (ACI)

ACI 318/318R	(1999) Building Code Requirements for Structural Concrete and Commentary

AMERICAN SOCIETY FOR TESTING AND MATERIALS (ASTM)

ASTM A 53	(1996) Pipe, Steel, Black and Hot-Dipped, Zinc-Coated, Welded and Seamless
ASTM A 82	(1997a) Steel Wire, Plain, for Concrete Reinforcement
ASTM A 184/A 184M	(1996) Fabricated Deformed Steel Bar Mats for Concrete Reinforcement
ASTM A 185	(1997) Steel Welded Wire Fabric, Plain, for Concrete Reinforcement
ASTM A 615/A 615M	(1996a) Deformed and Plain Billet-Steel Bars for Concrete Reinforcement
ASTM A 675/A 675M	(1990a; R 1995) Steel Bars, Carbon, Hot-Wrought, Special Quality, Mechanical Properties
ASTM A 706/A 706M	(1998) Low-Alloy Steel Deformed and Plain Bars for Concrete Reinforcement
ASTM A 775/A 775M	(1997) Epoxy-Coated Reinforcement Steel Bars
ASTM C 1116	(1995) Fiber-Reinforced Concrete and Shotcrete

AMERICAN WELDING SOCIETY (AWS)

AWS D1.4 (1998) Structural Welding Code - Reinforcing Steel

CONCRETE REINFORCING STEEL INSTITUTE (CRSI)

CRSI MSP-1 (1997) Manual of Standard Practice

1.2 SUBMITTALS

Government approval is required for submittals with a "GA" designation; submittals having an "FIO" designation are for information only. The following shall be submitted in accordance with Section 01330 SUBMITTAL PROCEDURES:

SD-04 Drawings

Concrete Reinforcement System; GA.

Detail drawings showing reinforcing steel placement, schedules, sizes, grades, and splicing and bending details. Drawings shall show support details including types, sizes and spacing.

SD-08 Statements

Welding; FIO.

A list of qualified welders names.

SD-13 Certificates

Reinforcing Steel; FIO.

Certified copies of mill reports attesting that the reinforcing steel furnished contains no less than 25 percent recycled scrap steel and meets the requirements specified herein, prior to the installation of reinforcing steel.

1.3 WELDING

Welders shall be qualified in accordance with AWS D1.4. Qualification test shall be performed at the worksite and the Contractor shall notify the Contracting Officer 24 hours prior to conducting tests. Special welding procedures and welders qualified by others may be accepted as permitted by AWS D1.4.

1.4 DELIVERY AND STORAGE

Reinforcement and accessories shall be stored off the ground on platforms, skids, or other supports.

PART 2 PRODUCTS

2.1 DOWELS

Dowels for pavements shall conform to ASTM A 675/A 675M, Grade 80. Steel pipe conforming to ASTM A 53, Schedule 80, may be used as dowels provided the ends are closed with metal or plastic inserts or with mortar.

2.2 FABRICATED BAR MATS

Fabricated bar mats shall conform to ASTM A 184/A 184M.

2.3 REINFORCING STEEL

Reinforcing steel shall be deformed bars conforming to ASTM A 615/A 615M, except use ASTM A 706/A 706M wherever bars are indicated to be welded, grades and sizes as indicated. Cold drawn wire used for spiral reinforcement shall conform to ASTM A 82. In highly corrosive environments or when directed by the Contracting Officer, reinforcing steel shall conform to ASTM A 775/A 775M as appropriate; highly corrosive environments shall be all pedestrian bridges (slabs and abutments). Do no use epoxy-coated rebar at swimming pool or hydrotherapy pool tanks.

2.4 WELDED WIRE FABRIC

Welded wire fabric shall conform to ASTM A 185.

2.5 WIRE TIES

Wire ties shall be 16 gauge or heavier black annealed steel wire.

2.6 SUPPORTS

Bar supports for formed surfaces shall be designed and fabricated in accordance with CRSI MSP-1 and shall be steel or precast concrete blocks. Precast concrete blocks shall have wire ties and shall be not less than 4 inches square when supporting reinforcement on ground. Precast concrete block shall have compressive strength equal to that of the surrounding concrete. Where concrete formed surfaces will be exposed to weather or where surfaces are to be painted, steel supports within 1/2 inch of concrete surface shall be galvanized, plastic protected or of stainless steel. Concrete supports used in concrete exposed to view shall have the same color and texture as the finish surface. For slabs on grade, supports shall be precast concrete blocks, plastic coated steel fabricated with bearing plates, or specifically designed wire-fabric supports fabricated of plastic.

2.7 SYNTHETIC FIBER REINFORCEMENT

Synthetic fiber shall be polypropylene with a denier less than 100 and a nominal fiber length of 2 inches.

PART 3 EXECUTION

3.1 REINFORCEMENT

Reinforcement shall be fabricated to shapes and dimensions shown and shall conform to the requirements of ACI 318/318R. Reinforcement shall be cold

bent unless otherwise authorized. Bending may be accomplished in the field or at the mill. Bars shall not be bent after embedment in concrete. Safety caps shall be placed on all exposed ends of vertical concrete reinforcement bars that pose a danger to life safety. Wire tie ends shall face away from the forms.

3.1.1 Placement

Reinforcement shall be free from loose rust and scale, dirt, oil, or other deleterious coating that could reduce bond with the concrete. Reinforcement shall be placed in accordance with ACI 318/318R at locations shown plus or minus one bar diameter. Reinforcement shall not be continuous through expansion joints and shall be as indicated through construction or contraction joints. Concrete coverage shall be as indicated or as required by ACI 318/318R. If bars are moved more than one bar diameter to avoid interference with other reinforcement, conduits or embedded items, the resulting arrangement of bars, including additional bars required to meet structural requirements, shall be approved before concrete is placed.

3.1.2 Splicing

Splices of reinforcement shall conform to ACI 318/318R and shall be made only as required or indicated. Splicing shall be by lapping or by mechanical or welded butt connection; except that lap splices shall not be used for bars larger than No. 11 unless otherwise indicated. Welding shall conform to AWS D1.4. Welded butt splices shall be full penetration butt welds. Lapped bars shall be placed in contact and securely tied or spaced transversely apart to permit the embedment of the entire surface of each bar in concrete. Lapped bars shall not be spaced farther apart than one-fifth the required length of lap or 6 inches. Mechanical butt splices shall be in accordance with the recommendation of the manufacturer of the mechanical splicing device. Butt splices shall develop 125 percent of the specified minimum yield tensile strength of the spliced bars or of the smaller bar in transition splices. Bars shall be flame dried before butt splicing. Adequate jigs and clamps or other devices shall be provided to support, align, and hold the longitudinal centerline of the bars to be butt spliced in a straight line.

3.2 WELDED-WIRE FABRIC PLACEMENT

Welded-wire fabric shall be placed in slabs as indicated. Fabric placed in slabs on grade shall be continuous between expansion, construction, and contraction joints. Fabric placement at joints shall be as indicated. Lap splices shall be made in such a way that the overlapped area equals the distance between the outermost crosswires plus 2 inches. Laps shall be staggered to avoid continuous laps in either direction. Fabric shall be wired or clipped together at laps at intervals not to exceed 4 feet. Fabric shall be positioned by the use of supports.

3.3 DOWEL INSTALLATION

Dowels shall be installed in slabs on grade at locations indicated and at right angles to joint being doweled. Dowels shall be accurately positioned

and aligned parallel to the finished concrete surface before concrete placement. Dowels shall be rigidly supported during concrete placement. One end of dowels shall be coated with a bond breaker.

3.4 SYNTHETIC FIBER REINFORCED CONCRETE

Fiber reinforcement shall be added to the concrete mix for all pedestrian bridge deck slabs in accordance with the applicable sections of ASTM C 1116 and the recommendations of the manufacturer, and in an amount of 0.15 percent by volume.

-- End of Section --

SECTION 03300

CAST-IN-PLACE STRUCTURAL CONCRETE

PART 1 GENERAL

1.1 REFERENCES

The publications listed below form a part of this specification to the extent referenced. The publications are referred to in the text by basic designation only.

ACI INTERNATIONAL (ACI)

ACI 117/117R	(1990; Errata) Standard Tolerances for Concrete Construction and Materials
ACI 211.1	(1991) Standard Practice for Selecting Proportions for Normal, Heavyweight, and Mass Concrete
ACI 211.2	(1998) Standard Practice for Selecting Proportions for Structural Lightweight Concrete
ACI 213R	(1987) Guide for Structural Lightweight Aggregate Concrete
ACI 214.3R	(1988) Simplified Version of the Recommended Practice for Evaluation of Strength Test Results
ACI 303R	(1991) Guide to Cast-In-Place Architectural Concrete Practice
ACI 305R	(1999) Hot Weather Concreting
ACI 318/318R	(1999) Building Code Requirements for Reinforced Concrete and Commentary

AMERICAN ASSOCIATION OF STATE HIGHWAY AND TRANSPORTATION OFFICIALS (AASHTO)

AASHTO M 182	(1991) Burlap Cloth Made From Jute or Kenaf

AMERICAN SOCIETY FOR TESTING AND MATERIALS (ASTM)

ASTM C 31	(1996) Making and Curing Concrete Test Specimens in the Field

ASTM C 33	(1997) Concrete Aggregates
ASTM C 39	(1996) Compressive Strength of Cylindrical Concrete Specimens
ASTM C 42	(1994) Obtaining and Testing Drilled Cores and Sawed Beams of Concrete
ASTM C 78	(1994) Flexural Strength of Concrete (Using Simple Beam With Third-Point Loading)
ASTM C 94	(1998) Ready-Mixed Concrete
ASTM C 136	(1996a) Sieve Analysis of Fine and Coarse Aggregates
ASTM C 143	(1990a) Slump of Hydraulic Cement Concrete
ASTM C 150	(1997a) Portland Cement
ASTM C 171	(1997) Sheet Materials for Curing Concrete
ASTM C 172	(1997) Sampling Freshly Mixed Concrete
ASTM C 173	(1994a) Air Content of Freshly Mixed Concrete by the Volumetric Method
ASTM C 192	(1995) Making and Curing Concrete Test Specimens in the Laboratory
ASTM C 231	(1997) Air Content of Freshly Mixed Concrete by the Pressure Method
ASTM C 260	(1995) Air-Entraining Admixtures for Concrete
ASTM C 309	(1997) Liquid Membrane-Forming Compounds for Curing Concrete
ASTM C 330	(1997) Lightweight Aggregates for Structural Concrete
ASTM C 494	(1992) Chemical Admixtures for Concrete
ASTM C 567	(1991) Unit Weight of Structural Lightweight Concrete
ASTM C 618	(1997) Coal Fly Ash and Raw or Calcined Natural Pozzolan for Use as a Mineral Admixture in Portland Cement Concrete
ASTM C 881	(1990) Epoxy-Resin-Base Bonding Systems for Concrete

ASTM C 940	(1989) Expansion and Bleeding of Freshly Mixed Grouts for Preplaced-Aggregate Concrete in the Laboratory
ASTM C 1017	(1992) Chemical Admixtures for Use in Producing Flowing Concrete
ASTM C 1059	(1991) Latex Agents for Bonding Fresh to Hardened Concrete
ASTM C 1064	(1986; R 1993) Temperature of Freshly Mixed Portland Cement Concrete
ASTM C 1077	(1996) Laboratories Testing Concrete and Concrete Aggregates for Use in Construction and Criteria for Laboratory Evaluation
ASTM C 1107	(1997) Packaged Dry, Hydraulic-Cement Grout (Nonshrink)
ASTM C 1116	(1995) Fiber-Reinforced Concrete and Shotcrete
ASTM D 75	(1987; R 1992) Sampling Aggregates
ASTM D 1751	(1983; R 1991) Preformed Expansion Joint Filler for Concrete Paving and Structural Construction (Nonextruding and Resilient Bituminous Types)
ASTM D 1752	(1984; R 1996) Preformed Sponge Rubber and Cork Expansion Joint Fillers for Concrete Paving and Structural Construction
ASTM E 96	(1995) Water Vapor Transmission of Materials

CORPS OF ENGINEERS (COE)

COE CRD-C 94	(1995) Surface Retarders
COE CRD-C 104	(1980) Method of Calculation of the Fineness Modulus of Aggregate
COE CRD-C 400	(1963) Requirements for Water for Use in Mixing or Curing Concrete
COE CRD-C 521	(1981) Standard Test Method for Frequency and Amplitude of Vibrators for Concrete
COE CRD-C 540	(1971; R 1981) Standard Specification for Nonbituminous Inserts for Contraction

	Joints in Portland Cement Concrete Airfield Pavements, Sawable Type
COE CRD-C 572	(1974) Corps of Engineers Specifications for Polyvinylchloride Waterstop

NATIONAL INSTITUTE OF STANDARDS AND TECHNOLOGY (NIST)

NIST HB 44	(1995) NIST Handbook 44: Specifications, Tolerances, and Other Technical Requirements for Weighing and Measuring Devices

NATIONAL READY-MIXED CONCRETE ASSOCIATION (NRMCA)

NRMCA TMMB-01	(1992) Truck Mixer Agitator and Front Discharge Concrete Carrier Standards of the Truck Mixer Manufacturers Bureau
NRMCA CPMB 100	(1990) Concrete Plant Standards
NRMCA QC 3	(1984) Quality Control Manual: Section 3, Plant Certifications Checklist: Certification of Ready Mixed Concrete Production Facilities

1.2 SUBMITTALS

Government approval is required for submittals with a "GA" designation; submittals having an "FIO" designation are for information only. The following shall be submitted in accordance with Section 01330 SUBMITTAL PROCEDURES:

SD-08 Statements

Mixture Proportions; GA.

The results of trial mixture design studies along with a statement giving the maximum nominal coarse aggregate size and the proportions of ingredients that will be used in the manufacture of each strength or class of concrete, at least 21 days prior to commencing concrete placing operations. Aggregate weights shall be based on the saturated surface dry condition. The statement shall be accompanied by test results from an approved independent commercial testing laboratory, showing that mixture design studies have been made with materials proposed for the project and that the proportions selected will produce concrete of the qualities indicated. No substitutions shall be made in the materials used in the mixture design studies without additional tests to show that the quality of the concrete is satisfactory.

Lightweight Aggregate Concrete; GA.

Written recommendations from lightweight aggregate supplier on batching and mixing cycles.

SD-09 Reports

Testing and Inspection for Contractor Quality Control; GA.

Certified copies of laboratory test reports, including mill tests and all other test data, for portland cement, pozzolan, aggregate, admixtures, and curing compound proposed for use on this project.

SD-13 Certificates

Qualifications; GA.

Written documentation for Contractor Quality Control personnel.

SD-14 Samples

Surface Retarder; FIO.

Surface retarder material with manufacturer's instructions for application in conjunction with air-water cutting.

1.3 QUALIFICATIONS

Contractor Quality Control personnel assigned to concrete construction shall be American Concrete Institute (ACI) Certified Workmen in one of the following grades or shall have written evidence of having completed similar qualification programs:

Concrete Field Testing Technician, Grade I
Concrete Laboratory Testing Technician, Grade I or II
Concrete Construction Inspector, Level II

The foreman or lead journeyman of the flatwork finishing crew shall have similar qualification for ACI Concrete Flatwork Technician/Finisher or equal, with written documentation.

1.4 FIELD TEST PANELS

Field test panels shall be constructed prior to beginning of work using the materials and procedures proposed for use on the job, to demonstrate the results to be attained. The quality and appearance of each panel shall be subject to the approval of the Contracting Officer, and, if not judged satisfactory, additional panels shall be constructed until approval is attained. Formed or finished surfaces in the completed structure shall match the quality and appearance of the approved field example.

1.4.1 Sample Wall Panels

One sample panel at least 4 feet by 5 feet and 6 inches thick shall be constructed to demonstrate sand-blasted swimming pool construction formed finish. Panels shall be located adjacent to one of the swimming pools. Each panel shall include a full length and full width joint line and shall

have at least two voids each at least 12 inches by 12 inches by 3 inches deep either impressed in the concrete as placed or chipped in the hardened concrete. After the concrete is 7 days old, the voids shall be patched to demonstrate the effectiveness and the appearance of the Contractor's repair procedures.

1.5 SPECIAL REQUIREMENTS

A pre-installation meeting with the Contracting Officer will be required at least 20 days prior to start of concrete construction. The Contractor shall be responsible for calling the meeting; the Project Superintendent and active installation personnel shall be present.

1.6 GENERAL REQUIREMENTS

1.6.1 Tolerances

Except as otherwise specified herein, tolerances for concrete batching, mixture properties, and construction as well as definition of terms and application practices shall be in accordance with ACI 117/117R. Level and grade tolerance measurements of slabs shall be made as soon as possible after finishing; when forms or shoring are used, the measurements shall be made prior to removal.

1.6.1.1 Floors

For the purpose of this Section the following terminology correlation between ACI 117/117R and this Section shall apply:

Floor Profile Quality Classification From ACI 117/117R	This Section
Conventional Bullfloated	Same
Conventional Straightedged	Same
Flat	Float Finish or Trowel Finish

Levelness tolerance shall not apply where design requires floors to be sloped to drains or sloped for other reasons.

1.6.1.2 Floors by the Straightedge System

The flatness of the floors shall be carefully controlled and the tolerances shall be measured by the straightedge system as specified in paragraph 4.5.7 of ACI 117/117R, using a 10 foot straightedge, within 72 hours after floor slab installation and before shores and/or forms are removed. The listed tolerances shall be met at any and every location at which the straightedge can be placed.

Bullfloated 1/2 inch.
Straightedged 5/16 inch.
Float Finish 1/8 inch.
Trowel Finish 1/8 inch.

1.6.2 Strength Requirements and w/c Ratio

1.6.2.1 Strength Requirements

Specified compressive strength (f'c) shall be as follows:

COMPRESSIVE STRENGTH	STRUCTURE OR PORTION OF STRUCTURE
4000 psi at 28 days	All normal and lightweight concrete, and normal-weight pedestrian bridge decks and abutments, unless noted otherwise.
3000 psi at 28 days	All interior equipment pads (pads to be lightweight concrete where on framed slabs and normal-weight concrete elsewhere.
1000 psi at 28 days	Lean concrete where called for.

Concrete slabs on-grade shall have a 28-day compressive strength of 4,000 psi. Concrete made with high-early strength cement shall have a 7-day strength equal to the specified 28-day strength for concrete made with Type I or II portland cement. Compressive strength shall be determined in accordance with ASTM C 39. Flexural strength shall be determined in accordance with ASTM C 78.

a. Evaluation of Concrete Compressive Strength. Compressive strength specimens (6 by 12 inch cylinders) shall be fabricated by the Contractor and laboratory cured in accordance with ASTM C 31 and tested in accordance with ASTM C 39. The strength of the concrete will be considered satisfactory so long as the average of all sets of three consecutive test results equals or exceeds the specified compressive strength f'c and no individual test result falls below the specified strength f'c by more than 500 psi. A "test" is defined as the average of two companion cylinders, or if only one cylinder is tested, the results of the single cylinder test. Additional analysis or testing, including taking cores and/or load tests may be required at the Contractor's expense when the strength of the concrete in the structure is considered potentially deficient.

b. Investigation of Low-Strength Compressive Test Results. When any strength test of standard-cured test cylinders falls below the specified strength requirement by more than 500 psi or if tests of field-cured cylinders indicate deficiencies in protection and curing, steps shall be taken to assure that the load-carrying capacity of the structure is not jeopardized. When the strength of concrete in place is considered potentially deficient, cores shall be obtained and tested in accordance with ASTM C 42. At least three representative cores shall be taken from each member or area of concrete in place that is considered potentially deficient. The location of cores will be determined by the

Contracting Officer to least impair the strength of the structure. Concrete in the area represented by the core testing will be considered adequate if the average strength of the cores is equal to at least 85 percent of the specified strength requirement and if no single core is less than 75 percent of the specified strength requirement. Non-destructive tests (tests other than test cylinders or cores) shall not be used as a basis for acceptance or rejection. The Contractor shall perform the coring and repair the holes. Cores will be tested by the Government.

c. Load Tests. If the core tests are inconclusive or impractical to obtain or if structural analysis does not confirm the safety of the structure, load tests may be directed by the Contracting Officer in accordance with the requirements of ACI 318/318R. Concrete work evaluated by structural analysis or by results of a load test as being understrength shall be corrected in a manner satisfactory to the Contracting Officer. All investigations, testing, load tests, and correction of deficiencies shall be performed by and at the expense of the Contractor and must be approved by the Contracting Officer, except that if all concrete is found to be in compliance with the drawings and specifications, the cost of investigations, testing, and load tests will be at the expense of the Government.

1.6.2.2 Water-Cement Ratio

Maximum water-cement ratio (w/c) for normal weight concrete shall be as follows:

WATER-CEMENT RATIO, BY WEIGHT	STRUCTURE OR PORTION OF STRUCTURE
0.40	Bridge decks and abutments; exterior pavements; sidewalks; steps, curbs, gutters, and similar horizontal exterior elements; and site retaining walls
0.45	Concrete exposed to freezing except as listed above
0.50	All concrete other than that listed above

These w/c's may cause higher strengths than that required above for compressive or flexural strength. The maximum w/c required will be the equivalent w/c as determined by conversion from the weight ratio of water to cement plus pozzolan, by the weight equivalency method as described in ACI 211.1.

1.6.3 Air Entrainment

Except as otherwise specified for lightweight concrete, all normal weight concrete shall be air entrained to contain between 4 and 7 percent total air, except that when the nominal maximum size coarse aggregate is 3/4 inch

or smaller it shall be between 4.5 and 7.5 percent. Specified air content shall be attained at point of placement into the forms. Air content for normal weight concrete shall be determined in accordance with ASTM C 231. Lightweight concrete in the structure shall be air-entrained with a total air content of 4.5 to 7.5 percent, except that if the nominal maximum size coarse aggregate is 3/8 inch or less, the air content shall be 5.5 to 8.5 percent. Air content for lightweight concrete shall be determined in accordance with ASTM C 173.

1.6.4 Slump

Slump of the concrete, as delivered to the point of placement into the forms, shall be within the following limits. Slump shall be determined in accordance with ASTM C 143.

	Slump	
Structural Element	Minimum	Maximum
Walls, columns and beams	2 in.	4 in.
Foundation walls, substructure walls, footings, slabs	1 in.	3 in.
Any structural concrete approved for placement by pumping:		
At pump	2 in.	6 in.
At discharge of line	1 in.	4 in.

When use of a plasticizing admixture conforming to ASTM C 1017 or when a Type F or G high range water reducing admixture conforming to ASTM C 494 is permitted to increase the slump of concrete, concrete shall have a slump of 2 to 4 inches before the admixture is added and a maximum slump of 8 inches at the point of delivery after the admixture is added. For troweled floors, slump of structural lightweight concrete with normal weight sand placed by pump shall not exceed 5 inches at the point of placement. For other slabs, slump of lightweight concrete shall not exceed 4 inches at point of placement.

1.6.5 Concrete Temperature

The temperature of the concrete as delivered shall not exceed 90 degrees F. When the ambient temperature during placing is 40 degrees F or less, or is expected to be at any time within 6 hours after placing, the temperature of the concrete as delivered shall be between 55 and 75 degrees F.

1.6.6 Size of Coarse Aggregate

The largest feasible nominal maximum size aggregate (NMSA) specified in paragraph AGGREGATES shall be used in each placement. However, nominal maximum size of aggregate shall not exceed any of the following: three-fourths of the minimum cover for reinforcing bars, three-fourths of the minimum clear spacing between reinforcing bars, one-fifth of the

narrowest dimension between sides of forms, or one-third of the thickness of slabs or toppings.

1.6.7 Special Properties and Products

Concrete may contain admixtures other than air entraining agents, such as water reducers, superplasticizers, or set retarding agents to provide special properties to the concrete, if specified or approved. Any of these materials to be used on the project shall be used in the mix design studies.

1.6.8 Lightweight Aggregate Structural Concrete

Lightweight aggregate structural concrete shall conform to the requirements specified for normal weight concrete except as specified herein. Specified compressive strength shall be at least 4000 at 28 days, as determined by test specimens that have been air dried at 50 percent relative humidity for the last 21 days. Air-dry unit weight shall be not over 115 at 28 days as determined by ASTM C 567. However, fresh unit weight shall be used for acceptance during concreting, using a correlation factor between the two types of unit weight as determined during mixture design studies. Lightweight aggregate non-structural non-composite concrete floor or roof fill shall have a 28-day compressive strength of at least 3000 psi and an air-dry unit weight not exceeding 115 pcf.

1.7 MIXTURE PROPORTIONS

Concrete shall be composed of portland cement, other cementitious and pozzolanic materials as specified, aggregates, water and admixtures as specified.

1.7.1 Proportioning Studies for Normal Weight Concrete

Trial design batches, mixture proportioning studies, and testing requirements for various classes and types of concrete specified shall be the responsibility of the Contractor. Except as specified for flexural strength concrete, mixture proportions shall be based on compressive strength as determined by test specimens fabricated in accordance with ASTM C 192 and tested in accordance with ASTM C 39. Samples of all materials used in mixture proportioning studies shall be representative of those proposed for use in the project and shall be accompanied by the manufacturer's or producer's test reports indicating compliance with these specifications. Trial mixtures having proportions, consistencies, and air content suitable for the work shall be made based on methodology described in ACI 211.1, using at least three different water-cement ratios for each type of mixture, which will produce a range of strength encompassing those required for each class and type of concrete required on the project. The maximum water-cement ratios required in the paragraph Maximum Allowable w/c Ratio will be the equivalent water-cement ratio as determined by conversion from the weight ratio of water to cement plus pozzolan, by the weight equivalency method as described in ACI 211.1. If pozzolan is used in the concrete mixture, the minimum pozzolan content shall be 15 percent by weight of the total cementitious material, and the maximum shall be 35 percent. Laboratory trial mixtures shall be designed for maximum permitted slump and air content. Separate sets of trial mixture studies shall be

made for each combination of cementitious materials and each combination of admixtures proposed for use. No combination of either shall be used until proven by such studies, except that, if approved in writing and otherwise permitted by these specifications, an accelerator or a retarder may be used without separate trial mixture study. Separate trial mixture studies shall also be made for concrete for any conveying or placing method proposed which requires special properties and for concrete to be placed in unusually difficult placing locations. The temperature of concrete in each trial batch shall be reported. For each water-cement ratio, at least three test cylinders for each test age shall be made and cured in accordance with ASTM C 192. They shall be tested at 7 and 28 days in accordance with ASTM C 39. From these test results, a curve shall be plotted showing the relationship between water-cement ratio and strength for each set of trial mix studies. In addition, a curve shall be plotted showing the relationship between 7 day and 28 day strengths. Each mixture shall be designed to promote easy and suitable concrete placement, consolidation and finishing, and to prevent segregation and excessive bleeding.

1.7.2 Proportioning Studies for Lightweight Aggregate Structural Concrete

Trial design batches, mixture proportioning studies, and testing requirements shall conform to the requirements specified in paragraph Proportioning Studies for Normal Weight Concrete, except as follows. Trial mixtures having proportions, consistencies and air content suitable for the work shall be made based on methodology described in ACI 211.2, using at least three different cement contents. Trial mixes shall be proportioned to produce air dry unit weight and concrete strengths specified in paragraph GENERAL REQUIREMENTS. Trial mixtures shall be proportioned for maximum permitted slump and air content. Test specimens and testing shall be as specified for normal weight concrete except that 28-day compressive strength shall be determined from test cylinders that have been air dried at 50 percent relative humidity for the last 21 days. Air dry unit weight shall be determined in accordance with ASTM C 567 and shall be designed to be at least 2.0 pcf less than the maximum specified air dry unit weight in paragraph GENERAL REQUIREMENTS. Curves shall be plotted using these results showing the relationship between cement factor and strength and air dry unit weight. Normal weight fine aggregate may be substituted for part or all of the lightweight fine aggregate, provided the concrete meets the strength and unit weight. A correlation shall also be developed showing the ratio between air dry unit weight and fresh concrete unit weight for each mix.

1.7.3 Average Compressive Strength Required for Mixtures

The mixture proportions selected during mixture design studies shall produce a required average compressive strength (f'cr) exceeding the specified compressive strength (f'c) by the amount indicated below. This required average compressive strength, f'cr, will not be a required acceptance criteria during concrete production. However, whenever the daily average compressive strength at 28 days drops below f'cr during concrete production, or daily average 7-day strength drops below a strength correlated with the 28-day f'cr, the mixture shall be adjusted, as approved, to bring the daily average back up to f'cr. During production, the required f'cr shall be adjusted, as appropriate, based on the standard

deviation being attained on the job.

1.7.3.1 Computations from Test Records

Where a concrete production facility has test records, a standard deviation shall be established in accordance with the applicable provisions of ACI 214.3R. Test records from which a standard deviation is calculated shall represent materials, quality control procedures, and conditions similar to those expected; shall represent concrete produced to meet a specified strength or strengths (f'c) within 1,000 psi of that specified for proposed work; and shall consist of at least 30 consecutive tests. A strength test shall be the average of the strengths of two cylinders made from the same sample of concrete and tested at 28 days. Required average compressive strength f'cr used as the basis for selection of concrete proportions shall be the larger of the equations that follow using the standard deviation as determined above:

f'cr = f'c + 1.34S where units are in psi

f'cr = f'c + 2.33S - 500 where units are in psi

Where S = standard deviation

Where a concrete production facility does not have test records meeting the requirements above but does have a record based on 15 to 29 consecutive tests, a standard deviation shall be established as the product of the calculated standard deviation and a modification factor from the following table:

NUMBER OF TESTS	MODIFICATION FACTOR FOR STANDARD DEVIATION
15	1.16
20	1.08
25	1.03
30 or more	1.00

1.7.3.2 Computations without Previous Test Records

When a concrete production facility does not have sufficient field strength test records for calculation of the standard deviation, the required average strength f'cr shall be determined as follows:

a. If the specified compressive strength f'c is less than 3,000 psi,

f'cr = f'c + 1000 psi

b. If the specified compressive strength f'c is 3,000 to 5,000 psi,

f'cr = f'c + 1,200 psi

1.8 STORAGE OF MATERIALS

Cement and other cementitious materials shall be stored in weathertight

buildings, bins, or silos which will exclude moisture and contaminants and keep each material completely separated. Aggregate stockpiles shall be arranged and used in a manner to avoid excessive segregation and to prevent contamination with other materials or with other sizes of aggregates. Aggregate shall not be stored directly on ground unless a sacrificial layer is left undisturbed. Reinforcing bars and accessories shall be stored above the ground on platforms, skids or other supports. Other materials shall be stored in such a manner as to avoid contamination and deterioration. Admixtures which have been in storage at the project site for longer than 6 months or which have been subjected to freezing shall not be used unless retested and proven to meet the specified requirements. Materials shall be capable of being accurately identified after bundles or containers are opened.

1.9 GOVERNMENT ASSURANCE INSPECTION AND TESTING

Day-to day inspection and testing shall be the responsibility of the Contractor Quality Control (CQC) staff. However, representatives of the Contracting Officer can and will inspect construction as considered appropriate and will monitor operations of the Contractor's CQC staff. Government inspection or testing will not relieve the Contractor of any of his CQC responsibilities.

1.9.1 Materials

The Government will sample and test aggregates, cementitious materials, other materials, and concrete to determine compliance with the specifications as considered appropriate. The Contractor shall provide facilities and labor as may be necessary for procurement of representative test samples. Samples of aggregates will be obtained at the point of batching in accordance with ASTM D 75. Other materials will be sampled from storage at the jobsite or from other locations as considered appropriate. Samples may be placed in storage for later testing when appropriate.

1.9.2 Fresh Concrete

Fresh concrete will be sampled as delivered in accordance with ASTM C 172 and tested in accordance with these specifications, as considered necessary.

1.9.3 Hardened Concrete

Tests on hardened concrete will be performed by the Government when such tests are considered necessary.

1.9.4 Inspection

Concrete operations may be tested and inspected by the Government as the project progresses. Failure to detect defective work or material will not prevent rejection later when a defect is discovered nor will it obligate the Government for final acceptance.

PART 2 PRODUCTS

2.1 CEMENTITIOUS MATERIALS

Cementitious Materials shall be portland cement, or portland cement in combination with pozzolan and shall conform to appropriate specifications listed below. Use of cementitious materials in concrete which will have surfaces exposed in the completed structure shall be restricted so there is no change in color, source, or type of cementitious material.

2.1.1 Portland Cement

ASTM C 150, Type I with a maximum 15 percent amount of tricalcium aluminate, or Type II including false set requirements. White portland cement shall meet the above requirements except that it may be Type I, Type II or Type III low alkali. White Type III shall be used only in specific areas of the structure, when approved in writing.

2.1.2 High-Early-Strength Portland Cement

ASTM C 150, Type III with tricalcium aluminate limited to 8 percent. Type III cement shall be used only in isolated instances and only when approved in writing.

2.1.3 Pozzolan (Fly Ash)

ASTM C 618, Class C with the optional requirements for multiple factor, drying shrinkage, and uniformity from Table 2A of ASTM C 618. Requirement for maximum alkalies from Table 1A of ASTM C 618 shall apply. If pozzolan is used, it shall never be less than 15 percent nor more than 35 percent by weight of the total cementitious material.

2.2 AGGREGATES

Aggregates shall conform to the following.

2.2.1 Fine Aggregate

Fine aggregate shall conform to the quality and gradation requirements of ASTM C 33.

2.2.2 Coarse Aggregate

Coarse aggregate shall conform to ASTM C 33, Class 5S, size designation 67; size 57 or 467, to suit concrete thickness and reinforcing per ACI 318 (para. 3.3.2), may be used if approved by Contracting Officer.

2.2.3 Lightweight Aggregate

Lightweight fine and coarse aggregate shall conform to the quality and gradation requirements of ASTM C 330, size 3/4 inch to No. 4 for coarse aggregate. Lightweight aggregate shall be prewetted in accordance with the Manufacturer's instructions unless otherwise specified. For pumped concrete, prewetting shall be sufficient to ensure that slump loss through the pump line does not exceed 4 inches.

2.3 CHEMICAL ADMIXTURES

Chemical admixtures, when required or permitted, shall conform to the appropriate specification listed. Admixtures shall be furnished in liquid form and of suitable concentration for easy, accurate control of dispensing. Calcium chloride, or admixtures containing calcium chloride, shall not be used.

2.3.1 Air-Entraining Admixture

ASTM C 260 and shall consistently entrain the air content in the specified ranges under field conditions.

2.3.2 Water-Reducing Admixture

ASTM C 494, Type A, except that the 6-month and 1-year compressive and flexural strength tests are waived.

2.3.3 High-Range Water Reducer

ASTM C 494, Type F, except that the 6-month and 1-year strength requirements are waived. The admixture shall be used only when approved in writing, such approval being contingent upon particular mixture control as described in the Contractor's Quality Control Plan and upon performance of separate mixture design studies.

2.3.4 Surface Retarder

COE CRD-C 94.

2.4 CURING MATERIALS

2.4.1 Impervious-Sheet

Impervious-sheet materials shall conform to ASTM C 171, type optional, except, that polyethylene sheet shall not be used.

2.4.2 Membrane-Forming Compound

Membrane-Forming curing compound shall conform to ASTM C 309, Type 1-D or 2, except that only a styrene acrylate or chlorinated rubber compound meeting Class B requirements shall be used for surfaces that are to be painted or are to receive bituminous roofing, or waterproofing, or floors that are to receive adhesive applications of resilient flooring. The curing compound selected shall be compatible with any subsequent paint, roofing, waterproofing, or flooring specified. Nonpigmented compound shall contain a fugitive dye, and shall have the reflective requirements in ASTM C 309 waived.

2.4.3 Burlap and Cotton Mat

Burlap and cotton mat used for curing shall conform to AASHTO M 182.

2.5 WATER

Water for mixing and curing shall be fresh, clean, potable, and free of injurious amounts of oil, acid, salt, or alkali, except that non-potable water may be used if it meets the requirements of COE CRD-C 400.

2.6 NONSHRINK GROUT

Nonshrink grout shall conform to ASTM C 1107, Grade A, B, or C, and shall be a commercial formulation suitable for the proposed application.

2.7 LATEX BONDING AGENT

Latex agents for bonding fresh to hardened concrete shall conform to ASTM C 1059.

2.8 EPOXY RESIN

Epoxy resins for use in repairs shall conform to ASTM C 881, Type V, Grade 2. Class as appropriate to the existing ambient and surface temperatures.

2.9 EMBEDDED ITEMS

Embedded items shall be of the size and type indicated or as needed for the application. Dovetail slots shall be galvanized steel. Hangers for suspended ceilings shall be as specified in Section 09510 ACOUSTICAL CEILINGS. Inserts for shelf angles and bolt hangers shall be of malleable iron or cast or wrought steel.

2.10 FLOOR HARDENER

Floor hardener shall be a colorless aqueous solution containing zinc silicofluoride, magnesium silicofluoride, or sodium silicofluoride. These silicofluorides can be used individually or in combination. Proprietary hardeners may be used if approved in writing by the Contracting Officer.

2.11 VAPOR BARRIER

Vapor barrier shall be polyethylene sheeting with a minimum thickness of 6 mils or other equivalent material having a vapor permeance rating not exceeding 0.5 perms as determined in accordance with ASTM E 96.

2.12 JOINT MATERIALS

2.12.1 Joint Fillers, Sealers, and Waterstops

Expansion joint fillers shall be preformed materials conforming to ASTM D 1751 or ASTM D 1752, and materials for waterstops shall all be in accordance with Section 03150 EXPANSION JOINTS, CONTRACTION JOINTS, AND WATERSTOPS. Materials for and sealing of joints shall conform to the requirements of Section 07900 JOINT SEALING.

2.12.2 Contraction Joints in Slabs

Nonsawable joint inserts shall have sufficient stiffness to permit

placement in plastic concrete without undue deviation from a straight line and shall conform to the physical requirements of COE CRD-C 540, with the exception of Section 3.4 "Resistance to Sawing". Plastic inserts shall be polyvinyl chloride conforming to the materials requirements of COE CRD-C 572.

2.13 SYNTHETIC FIBERS FOR REINFORCING

Synthetic fibers shall conform to ASTM C 1116, Type III, Synthetic Fiber, and as follows. Fibers shall be 100 percent virgin polypropylene fibrillated fibers containing no reprocessed olefin materials. Fibers shall have a specific gravity of 0.9, a minimum tensile strength of 70 ksi graded per manufacturer, and specifically manufactured to an optimum gradation for use as concrete secondary reinforcement.

PART 3 EXECUTION

3.1 PREPARATION FOR PLACING

Before commencing concrete placement, the following shall be performed. Surfaces to receive concrete shall be clean and free from frost, ice, mud, and water. Forms shall be in place, cleaned, coated, and adequately supported, in accordance with Section 03100 STRUCTURAL CONCRETE FORMWORK. Reinforcing steel shall be in place, cleaned, tied, and adequately supported, in accordance with Section 03200 CONCRETE REINFORCEMENT. Transporting and conveying equipment shall be in-place, ready for use, clean, and free of hardened concrete and foreign material. Equipment for consolidating concrete shall be at the placing site and in proper working order. Equipment and material for curing and for protecting concrete from weather or mechanical damage shall be at the placing site, in proper working condition and in sufficient amount for the entire placement. When hot, windy conditions during concreting appear probable, equipment and material shall be at the placing site to provide windbreaks, shading, fogging, or other action to prevent plastic shrinkage cracking or other damaging drying of the concrete.

3.1.1 Foundations

3.1.1.1 Concrete on Earth Foundations

Earth (subgrade, base, or subbase courses) surfaces upon which concrete is to be placed shall be clean, damp, and free from debris, frost, ice, and standing or running water. Prior to placement of concrete, the foundation shall be well drained and shall be satisfactorily graded and uniformly compacted.

3.1.1.2 Preparation of Rock

Rock surfaces upon which concrete is to be placed shall be free from oil, standing or running water, ice, mud, drummy rock, coating, debris, and loose, semidetached or unsound fragments. Joints in rock shall be cleaned to a satisfactory depth, as determined by the Contracting Officer, and to firm rock on the sides. Immediately before the concrete is placed, rock surfaces shall be cleaned thoroughly by the use of air-water jets or sandblasting as specified below for Previously Placed Concrete. Rock

surfaces shall be kept continuously moist for at least 24 hours immediately prior to placing concrete thereon. All horizontal and approximately horizontal surfaces shall be covered, immediately before the concrete is placed, with a layer of mortar proportioned similar to that in the concrete mixture. Concrete shall be placed before the mortar stiffens.

3.1.1.3 Excavated Surfaces in Lieu of Side Forms

Concrete for footings may be placed directly against the rock provided the rock has been carefully trimmed, is uniform and stable, and meets the requirements of the previous sub-paragraph. The concrete shall be placed without becoming contaminated by loose material, and the outline of the concrete shall be within the specified tolerances.

3.1.2 Previously Placed Concrete

Concrete surfaces to which additional concrete is to be bonded shall be prepared for receiving the next horizontal lift by cleaning the construction joint surface with either air-water cutting, sandblasting, high-pressure water jet, or other approved method. Concrete at the side of vertical construction joints shall be prepared as approved by the Contracting Officer. Air-water cutting shall not be used on formed surfaces or surfaces congested with reinforcing steel. Regardless of the method used, the resulting surfaces shall be free from all laitance and inferior concrete so that clean surfaces of well bonded coarse aggregate are exposed and make up at least 10-percent of the surface area, distributed uniformly throughout the surface. The edges of the coarse aggregate shall not be undercut. The surface of horizontal construction joints shall be kept continuously wet for the first 12 hours during the 24-hour period prior to placing fresh concrete. The surface shall be washed completely clean as the last operation prior to placing the next lift. For two-course floors a thin coat of neat cement grout of about the consistency of thick cream shall be thoroughly scrubbed into the existing surface immediately ahead of the topping or fillplacing. The grout shall be a 1:1 mixture of portland cement and sand passing the No. 8 sieve. The topping or fill concrete shall be deposited before the grout coat has had time to stiffen.

3.1.2.1 Air-Water Cutting

Air-water cutting of a fresh concrete surface shall be performed at the proper time and only on horizontal construction joints. The air pressure used in the jet shall be 100 psi plus or minus 10 psi, and the water pressure shall be just sufficient to bring the water into effective influence of the air pressure. When approved by the Contracting Officer, a surface retarder complying with the requirements of COE CRD-C 94 may be applied to the surface of the lift in order to prolong the period of time during which air-water cutting is effective. After cutting, the surface shall be washed and rinsed as long as there is any trace of cloudiness of the wash water. Where necessary to remove accumulated laitance, coatings, stains, debris, and other foreign material, high-pressure waterjet or sandblasting shall be used as the last operation before placing the next lift.

3.1.2.2 High-Pressure Water Jet

A stream of water under a pressure of not less than 2,000 psi shall be used for cutting and cleaning. Its use shall be delayed until the concrete is sufficiently hard so that only the surface skin or mortar is removed and there is no undercutting of coarse-aggregate particles. If the waterjet is incapable of a satisfactory cleaning, the surface shall be cleaned by sandblasting.

3.1.2.3 Wet Sandblasting

Wet sandblasting shall be used after the concrete has reached sufficient strength to prevent undercutting of the coarse aggregate particles. After wet sandblasting, the surface of the concrete shall then be washed thoroughly to remove all loose materials.

3.1.2.4 Waste Disposal

The method used in disposing of waste water employed in cutting, washing, and rinsing of concrete surfaces shall be such that the waste water does not stain, discolor, or affect exposed surfaces of the structures, or damage the environment of the project area. The method of disposal shall be subject to approval.

3.1.2.5 Preparation of Previously Placed Concrete

Concrete surfaces to which other concrete is to be bonded shall be abraded in an approved manner that will expose sound aggregate uniformly without damaging the concrete. Laitance and loose particles shall be removed. Surfaces shall be thoroughly washed and shall be moist but without free water when concrete is placed.

3.1.3 Vapor Barrier

Vapor barrier shall be provided beneath the interior on-grade concrete floor slabs. The greatest widths and lengths practicable shall be used to eliminate joints wherever possible. Joints shall be lapped a minimum of 12 inches. Torn, punctured, or damaged vapor barrier material shall be removed and new vapor barrier shall be provided prior to placing concrete. For minor repairs, patches may be made using laps of at least 12 inches. Lapped joints shall be sealed and edges patched with pressure-sensitive adhesive or tape not less than 2 inches wide and compatible with the membrane. Vapor barrier shall be placed directly on underlying subgrade, base course, or capillary water barrier, unless it consists of crushed material or large granular material which could puncture the vapor barrier. In this case, the surface shall be choked with a light layer of sand, as approved, before placing the vapor barrier. Concrete placement shall be controlled so as to prevent damage to the vapor barrier.

3.1.4 Embedded Items

Before placement of concrete, care shall be taken to determine that all embedded items are firmly and securely fastened in place as indicated on the drawings, or required. Conduit and other embedded items shall be clean

and free of oil and other foreign matter such as loose coatings or rust, paint, and scale. The embedding of wood in concrete will be permitted only when specifically authorized or directed. Voids in sleeves, inserts, and anchor slots shall be filled temporarily with readily removable materials to prevent the entry of concrete into voids. Welding shall not be performed on embedded metals within 1 feet of the surface of the concrete. Tack welding shall not be performed on or to embedded items.

3.2 CONCRETE PRODUCTION

3.2.1 Batching, Mixing, and Transporting Concrete

Concrete shall be furnished from a ready-mixed concrete plant. Ready-mixed concrete shall be batched, mixed, and transported in accordance with ASTM C 94, except as otherwise specified. Truck mixers, and agitators shall comply with NRMCA TMMB-01. Ready-mix plant equipment and facilities shall be certified in accordance with NRMCA QC 3. Approved batch tickets shall be furnished for each load of ready-mixed concrete.

3.2.1.1 General

The batching plant shall be located off site close to the project. The batching, mixing and placing system shall have a capacity of at least 60 cubic yards per hour. The batching plant shall conform to the requirements of NRMCA CPMB 100 and as specified; however, rating plates attached to batch plant equipment are not required.

3.2.1.2 Batching Equipment

The batching controls shall be semiautomatic or automatic, as defined in NRMCA CPMB 100. A semiautomatic batching system shall be provided with interlocks such that the discharge device cannot be actuated until the indicated material is within the applicable tolerance. The batching system shall be equipped with accurate recorder or recorders that meet the requirements of NRMCA CPMB 100. The weight of water and admixtures shall be recorded if batched by weight. Separate bins or compartments shall be provided for each size group of aggregate and type of cementitious material, to prevent intermingling at any time. Aggregates shall be weighed either in separate weigh batchers with individual scales or, provided the smallest size is batched first, cumulatively in one weigh batcher on one scale. Aggregate shall not be weighed in the same batcher with cementitious material. If both portland cement and other cementitious material are used, they may be batched cumulatively, provided that the portland cement is batched first. Water may be measured by weight or volume. Water shall not be weighed or measured cumulatively with another ingredient. Filling and discharging valves for the water metering or batching system shall be so interlocked that the discharge valve cannot be opened before the filling valve is fully closed. Piping for water and for admixtures shall be free from leaks and shall be properly valved to prevent backflow or siphoning. Admixtures shall be furnished as a liquid of suitable concentration for easy control of dispensing. An adjustable, accurate, mechanical device for measuring and dispensing each admixture shall be provided. Each admixture dispenser shall be interlocked with the batching and discharging operation of the water so that each admixture is

separately batched and individually discharged automatically in a manner to obtain uniform distribution throughout the water as it is added to the batch in the specified mixing period. When use of truck mixers makes this requirement impractical, the admixture dispensers shall be interlocked with the sand batchers. Different admixtures shall not be combined prior to introduction in water and shall not be allowed to intermingle until in contact with the cement. Admixture dispensers shall have suitable devices to detect and indicate flow during dispensing or have a means for visual observation. The plant shall be arranged so as to facilitate the inspection of all operations at all times. Suitable facilities shall be provided for obtaining representative samples of aggregates from each bin or compartment, and for sampling and calibrating the dispensing of cementitious material, water, and admixtures. Filling ports for cementitious materials bins or silos shall be clearly marked with a permanent sign stating the contents.

3.2.1.3 Scales

The weighing equipment shall conform to the applicable requirements of CPMB Concrete Plant Standard, and of NIST HB 44, except that the accuracy shall be plus or minus 0.2 percent of scale capacity. The Contractor shall provide standard test weights and any other auxiliary equipment required for checking the operating performance of each scale or other measuring devices. The tests shall be made at the specified frequency in the presence of a Government inspector. The weighing equipment shall be arranged so that the plant operator can conveniently observe all dials or indicators.

3.2.1.4 Batching Tolerances

(A) Tolerances with Weighing Equipment

MATERIAL	PERCENT OF REQUIRED WEIGHT
Cementitious materials	0 to plus 2
Aggregate	plus or minus 2
Water	plus or minus 1
Chemical admixture	0 to plus 6

(B) Tolerances with Volumetric Equipment

For volumetric batching equipment used for water and admixtures, the following tolerances shall apply to the required volume of material being batched:

MATERIAL	PERCENT OF REQUIRED MATERIAL
Water:	plus or minus 1 percent
Chemical admixtures:	0 to plus 6 percent

3.2.1.5 Moisture Control

The plant shall be capable of ready adjustment to compensate for the varying moisture content of the aggregates and to change the weights of the materials being batched.

3.2.1.6 Concrete Mixers

Mixers shall be stationary mixers or truck mixers. Mixers shall be capable of combining the materials into a uniform mixture and of discharging this mixture without segregation. The mixers shall not be charged in excess of the capacity recommended by the manufacturer. The mixers shall be operated at the drum or mixing blade speed designated by the manufacturer. The mixers shall be maintained in satisfactory operating condition, and the mixer drums shall be kept free of hardened concrete. Should any mixer at any time produce unsatisfactory results, its use shall be promptly discontinued until it is repaired.

3.2.1.7 Stationary Mixers

Concrete plant mixers shall be drum-type mixers of tilting, nontilting, horizontal-shaft, or vertical-shaft type, or shall be pug mill type and shall be provided with an acceptable device to lock the discharge mechanism until the required mixing time has elapsed. The mixing time and uniformity shall conform to all the requirements in ASTM C 94 applicable to central-mixed concrete.

3.2.1.8 Truck Mixers

Truck mixers, the mixing of concrete therein, and concrete uniformity shall conform to the requirements of ASTM C 94. A truck mixer may be used either for complete mixing (transit-mixed) or to finish the partial mixing done in a stationary mixer (shrink-mixed). Each truck shall be equipped with two counters from which it is possible to determine the number of revolutions at mixing speed and the number of revolutions at agitating speed. Water shall not be added at the placing site unless specifically approved; and in no case shall it exceed the specified w/c. Any such water shall be injected at the base of the mixer, not at the discharge end.

3.3 LIGHTWEIGHT AGGREGATE CONCRETE

In addition to the requirements specified for normal weight concrete, lightweight aggregate concrete shall conform to the following. The batching and mixing cycle shall be as directed based on written recommendations from the aggregate supplier which the Contractor shall furnish. Unless otherwise directed, the mixer shall be charged with approximately 2/3 of the total mixing water and all of the aggregate. This shall be mixed for at least 1-1/2 minutes in a stationary mixer or 15 revolutions at mixing speed in a truck mixer. The remaining ingredients shall then be added and mixing continued as specified for normal weight concrete. Lightweight aggregate concrete shall not be vibrated to the extent that large particles of aggregate float to the surface. During finishing, lightweight aggregate concrete shall not be worked to the extent that mortar is driven down and lightweight coarse aggregate appears at the surface. Lightweight aggregate concrete to be pumped shall have a cement content of at least 564 lb. per cu. yd. A field trial run of lightweight

aggregate concrete placement and finishing shall be made in accordance with ACI 213R.

3.4 FIBER REINFORCED CONCRETE

All concrete bridge decks shall have fiber reinforcing in addition to bar reinforcing.

Fiber reinforced concrete shall conform to ASTM C 1116 and as follows, using the fibers specified in PART 2. A minimum of 2.0 pounds of fibers per cubic yard of concrete shall be used. Fibers shall be added at the batch plant. Toughness indices shall meet requirements for performance level I of ASTM C 1116. The services of a qualified technical representative shall be provided to instruct the concrete supplier in proper batching and mixing of materials to be provided.

3.5 TRANSPORTING CONCRETE TO PROJECT SITE

Concrete shall be transported to the placing site in truck mixers, or agitators,conforming to NRMCA TMMB-01. Nonagitating equipment, other than pumps, shall not be used for transporting lightweight aggregate concrete.

3.6 CONVEYING CONCRETE ON SITE

Concrete shall be conveyed from mixer or transporting unit to forms as rapidly as possible and within the time interval specified by methods which will prevent segregation or loss of ingredients using following equipment. Conveying equipment shall be cleaned before each placement.

3.6.1 Buckets

The interior hopper slope shall be not less than 58 degrees from the horizontal, the minimum dimension of the clear gate opening shall be at least 5 times the nominal maximum-size aggregate, and the area of the gate opening shall not be less than 2 square feet.The maximum dimension of the gate opening shall not be greater than twice the minimum dimension. The bucket gates shall be essentially grout tight when closed and may be manually, pneumatically, or hydraulically operated except that buckets larger than 2 cubic yardsshall not be manually operated. The design of the bucket shall provide means for positive regulation of the amount and rate of deposit of concrete in each dumping position.

3.6.2 Transfer Hoppers

Concrete may be charged into nonagitating hoppers for transfer to other conveying devices. Transfer hoppers shall be capable of receiving concrete directly from delivery vehicles and shall have conical-shaped discharge features. The transfer hopper shall be equipped with a hydraulically operated gate and with a means of external vibration to effect complete discharge. Concrete shall not be held in nonagitating transfer hoppers more than 30 minutes.

3.6.3 Trucks

Truck mixers operating at agitating speed or truck agitators used for transporting plant-mixed concrete shall conform to the requirements of ASTM C 94. Nonagitating equipment shall be used only for transporting plant-mixed concrete over a smooth road and when the hauling time is less than 15 minutes. Bodies of nonagitating equipment shall be smooth, watertight, metal containers specifically designed to transport concrete, shaped with rounded corners to minimize segregation, and equipped with gates that will permit positive control of the discharge of the concrete.

3.6.4 Chutes

When concrete can be placed directly from a truck mixer, agitator, or nonagitating equipment, the chutes normally attached to this equipment by the manufacturer may be used. A discharge deflector shall be used when required by the Contracting Officer. Separate chutes and other similar equipment will not be permitted for conveying concrete.

3.6.5 Belt Conveyors

Belt conveyors shall be designed and operated to assure a uniform flow of concrete from mixer to final place of deposit without segregation of ingredients or loss of mortar and shall be provided with positive means, such as discharge baffle or hopper , for preventing segregation of the concrete at the transfer points and the point of placing. Belt conveyors shall be constructed such that the idler spacing shall not exceed 36 inches. The belt speed shall be a minimum of 300 feet per minute and a maximum of 750 feet per minute. If concrete is to be placed through installed horizontal or sloping reinforcing bars, the conveyor shall discharge concrete into a pipe or "elephant trunk" that is long enough to extend through the reinforcing bars.

3.6.6 Concrete Pumps

Concrete may be conveyed by positive displacement pump when approved. The pumping equipment shall be piston or squeeze pressure type; pneumatic placing equipment shall not be used. The pipeline shall be rigid steel pipe or heavy-duty flexible hose. The inside diameter of the pipe shall be at least 3 times the nominal maximum-size coarse aggregate in the concrete mixture to be pumped but not less than 4 inches. Aluminum pipe shall not be used.

3.7 PLACING CONCRETE

Mixed concrete shall be discharged within 1-1/2 hours or before the mixer drum has revolved 300 revolutions, whichever comes first after the introduction of the mixing water to the cement and aggregates. When the concrete temperature exceeds 85 degrees F, the time shall be reduced to 45 minutes. Concrete shall be placed within 15 minutes after it has been discharged from the transporting unit. Concrete shall be handled from mixer or transporting unit to forms in a continuous manner until the approved unit of operation is completed. Adequate scaffolding, ramps and walkways shall be provided so that personnel and equipment are not supported by in-place reinforcement. Placing will not be permitted when the sun, heat, wind, or limitations of facilities furnished by the

Contractor prevent proper consolidation, finishing and curing. Sufficient placing capacity shall be provided so that concrete can be kept free of cold joints.

3.7.1 Depositing Concrete

Concrete shall be deposited as close as possible to its final position in the forms, and there shall be no vertical drop greater than 5 feet except where suitable equipment is provided to prevent segregation and where specifically authorized. Depositing of the concrete shall be so regulated that it will be effectively consolidated in horizontal layers not more than 12 inches thick, except that all slabs shall be placed in a single layer. Concrete to receive other construction shall be screeded to the proper level. Concrete shall be deposited continuously in one layer or in layers so that fresh concrete is deposited on in-place concrete that is still plastic. Fresh concrete shall not be deposited on concrete that has hardened sufficiently to cause formation of seams or planes of weakness within the section. Concrete that has surface dried, partially hardened, or contains foreign material shall not be used. When temporary spreaders are used in the forms, the spreaders shall be removed as their service becomes unnecessary. Concrete shall not be placed in slabs over columns and walls until concrete in columns and walls has been in-place at least two hours or until the concrete begins to lose its plasticity. Concrete for beams, girders, brackets, column capitals, haunches, and drop panels shall be placed at the same time as concrete for adjoining slabs.

3.7.2 Consolidation

Immediately after placing, each layer of concrete shall be consolidated by internal vibrators, except for slabs 4 inches thick or less. The vibrators shall at all times be adequate in effectiveness and number to properly consolidate the concrete; a spare vibrator shall be kept at the jobsite during all concrete placing operations. The vibrators shall have a frequency of not less than 10,000 vibrations per minute, an amplitude of at least 0.025 inch, and the head diameter shall be appropriate for the structural member and the concrete mixture being placed. Vibrators shall be inserted vertically at uniform spacing over the area of placement. The distance between insertions shall be approximately 1-1/2 times the radius of action of the vibrator so that the area being vibrated will overlap the adjacent just-vibrated area by a reasonable amount. The vibrator shall penetrate rapidly to the bottom of the layer and at least 6 inches into the preceding layer if there is such. Vibrator shall be held stationary until the concrete is consolidated and then vertically withdrawn slowly while operating. Form vibrators shall not be used unless specifically approved and unless forms are constructed to withstand their use. Vibrators shall not be used to move concrete within the forms. Slabs 4 inches and less in thickness shall be consolidated by properly designed vibrating screeds or other approved technique. Excessive vibration of lightweight concrete resulting in segration or flotation of coarse aggregate shall be prevented. Frequency and amplitude of vibrators shall be determined in accordance with COE CRD-C 521. Grate tampers ("jitterbugs") shall not be used.

3.7.3 Cold Weather Requirements

Special protection measures, approved by the Contracting Officer, shall be used if freezing temperatures are anticipated before the expiration of the specified curing period. The ambient temperature of the air where concrete is to be placed and the temperature of surfaces to receive concrete shall be not less than 40 degrees F. The temperature of the concrete when placed shall be not less than 50 degrees F nor more than 75 degrees F. Heating of the mixing water or aggregates will be required to regulate the concrete placing temperature. Materials entering the mixer shall be free from ice, snow, or frozen lumps. Salt, chemicals or other materials shall not be incorporated in the concrete to prevent freezing. Upon written approval, an accelerating admixture conforming to ASTM C 494, Type C or E may be used, provided it contains no calcium chloride. Calcium chloride shall not be used.

3.7.4 Hot Weather Requirements

When the ambient temperature during concrete placing is expected to exceed 85 degrees F, the concrete shall be placed and finished with procedures previously submitted and as specified herein. The concrete temperature at time of delivery to the forms shall not exceed the temperature shown in the table below when measured in accordance with ASTM C 1064. Cooling of the mixing water or aggregates or placing concrete in the cooler part of the day may be required to obtain an adequate placing temperature. A retarder may be used, as approved, to facilitate placing and finishing. Steel forms and reinforcements shall be cooled as approved prior to concrete placement when steel temperatures are greater than 120 degrees F. Conveying and placing equipment shall be cooled if necessary to maintain proper concrete-placing temperature.

Maximum Allowable Concrete Placing Temperature

Relative Humidity, Percent, During Time of Concrete Placement	Maximum Allowable Concrete Temperature Degrees
Greater than 60	90 F
40-60	85 F
Less than 40	80 F

3.7.5 Prevention of Plastic Shrinkage Cracking

During hot weather with low humidity, and particularly with appreciable wind, as well as interior placements when space heaters produce low humidity, the Contractor shall be alert to the tendency for plastic shrinkage cracks to develop and shall institute measures to prevent this. Particular care shall be taken if plastic shrinkage cracking is potentially imminent and especially if it has developed during a previous placement. Periods of high potential for plastic shrinkage cracking can be anticipated by use of Fig. 2.1.5 of ACI 305R. In addition the concrete placement shall be further protected by erecting shades and windbreaks and by applying fog sprays of water, sprinkling, ponding or wet covering. Plastic shrinkage

cracks that occur shall be filled by injection of epoxy resin as directed, after the concrete hardens. Plastic shrinkage cracks shall never be troweled over or filled with slurry.

3.7.6 Placing Concrete Underwater

Concrete shall not be placed under water without specific written approval in advance by the Contracting Officer. When approved, concrete shall be deposited in water by a tremie or concrete pump. The methods and equipment used shall be subject to approval. Concrete buckets shall not be used for underwater placement of concrete except to deliver concrete to the tremie. The tremie shall be watertight and sufficiently large to permit a free flow of concrete. The concrete shall be deposited so that it enters the mass of the previously placed concrete from within, displacing water with a minimum disturbance to the surface of the concrete. The discharge end of the pump line or tremie shaft shall be kept continuously submerged in the concrete. The underwater seal at start of placing shall not produce undue turbulence in the water. The tremie shaft shall be kept full of concrete to a point well above the water surface. Placement shall proceed without interruption until the concrete has been brought to the required height. The tremie shall not be moved horizontally during a placing operation, and a sufficient number of tremies shall be provided so that the maximum horizontal flow of concrete will be limited to 15 feet. Concrete shall not be deposited in running water or in water with a temperature below 35 degrees F.

3.7.7 Placing Concrete in Congested Areas

Special care shall be used to ensure complete filling of the forms, elimination of all voids, and complete consolidation of the concrete when placing concrete in areas congested with reinforcing bars, embedded items, waterstops and other tight spacing. An appropriate concrete mixture shall be used, and the nominal maximum size of aggregate (NMSA) shall meet the specified criteria when evaluated for the congested area. Vibrators with heads of a size appropriate for the clearances available shall be used, and the consolidation operation shall be closely supervised to ensure complete and thorough consolidation at all points. Where necessary, splices of reinforcing bars shall be alternated to reduce congestion. Where two mats of closely spaced reinforcing are required, the bars in each mat shall be placed in matching alignment to reduce congestion. Reinforcing bars may be temporarily crowded to one side during concrete placement provided they are returned to exact required location before concrete placement and consolidation are completed.

3.7.8 Placing Flowable Concrete

If a plasticizing admixture conforming to ASTM C 1017 is used or if a Type F or G high range water reducing admixture is permitted to increase the slump, the concrete shall meet all requirements of paragraph GENERAL REQUIREMENTS in PART 1. Extreme care shall be used in conveying and placing the concrete to avoid segregation. Consolidation and finishing shall meet all requirements of paragraphs Placing Concrete, Finishing Formed Surfaces, and Finishing Unformed Surfaces. No relaxation of requirements to accommodate flowable concrete will be permitted.

3.8 JOINTS

Joints shall be located and constructed as indicated or approved in advance with the reinforcement shop Drawings (see Section 03200). Joints not indicated on the drawings shall be located and constructed to minimize the impact on the strength of the structure. In general, such joints shall be located near the middle of the spans of supported slabs, beams, and girders unless a beam intersects a girder at this point, in which case the joint in the girder shall be offset a distance equal to twice the width of the beam. Joints in walls and columns shall be at the underside of floors, slabs, beams, or girders and at the tops of footings or floor slabs, unless otherwise approved. Joints shall be perpendicular to the main reinforcement. All reinforcement shall be continued across joints; except that reinforcement or other fixed metal items shall not be continuous through expansion joints, or through construction or contraction joints in slabs on grade. Reinforcement shall be 2 inches clear from each joint. Except where otherwise indicated, construction joints between interior slabs on grade and vertical surfaces shall consist of 30 pound asphalt-saturated felt, extending for the full depth of the slab. The perimeters of the slabs shall be free of fins, rough edges, spalling, or other unsightly appearance. Reservoir for sealant for construction and contraction joints in slabs shall be formed to the dimensions shown on the drawings by removing snap-out joint-forming inserts, or by sawing to widen the top portion of sawed joints. Joints to be sealed shall be cleaned and sealed as indicated and in accordance with Section 07900 JOINT SEALING.

3.8.1 Construction Joints

For concrete other than slabs on grade, construction joints shall be located so that the unit of operation does not exceed 50 feet, or 90 feet on steel deck; exceed only where intermediate control joints are provided. Concrete shall be placed continuously so that each unit is monolithic in construction. Fresh concrete shall not be placed against adjacent hardened concrete until it is at least 24 hours old. Construction joints shall be located as indicated or approved. Where concrete work is interrupted by weather, end of work shift or other similar type of delay, location and type of construction joint shall be subject to approval of the Contracting Officer. Unless otherwise indicated and except for slabs on grade, reinforcing steel shall extend through construction joints. Construction joints in slabs on grade shall be keyed or doweled as shown. Concrete columns, walls, or piers shall be in place at least 2 hours, or until the concrete begins to lose its plasticity, before placing concrete for beams, girders, or slabs thereon. In walls having door or window openings, lifts shall terminate at the top and bottom of the opening. Other lifts shall terminate at such levels as to conform to structural requirements or architectural details. Where horizontal construction joints in walls or columns are required, a strip of 1 inch square-edge lumber, bevelled and oiled to facilitate removal, shall be tacked to the inside of the forms at the construction joint. Concrete shall be placed to a point 1 inch above the underside of the strip. The strip shall be removed 1 hour after the concrete has been placed, and any irregularities in the joint line shall be leveled off with a wood float, and all laitance shall be removed. Prior to placing additional concrete, horizontal construction joints shall be

prepared as specified in paragraph Previously Placed Concrete.

3.8.2 Contraction Joints in Slabs on Grade

Contraction joints shall be located and detailed as shown on the drawings. Contraction Joints shall be produced by forming a weakened plane in the concrete slab by use of rigid inserts impressed in the concrete during placing operations or sawing a continuous slot with a concrete saw. Regardless of method used to produce the weakened plane, it shall be 1/4 the depth of the slab thickness and between 1/8 and 3/16 inch wide. For saw-cut joints, cutting shall be timed properly with the set of the concrete. Cutting shall be started as soon as the concrete has hardened sufficiently to prevent ravelling of the edges of the saw cut. Cutting shall be completed before shrinkage stresses become sufficient to produce cracking. Reservoir for joint sealant shall be formed as previously specified.

3.8.3 Expansion Joints

Installation of expansion joints and sealing of these joints shall conform to the requirements of Section 03150 EXPANSION JOINTS, CONTRACTION JOINTS, AND WATERSTOPS and Section 07900 JOINT SEALING.

3.8.4 Waterstops

Waterstops shall be installed in conformance with the locations and details shown on the drawings using materials and procedures specified in Section 03150 EXPANSION JOINTS, CONTRACTION JOINTS, AND WATERSTOPS.

3.8.5 Dowels and Tie Bars

Dowels and tie bars shall be installed at the locations shown on the drawings and to the details shown, using materials and procedures specified in Section 03200 CONCRETE REINFORCEMENT and herein. Conventional smooth "paving" dowels shall be installed in slabs using approved methods to hold the dowel in place during concreting within a maximum alignment tolerance of 1/8 inch in 12 inches. "Structural" type deformed bar dowels, or tie bars, shall be installed to meet the specified tolerances. Care shall be taken during placing adjacent to and around dowels and tie bars to ensure there is no displacement of the dowel or tie bar and that the concrete completely embeds the dowel or tie bar and is thoroughly consolidated.

3.9 FINISHING FORMED SURFACES

Forms, form materials, and form construction are specified in Section 03100 STRUCTURAL CONCRETE FORMWORK. Finishing of formed surfaces shall be as specified herein. Unless another type of architectural or special finish is specified, surfaces shall be left with the texture imparted by the forms except that defective surfaces shall be repaired. Except for major defects, as defined hereinafter, surface defects shall be repaired as specified herein within 24 hours after forms are removed. Repairs of the so-called "plaster-type" will not be permitted in any location. Tolerances of formed surfaces shall conform to the requirements of ACI 117/117R. These tolerances apply to the finished concrete surface, not to the forms

themselves; forms shall be set true to line and grade. Form tie holes requiring repair and other defects whose depth is at least as great as their surface diameter shall be repaired as specified in paragraph Damp-Pack Mortar Repair. Defects whose surface diameter is greater than their depth shall be repaired as specified in paragraph Repair of Major Defects. Repairs shall be finished flush with adjacent surfaces and with the same surface texture. The cement used for all repairs shall be a blend of job cement with white cement proportioned so that the final color after curing and aging will be the same as the adjacent concrete. Concrete with excessive honeycomb, or other defects which affect the strength of the member, will be rejected. Repairs shall be demonstrated to be acceptable and free from cracks or loose or drummy areas at the completion of the contract. Repairs not meeting these requirements will be rejected and shall be replaced.

3.9.1 Class A Finish

Class A finish is required at all exposed to view exterior concrete and at all exposed to view interior concrete. Exposed to view exterior concrete shall include exposed to view concrete foundation walls, bridge abutments under bridge decks, retaining walls, stair risers and the like. Fins, ravelings, and loose material shall be removed, all surface defects over 1/2 inch in diameter or more than 1/2 inch deep, shall be repaired and, except as otherwise indicated or as specified in Section 03100 STRUCTURAL CONCRETE FORMWORK, holes left by removal of form ties shall be reamed and filled. Defects more than 1/2 inch in diameter shall be cut back to sound concrete, but in all cases at least 1 inch deep. The Contractor shall prepare a sample panel for approval (as specified in PART 1) before commencing repair, showing that the surface texture and color match will be attained. Metal tools shall not be used to finish repairs in Class A surfaces.

3.9.2 Class D Finish

Class D finish is required at all locations not indicated above to receive a Class A Finish. Fins, ravelings, and loose material shall be removed, and, except as otherwise indicated or as specified in Section 03100 STRUCTURAL CONCRETE FORMWORK, holes left by removal of form ties shall be reamed and filled. Honeycomb and other defects more than 1/2 inch deep or more than 2 inches in diameter shall be repaired. Defects more than 2 inches in diameter shall be cut back to sound concrete, but in all cases at least 1 inch deep.

3.9.3 Special Finishes

3.9.3.1 Smooth Finish

After other concrete construction is complete in each overall separate contiguous area of the structure, smooth finish shall be applied to all exposed to view concrete specified herein to receive a Class A Finish. A mortar mix consisting of one part portland cement and two parts well-graded sand passing a No. 30 sieve, with water added to give the consistency of thick paint, shall be used. Where the finished surface will not receive other applied surface, white cement shall be used to replace part of the

job cement to produce an approved color, which shall be uniform throughout the surfaces of the structure. After the surface has been thoroughly wetted and allowed to approach surface dryness, the mortar shall be vigorously applied to the area by clean burlap pads or by cork or wood-floating, to completely fill all surface voids. Excess grout shall be scraped off with a trowel. As soon as it can be accomplished without pulling the mortar from the voids, the area shall be rubbed with burlap pads having on their surface the same sand-cement mix specified above but without any mixing water, until all of the visible grout film is removed. The burlap pads used for this operation shall be stretched tightly around a board to prevent dishing the mortar in the voids. The finish of any area shall be completed in the same day, and the limits of a finished area shall be made at natural breaks in the surface. The surface shall be continuously moist cured for 48 hours commencing immediately after finishing operations in each area. The temperature of the air adjacent to the surface shall be not less than 50 degrees F for 24 hours prior to, and 48 hours after, the application. In hot, dry weather the smooth finish shall be applied in shaded areas or at night, and shall never be applied when there is significant hot, dry wind.

3.9.3.2 Sandblast Finish

The inner concrete surfaces of all swimming pool walls and bottom slab surfaces indicated to recieve a plaster finish shall be heavily blasted (approximately 1/4 inch amplitude/depth) at an approved age with approved wet sandblasting procedures to obtain a heavy finish which will match the descriptive photographs in ACI 303R. The finish shall be similar to and shall closely match the finish on the approved preconstruction test panel fabricated by the Contractor.

3.10 REPAIRS

3.10.1 Damp-Pack Mortar Repair

Form tie holes requiring repair and other defects whose depth is at least as great as their surface diameter but not over 4 inchesshall be repaired by the damp-pack mortar method. Form tie holes shall be reamed and other similar defects shall be cut out to sound concrete. The void shall then be thoroughly cleaned, thoroughly wetted, brush-coated with a thin coat of neat cement grout and filled with mortar. Mortar shall be a stiff mix of 1 part portland cement to 2 parts fine aggregate passing the No. 16 mesh sieve, and minimum amount of water. Only sufficient water shall be used to produce a mortar which, when used, will stick together on being molded into a ball by a slight pressure of the hands and will not exude water but will leave the hands damp. Mortar shall be mixed and allowed to stand for 30 to 45 minutes before use with remixing performed immediately prior to use. Mortar shall be thoroughly tamped in place in thin layers using a hammer and hardwood block. Holes passing entirely through walls shall be completely filled from the inside face by forcing mortar through to the outside face. All holes shall be packed full. Damp-pack repairs shall be moist cured for at least 48 hours.

3.10.2 Repair of Major Defects

Major defects will be considered to be those more than 1/2 inch deep or, for Class A finishes, more than 1/2 inch in diameter and, for Class D finishes, more than 2 inches in diameter. Also included are any defects of any kind whose depth is over 4 inches or whose surface diameter is greater than their depth. Major defects shall be repaired as specified below.

3.10.2.1 Surface Application of Mortar Repair

Defective concrete shall be removed, and removal shall extend into completely sound concrete. Approved equipment and procedures which will not cause cracking or microcracking of the sound concrete shall be used. If reinforcement is encountered, concrete shall be removed so as to expose the reinforcement for at least 2 inches on all sides. All such defective areas greater than 12 square inchesshall be outlined by saw cuts at least 1 inch deep. Defective areas less than 12 square inches shall be outlined by a 1 inch deep cut with a core drill in lieu of sawing. All saw cuts shall be straight lines in a rectangular pattern in line with the formwork panels. After concrete removal, the surface shall be thoroughly cleaned by high pressure washing to remove all loose material. Surfaces shall be kept continually saturated for the first 12 of the 24 hours immediately before placing mortar and shall be damp but not wet at the time of commencing mortar placement. The Contractor, at his option, may use either hand-placed mortar or mortar placed with a mortar gun. If hand-placed mortar is used, the edges of the cut shall be perpendicular to the surface of the concrete. The prepared area shall be brush-coated with a thin coat of neat cement grout. The repair shall then be made using a stiff mortar, preshrunk by allowing the mixed mortar to stand for 30 to 45 minutes and then remixed, thoroughly tamped into place in thin layers. If hand-placed mortar is used, the Contractor shall test each repair area for drumminess by firm tapping with a hammer and shall inspect for cracks, both in the presence of the Contracting Officer's representative, immediately before completion of the contract, and shall replace any showing drumminess or cracking. If mortar placed with a mortar gun is used, the gun shall be a small compressed air-operated gun to which the mortar is slowly hand fed and which applies the mortar to the surface as a high-pressure stream, as approved. Repairs made using shotcrete equipment will not be accepted. The mortar used shall be the same mortar as specified for damp-pack mortar repair. If gun-placed mortar is used, the edges of the cut shall be beveled toward the center at a slope of 1:1. All surface applied mortar repairs shall be continuously moist cured for at least 7 days. Moist curing shall consist of several layers of saturated burlap applied to the surface immediately after placement is complete and covered with polyethylene sheeting, all held closely in place by a sheet of plywood or similar material rigidly braced against it. Burlap shall be kept continually wet.

3.10.2.2 Repair of Deep and Large Defects

Deep and large defects will be those that are more than 6 inches deep and also have an average diameter at the surface more than 18 inches or that are otherwise so identified by the Contracting Officer. Such defects shall be repaired as specified herein or directed, except that defects which affect the strength of the structure shall not be repaired and that portion

of the structure shall be completely removed and replaced. Deep and large defects shall be repaired by procedures approved in advance including forming and placing special concrete using applied pressure during hardening. Preparation of the repair area shall be as specified for surface application of mortar. In addition, the top edge (surface) of the repair area shall be sloped at approximately 20 degrees from the horizontal, upward toward the side from which concrete will be placed. The special concrete shall be a concrete mixture with low water content and low slump, and shall be allowed to age 30 to 60 minutes before use. Concrete containing a specified expanding admixture may be used in lieu of the above mixture; the paste portion of such concrete mixture shall be designed to have an expansion between 2.0 and 4.0 percent when tested in accordance with ASTM C 940. A full width "chimney" shall be provided at the top of the form on the placing side to ensure filling to the top of the opening. A pressure cap shall be used on the concrete in the chimney with simultaneous tightening and revibrating the form during hardening to ensure a tight fit for the repair. The form shall be removed after 24 hours and immediately the chimney shall be carefully chipped away to avoid breaking concrete out of the repair; the surface of the repair concrete shall be dressed as required.

3.10.3 Resinous and Latex Material Repair

In lieu of the portland cement bonding coats specified above, an epoxy resin or a latex bonding agent, if approved may be used. Follow Manufacturer's instructions.

3.11 FINISHING UNFORMED SURFACES

The finish of all unformed surfaces shall meet the requirements of paragraph Tolerances in PART 1, when tested as specified herein.

3.11.1 General

The ambient temperature of spaces adjacent to unformed surfaces being finished and of the base on which concrete will be placed shall be not less than 50 degrees F. In hot weather all requirements of paragraphs Hot Weather Requirements and Prevention of Plastic Shrinkage Cracking shall be met. Unformed surfaces that are not to be covered by additional concrete or backfill shall have a float finish, with additional finishing as specified below, and shall be true to the elevation shown on the drawings. Surfaces to receive additional concrete or backfill shall be brought to the elevation shown on the drawings, properly consolidated, and left true and regular. Unless otherwise shown on the drawings, exterior surfaces shall be sloped for drainage, as directed. Where drains are provided, interior floors shall be evenly sloped to the drains. Joints shall be carefully made with a jointing or edging tool. The finished surfaces shall be protected from stains or abrasions. Grate tampers or "jitterbugs" shall not be used for any surfaces. The dusting of surfaces with dry cement or other materials or the addition of any water during finishing shall not be permitted. If bleedwater is present prior to finishing, the excess water shall be carefully dragged off or removed by absorption with porous materials such as burlap. During finishing operations, extreme care shall be taken to prevent over finishing or working water into the surface; this

can cause "crazing" (surface shrinkage cracks which appear after hardening) of the surface. Any slabs with surfaces which exhibit significant crazing shall be removed and replaced. During finishing operations, surfaces shall be checked with a 10 foot straightedge, applied in both directions at regular intervals while the concrete is still plastic, to detect high or low areas.

3.11.2 Rough Slab Finish

As a first finishing operation for unformed surfaces and as final finish for slabs to receive masonry mortar setting beds, the surface shall receive a rough slab finish prepared as follows. The concrete shall be uniformly placed across the slab area, consolidated as previously specified, and then screeded with straightedge strikeoffs immediately after consolidation to bring the surface to the required finish level with no coarse aggregate visible. Side forms and screed rails shall be provided, rigidly supported, and set to exact line and grade. Allowable tolerances for finished surfaces apply only to the hardened concrete, not to forms or screed rails. Forms and screed rails shall be set true to line and grade. "Wet screeds" shall not be used.

3.11.3 Floated Finish

Slabs and surfaces not to receive masonry mortar setting beds shall next be given a wood float finish. Areas indicated to receive ceramic tile finishes shall receive a float finish. The screeding shall be followed immediately by darbying or bull floating before bleeding water is present, to bring the surface to a true, even plane. Then, after the concrete has stiffened so that it will withstand a man's weight without imprint of more than 1/4 inch and the water sheen has disappeared, it shall be floated to a true and even plane free of ridges. Floating shall be performed by use of suitable hand floats or power driven equipment. Sufficient pressure shall be used on the floats to bring a film of moisture to the surface. Hand floats shall be made of wood, magnesium, or aluminum. Lightweight concrete or concrete that exhibits stickiness shall be floated with a magnesium float. Care shall be taken to prevent over-finishing or incorporating water into the surface.

3.11.4 Troweled Finish

All unformed and slab areas, except areas to receive ceramic tile finishes, and areas to receive masonry mortar setting beds shall be given a trowel finish. After floating is complete and after the surface moisture has disappeared, unformed surfaces shall be steel-troweled to a smooth, even, dense finish, free from blemishes including trowel marks. In lieu of hand finishing, an approved power finishing machine may be used in accordance with the directions of the machine manufacturer. Additional trowelings shall be performed, either by hand or machine until the surface has been troweled 2 times, with waiting period between each. Care shall be taken to prevent blistering and if such occurs, troweling shall immediately be stopped and operations and surfaces corrected. A final hard steel troweling shall be done by hand, with the trowel tipped, and using hard pressure, when the surface is at a point that the trowel will produce a ringing sound. The finished surface shall be thoroughly consolidated and

shall be essentially free of trowel marks and be uniform in texture and appearance. The concrete mixture used for troweled finished areas shall be adjusted, if necessary, in order to provide sufficient fines (cementitious material and fine sand) to finish properly.

3.11.5 Non-Slip Finish

Non-slip floors shall be constructed in accordance with the following subparagraphs.

3.11.5.1 Broomed

Bridge decks and exterior stair treads shall be given a broomed finish. After floating, the surface shall be lightly steel troweled, and then carefully scored by pulling a coarse fiber push-type broom across the surface. Brooming shall be transverse to traffic or at right angles to the slope of the slab. After the end of the curing period, the surface shall be vigorously broomed with a coarse fiber broom to remove all loose or semi-detached particles.

3.12 FLOOR HARDENER

Areas as indicated on the drawings shall be treated with floor hardener. Floor hardener shall be applied after the concrete has been cured and then air dried for 28 days. Three coats shall be applied, each the day after the preceding coat was applied. For the first application, one pound of the silocofluoride shall be dissolved in one gallon of water. For subsequent applications, the solution shall be two pounds of silicofluoride to each gallon of water. Floor should be mopped with clear water shortly after the preceding application has dried to remove encrusted salts. Proprietary hardeners shall be applied in accordance with the manufacturer's instructions. During application, area should be well ventilated. Precautions shall be taken when applying silicofluorides due to the toxicity of the salts. Any compound that contacts glass or aluminum should be immediately removed with clear water.

3.13 Pits and Trenches

Pits and trenches shall be constructed as indicated on the drawings. Bottoms and walls shall be placed monolithically or waterstops and keys, shall be provided as approved.

3.14 CURING AND PROTECTION

3.14.1 General

Concrete shall be cured by an approved method for the period of time given below:

Concrete with Type III cement	3 days
All other concrete	7 days

Immediately after placement, concrete shall be protected from premature drying, extremes in temperatures, rapid temperature change, mechanical

injury and damage from rain and flowing water for the duration of the curing period. Air and forms in contact with concrete shall be maintained at a temperature above 50 degrees F for the first 3 days and at a temperature above 32 degrees F for the remainder of the specified curing period. Exhaust fumes from combustion heating units shall be vented to the outside of the enclosure, and heaters and ducts shall be placed and directed so as not to cause areas of overheating and drying of concrete surfaces or to create fire hazards. Materials and equipment needed for adequate curing and protection shall be available and at the site prior to placing concrete. No fire or excessive heat, including welding, shall be permitted near or in direct contact with the concrete at any time. Except as otherwise permitted by paragraph Membrane Forming Curing Compounds, moist curing shall be provided for pool construction (sides and bottoms), pool decks, pedestrian bridge decks, loading dock floor, and for any areas to receive floor hardener, any paint, terrazzo, or other applied coating, or to which other concrete is to be bonded. Except for plastic coated burlap, impervious sheeting alone shall not be used for curing.

3.14.2 Moist Curing

Concrete to be moist-cured shall be maintained continuously wet for the entire curing period, commencing immediately after finishing. If water or curing materials used stain or discolor concrete surfaces which are to be permanently exposed, the concrete surfaces shall be cleaned as approved. When wooden forms are left in place during curing, they shall be kept wet at all times. If steel forms are used in hot weather, nonsupporting vertical forms shall be broken loose from the concrete soon after the concrete hardens and curing water continually applied in this void. If the forms are removed before the end of the curing period, curing shall be carried out as on unformed surfaces, using suitable materials. Surfaces shall be cured by ponding, by continuous sprinkling, by continuously saturated burlap or cotton mats, or by continuously saturated plastic coated burlap. Burlap and mats shall be clean and free from any contamination and shall be completely saturated before being placed on the concrete. The Contractor shall have an approved work system to ensure that moist curing is continuous 24 hours per day.

3.14.3 Membrane Forming Curing Compounds

Except as otherwise called for on the Drawings, herein, or elsewhere in the Specifications, concrete may be cured with a nonpigmented membrane curing compound containing a fugitive dye in lieu of moist curing. Membrane curing shall not be used on surfaces that are to receive any subsequent treatment depending on adhesion or bonding to the concrete, including surfaces to which a smooth finish is to be applied or plaster, or other concrete to be bonded. However, a styrene acrylate or chlorinated rubber compound meeting ASTM C 309, Class B requirements, may be used for surfaces which are to be painted or are to receive bituminous roofing or waterproofing, or floors that are to receive adhesive applications of resilient flooring. The curing compound selected shall be compatible with any subsequent paint, roofing, waterproofing or flooring specified. Membrane curing compound shall not be used on surfaces that are maintained at curing temperatures with free steam. Curing compound shall be applied to formed surfaces immediately after the forms are removed and prior to any

patching or other surface treatment except the cleaning of loose sand, mortar, and debris from the surface. All surfaces shall be thoroughly moistened with water. Curing compound shall be applied to slab surfaces as soon as the bleeding water has disappeared, with the tops of joints being temporarily sealed to prevent entry of the compound and to prevent moisture loss during the curing period. The curing compound shall be applied in a two-coat continuous operation by approved motorized power-spraying equipment operating at a minimum pressure of 75 psi, at a uniform coverage of not more than 400 square feet per gallon for each coat, and the second coat shall be applied perpendicular to the first coat. Concrete surfaces which have been subjected to rainfall within 3 hours after curing compound has been applied shall be resprayed by the method and at the coverage specified. Surfaces on which clear compound is used shall be shaded from direct rays of the sun for the first 3 days. Surfaces coated with curing compound shall be kept free of foot and vehicular traffic, and from other sources of abrasion and contamination during the curing period.

3.14.4 Impervious Sheeting

Except as otherwise called for on the Drawings, herein, or elsewhere in the Specifications, concrete surfaces may be cured using impervious sheets. However, except for plastic coated burlap, impervious sheeting alone shall not be used for curing. Impervious-sheet curing shall only be used on horizontal or nearly horizontal surfaces. Surfaces shall be thoroughly wetted and be completely covered with the sheeting. Sheeting shall be at least 18 inches wider than the concrete surface to be covered. Covering shall be laid with light-colored side up. Covering shall be lapped not less than 12 inches and securely weighted down or shall be lapped not less than 4 inches and taped to form a continuous cover with completely closed joints. The sheet shall be weighted to prevent displacement so that it remains in contact with the concrete during the specified length of curing. Coverings shall be folded down over exposed edges of slabs and secured by approved means. Sheets shall be immediately repaired or replaced if tears or holes appear during the curing period.

3.14.5 Ponding or Immersion

Concrete shall be continually immersed throughout the curing period. Water shall not be more than 20 degrees F different from the temperature of the concrete.

3.14.6 Cold Weather Curing and Protection

When the daily ambient low temperature is less than 35 degrees F the temperature of the concrete shall be maintained above 40 degrees F for the first seven days after placing. During the period of protection removal, the air temperature adjacent to the concrete surfaces shall be controlled so that concrete near the surface will not be subjected to a temperature differential of more than 25 degrees F as determined by suitable temperature measuring devices furnished by the Government, as required, and installed adjacent to the concrete surface and 2 inches inside the surface of the concrete. The installation of the thermometers shall be made by the Contractor as directed.

3.15 SETTING BASE PLATES AND BEARING PLATES

After being properly positioned, column base plates, bearing plates for beams and similar structural members, and machinery and equipment base plates shall be set to the proper line and elevation with damp-pack bedding mortar, except where nonshrink grout is required. The thickness of the mortar or grout shall be approximately 1/24 the width of the plate, but as detailed and not less than 3/4 inch. Concrete and metal surfaces in contact with grout shall be clean and free of oil and grease, and concrete surfaces in contact with grout shall be damp and free of laitance when grout is placed. Nonshrink grout shall be used where required.

3.15.1 Damp-Pack Bedding Mortar

Damp-pack bedding mortar shall consist of 1 part cement and 2-1/2 parts fine aggregate having water content such that a mass of mortar tightly squeezed in the hand will retain its shape but will crumble when disturbed. The space between the top of the concrete and bottom of the bearing plate or base shall be packed with the bedding mortar by tamping or ramming with a bar or rod until it is completely filled.

3.15.2 Nonshrink Grout

Nonshrink grout shall be a ready-mixed material requiring only the addition of water. Water content shall be the minimum that will provide a flowable mixture and completely fill the space to be grouted without segregation, bleeding, or reduction of strength.

Provide not less than 3/4 inch thickness at all column base plates and bearing plates unless a greater thickness is required. Thickness shall extend full dimensions of the plate and taper outward from the plate surface at a 1 to 1 slope to the supporting/bearing surface.

3.15.2.1 Mixing and Placing of Nonshrink Grout

Mixing and placing shall be in conformance with the material manufacturer's instructions and as specified therein. Ingredients shall be thoroughly dry-mixed before adding water. After adding water, the batch shall be mixed for 3 minutes. Batches shall be of size to allow continuous placement of freshly mixed grout. Grout not used within 30 minutes after mixing shall be discarded. The space between the top of the concrete or machinery-bearing surface and the plate shall be filled solid with the grout. Forms shall be of wood or other equally suitable material for completely retaining the grout on all sides and on top and shall be removed after the grout has set. The placed grout shall be carefully worked by rodding or other means to eliminate voids; however, overworking and breakdown of the initial set shall be avoided. Grout shall not be retempered or subjected to vibration from any source. Where clearances are unusually small, placement shall be under pressure with a grout pump. Temperature of the grout, and of surfaces receiving the grout, shall be maintained at 65 to 85 degrees F until after setting.

3.15.2.2 Treatment of Exposed Surfaces

For metal-oxidizing nonshrink grout, exposed surfaces shall be cut back 1 inch and immediately covered with a parge coat of mortar consisting of 1 part portland cement and 2-1/2 parts fine aggregate by weight, with sufficient water to make a plastic mixture. The parge coat shall have a smooth finish. For other mortars or grouts, exposed surfaces shall have a smooth-dense finish and be left untreated. Curing shall comply with paragraph CURING AND PROTECTION.

3.16 TESTING AND INSPECTION FOR CONTRACTOR QUALITY CONTROL

The Contractor shall perform the inspection and tests described below and, based upon the results of these inspections and tests, shall take the action required and shall submit specified reports. When, in the opinion of the Contracting Officer, the concreting operation is out of control, concrete placement shall cease and the operation shall be corrected. The laboratory performing the tests shall be onsite and shall conform with ASTM C 1077. Materials may be subjected to check testing by the Government from samples obtained at the manufacturer, at transfer points, or at the project site. The Government will inspect the laboratory, equipment, and test procedures prior to start of concreting operations and at least once every 8 months thereafter for conformance with ASTM C 1077.

3.16.1 Grading and Corrective Action

3.16.1.1 Fine Aggregate

At least once during each shift when the concrete plant is operating, there shall be one sieve analysis and fineness modulus determination in accordance with ASTM C 136 and COE CRD-C 104 for the fine aggregate or for each fine aggregate if it is batched in more than one size or classification. The location at which samples are taken may be selected by the Contractor as the most advantageous for control. However, the Contractor is responsible for delivering fine aggregate to the mixer within specification limits. When the amount passing on any sieve is outside the specification limits, the fine aggregate shall be immediately resampled and retested. If there is another failure on any sieve, the fact shall immediately reported to the Contracting Officer, concreting shall be stopped, and immediate steps taken to correct the grading.

3.16.1.2 Coarse Aggregate

At least once during each shift in which the concrete plant is operating, there shall be a sieve analysis in accordance with ASTM C 136 for each size of coarse aggregate. The location at which samples are taken may be selected by the Contractor as the most advantageous for production control. However, the Contractor shall be responsible for delivering the aggregate to the mixer within specification limits. A test record of samples of aggregate taken at the same locations shall show the results of the current test as well as the average results of the five most recent tests including the current test. The Contractor may adopt limits for control coarser than the specification limits for samples taken other than as delivered to the mixer to allow for degradation during handling. When the amount passing any sieve is outside the specification limits, the coarse aggregate shall be immediately resampled and retested. If the second sample fails on any

sieve, that fact shall be reported to the Contracting Officer. Where two consecutive averages of 5 tests are outside specification limits, the operation shall be considered out of control and shall be reported to the Contracting Officer. Concreting shall be stopped and immediate steps shall be taken to correct the grading.

3.16.2 Quality of Aggregates

Thirty days prior to the start of concrete placement, the Contractor shall perform all tests for aggregate quality required by ASTM C 33 and ASTM C 330. In addition, after the start of concrete placement, the Contractor shall perform tests for aggregate quality at least every three months, and when the source of aggregate or aggregate quality changes. Samples tested after the start of concrete placement shall be taken immediately prior to entering the concrete mixer.

3.16.3 Scales, Batching and Recording

The accuracy of the scales shall be checked by test weights prior to start of concrete operations and at least once every three months. Such tests shall also be made as directed whenever there are variations in properties of the fresh concrete that could result from batching errors. Once a week the accuracy of each batching and recording device shall be checked during a weighing operation by noting and recording the required weight, recorded weight, and the actual weight batched. At the same time, the Contractor shall test and ensure that the devices for dispensing admixtures are operating properly and accurately. When either the weighing accuracy or batching accuracy does not comply with specification requirements, the plant shall not be operated until necessary adjustments or repairs have been made. Discrepancies in recording accuracies shall be corrected immediately.

3.16.4 Batch-Plant Control

The measurement of concrete materials including cementitious materials, each size of aggregate, water, and admixtures shall be continuously controlled. The aggregate weights and amount of added water shall be adjusted as necessary to compensate for free moisture in the aggregates. The amount of air-entraining agent shall be adjusted to control air content within specified limits. A report shall be prepared indicating type and source of cement used, type and source of pozzolan or slag used, amount and source of admixtures used, aggregate source, the required aggregate and water weights per cubic yard, amount of water as free moisture in each size of aggregate, and the batch aggregate and water weights per cubic yard for each class of concrete batched during each day's plant operation.

3.16.5 Concrete Mixture

a. Air Content Testing. Air content tests shall be made when test specimens are fabricated. In addition, at least two tests for air content shall be made on randomly selected batches of each separate concrete mixture produced during each 8-hour period of concrete production. Additional tests shall be made when excessive variation in workability is reported by the placing

foreman or Government inspector. Tests shall be made in accordance with ASTM C 231 for normal weight concrete and ASTM C 173 for lightweight concrete. Test results shall be plotted on control charts which shall at all times be readily available to the Government and shall be submitted weekly. Copies of the current control charts shall be kept in the field by testing crews and results plotted as tests are made. When a single test result reaches either the upper or lower action limit, a second test shall immediately be made. The results of the two tests shall be averaged and this average used as the air content of the batch to plot on both the air content and the control chart for range, and for determining need for any remedial action. The result of each test, or average as noted in the previous sentence, shall be plotted on a separate control chart for each mixture on which an "average line" is set at the midpoint of the specified air content range from paragraph Air Entrainment. An upper warning limit and a lower warning limit line shall be set 1.0 percentage point above and below the average line, respectively. An upper action limit and a lower action limit line shall be set 1.5 percentage points above and below the average line, respectively. The range between each two consecutive tests shall be plotted on a secondary control chart for range where an upper warning limit is set at 2.0 percentage points and an upper action limit is set at 3.0 percentage points. Samples for air content may be taken at the mixer, however, the Contractor is responsible for delivering the concrete to the placement site at the stipulated air content. If the Contractor's materials or transportation methods cause air content loss between the mixer and the placement, correlation samples shall be taken at the placement site as required by the Contracting Officer, and the air content at the mixer controlled as directed.

b. Air Content Corrective Action. Whenever points on the control chart for percent air reach either warning limit, an adjustment shall immediately be made in the amount of air-entraining admixture batched. As soon as practical after each adjustment, another test shall be made to verify the result of the adjustment. Whenever a point on the secondary control chart for range reaches the warning limit, the admixture dispenser shall be recalibrated to ensure that it is operating accurately and with good reproducibility. Whenever a point on either control chart reaches an action limit line, the air content shall be considered out of control and the concreting operation shall immediately be halted until the air content is under control. Additional air content tests shall be made when concreting is restarted.

c. Slump Testing. In addition to slump tests which shall be made when test specimens are fabricated, at least four slump tests shall be made on randomly selected batches in accordance with ASTM C 143 for each separate concrete mixture produced during each 8-hour or less period of concrete production each day. Also, additional tests shall be made when excessive variation in workability is reported by the placing foreman or Government inspector. Test results shall be plotted on control charts which

shall at all times be readily available to the Government and shall be submitted weekly. Copies of the current control charts shall be kept in the field by testing crews and results plotted as tests are made. When a single slump test reaches or goes beyond either the upper or lower action limit, a second test shall immediately be made. The results of the two tests shall be averaged and this average used as the slump of the batch to plot on both the control charts for slump and the chart for range, and for determining need for any remedial action. Limits shall be set on separate control charts for slump for each type of mixture. The upper warning limit shall be set at 1/2 inch below the maximum allowable slump specified in paragraph Slump in PART 1 for each type of concrete and an upper action limit line and lower action limit line shall be set at the maximum and minimum allowable slumps, respectively, as specified in the same paragraph. The range between each consecutive slump test for each type of mixture shall be plotted on a single control chart for range on which an upper action limit is set at 2 inches. Samples for slump shall be taken at the mixer. However, the Contractor is responsible for delivering the concrete to the placement site at the stipulated slump. If the Contractor's materials or transportation methods cause slump loss between the mixer and the placement, correlation samples shall be taken at the placement site as required by the Contracting Officer, and the slump at the mixer controlled as directed.

d. Slump Corrective Action. Whenever points on the control charts for slump reach the upper warning limit, an adjustment shall immediately be made in the batch weights of water and fine aggregate. The adjustments are to be made so that the total water content does not exceed that amount allowed by the maximum w/c ratio specified, based on aggregates which are in a saturated surface dry condition. When a single slump reaches the upper or lower action limit, no further concrete shall be delivered to the placing site until proper adjustments have been made. Immediately after each adjustment, another test shall be made to verify the correctness of the adjustment. Whenever two consecutive individual slump tests, made during a period when there was no adjustment of batch weights, produce a point on the control chart for range at or above the upper action limit, the concreting operation shall immediately be halted, and the Contractor shall take appropriate steps to bring the slump under control. Additional slump tests shall be made as directed.

e. Temperature. The temperature of the concrete shall be measured when compressive strength specimens are fabricated. Measurement shall be in accordance with ASTM C 1064. The temperature shall be reported along with the compressive strength data.

f. Strength Specimens. At least one set of test specimens shall be made, for compressive or flexural strength as appropriate, on each different concrete mixture placed during the day for each 50 cubic yards or portion thereof of that concrete mixture placed each day. Additional sets of test specimens shall be made, as

directed by the Contracting Officer, when the mixture proportions are changed or when low strengths have been detected. A truly random (not haphazard) sampling plan shall be developed by the Contractor and approved by the Contracting Officer prior to the start of construction. The plan shall assure that sampling is done in a completely random and unbiased manner. A set of test specimens for concrete with a 28-day specified strength per paragraph Strength Requirements in PART 1 shall consist of four specimens, two to be tested at 7 days and two at 28 days. Test specimens shall be molded and cured in accordance with ASTM C 31 and tested in accordance with ASTM C 39 for test cylinders and ASTM C 78 for test beams. Results of all strength tests shall be reported immediately to the Contracting Officer. Quality control charts shall be kept for individual strength "tests", ("test" as defined in paragraph Strength Requirements in PART 1) moving average of last 3 "tests" for strength, and moving average for range for the last 3 "tests" for each mixture. The charts shall be similar to those found in ACI 214.3R.

3.16.6 Inspection Before Placing

Foundations, construction joints, forms, and embedded items shall be inspected by the Contractor in sufficient time prior to each concrete placement in order to certify to the Contracting Officer that they are ready to receive concrete. The results of each inspection shall be reported in writing.

3.16.7 Placing

The placing foreman shall supervise placing operations, shall determine that the correct quality of concrete or grout is placed in each location as specified and as directed by the Contracting Officer, and shall be responsible for measuring and recording concrete temperatures and ambient temperature hourly during placing operations, weather conditions, time of placement, volume placed, and method of placement. The placing foreman shall not permit batching and placing to begin until it has been verified that an adequate number of vibrators in working order and with competent operators are available. Placing shall not be continued if any pile of concrete is inadequately consolidated. If any batch of concrete fails to meet the temperature requirements, immediate steps shall be taken to improve temperature controls.

3.16.8 Vibrators

The frequency and amplitude of each vibrator shall be determined in accordance with COE CRD-C 521 prior to initial use and at least once a month when concrete is being placed. Additional tests shall be made as directed when a vibrator does not appear to be adequately consolidating the concrete. The frequency shall be determined while the vibrator is operating in concrete with the tachometer being held against the upper end of the vibrator head while almost submerged and just before the vibrator is withdrawn from the concrete. The amplitude shall be determined with the head vibrating in air. Two measurements shall be taken, one near the tip and another near the upper end of the vibrator head, and these results

averaged. The make, model, type, and size of the vibrator and frequency and amplitude results shall be reported in writing. Any vibrator not meeting the requirements of paragraph Consolidation, shall be immediately removed from service and repaired or replaced.

3.16.9 Curing Inspection

a. Moist Curing Inspections. At least once each shift, and not less than twice per day on both work and non-work days, an inspection shall be made of all areas subject to moist curing. The surface moisture condition shall be noted and recorded.

b. Moist Curing Corrective Action. When a daily inspection report lists an area of inadequate curing, immediate corrective action shall be taken, and the required curing period for those areas shall be extended by 1 day.

c. Membrane Curing Inspection. No curing compound shall be applied until the Contractor has verified that the compound is properly mixed and ready for spraying. At the end of each operation, the Contractor shall estimate the quantity of compound used by measurement of the container and the area of concrete surface covered, shall compute the rate of coverage in square feet per gallon, and shall note whether or not coverage is uniform.

d. Membrane Curing Corrective Action. When the coverage rate of the curing compound is less than that specified or when the coverage is not uniform, the entire surface shall be sprayed again.

e. Sheet Curing Inspection. At least once each shift and once per day on non-work days, an inspection shall be made of all areas being cured using impervious sheets. The condition of the covering and the tightness of the laps and tapes shall be noted and recorded.

f. Sheet Curing Corrective Action. When a daily inspection report lists any tears, holes, or laps or joints that are not completely closed, the tears and holes shall promptly be repaired or the sheets replaced, the joints closed, and the required curing period for those areas shall be extended by 1 day.

3.16.10 Cold-Weather Protection

At least once each shift and once per day on non-work days, an inspection shall be made of all areas subject to cold-weather protection. Any deficiencies shall be noted, corrected, and reported.

3.16.11 Mixer Uniformity

a. Stationary Mixers. Prior to the start of concrete placing and once every 6 months when concrete is being placed, or once for every 75,000 cubic yards of concrete placed, whichever results in the shortest time interval, uniformity of concrete mixing shall be determined in accordance with ASTM C 94.

b. Truck Mixers. Prior to the start of concrete placing and at least once every 6 months when concrete is being placed, uniformity of concrete mixing shall be determined in accordance with ASTM C 94. The truck mixers shall be selected randomly for testing. When satisfactory performance is found in one truck mixer, the performance of mixers of substantially the same design and condition of the blades may be regarded as satisfactory.

c. Mixer Uniformity Corrective Action. When a mixer fails to meet mixer uniformity requirements, either the mixing time shall be increased, batching sequence changed, batch size reduced, or adjustments shall be made to the mixer until compliance is achieved.

3.16.12 Reports

All results of tests or inspections conducted shall be reported informally as they are completed and in writing daily. A weekly report shall be prepared for the updating of control charts covering the entire period from the start of the construction season through the current week. During periods of cold-weather protection, reports of pertinent temperatures shall be made daily. These requirements do not relieve the Contractor of the obligation to report certain failures immediately as required in preceding paragraphs. Such reports of failures and the action taken shall be confirmed in writing in the routine reports. The Contracting Officer has the right to examine all contractor quality control records.

-- End of Section --

SECTION 03366

CHEMICALLY STAINED CONCRETE

PART 1 GENERAL

1.1 SUBMITTALS

Government approval is required for submittals with a "GA" designation; submittals having an "FIO" designation are for information only. The following shall be submitted in accordance with Section 01330 SUBMITTAL PROCEDURES:

SD-01 Data

Chemical Stain; FIO.

Manufacturer's product data shall be submitted for chemical concrete stain.

SD-13 Certificates

Chemical Stain; FIO

Prior to installation submit copies of a signed affidavit from the manufacturer of the coloring stain stating that coloring product to be used on concrete is compatible with the existing substrate, and that no adverse affects will occur.

SD-14 Samples

Chemical Stain; GA

Submit a 12 in. x 12 in. minimum square panel of stained concrete exhibiting the color and finish, subject to approval of the Contracting Officer. Contractor shall resubmit, at no extra cost to the Owner, as many samples as necessary until the color is approved. The accepted panel shall become the standard for the mock-up and shall remain undisturbed until completion and approval of mock-up.

1.2 MOCK-UPS

Before beginning primary work of this Section, provide mock-ups at locations acceptable to Contracting Officer and obtain acceptance of visual qualities. Protect and maintain acceptable mock-ups throughout the work of this Section to serve as criteria for acceptance of this work.

1. Staining: Provide staining test mock-ups prior to beginning exterior production staining. Test various application techniques and solutions to determine the best methods for the conditions encountered. Provide one 25 S.F. test panel at location

acceptable to Contracting Officer. Demonstrate Contractor's quality control system to ensure uniform final appearance. Keep accurate, detailed records of concentrations, solutions, and techniques used to assist in replicating satisfactory results.

PART 2 PRODUCTS

2.1 CHEMICAL STAINS

Provide Lithocrome Chemstain penetrating stain, manufactured by L.M. Scofield Company, or approved equal, suitable for coloring concrete surfaces, where indicated on Drawings.

Chemical stain shall be a water solution of metallic salts that penetrate and react with the concrete to produce insoluble, abrasion-resistant color deposits in the pores.

Color shall be as indicated under Section 09915, COLOR SCHEDULE.

2.2 SEALER

Sealer shall be a water based, clear acrylic emulsion specifically formulated for protecting chemically stained concrete floors.

Product: Provide Cementone clear sealer as manufactured by L.M. Scofield Company, or approved equal.

PART 3 EXECUTION

3.1 PREPARATION, NEW CONCRETE

Newly placed concrete shall be cured sufficiently to allow the concrete to become reactive. Length of curing shall be between 14 and 28 days, depending on the color being used. Comply with manufacturer's strict recommendations.

Liquid curing materials shall not be used on concrete to be stained. Concrete flatwork shall be cured with new, unwinkled, non-staining, high quality curing paper.

All surfaces to be stained shall be cured with the same methods. Different sections to be chemically stained shall be cured for the same amount of time to ensure that all concrete is stained at the same age.

Immediately prior to staining, the concrete surfaces shall be thoroughly cleaned. Surfaces shall be swept clean, then pressure washed or scrubbed using a rotary floor machine. Surfaces shall be rinsed thoroughly after cleaning until the rinse water is completely clean. Allow fllors to dry thoroughly prior to application of floor stains.

3.2 CONCRETE STAINING

Concrete stain mixture ratios, application rates, and application methods shall be in strict conformance with the manufacturer's recommendations and

produce a concrete color meeting the Contracting Officer's approval.

3.3 APPLICATION

Minimum Spreading Rate: Apply stain at manufacturer's recommended spreading rate to ensure proper penetration. Use applicators and techniques best suited for substrate and type of stain material being applied.

1. Do not apply stain on surfaces that are not sufficiently dry.

Apply stain evenly with brush, roller, or spray and immediately scrubbed into the surface.

When multiple coats of stain are required, washing and drying between coats is required to evaluate the color prior to the next coat.

After the final coat of stain has been applied, and has remained on the surface for a minimum of 4 hours, all residue must be removed by wet scrubbing with a commercial grade detergent. The surface shall be rinsed after scrubbing until the rinse water is completely clean. Run-off may stain surrounding surfaces or harm plant life. Run-off shall be collected by wet-vac or absorbed with an inert material.

Allow surfaces to dry completely prior to applying clear sealer.

3.4 APPLICATION OF CLEAR SEALER

Apply first coat clear sealer at rates as recommeneded by manufacturer. Maintain a wet edge at all times. Allow sealer to completely dry prior to applying additional coats.

Apply second coat of clear sealer at rates recommended by the manufacturer, 90 degrees to the direction of the first coat, using the same application method

-- End of Section --

SECTION 04200

MASONRY

PART 1 GENERAL

1.1 REFERENCES

The publications listed below form a part of this specification to the extent referenced. The publications are referred to in the text by basic designation only.

ACI INTERNATIONAL (ACI)

ACI SP-66	(1994) ACI Detailing Manual
ACI 530.1	(1995) Specifications for Masonry Structures

American Society of Civil Engineers (ASCE)

ASCE 6	(1995) Specifications for Masonry Structures

AMERICAN SOCIETY FOR TESTING AND MATERIALS (ASTM)

ASTM A 82	(1995a) Steel Wire, Plain, for Concrete Reinforcement
ASTM A 153	(1996) Zinc Coating (Hot-Dip) on Iron and Steel Hardware
ASTM A 615/A 615M	(1996a) Deformed and Plain Billet-Steel Bars for Concrete Reinforcement
ASTM C 67	(1996) Sampling and Testing Brick and Structural Clay Tile
ASTM C 90	(1996a) Loadbearing Concrete Masonry Units
ASTM C 91	(1996) Masonry Cement
ASTM C 140	(1996b) Sampling and Testing Concrete Masonry Units
ASTM C 216	(1995a) Facing Brick (Solid Masonry Units Made from Clay or Shale)
ASTM C 270	(1997) Mortar for Unit Masonry

ASTM C 476	(1995) Grout for Masonry
ASTM C 494	(1992) Chemical Admixtures for Concrete
ASTM C 578	(1995) Rigid, Cellular Polystyrene Thermal Insulation
ASTM C 641	(1982; R 1991) Staining Materials in Lightweight Concrete Aggregates
ASTM C 744	(1996a) Prefaced Concrete and Calcium Silicate Masonry Units
ASTM C 780	(1996) Preconstruction and Construction Evaluation of Mortars for Plain and Reinforced Unit Masonry
ASTM C 1019	(1989a; R 1993) Sampling and Testing Grout
ASTM C 1072	(1994) Measurement of Masonry Flexural Bond Strength
ASTM C 1364	(1997) Specifications for Architectural Cast Stone
ASTM D 2000	(1996) Rubber Products in Automotive Applications
ASTM D 2240	(1997) Rubber Property - Durometer Hardness
ASTM D 2287	(1996) Nonrigid Vinyl Chloride Polymer and Copolymer Molding and Extrusion Compounds
ASTM E 447	(1992b) Compressive Strength of Masonry Prisms

The Masonry Society (TMS)

TMS 602	(1995) Specifications for Masonry Structure

1.2 SUBMITTALS

Government approval is required for submittals with a "GA" designation; submittals having an "FIO" designation are for information only. The following shall be submitted in accordance with Section 01330 SUBMITTAL PROCEDURES:

SD-01 Data

Clay or Shale Brick; GA. Concrete Brick; Concrete Masonry Units; GA. Ground Faced Concrete Masonry Units; GA. GA. Prefaced Concrete Masonry Units; GA. Insulation; GA. Cast Stone; GA.

Manufacturer's descriptive data.

Qualifications; GA.

Documentation showing masonry contractor's 10 years experience, including not less than 3 projects of comparable size and scope to that required for this Project. Provide all necessary references.

SD-04 Drawings

Masonry Work; GA.

Drawings including plans, elevations, and details of wall reinforcement; details of reinforcing bars at corners and wall intersections; offsets; tops, bottoms, and ends of walls; control and expansion joints; and wall openings. Bar splice locations shall be shown. Bent bars shall be identified on a bending diagram and shall be referenced and located on the drawings. Wall dimensions, bar clearances, and wall openings greater than one masonry unit in area shall be shown. No approval will be given to the shop drawings until the Contractor certifies that all openings, including those for mechanical and electrical service, are shown. If, during construction, additional masonry openings are required, the approved shop drawings shall be resubmitted with the additional openings shown along with the proposed changes. Location of these additional openings shall be clearly highlighted. The minimum scale for wall elevations shall be 1/4 inch per foot. Reinforcement bending details shall conform to the requirements of ACI SP-66.

Cast Stone Work; GA.

Provide shop drawings for all shapes of cast stone pieces required for the work. Show fabrication and installation details for cast stone units. Include dimensions; details of reinforcement and anchorages, if any; and indication of finished faces. Include building elevations showing layout of units and locations of joints and anchors.

SD-08 Statements

Cold Weather Installation; GA.

Cold weather construction procedures.

Mortar Mix Proportions; GA. Grout Mix Proportions; GA.

The results of trial mixture design studies along with a statement giving the maximum nominal coarse aggregate size and the proportions of ingredients that will be used in the manufacture of each mortar or grout mix, at least 21 days prior to commencing mortar or grout placing operations. Aggregate weights shall be based on the saturated surface dry condition. The statement shall be accompanied by test results from an approved independent commercial testing laboratory, showing that mixture design studies have been made with materials proposed for the project and that the proportions selected will produce mortar and grout of the qualities indicated. No substitutions shall be made in the materials used

in the mixture design studies without additional tests to show that the quality of the mortar or grout is satisfactory.

SD-09 Reports

Efflorescence Test; GA. Field Testing of Mortar; GA. Field Testing of Grout; GA. Prism tests; GA. Masonry Cement; GA. Fire-rated CMU; GA.

Test reports from an approved independent laboratory. Test reports on a previously tested material shall be certified as being the same as that proposed for use in this project.

Special Inspection; GA.

Copies of masonry inspector reports.

Cast Stone Test Reports; GA

From a qualified testing agency indicating and interpreting test results for compliance of cast stone with requirements indicated.

SD-13 Certificates

Clay or Shale Brick; FI0. Concrete Masonry Units (CMU); FIO. Ground Faced Concrete Masonry Units; FIO. Prefaced Concrete Masonry Units; FIO. Control Joint Keys; FIO. Anchors, Ties, and Bar Positioners; FIO. Expansion-Joint Materials; FIO. Joint Reinforcement; FIO. Reinforcing Steel Bars and Rods; FIO. Masonry Cement; FIO. Mortar Coloring; FIO. Insulation; FIO. Cast Stone Items; FIO. Mortar Admixtures; GA. Grout Admixtures; GA.

Certificates of compliance stating that the materials meet the specified requirements.

SD-14 Samples

Concrete Masonry Units (CMU); GA. Ground Faced Concrete Masonry Units; GA. Prefaced Concrete Masonry Units; GA. Concrete Brick; GA. Stone Items; GA. Clay or Shale Brick; GA.

Color samples of three stretcher units and one unit for each type of special shape. Units shall show the full range of color and texture.

Anchors, Ties, and Bar Positioners; GA.

Two of each type used.

Expansion-Joint Material; GA.

One piece of each type used.

Joint Reinforcement; GA.

One piece of each type used, including corner and wall intersection pieces,

showing at least two cross wires.

Cast Stone Samples; GA

For each color and texture of cast stone required, 10 inches square in size.

Insulation; GA.

One piece of board type insulation, not less than 16 inchesby 24 inches in size, containing the label indicating the rated permeance and R-values.

Portable Panel; GA.

One panel of clay or shale brick, 2 feet by 2 feet, containing approximately 24 brick facings to establish range of color and texture.

1.3 SAMPLE MASONRY PANELS

After material samples are approved and prior to starting masonry work, sample masonry panels shall be constructed for each type and color of masonry required. At least 48 hours prior to constructing the sample panel or panels, the Contractor shall submit written notification to the Contracting Officer's Representative. Sample panels shall not be built in, or as part of the structure, but shall be located where directed. Sample panels shall include cast stone shapes as required.

1.3.1 Configuration

Panels shall be L-shaped or otherwise configured to represent all of the wall elements, including cast stone. Panels shall be of the size necessary to demonstrate the acceptable level of workmanship for each type of masonry represented on the project. The minimum size of a straight panel or a leg of an L-shaped panel shall be 8 feet long by 6 feet high.

1.3.2 Composition

Panels shall show full color range, texture, and bond pattern of the masonry work. The Contractor's method for mortar joint tooling; grouting of reinforced vertical cores, collar joints, bond beams, and lintels; positioning, securing, and lapping of reinforcing steel; positioning and lapping of joint reinforcement (including prefabricated corners); and cleaning of masonry work shall be demonstrated during the construction of the panels. Installation or application procedures for anchors, wall ties, CMU control joints, brick expansion joints, insulation, flashing, brick soldier, row lock courses and weep holes shall be shown in the sample panels. The panels shall contain a masonry bonded corner that includes a bond beam corner. Panels that represent reinforced masonry shall contain a 2 foot by 2 foot opening placed at least 2 feet above the panel base and 2 feet away from all free edges, corners, and control joints. Required reinforcing shall be provided around this opening as well as at wall corners and control joints.

1.3.3 Construction Method

Where anchored veneer walls are required, the Contractor shall demonstrate and receive approval for the method of construction; i.e., either bring up the two wythes together or separately, with the insulation and appropriate ties placed within the specified tolerances across the cavity. Temporary provisions shall be demonstrated to preclude mortar or grout droppings in the cavity and to provide a clear open air space of the dimensions shown on the drawings. Where masonry is to be grouted, the Contractor shall demonstrate and receive approval on the method that will be used to bring up the masonry wythes; support the reinforcing bars; and grout cells, bond beams, lintels, and collar joints using the requirements specified herein. If sealer is specified to be applied to the masonry units, sealer shall be applied to the sample panels. Panels shall be built on a properly designed concrete foundation.

1.3.4 Usage

The completed panels shall be used as the standard of workmanship for the type of masonry represented. Masonry work shall not commence until the sample panel for that type of masonry construction has been completed and approved. Panels shall be protected from the weather and construction operations until the masonry work has been completed and approved. After completion of the work, the sample panels, including all foundation concrete, shall become the property of the Contractor and shall be removed from the construction site.

1.4 DELIVERY, HANDLING, AND STORAGE

Materials shall be delivered, handled, stored, and protected to avoid chipping, breakage, and contact with soil or contaminating material.

1.4.1 Masonry Units

Concrete masonry units shall be covered or protected from inclement weather and shall conform to the moisture content as specified in ASTM C 90 when delivered to the jobsite and at all times. In addition, prefaced concrete units shall be stored with their finish surfaces covered. Prefabricated lintels shall be marked on top sides to show either the lintel schedule number or the number and size of top and bottom bars.

1.4.2 Reinforcement, Anchors, and Ties

Steel reinforcing bars, coated anchors, ties, and joint reinforcement shall be stored above the ground. Steel reinforcing bars and uncoated ties shall be free of loose mill scale and rust.

1.4.3 Cementitious Materials, Sand and Aggregates

Cementitious and other packaged materials shall be delivered in unopened containers, plainly marked and labeled with manufacturers' names and brands. Cementitious material shall be stored in dry, weathertight enclosures or be completely covered. Cement shall be handled in a manner that will prevent the inclusion of foreign materials and damage by water or dampness. Sand and aggregates shall be stored in a manner to prevent contamination or segregation.

1.5 SPECIAL INSPECTION

A qualified masonry inspector approved by the Contracting Officer shall perform inspection of the masonry work. Minimum qualifications for the masonry inspector shall be 5 years of reinforced masonry inspection experience or acceptance by a State, municipality, or other governmental body having a program of examining and certifying inspectors for reinforced masonry construction. The masonry inspector shall be present during preparation of masonry prisms, sampling and placing of masonry units, placement of reinforcement (including placement of dowels in footings, slabs and foundation walls), inspection of grout space, immediately prior to closing of cleanouts, and during grouting operations. The masonry inspector shall assure Contractor compliance with the drawings and specifications. The masonry inspector shall keep a complete record of all inspections and shall submit daily written reports to the Quality Control Supervisory Representative reporting the quality of masonry construction. The masonry inspector may other duties provided such other duties shall not interfere with required masonry inspections.

PART 2 PRODUCTS

2.1 GENERAL REQUIREMENTS

The source of materials which will affect the appearance of the finished work shall not be changed after the work has started except with Contracting Officer's approval.

2.2 CLAY OR SHALE BRICK

Color range and texture of clay or shale brick shall be as required and shall conform to the approved sample. Grade SW shall be used for all brick in exterior work. Brick shall be tested for efflorescence. Clay or shale brick units shall be delivered factory-blended to provide a uniform appearance and color range in the completed wall.

2.2.1 Solid Clay or Shale Brick

Solid clay brick shall conform to ASTM C 216, Type FBS with minimum compressive strength of 8,000 psi average of 5; 7,000 psi minimum individual and maximum cold water absorption of 4 percent. Brick size shall be modular and the nominal size of the brick used shall be 4 inches thick, 4 inches high, and 12 inches long. Provide lip stretcher units, special shapes and solid units with no cores or frogs where cores or frogs would be exposed in the finish work. Color of brick shall be as indicated in Section 09915, COLOR SCHEDULE.

2.2.2 Infill Brick

Infill brick used for new brick infills at existing walls, shall conform to ASTM C 216, Type FBS. Brick size shall be modular and the nominal size of the brick used shall be 4 inches thick, 2-1/4 inches high, and 8 inches long, as required to match existing. Color of brick shall be as indicated in Section 09915, COLOR SCHEDULE.

2.3 CONCRETE MASONRY UNITS (CMU)

Hollow and solid concrete masonry units shall conform to ASTM C 90, Type I. Cement shall have a low alkali content and be of one brand. All Concrete Masonry (CMU) used on the project shall be Lightweight CMU, with 110 lbs. - 115 lbs. per cubic foot density.

2.3.1 Aggregates

Lightweight aggregates and blends of lightweight and heavier aggregates in proportions used in producing the units, shall comply with the following requirements when tested for stain-producing iron compounds in accordance with ASTM C 641: by visual classification method, the iron stain deposited on the filter paper shall not exceed the "light stain" classification.

2.3.2 Kinds and Shapes

Units shall be modular in size and shall include closer, jamb, header, lintel, and bond beam units and special shapes and sizes to complete the work as indicated. In exposed interior masonry surfaces, units having a bullnose shall be used for vertical external corners except at door, window, and louver jambs. Radius of the bullnose shall be 1 inch. Units used in exposed masonry surfaces in any one building shall have a uniform fine to medium texture and a uniform color.

2.3.2.1 Ground Faced CMU Units

Units shall have ground faces. All Ground Face CMU used on the project shall be Lightweight Ground-Faced CMU, with 110 lbs. - 115 lbs. per cubic foot density maximum. Colors of ground face CMU shall be as indicated in Section 09915, COLOR SCHEDULE.

2.3.3 Fire-Rated CMU

Concrete masonry units, ground faced CMU units and prefaced (glazed) CMU units used in fire-rated construction shown on the drawings shall be of minimum equivalent thickness for the fire rating indicated and the corresponding type of aggregates indicated in TABLE I. Units containing more than one of the aggregates listed in TABLE I will be rated on the aggregate requiring the greater minimum equivalent thickness to produce the required fire rating.

TABLE I

FIRE-RATED CONCRETE MASONRY UNITS

See note (a) below

	Minimum equivalent thickness inches for fire rating of:		
Aggregate Type	4 hours	3 hours	2 hours

TABLE I

FIRE-RATED CONCRETE MASONRY UNITS

See note (a) below

Pumice	4.7	4.0	3.0
Expanded slag	5.0	4.2	3.3
Expanded clay, shale, or slate	5.7	4.8	3.7
Limestone, scoria, cinders or unexpanded slag	5.9	5.0	4.0
Calcareous gravel	6.2	5.3	4.2
Siliceous gravel	6.7	5.7	4.5

(a) Minimum equivalent thickness shall equal net volume as determined in conformance with ASTM C 140 divided by the product of the actual length and height of the face shell of the unit in inches. Where walls are to receive plaster or be faced with brick, or otherwise form an assembly; the thickness of plaster or brick or other material in the assembly will be included in determining the equivalent thickness.

2.4 PREFACED (GLAZED) CONCRETE MASONRY UNITS

Prefaced (glazed) concrete masonry units shall conform to ASTM C 744 using masonry units conforming to ASTM C 90, Type 1. Where such units are required as part of a fire rated assembly, units shall further comply with requirements for fire-rated CMU as specified above. The facing shall turn over the edges and ends of the unit at least 3/8 inch in the direction of the thickness of the unit to form a lip at least 1/16 inch thick. Variation in color and texture shall not exceed that of the approved samples. All shapes and sizes shall be provided for a complete installation. Provide radius corner units at all vertical external corners. Radius of the corner shall be 1 inch. Base units shall be coved to meet finished floor surfaces where ceramic tile floor occurs. Color of prefaced CMU shall be as indicated in Section 09915, COLOR SCHEDULE.

2.5 CAST STONE ITEMS

Trim, lintels, copings, splashblocks and door sills shall be factory-made units from a plant regularly engaged in producing cast stone units. Unless otherwise indicated, concrete shall be 3,500 psi minimum conforming to Section requirements as specified herein.

2.5.1 Manufacturers:

Subject to compliance with requirements, provide products by one of the

following:

1. W. N. Russell & Co., Westmount, New Jersey.
2. Continental Cast Stone, Shawnee, Kansas.
3. Dallas Cast Stone Co., Dallas, Texas.

2.5.2 CAST STONE MATERIALS

2.5.2.1 General:

Comply with ASTM C 1364 and the following:

2.5.2.2 Portland Cement:

ASTM C 150, Type I, White Cement, containing not more than 0.60 percent total alkali when tested according to ASTM C 114.

2.5.2.3 Coarse Aggregates:

Manufactured aggregate from limestone complying with ASTM C 33; gradation as needed to produce required textures.

2.5.2.4 Fine Aggregates:

Manufactured or natural limestone sands complying with ASTM C 33, gradation as needed to produce required textures.

2.5.2.5 Air-Entraining Admixture:

ASTM C 260, certified by the manufacturer to be compatible with other admixtures used. Add to mixes for units exposed to the exterior at manufacturer's prescribed rate to result in an air content of 5 to 7 percent.

2.5.2.6 Reinforcement:

Deformed steel bars complying with ASTM A 615/A 615M.

1. Galvanized Coating: ASTM A 767/A 767M.

2.5.2.7 Embedded Anchors and Other Inserts:

Fabricated from stainless steel complying with ASTM A 276 or ASTM A 666, Type 304.

2.5.3 CAST STONE UNITS

2.5.3.1 General:

Provide cast stone units complying with ASTM C 1364.

Provide units that are resistant to freezing and thawing as determined by laboratory testing according to ASTM C 666, Procedure A, as modified by ASTM C 1364.

2.5.3.2 Reinforced Units:

Reinforce units as indicated and as required by ASTM C 1364. Use galvanized reinforcement.

2.5.3.3 Fabrication:

Fabricate units using the "Dry Tamp" or "Wet Cast" method, with sharp arris and details accurately reproduced with indicated texture on all exposed surfaces, unless otherwise indicated.

1. Slope exposed horizontal surfaces at least 1:12, unless otherwise indicated.
2. Provide raised fillets at backs of sills and at ends indicated to be built into jambs.
3. Provide drips on projecting elements, unless otherwise indicated.

2.5.3.4 Curing:

Cure and finish units as follows:

1. Cure units in totally enclosed curing room under dense fog and water spray at 95 percent relative humidity for 24 hours.
2. Yard cure units until the sum of the mean daily temperatures for each day equals or exceeds 350 deg F.
3. Acid etch units to remove cement film from surfaces indicated to be finished.

2.5.3.5 Color and Texture:

Provide units with fine-grained, acid-etched texture and white color, equal to W. N. Russell & Co. "White Limestone Sandtex Finish"..

2.5.4 CAST STONE ACCESSORIES

2.5.4.1 Cast Stone Anchors:

Type and size indicated, fabricated from stainless steel complying with ASTM A 276 or ASTM A 666, Type 304.

2.5.4.2 Cast Stone Dowels:

Round stainless-steel bars complying with ASTM A 276, Type 304, 1/2-inch diameter. Provide dowels at 32 inches on center, but not less than 2 dowels per unit. Dowels shall be a minimum of 6 inches long, with a 4 inch minimum embedment into supporting masonry.

2.5.4.3 Job-Mixed Detergent Solution:

Solution of 1/2 cup of dry-measure tetrasodium polyphosphate and 1/2 cup of dry-measure laundry detergent dissolved in 1 gal. of water.

2.6 MORTAR

Mortar for all exterior walls shall be Type S in accordance with the proportion specification of ASTM C 270 except Type S cement-lime mortar proportions shall be 1 part cement, 1/2 part lime and 4-1/2 parts aggregate. Mortar for all interior walls shall be Type N in accordance with the proportions specifications of ASTM C 270, except Type N cement-lime mortar proportions shall be 1 part cement, 1 part lime and 6 parts aggregate; when masonry cement ASTM C 91 is used the maximum air content shall be limited to 12 percent and performance equal to cement-lime mortar shall be verified. Verification of masonry cement performance shall be based on ASTM C 780 and ASTM C 1072. Mortar for prefaced concrete masonry unit wainscots shall contain aggregates with 100 percent passing the No. 8 sieve and 95 percent passing the No. 16 sieve. Pointing mortar in showers and kitchens shall contain ammonium stearate, or aluminum tri-stearate, or calcium stearate in an amount equal to 3 percent by weight of cement used. Cement shall have a low alkali content and be of one brand. Aggregates shall be from one source.

2.6.1 Admixtures

In cold weather, a non-chloride based accelerating admixture may be used subject to approval. Accelerating admixture shall be non-corrosive, shall contain less than 0.2 percent chlorides, and shall conform to ASTM C 494, Type C.

2.6.2 Coloring

Mortar coloring shall be added to the mortar used for exposed masonry surfaces to produce a uniform color matching sample selected by Contracting Officer. Mortar coloring shall not exceed 3 percent of the weight of cement for carbon black and ten percent of the weight of cement for all other pigments. Mortar coloring shall be chemically inert, of finely ground limeproof pigment, and furnished in accurately pre-measured and packaged units that can be added to a measured amount of cement.

Color of mortar shall be as indicated in Section 09915, COLOR SCHEDULE.

2.7 GROUT

Grout shall conform to ASTM C 476. Cement used in grout shall have a low alkali content. Grout slump shall be between 8 and 10 inches. Grout shall be used subject to the limitations of Table III. Proportions shall not be changed and materials with different physical or chemical characteristics shall not be used in grout for the work unless additional evidence is furnished that the grout meets the specified requirements.

2.7.1 Admixtures

In cold weather, a non-chloride based accelerating admixture may be used subject to approval. Accelerating admixture shall be non-corrosive, shall contain less than 0.2 percent chlorides, and shall conform to ASTM C 494, Type C.

2.7.2 Grout Barriers

Grout barriers for vertical cores shall consist of fine mesh wire, fiberglass, or expanded metal.

2.8 ANCHORS, TIES, AND BAR POSITIONERS

Anchors and ties shall be fabricated without drips or crimps and shall be zinc-coated in accordance with ASTM A 153, Class B-2. Steel wire used for anchors and ties shall be fabricated from steel wire conforming to ASTM A 82. Anchors and ties shall be sized to provide a minimum of 5/8 inch mortar cover from either face.

2.8.1 Wire Mesh Ties

Wire mesh for tying 4 inch thick concrete masonry unit partitions to other intersecting masonry partitions shall be 1/2 inch mesh of minimum 16 gauge steel wire. Minimum lengths shall be not less than 12 inches.

2.8.2 Wall Ties

Wall ties shall be rectangular-shaped or Z-shaped fabricated of 3/16 inch diameter zinc-coated steel wire. Rectangular wall ties shall be no less than 4 inches wide. Wall ties may also be of a continuous type conforming to paragraph JOINT REINFORCEMENT. Adjustable type wall ties, if approved for use, shall consist of two essentially U-shaped elements fabricated of 3/16 inch diameter zinc-coated steel wire. Adjustable ties shall be of the double pintle to eye type and shall allow a maximum of 1/2 inch eccentricity between each element of the tie. Play between pintle and eye opening shall be not more than 1/16 inch. The pintle and eye elements shall be formed so that both can be in the same plane.

2.8.3 Dovetail Anchors

Dovetail anchors shall be of the flexible wire type, 3/16 inch diameter zinc-coated steel wire, triangular shaped, and attached to a 12 gauge or heavier steel dovetail section. These anchors shall be used for anchorage of veneer wythes or composite-wall facings extending over the face of concrete columns, beams, or walls. Cells within vertical planes of these anchors shall be filled solid with grout for full height of walls or partitions, or solid units may be used. Dovetail slots are specified in Section 03300 CAST-IN-PLACE STRUCTURAL CONCRETE.

2.8.4 Adjustable Anchors

Adjustable anchors shall be 3/16 inch diameter steel wire, triangular-shaped. Anchors attached to steel shall be 5/16 inch diameter steel bars placed to provide 1/16 inch play between flexible anchors and structural steel members. Spacers shall be welded to rods and columns. Equivalent welded-on steel anchor rods or shapes standard with the flexible-anchor manufacturer may be furnished when approved. Welds shall be cleaned and given one coat of zinc-rich touch up paint.

2.8.5 Bar Positioners

Bar positioners, used to prevent displacement of reinforcing bars during the course of construction, shall be factory fabricated from 9 gauge steel wire or equivalent, and coated with a hot-dip galvanized finish. Not more than one wire shall cross the cell.

2.9 JOINT REINFORCEMENT

Joint reinforcement shall be factory fabricated from steel wire conforming to ASTM A 82, welded construction. Tack welding will not be acceptable in reinforcement used for wall ties. Wire shall have zinc coating conforming to ASTM A 153, Class B-2. All wires shall be a minimum of 9 gauge. Reinforcement shall be ladder type design, having one longitudinal wire in the mortar bed of each face shell for hollow units and one wire for solid units. Joint reinforcement shall be placed a minimum of 5/8 inch cover from either face. The distance between crosswires shall not exceed 16 inches. Joint reinforcement for straight runs shall be furnished in flat sections not less than 10 feet long. Joint reinforcement shall be provided with factory formed corners and intersections. If approved for use, joint reinforcement may be furnished with adjustable wall tie features.

2.10 REINFORCING STEEL BARS AND RODS

Reinforcing steel bars and rods shall conform to ASTM A 615/A 615M, Grade 60.

2.11 CONTROL JOINT KEYS

Control joint keys shall be a factory fabricated solid section of natural or synthetic rubber (or combination thereof) conforming to ASTM D 2000or polyvinyl chloride conforming to ASTM D 2287. The material shall be resistant to oils and solvents. The control joint key shall be provided with a solid shear section not less than 5/8 inchthick and 3/8 inch thick flanges, with a tolerance of plus or minus 1/16 inch. The control joint key shall fit neatly, but without forcing, in masonry unit jamb sash grooves. The control joint key shall be flexible at a temperature of minus 30 degrees F after five hours exposure, and shall have a durometer hardness of not less than 70 when tested in accordance with ASTM D 2240.

2.12 EXPANSION-JOINT MATERIALS

Backer rod and sealant shall be adequate to accommodate joint compression equal to 50 percent of the width of the joint. The backer rod shall be compressible rod stock of polyethylene foam, polyurethane foam, butyl rubber foam, or other flexible, nonabsorptive material as recommended by the sealant manufacturer. Sealant shall conform to Section 07900JOINT SEALING.

2.13 INSULATION

2.13.1 Rigid Board-Type Insulation

Rigid board-type insulation shall be extruded polystyrene. Polystyrene shall conform to ASTM C 578, minimum 25 lbs. per sq. in. compressive strength at 0.1 in. deformation, 2.0 lbs. per cu. ft. density, water vapor

transmission of 1.0 perm, and water absorption by volume of 0.1%. Provide boards with manufacturer's standard tongue and groove edges. The insulation shall be a standard product and shall be marked with not less than the manufacturer's trademark or name, the specification number, the permeance and R-values.

2.13.1.1 Insulation Thickness and Air Space

The cavity space shall allow for a maximum insulation thickness of 2 inches, and a minimum air space of 3/4 inch.

2.13.1.2 Aged R-Value

The insulation shall provide a minimum aged R-value of 11 for 2 inch overall thickness. The aged R-value shall be determined at 75 degrees F in accordance with the appropriate referenced specification. The stated R-value of the insulation shall be certified by an independent testing laboratory or certified by an independent Registered Professional Engineer if tests are conducted in the manufacturer's laboratory.

2.13.2 Insulation Adhesive

Insulation adhesive shall be specifically prepared to adhere the insulation to the masonry and, where applicable, to the thru-wall flashing. The adhesive shall not adversely affect the insulation, and shall have a record of satisfactory and proven performance for the conditions under which to be used.

2.14 FLASHING

Flashing shall be as specified in Section 07600 SHEET METALWORK, GENERAL.

PART 3 EXECUTION

3.1 ENVIRONMENTAL REQUIREMENTS

3.1.1 Hot Weather Installation

The following precautions shall be taken if masonry is erected when the ambient air temperature is more than 99 degrees F in the shade and the relative humidity is less than 50 percent. All masonry materials shall be shaded from direct sunlight; mortar beds shall be spread no more than 4 feet ahead of masonry; masonry units shall be set within one minute of spreading mortar; and after erection, masonry shall be protected from direct exposure to wind and sun for 48 hours.

3.1.2 Cold Weather Installation

Before erecting masonry when ambient temperature or mean daily air temperature falls below 40 degrees F, a written statement of proposed cold weather construction procedures shall be submitted for approval. The following precautions shall be taken during all cold weather erection.

3.1.2.1 Preparation

Ice or snow formed on the masonry bed shall be thawed by the application of heat. Heat shall be applied carefully until the top surface of the masonry is dry to the touch. Sections of masonry deemed frozen and damaged shall be removed before continuing construction of those sections.

a. Air Temperature 40 to 32 Degrees F. Sand or mixing water shall be heated to produce mortar temperatures between 40 degrees F and 120 degrees F.

b. Air Temperature 32 to 25 Degrees F.Sand and mixing water shall be heated to produce mortar temperatures between 40 degrees F and 120 degrees F. Temperature of mortar on boards shall be maintained above freezing.

c. Air Temperature 25 to 20 Degrees F. Sand and mixing water shall be heated to provide mortar temperatures between 40 degrees F and 120 degrees F. Temperature of mortar on boards shall be maintained above freezing. Sources of heat shall be used on both sides of walls under construction. Windbreaks shall be employed when wind is in excess of 15 mph.

d. Air Temperature 20 Degrees F and below. Sand and mixing water shall be heated to provide mortar temperatures between 40 degrees F and 120 degrees F. Enclosure and auxiliary heat shall be provided to maintain air temperature above 32 degrees F. Temperature of units when laid shall not be less than 20 degrees F.

3.1.2.2 Completed Masonry and Masonry Not Being Worked On

a. Mean daily air temperature 40 degrees F to 32 degrees F. Masonry shall be protected from rain or snow for 24 hours by covering with weather-resistive membrane.

b. Mean daily air temperature 32 degrees F to 25 degrees F. Masonry shall be completely covered with weather-resistant membrane for 24 hours.

c. Mean Daily Air Temperature 25 Degrees F to 20 Degrees F. Masonry shall be completely covered with insulating blankets or equally protected for 24 hours.

d. Mean Daily Temperature 20 Degrees F and Below. Masonry temperature shall be maintained above 32 degrees F for 24 hours by enclosure and supplementary heat, by electric heating blankets, infrared heat lamps, or other approved methods.

3.2 LAYING MASONRY UNITS

Exterior brick masonry shall be laid in 1/3 running bond. Brick in existing walls shall be laid to match existing bond pattern. All other masonry shall be laid running bond. Facing courses shall be level with back-up courses, unless the use of adjustable ties has been approved in

which case the tolerances shall be plus or minus 1/2 inch. Each unit shall be adjusted to its final position while mortar is still soft and plastic. Units that have been disturbed after the mortar has stiffened shall be removed, cleaned, and relaid with fresh mortar. Air spaces, cavities, chases, expansion joints, and spaces to be grouted shall be kept free from mortar and other debris. Units used in exposed masonry surfaces shall be selected from those having the least amount of chipped edges or other imperfections detracting from the appearance of the finished work. Vertical joints shall be kept plumb. Units being laid and surfaces to receive units shall be free of water film and frost. Solid units shall be laid in a nonfurrowed full bed of mortar. Mortar for veneer wythes shall be beveled and sloped toward the center of the wythe from the cavity side. Units shall be shoved into place so that the vertical joints are tight. Vertical joints of brick and the vertical face shells of concrete masonry units, except where indicated at control, expansion, and isolation joints, shall be completely filled with mortar. Mortar will be permitted to protrude up to 1/2 inch into the space or cells to be grouted. Means shall be provided to prevent mortar from dropping into the space below. In double wythe construction, the inner wythe may be brought up not more than 16 inches ahead of the outer wythe. Collar joints shall be filled with mortar or grout during the laying of the facing wythe, and filling shall not lag the laying of the facing wythe by more than 8 inches.

Where a range is specified for any surface, lay units to provide an even distribution of the range corresponding to the percentages of each unit color specified for any area.

3.2.1 Surface Preparation

Surfaces upon which masonry is placed shall be cleaned of laitance, dust, dirt, oil, organic matter, or other foreign materials and shall be slightly roughened to provide a surface texture with a depth of at least 1/8 inch. Sandblasting shall be used, if necessary, to remove laitance from pores and to expose the aggregate.

3.2.2 Forms and Shores

Forms and shores shall be sufficiently rigid to prevent deflections which may result in cracking or other damage to supported masonry and sufficiently tight to prevent leakage of mortar and grout. Supporting forms and shores shall not be removed in less than 10 days.

3.2.3 Concrete Masonry Units

Units in piers, pilasters, columns, starting courses on footings, slabs, solid foundation walls, lintels, and beams, and where cells are to be filled with grout shall be full bedded in mortar under both face shells and webs. Other units shall be full bedded under both face shells. Head joints shall be filled solidly with mortar for a distance in from the face of the unit not less than the thickness of the face shell. Jamb units shall be of the shapes and sizes to conform with wall units. Solid units may be incorporated in the masonry work where necessary to fill out at corners, gable slopes, and elsewhere as approved. Double walls shall be stiffened at wall-mounted plumbing fixtures by use of strap anchors, two

above each fixture and two below each fixture, located to avoid pipe runs, and extending from center to center of the double wall. Walls and partitions shall be adequately reinforced for support of wall-hung plumbing fixtures when chair carriers are not specified.

3.2.4 Clay Brick Units

Brick facing shall be laid with the better face exposed. Brick shall be laid in running bond with each course bonded at corners, unless otherwise indicated. Molded brick shall be laid with the frog side down. Brick that is cored, recessed, or has other deformations may be used in sills, treads, soldier courses, except where deformations will be exposed to view.

3.2.4.1 Wetting of Units

Wetting of clay, shale brick, or hollow brick units having an initial rate of absorption of more than 1 gram per minute per square inch of bed surface shall be in conformance with ASTM C 67. The method of wetting shall ensure that each unit is nearly saturated but surface dry when laid.

3.2.4.2 Solid Units

Bed, head, and collar joints shall be completely filled with mortar.

3.2.4.3 Hollow Units

Hollow units shall be laid as specified for concrete masonry units.

3.2.5 Tolerances

Comply with tolerances in ACI 530.1/ASCE 6/TMS 602 and the following:

1. For conspicuous vertical lines, such as external corners, door jambs, reveals, and expansion and control joints, do not vary from plumb by more than 1/4 inch in 20 feet.

2. For vertical alignment of exposed head joints, do not vary from plumb by more than 1/4 inch in 10 feet, nor 1/2 inch (12 mm) maximum.

3. For conspicuous horizontal lines, such as exposed lintels, sills, parapets, and reveals, do not vary from level by more than 1/4 inch in 20 feet, nor 1/2 inch maximum.

4. For exposed bed joints, do not vary from thickness indicated by more than plus or minus 1/8 inch, with a maximum thickness limited to 1/2 inch. Do not vary from bed-joint thickness of adjacent courses by more than 1/8 inch.

5. For exposed head joints, do not vary from thickness indicated by more than plus or minus 1/8 inch. Do not vary from adjacent bed-joint and head-joint thicknesses by more than 1/8 inch.

3.2.6 Cutting and Fitting

Full units of the proper size shall be used wherever possible, in lieu of cut units. Never use brick less then 1/2 length in exterior veneer. Cutting and fitting, including that required to accommodate the work of others, shall be done by masonry mechanics using power masonry saws. Concrete masonry units may be wet or dry cut. Wet cut units, before being placed in the work, shall be dried to the same surface-dry appearance as uncut units being laid in the wall. Cut edges shall be clean, true and sharp. Openings in the masonry shall be made carefully so that wall plates, cover plates or escutcheons required by the installation will completely conceal the openings and will have bottoms parallel with the masonry bed joints. Reinforced masonry lintels shall be provided above openings over 12 inches wide for pipes, ducts, cable trays, and other wall penetrations, unless steel sleeves are used.

3.2.7 Jointing

Joints shall be tooled when the mortar is thumbprint hard. Horizontal joints shall be tooled last. Joints shall be brushed to remove all loose and excess mortar. Mortar joints shall be finished as follows:

3.2.7.1 Flush Joints

Joints in concealed masonry surfaces and joints at electrical outlet boxes in wet areas shall be flush cut. Flush cut joints shall be made by cutting off the mortar flush with the face of the wall. Joints in unparged masonry walls below grade shall be pointed tight. Flush joints for architectural units, such as fluted units, shall completely fill both the head and bed joints.

3.2.7.2 Tooled Joints

Joints in exposed exterior and interior masonry surfaces shall be tooled slightly concave. Joints shall be tooled with a jointer slightly larger than the joint width so that complete contact is made along the edges of the unit. Tooling shall be performed so that the mortar is compressed and the joint surface is sealed. Jointer of sufficient length shall be used to obtain a straight and true mortar joint.

3.2.7.3 Door and Window Frame Joints

On the exposed interior side of exterior frames, joints between frames and abutting masonry walls shall be raked to a depth of 3/8 inch. On the exterior side of exterior frames, joints between frames and abutting masonry walls shall be raked to a depth of 3/8 inch.

3.2.8 Joint Widths

Joint widths shall be as follows:

3.2.8.1 Concrete Masonry Units

Concrete masonry units shall have 3/8 inch joints, except for prefaced concrete masonry units.

3.2.8.2 Prefaced Concrete Masonry Units

Prefaced concrete masonry units shall have a joint width of 3/8 inch wide on unfaced side and not less than 3/16 inch nor more than 1/4 inch wide on prefaced side.

3.2.8.3 Brick

Brick joint widths shall be the difference between the actual and nominal dimensions of the brick in either height or length. Brick expansion joint widths shall be as shown.

3.2.9 Embedded Items

Spaces around built-in items shall be filled with mortar. Openings around flush-mount electrical outlet boxes in wet locations shall be pointed with mortar. Anchors, ties, wall plugs, accessories, flashing, pipe sleeves and other items required to be built-in shall be embedded as the masonry work progresses. Anchors, ties and joint reinforcement shall be fully embedded in the mortar. Cells receiving anchor bolts and cells of the first course below bearing plates shall be filled with grout.

Install reglets and nailers for flashing and other related construction where they are shown to be built into masonry.

3.2.10 Unfinished Work

Unfinished work shall be stepped back for joining with new work. Toothing may be resorted to only when specifically approved. Loose mortar shall be removed and the exposed joints shall be thoroughly cleaned before laying new work.

3.2.11 Masonry Wall Intersections

Each course shall be masonry bonded at corners and elsewhere as shown. Masonry walls shall be anchored or tied together at corners and intersections with bond beam reinforcement and prefabricated corner or tee pieces of joint reinforcement as shown.

3.2.12 Partitions

Partitions shall be continuous from floor to underside of floor or roof deck where shown. Openings in firewalls around joists or other structural members shall be filled as indicated or approved. Interior partitions having 4 inch nominal thick units shall be tied to intersecting partitions of 4 inch units, 5 inches into partitions of 6 inch units, and 7 inches into partitions of 8 inch or thicker units. Cells within vertical plane of ties shall be filled solid with grout for full height of partition or solid masonry units may be used. Interior partitions having masonry walls over 4 inches thick shall be tied together with joint reinforcement. Partitions containing joint reinforcement shall be provided with prefabricated pieces at corners and intersections or partitions.

3.3 ANCHORED VENEER CONSTRUCTION

The inner and outer wythes shall be completely separated by a continuous airspace as shown on the drawings. Both the inner and the outer wythes shall be laid up together except when adjustable joint reinforcement assemblies are approved for use. When both wythes are not brought up together, through-wall flashings shall be protected from damage until they are fully enclosed in the wall. The airspace between the wythes shall be kept clear and free of mortar droppings by temporary wood strips laid on the wall ties and carefully lifted out before placing the next row of ties. A coarse gravel or drainage material shall be placed behind the weep holes in the cavity to a minimum depth of 4 inches of coarse aggregate or 10 inches of drainage material to keep mortar droppings from plugging the weep holes.

Anchors shall be spaced as specified in this Section under Article 3.16.

3.4 WEEP HOLES

Weep holes shall be provided not more than 24 inches on centers in mortar joints of the exterior wythe above wall flashing, over foundations, bond beams, and any other horizontal interruptions of the cavity. Weep holes shall be formed by placing short lengths of well-greased No. 10, 5/16 inch nominal diameter, braided cotton sash cord in the mortar and withdrawing the cords after the wall has been completed. Weep holes shall be kept free of mortar and other obstructions.

3.5 PREFACED CONCRETE MASONRY UNITS

Prefaced concrete masonry units shall be installed as specified for concrete masonry units and as required herein. Single-faced units may be installed through the wall where walls or partitions are indicated to have structural clay facing unit finish on one side only. The facing shall be used for dimensional and plane reference in the installation. Two-faced walls or partitions shall consist of two units bonded and tied together as specified for composite walls. Wainscots shall be of full courses to approximate as nearly as possible the height indicated, except that in no case shall the wainscots be lower than 2 inches below the specified height. Units shall be set level and true so that bases and walls will present true planes and surfaces free of waviness, offset, or other distortion. Joint reinforcing shall be placed not over 16 inches on center vertically.

3.6 MORTAR

Mortar shall be mixed in a mechanically operated mortar mixer for at least 3 minutes, but not more than 5 minutes. Measurement of ingredients for mortar shall be by volume. Ingredients not in containers, such as sand, shall be accurately measured by the use of measuring boxes. Water shall be mixed with the dry ingredients in sufficient amount to provide a workable mixture which will adhere to the vertical surfaces of masonry units. Mortar that has stiffened because of loss of water through evaporation shall be retempered by adding water to restore the proper consistency and workability. Mortar that has reached its initial set or that has not been

used within 1-1/2 hours after mixing shall be discarded.

3.7 REINFORCING STEEL

Reinforcement shall be cleaned of loose, flaky rust, scale, grease, mortar, grout, or other coating which might destroy or reduce its bond prior to placing grout. Bars with kinks or bends not shown on the drawings shall not be used. Reinforcement shall be placed prior to grouting. Unless otherwise indicated, vertical wall reinforcement shall extend to within 2 inches of tops of walls.

3.7.1 Positioning Bars

Vertical bars shall be accurately placed within the cells at the positions indicated on the drawings. A minimum clearance of 1/2 inch shall be maintained between the bars and masonry units. Minimum clearance between parallel bars shall be one diameter of the reinforcement. Vertical reinforcing may be held in place using bar positioners located near the ends of each bar and at intermediate intervals of not more than 192 diameters of the reinforcement. Column and pilaster ties shall be wired in position around the vertical steel. Ties shall be in contact with the vertical reinforcement and shall not be placed in horizontal bed joints.

3.7.2 Splices

Bars shall be lapped a minimum of 48 diameters of the reinforcement. Welded or mechanical connections shall develop at least 125 percent of the specified yield strength of the reinforcement.

3.8 JOINT REINFORCEMENT

Joint reinforcement shall be installed at 16 inches on center or as indicated, except at 8 inches on center in 4 inch CMU around interior of the three main Gymnasiums. Reinforcement shall be lapped not less than 8 inches. Prefabricated sections shall be installed at corners and wall intersections. The longitudinal wires of joint reinforcement shall be placed to provide not less than 5/8 inch cover to either face of the unit.

3.9 PLACING GROUT

Cells containing reinforcing bars shall be filled with grout. Hollow masonry units in walls or partitions supporting plumbing, heating, or other mechanical fixtures, voids at door and window jambs, and other indicated spaces shall be filled solid with grout. Cells under lintel bearings on each side of openings shall be filled solid with grout for full height of openings. Lintels, and bond beams shall be filled solid with grout. Units other than open end units may require grouting each course to preclude voids in the units. Grout not in place within 1-1/2 hours after water is first added to the batch shall be discarded. Sufficient time shall be allowed between grout lifts to preclude displacement or cracking of face shells of masonry units. If blowouts, flowouts, misalignment, or cracking of face shells should occur during construction, the wall shall be torn down and rebuilt.

3.9.1 Horizontal Grout Barriers

Grout barriers shall be embedded in mortar below cells of hollow units receiving grout.

3.9.2 Grout Holes and Cleanouts

3.9.2.1 Grout Holes

Grouting holes shall be provided in slabs, spandrel beams, and other in-place overhead construction. Holes shall be located over vertical reinforcing bars or as required to facilitate grout fill in bond beams. Additional openings spaced not more than 16 inches on centers shall be provided where grouting of all hollow unit masonry is indicated. Openings shall not be less than 4 inches in diameter or 3 by 4 inches in horizontal dimensions. Upon completion of grouting operations, grouting holes shall be plugged and finished to match surrounding surfaces.

3.9.2.2 Cleanouts for Hollow Unit Masonry Construction

Cleanout holes shall be provided at the bottom of every pour in cores containing vertical reinforcement when the height of the grout pour exceeds 5 feet. Where all cells are to be grouted, cleanout courses shall be constructed using bond beam units in an inverted position to permit cleaning of all cells. Cleanout holes shall be provided at a maximum spacing of 32 inches where all cells are to be filled with grout. A new series of cleanouts shall be established if grouting operations are stopped for more than 4 hours. Cleanouts shall not be less than 3 by 4 inch openings cut from one face shell. Manufacturer's standard cutout units may be used at the Contractor's option. Cleanout holes shall not be closed until masonry work, reinforcement, and final cleaning of the grout spaces have been completed and inspected. For walls which will be exposed to view, cleanout holes shall be closed in an approved manner to match surrounding masonry.

3.9.3 Grouting Equipment

3.9.3.1 Grout Pumps

Pumping through aluminum tubes will not be permitted. Pumps shall be operated to produce a continuous stream of grout without air pockets, segregation, or contamination. Upon completion of each day's pumping, waste materials and debris shall be removed from the equipment, and disposed of outside the masonry.

3.9.3.2 Vibrators

Internal vibrators shall maintain a speed of not less than 5,000 impulses per minute when submerged in the grout. At least one spare vibrator shall be maintained at the site at all times. Vibrators shall be applied at uniformly spaced points not further apart than the visible effectiveness of the machine. Duration of vibration shall be limited to time necessary to produce satisfactory consolidation without causing segregation.

3.9.4 Grout Placement

Masonry shall be laid to the top of a pour before placing grout. Grout shall not be placed in hollow unit masonry until mortar joints have set for at least 24 hours. Grout shall be placed using a hand bucket, concrete hopper, or grout pump to completely fill the grout spaces without segregation of the aggregates. Vibrators shall not be inserted into lower pours that are in a semi-solidified state. The height of grout pours and type of grout used shall be limited by the dimensions of grout spaces as indicated in Table III. Low-lift grout methods may be used on pours up to and including 5 feet in height. High-lift grout methods shall be used on pours exceeding 5 feet in height.

3.9.4.1 Low-Lift Method

Grout shall be placed at a rate that will not cause displacement of the masonry due to hydrostatic pressure of the grout. Mortar protruding more than 1/2 inch into the grout space shall be removed before beginning the grouting operation. Grout pours 12 inches or less in height shall be consolidated by mechanical vibration or by puddling. Grout pours over 12 inches in height shall be consolidated by mechanical vibration and reconsolidated by mechanical vibration after initial water loss and settlement has occurred. Vibrators shall not be inserted into lower pours that are in a semi-solidified state. Low-lift grout shall be used subject to the limitations of Table III.

3.9.4.2 High-Lift Method

Mortar droppings shall be cleaned from the bottom of the grout space and from reinforcing steel. Mortar protruding more than 1/4 inch into the grout space shall be removed by dislodging the projections with a rod or stick as the work progresses. Reinforcing, bolts, and embedded connections shall be rigidly held in position before grouting is started. CMU units shall not be pre-wetted. Grout, from the mixer to the point of deposit in the grout space shall be placed as rapidly as practical by pumping and placing methods which will prevent segregation of the mix and cause a minimum of grout splatter on reinforcing and masonry surfaces not being immediately encased in the grout lift. The individual lifts of grout shall be limited to 4 feet in height. The first lift of grout shall be placed to a uniform height within the pour section and vibrated thoroughly to fill all voids. This first vibration shall follow immediately behind the pouring of the grout using an approved mechanical vibrator. After a waiting period sufficient to permit the grout to become plastic, but before it has taken any set, the succeeding lift shall be poured and vibrated 12 to 18 inches into the preceding lift. If the placing of the succeeding lift is going to be delayed beyond the period of workability of the preceding, each lift shall be reconsolidated by reworking with a second vibrator as soon as the grout has taken its settlement shrinkage. The waiting, pouring, and reconsolidation steps shall be repeated until the top of the pour is reached. The top lift shall be reconsolidated after the required waiting period. The high-lift grouting of any section of wall shall be completed to the top of a pour in one working day unless a new series of cleanout holes is established and the resulting horizontal construction joint cleaned. High-lift grout shall be used subject to the

limitations in Table III.

TABLE III

POUR HEIGHT AND TYPE OF GROUT FOR VARIOUS GROUT SPACE DIMENSIONS

Maximum Grout Pour Height (feet) (3)	Grout Type	Grouting Procedure	Minimum Dimensions of the Total Clear Areas Within Grout Spaces and Cells (in.) (1,2) Hollow-unit Masonry
1	Fine	Low Lift	1-1/2 x 2
5	Fine	Low Lift	2 x 3
8	Fine	High Lift	2 x 3
12	Fine	High Lift	2-1/2 x 3
24	Fine	High Lift	3 x 3
1	Coarse	Low Lift	1-1/2 x 3
5	Coarse	Low Lift	2-1/2 x 3
8	Coarse	High Lift	3 x 3
12	Coarse	High Lift	3 x 3
24	Coarse	High Lift	3 x 4

Notes:

(1) The actual grout space or cell dimension must be larger than the sum of the following items:
a) The required minimum dimensions of total clear areas given in the table above;
b) The width of any mortar projections within the space;
c) The horizontal projections of the diameters of the horizontal reinforcing bars within a cross section of the grout space or cell.

(2) The minimum dimensions of the total clear areas shall be made up of one or more open areas, with at least one area being 3/4 inch or greater in width.

(3) Where only cells of hollow masonry units containing reinforcement are grouted, the maximum height of the pour shall not exceed the distance between horizontal bond beams.

3.10 BOND BEAMS

Bond beams shall be filled with grout and reinforced as indicated on the drawings. Grout barriers shall be installed under bond beam units to retain the grout as required. Reinforcement shall be continuous, including around corners, except through control joints or expansion joints, unless otherwise indicated on the drawings. Where splices are required for continuity, reinforcement shall be lapped 48 bar diameters. A minimum clearance of 1/2 inch shall be maintained between reinforcement and interior faces of units.

3.11 CONTROL JOINTS

Control joints shall be provided as indicated and shall be constructed in accordance with the details shown on the drawings. Sash jamb units shall have a 3/4 by 3/4 inch groove near the center at end of each unit. The vertical mortar joint at control joint locations shall be continuous, including through all bond beams. This shall be accomplished by utilizing half blocks in alternating courses on each side of the joint. The control joint key shall be interrupted in courses containing continuous bond beam steel. In single wythe exterior masonry walls, the exterior control joints shall be raked to a depth of 3/4 inch; backer rod and sealant shall be installed in accordance with Section 07900 JOINT SEALING. Exposed interior control joints shall be raked to a depth of 1/4 inch. Concealed control joints shall be flush cut.

3.12 BRICK EXPANSION JOINTS AND CONCRETE MASONRY VENEER JOINTS

Brick expansion joints and concrete masonry veneer joints shall be provided and constructed as shown on the drawings. Joints shall be kept free of mortar and other debris.

3.13 SHELF ANGLES

Shelf angles shall be adjusted as required to keep the masonry level and at the proper elevation. Shelf angles shall be galvanized. Shelf angles shall be provided in sections not longer than 10 feet and installed with a 1/4 inch gap between sections. Shelf angles shall be mitered and welded at building corners with each angle not shorter than 4 feet, unless limited by wall configuration.

3.14 LINTELS

3.14.1 Masonry Lintels

Masonry lintels shall be constructed with lintel units filled solid with grout in all courses and reinforced with a minimum of two No. 4 bars in the bottom course unless otherwise indicated on the drawings. Lintel reinforcement shall extend beyond each side of masonry opening 40 bar diameters or 24 inches, whichever is greater. Reinforcing bars shall be supported in place prior to grouting and shall be located 1/2 inch above the bottom inside surface of the lintel unit.

3.14.2 Steel Lintels

Steel lintels shall be as shown on the drawings. Lintels shall be set in a full bed of mortar with faces plumb and true. Steel lintels shall have a minimum bearing length of 8 inches unless otherwise indicated on the drawings.

3.15 CAST STONE ITEMS

3.15.1 SETTING OF CAST STONE

Cast Stone shall be set by experienced stone masons, accurately and in accordance with approved Shop and Setting Drawings. Unless otherwise noted,

every stone shall be set in a full bed of mortar with all vertical joints flushed full. Anchors and dowels shall be firmly placed and all anchor holes, dowel holes, and similar holes filled completely with mortar.

Anchors, dowels and other anchoring devices shall be furnished by stone setter as shown on approved Shop Drawings.

When setting with mortar, all stones not thoroughly wet shall be drenched with clear water just prior to setting.

After each stone has been set, joints shall be raked to a depth of 3/4 in. from the face for pointing. Face of each stone shall then be sponged off to remove any splashed mortar or mortar smears.

Only the ends of lugged sills, steps, and similar stones shall be embedded in mortar. Balance of joint shall be left open until pointing of stone work, then tuck pointed on face only to a depth of 3/4 in.

Copings, sills, lintels, and, in general, all cast stone areas either partially or totally horizontal, shall be set with unfilled vertical joints. The exterior vertical profile of these joints shall be packed with foam rod and after wetting the ends of the stone thoroughly fill the joint full from above with mortar to within 3/4 in. of top. After mortar has set, remove packing for pointing or sealant.

Stone shall be protected from splashing mortar or damage by other trades. Any foreign matter splashed on the stone shall be removed immediately.

3.15.2 PATCHING AND CLEANING OF CAST STONE

Repair of chipped or damaged Cast Stone shall be done only by mechanics skilled in this class of work, with materials and directions furnished by the manufacturer and according to his direction.

Before pointing, the face of all Cast Stone shall be scrubbed with a fibre brush, using soap powder and water and shall then be thoroughly rinsed with clean running water. Any mortar on the face of the Cast Stone shall be removed. No acids or prepared cleaners shall be used without the approval of the Cast Stone Manufacturer.

3.15.3 POINTING AND CAULKING OF CAST STONE

When ready for pointing, the joints shall be dampened and carefully pointed to a slight concave unless otherwise specified by the Architect. No pointing shall be done in freezing weather or in locations exposed to hot sun, unless properly protected.

Head joints in copings and similar stones shall be caulked with a non-shrink waterproof joint sealant used in accordance with the manufacturer's instructions.

3.15.4 INSPECTION AND ACCEPTANCE OF CAST STONE

Generally, acceptance of Cast Stone finish shall require that color and

texture be equal to the approved sample when viewed in good typical lighting at a distance of 10 ft.

Cast Stone shall show no obvious repairs, or imperfections other than minimal color variations when viewed with the unaided eye at a 20 ft. distance.

3.16 ANCHORAGE OF MASONRY VENEER

3.16.1 General

Space wall ties to comply with code and manufacturer's recommendations. Provide at least one tie for every 2 square feet of wall area unless more frequent spacing is indicated or required. At control Joints in the veneer, provide ties within 8 inches of each side of the joint and at 16 inches O.C. vertically.

3.16.2 Anchorage to Concrete

Anchorage of masonry to the face of concrete columns, beams, or walls shall be with dovetail anchors spaced not over 16 inches on centers vertically and 24 inches on center horizontally.

3.16.3 Anchorage to Structural Steel

Masonry shall be anchored to vertical structural steel framing with adjustable steel wire anchors spaced not over 16 inches on centers vertically, and if applicable, not over 24 inches on centers horizontally. Anchors shall be designed to allow for movement of structural steel.

3.16.4 Anchorage to Wall Framing

Anchor masonry veneers to wall framing with seismic masonry-veneer anchors to comply with the following requirements:

1. Fasten each anchor section through sheathing to wall framing with two metal fasteners of type indicated.
2. Locate anchor sections to allow maximum vertical differential movement of ties up and down.
3. Space anchors as indicated, but not more than 18 inches (458 mm) o.c. vertically and 24 inches (610 mm) o.c. horizontally, with not less than 1 anchor for each 2 sq. ft. (0.2 sq. m) of wall area. Install additional anchors within 12 inches (305 mm) of openings and at intervals, not exceeding 8 inches (203 mm), around the perimeter.

3.16.5 Anchorage to Masonry Back-Up

Anchor masonry veneers to concrete masonry backup with seismic masonry-veneer anchors to comply with the following requirements:

1. Install each pintle tie section to eye section that is connected to horizontal joint reinforcing at concrete masonry backup.
2. Space anchors as indicated, but not more than 18 inches (458 mm)

o.c. vertically and 24 inches (610 mm) o.c. horizontally, with not less than 1 anchor for each 2 sq. ft. (0.2 sq. m) of wall area. Install additional anchors within 12 inches (305 mm) of openings and at intervals, not exceeding 8 inches (203 mm), around the perimeter.

3.17 INSULATION

Anchored veneer walls shall be insulated, where shown, by installing board-type insulation on the cavity side of the inner wythe. Board type insulation shall be applied directly to the masonry or thru-wall flashing with adhesive. Insulation shall be neatly fitted between obstructions without impaling of insulation on ties or anchors. The insulation shall be applied in parallel courses with vertical joints breaking midway over the course below and shall be applied in moderate contact with adjoining units without forcing, and shall be cut to fit neatly against adjoining surfaces.

3.18 POINTING AND CLEANING

After mortar joints have attained their initial set, but prior to hardening, mortar and grout daubs or splashings shall be completely removed from masonry-unit surfaces that will be exposed or painted. Before completion of the work, defects in joints of masonry to be exposed or painted shall be raked out as necessary, filled with mortar, and tooled to match existing joints. Immediately after grout work is completed, scum and stains which have percolated through the masonry work shall be removed using a high pressure stream of water and a stiff bristled brush. Masonry surfaces shall not be cleaned, other than removing excess surface mortar, until mortar in joints has hardened. Masonry surfaces shall be left clean, free of mortar daubs, dirt, stain, and discoloration, including scum from cleaning operations, and with tight mortar joints throughout. Metal tools and metal brushes shall not be used for cleaning.

3.18.1 Concrete Masonry Unit and Concrete Brick Surfaces

Exposed concrete masonry unit and concrete brick surfaces shall be dry-brushed at the end of each day's work and after any required pointing, using stiff-fiber bristled brushes.

3.18.2 Clay Brick Surfaces

Exposed clay brick masonry surfaces shall be cleaned as necessary to obtain surfaces free of stain, dirt, mortar and grout daubs, efflorescence, and discoloration or scum from cleaning operations. After cleaning, the sample panel of similar material shall be examined for discoloration or stain as a result of cleaning. If the sample panel is discolored or stained, the method of cleaning shall be changed to assure that the masonry surfaces in the structure will not be adversely affected. The exposed masonry surfaces shall be water-soaked and then cleaned with a solution proportioned 1/2 cup trisodium phosphate and 1/2 cup laundry detergent to one gallon of water or cleaned with a proprietary masonry cleaning agent specifically recommended for the color and texture by the clay products manufacturer. The solution shall be applied with stiff fiber brushes, followed

immediately by thorough rinsing with clean water. Proprietary cleaning agents shall be used in conformance with the cleaning product manufacturer's printed recommendations. Efflorescence shall be removed in conformance with the brick manufacturer's recommendations.

3.18.3 Prefaced Concrete Masonry Unit Surfaces

Prefaced concrete masonry unit surfaces shall be cleaned with soap powder and clean water applied with stiff fiber brushes. Excess mortar shall be removed with wood paddles. Metal cleaning tools, metal brushes, abrasive powders, and acid solutions shall not be used. At the completion of cleaning operations, the surfaces shall be rinsed with clean water. In areas of traffic within the building, a barricade of wood supported by framing lumber shall be erected to protect the units. In other areas, a heavy kraft-type building paper shall be taped over the units until final acceptance.

3.19 BEARING PLATES

Bearing plates for beams, joists, joist girders and similar structural members shall be set to the proper line and elevation with damp-pack bedding mortar, except where non-shrink grout is required. Bedding mortar and non-shrink grout shall be as specified in Section 03300CAST-IN-PLACE STRUCTURAL CONCRETE.

3.20 PROTECTION

Facing materials shall be protected against staining. Top of walls shall be covered with nonstaining waterproof covering or membrane when work is not in progress. Covering of the top of the unfinished walls shall continue until the wall is waterproofed with a complete roof or parapet system. Covering shall extend a minimum of 2 feet down on each side of the wall and shall be held securely in place. Before starting or resuming, top surface of masonry in place shall be cleaned of loose mortar and foreign material.

3.21 TEST REPORTS

3.21.1 Field Testing of Mortar

At least three specimens of mortar shall be taken each day. A layer of mortar 1/2 to 5/8 inch thick shall be spread on the masonry units and allowed to stand for one minute. The specimens shall then be prepared and tested for compressive strength in accordance with ASTM C 780.

3.21.2 Field Testing of Grout

Field sampling and testing of grout shall be in accordance with the applicable provisions of ASTM C 1019. A minimum of three specimens of grout per day shall be sampled and tested. Each specimen shall have a minimum ultimate compressive strength of 2500 psi at 28 days.

3.21.3 Efflorescence Test

Brick which will be exposed to weathering shall be tested for efflorescence. Tests shall be scheduled far enough in advance of starting masonry work to permit retesting if necessary. Sampling and testing shall conform to the applicable provisions of ASTM C 67. Units meeting the definition of "effloresced" will be subject to rejection.

3.21.4 Prism Tests

At least one prism test sample shall be made for each 5,000 square feet of wall. Three prisms shall be used in each sample. Prisms shall be tested in accordance with ASTM E 447. Seven-day tests may be used provided the relationship between the 7- and 28-day strengths of the masonry is established by the tests of the materials used. Compressive strength shall not be less than 1,500 psi at 28 days. If the compressive strength of any prism falls below the specified value by more than 200 psi, steps shall be taken to assure that the load-carrying capacity of the structure is not jeopardized. If the likelihood of low-strength masonry is confirmed and computations indicate that the load-carrying capacity may have been significantly reduced, tests of cores drilled, or prisms sawed, from the area in question may be required. In such case, three specimens shall be taken for each prism test more than 200 psi below the specified value. Masonry in the area in question shall be considered structurally adequate if the average compressive strength of three specimens is equal to at least 85 percent of the specified value, and if the compressive strength of no single specimen is less than 75 percent of the specified value. Additional testing of specimens extracted from locations represented by erratic core or prism strength test results shall be permitted.

-- End of Section --

SECTION 04900

RESTORATION AND CLEANING OF MASONRY IN HISTORIC STRUCTURES

PART 1 GENERAL

1.1 REFERENCES

The publications listed below form a part of this specification to the extent referenced. The publications are referred to in the text by basic designation only.

ACI INTERNATIONAL (ACI)

ACI Compilation 20	(1992) Repair and Rehabilitation II

AMERICAN CONFERENCE OF GOVERNMENTAL INDUSTRIAL HYGENISTS (ACGIH)

ACGIH-02	(1996) Threshold Limit Values for Chemical Substances and Physical Agents Biological Exposure Indices

AMERICAN SOCIETY FOR TESTING AND MATERIALS (ASTM)

ASTM D 3399	(1981; R 1995) General-Purpose Synthetic Detergent Liquid

BRICK INSTITUTE OF AMERICA (BIA)

BIA Tech Note 20 Rev II	(1990) Cleaning Brick Masonry

1.2 GENERAL REQUIREMENTS

Work shall be done in conformance with ACI Compilation 20. Non-historic masonry work, including materials, procedures, and requirements shall conform to Section 04200 MASONRY, except as otherwise specified herein.

Work of this Section includes cleaning selected areas of the existing interior masonry walls at Building Segments "A" and "B", and the cleaning of selected areas of the exterior walls of Building Segment "A". Existing masonry includes existing brick, mortar, and stone. Refer to Drawings for the extent of work required.

Stone Crest: A large stone crest, was previously salvaged during the demolition of the existing structures. This stone crest shall be installed into the new work. This stone crest shall be cleaned as part of the work of this Section prior to installation, and shall be included in the Unit Price work as specified in Section 01025, MEASUREMENT AND PAYMENT.

1.2.1 Cleaning and Restoration Methods

The cleaning and restoration methods, and materials selected for a specific structure, shall be submitted for approval before work starts, and shall take into account the total construction system of the building to be worked upon, including different masonry and mortar materials, as well as non-masonry elements which may be affected by the work.

1.2.2 Ionic Cleaners

Ionic chemical cleaners shall be used as specified, in accordance with the manufacturer's instructions, and only upon the direction of the Contracting Officer. Ionic cleaners shall be used only after gentler cleaning methods have been determined to be ineffective through the use of test panels.

1.3 SUBMITTALS

Government approval is required for submittals with a "GA" designation; submittals having an "FIO" designation are for information only. The following shall be submitted in accordance with Section 01330 SUBMITTAL PROCEDURES:

SD-01 Data

Cleaning and Restoration Methods; GA.

Descriptive narrative in cleaning and repair methods to be employed in the work. Description shall be organized in sequence from preparation through completion of the work. Schedule showing estimated time, in calendar days, for completion of each phase of the work shall be included.

Qualifications; FIO.

Documentation showing Contractor's experience of 5 consecutive years in masonry restoration, plus a list of similar jobs to the one specified herein.

SD-13 Certificates

Materials; FIO.

Certificates of compliance attesting that the materials, equipment, and cleaning agents (chemicals, detergents, etc.) to be used in the work meet the specified requirements.

1.4 QUALIFICATIONS

The Contractor shall provide qualified workers, trained and experienced in restoration of masonry in historic structures, and shall furnish documentation of 5 consecutive years of work of this type. A list of similar jobs shall be provided identifying when, where, and for whom the work was done.

1.5 EQUIPMENT AND TECHNIQUES DEMONSTRATION

Equipment and techniques of operation shall be demonstrated in an approved

location and shall be subject to approval. Dependable and sufficient equipment, appropriate and adequate to accomplish the work specified, shall be assembled at the work site in sufficient lead time before the start of the work to permit inspection, calibration of weighing and measuring devices, adjustment of parts, and the making of any repairs that may be required. The equipment shall be maintained in good working condition throughout the project.

1.5.1 Cleaning Equipment

Cleaning equipment shall not cause staining, erosion, marring, or other damage or changes in the appearance of the surfaces to be cleaned.

1.5.1.1 Sandblasting

Sandblasting equipment will not be allowed for cleaning masonry surfaces.

1.5.1.2 Water Blasting/Pressure Washing

Water blasting equipment shall include a trailer-mounted water tank, pumps, high-pressure hose, wand with safety release cutoff control, nozzle, and auxiliary water re-supply equipment. The equipment shall not be operated at a pressure which will cause etching or other damage to the masonry surface or mortar joints. The equipment shall be operated at a discharge capacity of 55 to 500 psi and 2.5 to 3 gpm for general surface cleaning operations. The water tank and auxiliary re-supply equipment shall be of sufficient capacity to permit continuous operations. The Contractor shall provide protective covers and barriers as required to prevent over-spray onto adjacent surfaces.

All water blasting/pressure washing shall be included in the work of Item 0001 and shall not be included in the Unit Price work as specified in Section 01025, MEASUREMENT AND PAYMENT.

1.5.2 Finishing and Texturing Equipment

Equipment and hand tools used for placing, finishing and texturing masonry and mortar shall be commercially available and commonly used in masonry construction and repair. Surface grinders, impact tools, and other equipment shall conform to the specified requirements, except as specifically required by the type of finish and texture.

1.5.3 Compressed Air Supplies

Compressed air equipment shall deliver clean, oil and moisture free compressed air at the surface to be cleaned. The compressed air line shall have at least two in-line air filters to remove oil and moisture from the air supply. The compressed air supply shall be tested during each shift for the presence of oil and moisture.

1.5.4 Material Handling and Associated Equipment

1.5.4.1 Mixing, Transporting, and Placing Job Materials

Equipment used for mixing, transporting, placing, and confining masonry and mortar placements shall be capable of satisfactorily mixing material and supporting placement operations in an uninterrupted manner. Defects and deficiencies in operation or capacity shall be resolved prior to use in the work. Equipment used for mixing, conveying, and placing of materials shall be clean, free of old materials and contaminants, and shall conform to the material manufacturer's recommendations.

1.5.4.2 Associated Equipment

Associated equipment such as mixer timing equipment, valves, pressure gauges, pressure hoses, other hardware, and tools shall be provided as required to ensure a continuous supply of material and operation control.

1.6 SAMPLE MASONRY CLEANING

Sample masonry cleaning areas shall be required before proceeding with cleaning work. Sample masonry cleaning shall be included in the work of Item 0001 and shall not be included in the Unit Price work as specified in Section 01025, MEASUREMENT AND PAYMENT.

1.7 STORAGE OF MATERIALS

Materials shall be stored in weathertight structures which will exclude moisture and contaminants. Cement shall be furnished in suitable bags used for packaging cements. Labeling of packages shall clearly define contents, manufacturer, and batch identification. Detergents, masonry cleaners, paint removers, solvents, epoxies and other chemicals used for masonry cleaning shall be in sealed containers that legibly show the designated name, formula or specification number, quantity, date of manufacture, manufacturer's formulation number, manufacturer's directions including any warnings and special precautions, and name of manufacturer. Accessories shall be stored avoiding contamination and deterioration. Admixtures which have been in storage onsite for six months or longer, or which have been subjected to freezing, shall not be used unless retested and proven to meet the specified requirements.

1.8 SAFETY AND HEALTH

Work shall comply with applicable federal, state, and local laws and regulations, and with the ACCIDENT PREVENTION PLAN, including the Activity Hazard Analysis, specified in the CONTRACT CLAUSES. The Activity Hazard Analysis shall include analyses of the potential impact of cleaning operations on personnel and on others involved in and adjacent to the work zone.

1.8.1 Worker Exposures

Exposure of workers to chemical substances shall not exceed the limits established by ACGIH-02, or those required by a more stringent applicable regulation.

1.8.2 Training

Workers having access to an affected work area shall be informed of the contents of the applicable material safety data sheets, of potential health and safety hazard, and of protective controls associated with materials used on the project. An affected work area is one which may receive dust, mists, and odors from the surface preparation operations. Workers involved in masonry cleaning shall be trained in the safe handling and application, and the exposure limit, of each material to be used in the project. Personnel having a need to use respirators and masks shall be instructed in the use and maintenance of such equipment.

1.8.3 Coordination

Work shall be coordinated to minimize exposure of building occupants, other Contractor personnel, and visitors to mists and odors from surface preparation, cleaning, and repair operations.

1.9 PROTECTION

Persons, motor vehicles, adjacent surfaces, surrounding buildings, equipment, and landscape materials shall be protected from chemicals used and runoff from cleaning and paint removal operations. Temporary protection covers, which shall remain in operation during the course of the work, shall be erected over pedestrian walkways and at personnel and vehicular points of entrance and exit.

1.9.1 Interior Protection

The interior of buildings shall be protected from the cleaning, and repair operations at all times.

1.9.2 Environmental Protection

The work shall comply with the requirements of Sections 01410ENVIRONMENT PROTECTION and 02090 LEAD-BASED PAINT (LBP) ABATEMENT AND DISPOSAL.

1.10 WARRANTIES

1.10.1 Cleaning Warranty

Cleaning procedures shall be warranted for a period of two years against harm to substrate (masonry and mortar) or to adjacent materials including, but not limited to, discoloration of substrate from improper procedures or usage, chemical damage from inadequate rinse procedures, and abrasive damage from improper procedures.

1.11 MEASUREMENT AND PAYMENT

Sample masonry cleaning and water blasting/pressure washing shall be included in the work of Item 0001 and shall not be included in the Unit Price work as specified in Section 01025, MEASUREMENT AND PAYMENT.

Other cleaning of masonry shall be measured and paid for as specified in Section 01025, MEASUREMENT AND PAYMENT.

PART 2 PRODUCTS

2.1 MATERIALS

Materials, physical and chemical properties, and composition of masonry and mortar used in renovation work shall match that of original existing masonry and mortar to be repaired, unless samples and testing determine that existing mixtures and materials are faulty or non-performing.

2.2 CLEANING MATERIALS

2.2.1 Paint Removers

Chemical paint removers shall be manufacturer's water soluble, low toxicity products, effective for removal of paint on masonry without altering, damaging, or discoloring the masonry surface.

2.2.2 Detergent Cleaners

Detergent cleaners shall be in accordance with ASTM D 3399.

2.2.3 Ionic Cleaners

2.2.3.1 Alkaline Prewash Cleaner

Alkaline prewash cleaners shall be as recommended by the manufacturer.

2.2.3.2 One-Part Masonry Cleaner

One-part masonry cleaners shall be the standard, acid formulation recommended by the manufacturer.

2.2.3.3 Two-Part Limestone Cleaner

Two-part limestone cleaners shall be manufacturer's standard, two-part masonry cleaning system consisting of an alkaline prewash cleaner followed by acidic afterwash rinse.

2.2.3.4 Standard Strength Acidic Cleaner

Acidic cleaners shall be manufacturer's standard strength, acidic masonry restoration cleaner composed of hydrofluoric acid blended with other acids and combined with special wetting systems and inhibitors.

2.2.3.5 Extra Strength Acidic Cleaner

Masonry restoration extra strength acidic cleaners shall be as recommended by the manufacturer.

2.2.4 Liquid Strippable Masking Agent

Liquid strippable masking agent shall be manufacturer's standard liquid, film-forming, strippable masking material for protecting glass, metal, and polished stone surfaces from the damaging effect of acidic and alkaline

masonry cleaners.

2.2.5 Spray Equipment

Spray equipment for chemical cleaners shall be low-pressure tanks or chemical pumps suitable for chemical cleaner indicated, and shall be equipped with stainless steel, cone-shaped spray-tip. Spray equipment for water shall disperse water through a fan-shaped spray tip at an angle of not less than 15 degrees. Spray equipment shall deliver water at a pressure not greater than 500 psi and at a volume between 2.5 and 3 gpm. Spray equipment for heated water shall be capable of maintaining temperature, at flow rates indicated, between 140 and 180 degrees F.

2.2.6 Cleaning Implements

Brushes shall have natural or nylon fiber bristles only. Wire brushes shall not be used. Scrapers and application paddles shall be made of wood with rounded edges. Metallic tools shall not be used.

2.2.7 Water

Potable water shall be obtained from a local source and shall be filtered to remove minerals resulting in a neutral ph, prior to application. Backflow prevention devices shall be provided at the point of connection to the water supply.

PART 3 EXECUTION

3.1 MASONRY CLEANING

Historic materials shall not be damaged or marred in the process of cleaning. Cleaning shall conform to BIA Tech Note 20 Rev II. Open joints shall be temporarily caulked or otherwise protected to prevent water and cleaner intrusion into the interior of the structure from pressure spraying. Non-masonry materials and severely deteriorated masonry shall be protected by approved methods prior to initiation of cleaning operations. Masonry cleaning shall remove all organic and inorganic contaminants from the surface and pores of the substrate, returning the masonry to its natural color. Surfaces shall be evenly cleaned with no evidence of streaking or bleaching. The cleaning process shall not affect the density, porosity, or color of the masonry or mortar. Cleaned masonry shall have a neutral ph. Methods used for cleaning historic masonry shall be the gentlest possible to achieve the desired results. Test patches shall be made to determine a satisfactory cleaning result. Cleaning shall proceed in an orderly manner, working from top to bottom of each 8 ft. width and from one end of each elevation to the other. Cleaning shall be performed in a manner which results in uniform coverage of all surfaces, including corners, moldings, interstices and which produces an even effect without streaking or damage to masonry. The cleaning materials, equipment, and methods shall not result in staining, erosion, marring, or other damage to the surfaces of the structure. Following an initial inspection and evaluation of the structure and surfaces, the structure shall be given a surface cleaning. The surface cleaning shall be completed prior to start of repair work, and sampling and testing of mortars. The cleaning of

indicated areas shall provide for the complete cleaning of the indicated interior and exterior masonry surfaces of the structures, removing all traces of dirt, paint and other contaminants. The cleaning shall provide a clean masonry surface to allow determination of the masonry's color and shades, finish and texture, and other properties. Following completion of the surface cleaning of the structure (or side of structure) the masonry shall be dried prior to the start of any repair work. The following sequence of methods shall be used to determine the least aggressive, effective cleaning method:

1. Water with brushes.
2. Water with mild detergent.
3. Water with stronger detergent.
4. Water with stronger detergent plus ammonia.
5. Water with stronger detergent plus vinegar (not to be used on calcareous masonry).
6. Stronger chemical cleaners, to be used only if any of the above methods is determined to be ineffective by the Contracting Officer.

3.1.1 Project Conditions

Masonry surfaces shall be cleaned only when air temperatures are above 40 degrees F and will remain so until masonry has dried out, but for not less than 7 days after completion of the work.

3.1.2 Chemical Cleaners

Acidic chemical cleaners shall not be used on limestone, marble, concrete and other calcareous (calcium containing) masonry materials. If chemical cleaners are used on such materials, they shall be alkaline based and utilized with neutralizing afterwashes.

3.1.3 Sample Masonry Cleaning

Sample masonry cleaning shall be provided at four (4) locations in the existing buildings as selected by the Contracting Officer. The areas shall be selected to provide the range of conditions and materials expected to be encountered as a part of the work. At each of the areas selected the following cleaning shall be provided:

1. A rectangular area 12 feet wide by 8 feet high shall be cleaned with water and brushes.
2. A rectangular area within the area noted above 10 feet wide by 8 feet high shall be cleaned with water and mild detergent soap.
3. A rectangular area within the areas noted above 8 feet wide by 8 feet high shall be cleaned with water and stronger detergent.
4. A rectangular area within the areas noted above 6 feet wide by 8 feet high shall be cleaned with water and stronger detergent plus vinegar, except vinegar shall not be used on calcareous masonry.
5. Rectangular areas within the areas noted above 4 feet wide and 4 feet high shall be cleaned with each type of ionic cleaner specified.

The Contracting Officer shall review the sample masonry cleaning areas

between each type of cleaning noted above after the area has dried for not less than 48 hours. After cleaning effectiveness has been determined and acceptable results obtained, the masonry cleaning of similar areas shall proceed in the sequence and with the methods accepted by the Contracting Officer.

3.1.4 Paint Removal

All painted surfaces shall be assumed to be painted with lead-based paints. Paint and other coatings shall be removed from masonry surfaces in areas indicated prior to general cleaning. Masonry shall not be damaged or marred in the process of paint removal. Areas where paint is to be removed shall first be cleaned with water and detergent solution to remove surface dirt, rinsed, and allowed to dry. Chemical paint removers shall be applied in accordance with manufacturer's instructions. Surrounding painted surfaces to remain intact shall be protected from exposure to chemical paint removers to avoid damage. Paint that is to be removed shall be assumed to contain lead and shall be removed in accordance with Section 02090 LEAD BASED PAINT (LBP) ABATEMENT AND DISPOSAL.

3.1.5 Water Cleaning

3.1.5.1 Pressure Spraying

Water shall be spray applied to masonry surfaces to comply with requirements indicated by test patches for location, purpose, water temperature, pressure, volume, and equipment. Unless otherwise indicated, the surface washing shall be done with clean, low pressure water (pressure of less than 55 psi and 2.5 to 3 gpm discharge) and the spray nozzle shall not be held less than 12 inches from surface of masonry. Water shall be applied side to side in overlapping bands to produce uniform coverage.

3.1.5.2 Handscrubbing

Pre-wetted surfaces shall be scrubbed using hand-held natural bristle or nylon brushes. Wire brushes shall not be used. Surfaces to be cleaned shall be scrubbed to remove surface contaminants.

3.1.5.3 Rinsing

Scrubbed surfaces shall be rinsed clean of all contaminants and cleaning solutions with water in a low-to-moderate pressure spray, working upwards from bottom to top of each treated area. The rinsing cycle shall remove all traces of contaminants and cleaning solutions.

3.1.6 Chemical Cleaning

Chemical cleaning of historic masonry shall use the gentlest means possible to achieve the desired result as determined by test patches. Chemical cleaning shall be the use of any product in addition to water, including detergents, ammonia, vinegar, and bleach. Cleaning shall proceed in an orderly manner, working from top to bottom of each scaffold width and from one end of each elevation to the other. Cleaning shall result in uniform coverage of all surfaces, including corners, moldings, interstices and

shall produce an even effect without streaking or damage to masonry. Chemical cleaners shall not be applied to the same masonry surfaces more than twice.

3.1.6.1 Surface Prewetting

Masonry surfaces to be cleaned with chemical cleaners shall be wetted with water using a low pressure spray before application of any cleaner.

3.1.6.2 Acidic Chemical Cleaning

Acidic chemical cleaners shall be applied according to manufacturer's instructions. Acidic chemical cleaners shall not be applied to masonry with high calcium content (e.g. marble, limestone). Acidic cleaners shall be applied to masonry surfaces by low pressure spray 50 psi max., roller, or brush. Cleaner shall remain on masonry surface for the time period recommended by manufacturer. Manual scrubbing by brushes shall be employed as indicated by test patches for the specific location. Cleaned surfaces shall be rinsed with a low-to-moderate pressure spray of water to remove all traces of chemical cleaner.

3.1.6.3 Alkaline Chemical Cleaning - Prewash Phase

Alkaline chemical cleaners shall be applied according to manufacturer's instructions. Alkaline cleaners shall be applied to masonry surfaces by low pressure spray 50 psi max., roller, or brush. Cleaner shall remain on masonry surface for the time period recommended by the manufacturer. Manual scrubbing by brushes shall be employed as indicated by test patches for the specific location. Cleaned surfaces shall be rinsed with a low-to-moderate pressure spray of water.

3.1.6.4 Alkaline Chemical Cleaning - Afterwash Phase

Immediately after rinsing of alkaline cleaned surfaces, a neutralizing afterwash shall be applied to the cleaned masonry areas. Neutralizing afterwash shall be applied according to manufacturer's instructions. Neutralizing afterwash shall be applied to masonry surfaces by low pressure spray 50 psi max., roller, or brush. Afterwash shall remain on masonry surface for the time period recommended by manufacturer. Cleaned surfaces shall be rinsed with a low-to-moderate pressure spray of water to remove all traces of chemical cleaners.

3.1.6.5 ph Testing

Masonry surfaces which have been chemically cleaned shall be ph tested using ph monitoring pencils or papers. Chemically cleaned masonry shall be rinsed of all chemical residues until a neutral ph (7) reading is obtained from the masonry surface.

3.2 FINAL CLEANING

No sooner than 72 hours after completion of the repair work and after joints are sealed, faces and other exposed surfaces of masonry shall be washed down with water applied with a soft bristle brush, then rinsed with

clean water. Discolorations which cannot be removed by these procedures, shall be considered defective work. Cleaning work shall be done when temperature and humidity conditions allow the surfaces to dry rapidly. Adjacent surfaces shall be protected from damage during cleaning operations.

3.3 PROTECTION OF WORK

Work shall be protected against damage from subsequent operations.

3.4 DEFECTIVE WORK

Defective work shall be repaired or replaced, as directed, using approved procedures.

3.5 FINAL INSPECTION

Following completion of the work, the structure shall be inspected for damage, staining, and other distresses. The patches shall be inspected for cracking, crazing, delamination, unsoundness, staining and other defects. The finish, texture, color and shade, and surface tolerances of the patches shall be inspected to verify that all requirements have been met. Surfaces exhibiting defects shall be repaired as directed.

-- End of Section --

SECTION 05090

WELDING, STRUCTURAL

PART 1 GENERAL

1.1 REFERENCES

The publications listed below form a part of this specification to the extent referenced. The publications are referred to in the text by basic designation only.

AMERICAN INSTITUTE OF STEEL CONSTRUCTION (AISC)

AISC-01	(1989) Manual of Steel Construction Allowable Stress Design (ASD Manual)
AISC-02	(1992) Manual of Steel Construction Vol II: Connections (ASD/LRFD Vol II)
AISC-03	(1995) Manual of Steel Construction Load & Resistance Factor Design, Vol I: Structural Members, Specifications & Codes (LRFD Vol I)
AISC-04	(1995) Manual of Steel Construction Load & Resistance Factor Design, Vol II: Connections (LRFD Vol II)

AMERICAN SOCIETY FOR NONDESTRUCTIVE TESTING (ASNT)

ASNT-01	(1996) Recommended Practice SNT-TC-1A

AMERICAN WELDING SOCIETY (AWS)

AWS A2.4	(1998) Standard Symbols for Welding, Brazing and Nondestructive Examination
AWS A3.0	(1994) Standard Welding Terms and Definitions
AWS D1.1	(2000) Structural Welding Code - Steel
AWS Z49.1	(1999) Safety in Welding and Cutting and Allied Processes

1.2 DEFINITIONS

Definitions of welding terms shall be in accordance with AWS A3.0.

1.3 GENERAL REQUIREMENTS

The design of welded connections shall conform to AISC-01 and AISC-02, or: to AISC-03 and AISC-04 (but not both), consistent with AISC Standards used for the work of Section 05120, unless otherwise indicated or specified. Material with welds will not be accepted unless the welding is specified or indicated on the drawings or otherwise approved. Welding shall be as specified in this section, except where additional requirements are shown on the drawings or are specified in other sections. Welding shall not be started until welding procedures, welders, welding operators, and tackers have been qualified and the submittals approved by the Contracting Officer. Qualification testing shall be performed at or near the work site. Each Contractor performing welding shall maintain records of the test results obtained in welding procedure, welder, welding operator, and tacker performance qualifications.

1.4 SUBMITTALS

Government approval is required for submittals with a "GA" designation; submittals having an "FIO" designation are for information only. The following shall be submitted in accordance with Section 01330 SUBMITTAL PROCEDURES:

SD-08 Statements

Welding Procedure Qualifications; GA.

Welder, Welding Operator, and Tacker Qualification; GA.

Inspector Qualification; GA.

Copies of the welding procedure specifications; the procedure qualification test records; and the welder, welding operator, or tacker qualification test records.

SD-18 Records

Quality Control; FIO.

A quality assurance plan and records of tests and inspections.

1.5 WELDING PROCEDURE QUALIFICATIONS

Except for prequalified (per AWS D1.1) and previously qualified procedures, each Contractor performing welding shall record in detail and shall qualify the welding procedure specification for any welding procedure followed in the fabrication of weldments. Qualification of welding procedures shall conform to AWS D1.1 and to the specifications in this section and in Section 05120. Copies of the welding procedure specification and the results of the procedure qualification test for each type of welding which requires procedure qualification shall be submitted for approval. Approval of any procedure, however, will not relieve the Contractor of the sole responsibility for producing a finished structure meeting all the requirements of these specifications. This information shall be submitted

on the forms in Appendix E of AWS D1.1. Welding procedure specifications shall be individually identified and shall be referenced on the detail drawings and erection drawings, or shall be suitably keyed to the contract drawings. In case of conflict between this specification and AWS D1.1, this specification governs.

1.5.1 Previous Qualifications

Welding procedures previously qualified by test may be accepted for this contract without requalification if the following conditions are met:

a. Testing was performed by an approved testing laboratory, technical consultant, or the Contractor's approved quality control organization.

b. The qualified welding procedure conforms to the requirements of this specification and is applicable to welding conditions encountered under this contract.

c. The welder, welding operator, and tacker qualification tests conform to the requirements of this specification and are applicable to welding conditions encountered under this contract.

1.5.2 Prequalified Procedures

Welding procedures which are considered prequalified as specified in AWS D1.1 will be accepted without further qualification. The Contractor shall submit for approval a listing or an annotated drawing to indicate the joints not prequalified. Procedure qualification shall be required for these joints.

1.5.3 Retests

If welding procedure fails to meet the requirements of AWS D1.1, the procedure specification shall be revised and requalified, or at the Contractor's option, welding procedure may be retested in accordance with AWS D1.1. If the welding procedure is qualified through retesting, all test results, including those of test welds that failed to meet the requirements, shall be submitted with the welding procedure.

1.6 WELDER, WELDING OPERATOR, AND TACKER QUALIFICATION

Each welder, welding operator, and tacker assigned to work on this contract shall be qualified in accordance with the applicable requirements of AWS D1.1 and as specified in this section. Welders, welding operators, and tackers who make acceptable procedure qualification test welds will be considered qualified for the welding procedure used.

1.6.1 Previous Qualifications

At the discretion of the Contracting Officer, welders, welding operators, and tackers qualified by test within the previous 6 months may be accepted for this contract without requalification if all the following conditions are met:

a. Copies of the welding procedure specifications, the procedure qualification test records, and the welder, welding operator, and tacker qualification test records are submitted and approved in accordance with the specified requirements for detail drawings.

b. Testing was performed by an approved testing laboratory, technical consultant, or the Contractor's approved quality control organization.

c. The previously qualified welding procedure conforms to the requirements of this specification and is applicable to welding conditions encountered under this contract.

d. The welder, welding operator, and tacker qualification tests conform to the requirements of this specification and are applicable to welding conditions encountered under this contract.

1.6.2 Certificates

Before assigning any welder, welding operator, or tacker to work under this contract, the Contractor shall submit the names of the welders, welding operators, and tackers to be employed, and certification that each individual is qualified as specified. The certification shall state the type of welding and positions for which the welder, welding operator, or tacker is qualified, the code and procedure under which the individual is qualified, the date qualified, and the name of the firm and person certifying the qualification tests. The certification shall be kept on file, and 3 copies shall be furnished. The certification shall be kept current for the duration of the contract.

1.6.3 Renewal of Qualification

Requalification of a welder or welding operator shall be required under any of the following conditions:

a. It has been more than 6 months since the welder or welding operator has used the specific welding process for which he is qualified.

b. There is specific reason to question the welder or welding operator's ability to make welds that meet the requirements of these specifications.

c. The welder or welding operator was qualified by an employer other than those firms performing work under this contract, and a qualification test has not been taken within the past 12 months. Records showing periods of employment, name of employer where welder, or welding operator, was last employed, and the process for which qualified shall be submitted as evidence of conformance.

d. A tacker who passes the qualification test shall be considered eligible to perform tack welding indefinitely in the positions and with the processes for which he is qualified, unless there is some specific reason to question the tacker's ability. In such a case, the tacker shall be required to pass the prescribed tack welding

test.

1.7 INSPECTOR QUALIFICATION

Inspection and nondestructive testing personnel shall be qualified in accordance with the requirements of ASNT-01 for Levels I or II in the applicable nondestructive testing method. The inspector may be supported by assistant welding inspectors who are not qualified to ASNT-01, and assistant inspectors may perform specific inspection functions under the supervision of the qualified inspector.

1.8 SYMBOLS

Symbols shall be in accordance with AWS A2.4, unless otherwise indicated.

1.9 SAFETY

Safety precautions during welding shall conform to AWS Z49.1.

PART 2 PRODUCTS

2.1 WELDING EQUIPMENT AND MATERIALS

All welding equipment, electrodes, welding wire, and fluxes shall be capable of producing satisfactory welds when used by a qualified welder or welding operator performing qualified welding procedures. All welding equipment and materials shall comply with the applicable requirements of AWS D1.1.

PART 3 EXECUTION

3.1 WELDING OPERATIONS

3.1.1 Requirements

Workmanship and techniques for welded construction shall conform to the requirements of AWS D1.1 and the AISC Standards applicable as specified in Article 1.3 above. When AWS D1.1 and AISC-01, AISC-02, AISC-03, or AISC-04 conflict, the requirements of AWS D1.1 shall govern.

3.1.2 Identification

Welds shall be identified in one of the following ways:

a. Written records shall be submitted to indicate the location of welds made by each welder, welding operator, or tacker.

b. Each welder, welding operator, or tacker shall be assigned a number, letter, or symbol to identify welds made by that individual. Welders, welding operators, and tackers shall apply their symbol next to the weld by means of rubber stamp, felt-tipped marker with waterproof ink, or other methods that do not cause an indentation in the metal. For continuous welds, the identification mark shall be adjacent to the weld at 3 foot

intervals. Identification with die stamps or electric etchers shall not be allowed.

3.2 QUALITY CONTROL

Testing shall be done by an approved inspection or testing laboratory or technical consultant; or if approved, the Contractor's inspection and testing personnel may be used instead of the commercial inspection or testing laboratory or technical consultant. The Contractor shall perform visual and ultrasonic, magnetic particle, or dye penetrant inspection, as appropriate to the type of work or details, to determine conformance with paragraph STANDARDS OF ACCEPTANCE. Procedures and techniques for inspection shall be in accordance with applicable requirements of AWS D1.1.

3.3 STANDARDS OF ACCEPTANCE

Dimensional tolerances for welded construction, details of welds, and quality of welds shall be in accordance with the applicable requirements of AWS D1.1 and the contract drawings. Nondestructive testing, as appropriate to the type of work or details, shall be by visual inspection and ultrasonic, magnetic particle, or dye penetrant methods. The minimum extent of nondestructive testing shall be random 20 percent of welds or joints, plus locations indicated on the drawings.

3.3.1 Nondestructive Examination

The welding shall be subject to inspection and tests in the mill, shop, and field. Inspection and tests in the mill or shop will not relieve the Contractor of the responsibility to furnish weldments of satisfactory quality. When materials or workmanship do not conform to the specification requirements, the Government reserves the right to reject material or workmanship or both at any time before final acceptance of the structure containing the weldment.

3.3.2 Destructive Tests

When metallographic specimens are removed from any part of a structure, the Contractor shall make repairs. The Contractor shall employ qualified welders or welding operators, and shall use the proper joints and welding procedures, including peening or heat treatment if required, to develop the full strength of the members and joints cut and to relieve residual stress.

3.4 GOVERNMENT INSPECTION AND TESTING

In addition to the inspection and tests performed by the Contractor for quality control, the Government will perform inspection and testing for acceptance to the extent determined by the Contracting Officer. The costs of such inspection and testing will be borne by the Contractor if unsatisfactory welds are discovered, or by the Government if the welds are satisfactory. The work may be performed by the Government's own forces or under a separate contract for inspection and testing. The Government reserves the right to perform supplemental nondestructive and destructive tests to determine compliance with paragraph STANDARDS OF ACCEPTANCE.

3.5 CORRECTIONS AND REPAIRS

When inspection or testing indicates defects in the weld joints, the welds shall be repaired using a qualified welder or welding operator as applicable. Corrections shall be in accordance with the requirements of AWS D1.1 and the specifications. Defects shall be repaired in accordance with the approved procedures. Defects discovered between passes shall be repaired before additional weld material is deposited. Wherever a defect is removed and repair by welding is not required, the affected area shall be blended into the surrounding surface to eliminate sharp notches, crevices, or corners. After a defect is thought to have been removed, and before rewelding, the area shall be examined by suitable methods to ensure that the defect has been eliminated. Repair welds shall meet the inspection requirements for the original welds. Any indication of a defect shall be regarded as a defect, unless reevaluation by nondestructive methods or by surface conditioning shows that no unacceptable defect is present.

-- End of Section --

SECTION 05093

WELDING PRESSURE PIPING

PART 1 GENERAL

1.1 REFERENCES

The publications listed below form a part of this specification to the extent referenced. The publications are referred to in the text by basic designation only.

AMERICAN SOCIETY OF MECHANICAL ENGINEERS (ASME)

ASME B31.1	(1995; B31.1a; B31.1b; B31.1c) Power Piping
ASME BPV II Pt C	(1998) Boiler and Pressure Vessel Code; Section II, Materials, Part C - Specifications for Welding Rods, Electrodes and Filler Metals
ASME BPV IX	(1998) Boiler and Pressure Vessel Code; Section IX, Welding and Brazing Qualifications

AMERICAN WELDING SOCIETY (AWS)

AWS A2.4	(1993) Standard Symbols for Welding, Brazing and Nondestructive Examination
AWS A3.0	(1994) Standard Welding Terms and Definitions
AWS B2.1	(1984) Welding Procedure and Performance Qualification
AWS Z49.1	(1994) Safety in Welding and Cutting and Allied Processes

1.2 DEFINITIONS

Definitions shall be in accordance with AWS A3.0.

1.3 GENERAL REQUIREMENTS

This section covers the welding of all mechanical, plumbing, and pressure piping systems. Deviations from applicable codes, approved procedures, and approved detail drawings will not be permitted without prior written approval. Materials or components with welds made offsite will not be accepted if the welding does not conform to the requirements of this specification, unless otherwise specified. Procedures shall be developed

by the Contractor for welding all metals included in the work. Welding shall not be started until welding procedures, welders, and welding operators have been qualified. Qualification testing shall be performed by an approved testing laboratory, or by the Contractor if approved by the Contracting Officer. Costs of such testing shall be borne by the Contractor. The Contracting Officer shall be notified at least 24 hours in advance of the time and place of the tests. When practicable, the qualification tests shall be performed at or near the worksite. The Contractor shall maintain current records of the test results obtained in the welding procedure, welding operator, welder performance qualifications, and nondestructive examination (NDE) procedures readily available at the site for examination by the Contracting Officer. The procedures for making transition welds between different materials or between plates or pipes of different wall thicknesses shall be qualified. ASME B31.1, requirements for branch connections may be used in lieu of detailed designs. Unless otherwise specified, the choice of welding process shall be the responsibility of the Contractor.

1.4 Performance

The Contractor shall be responsible for the quality of all joint preparation, welding, and examination. All materials used in the welding operations shall be clearly identified and recorded. The inspection and testing defined in this specification are minimum requirements. Additional inspection and testing shall be the responsibility of the Contractor when he deems it necessary to achieve the quality required.

1.5 SUBMITTALS

Government approval is required for submittals with a "GA" designation; submittals having an "FIO" designation are for information only. The following shall be submitted in accordance with Section 01330 SUBMITTAL PROCEDURES:

SD-01 Data

Qualifications; FIO.

Welding procedure qualification.

SD-13 Certificates

Qualifications; GA.

Welder and welding operator performance qualification certificates. Welding inspectors and NDE personnel certificates. Qualifications of testing laboratory or the Contractor's quality assurance organization.

SD-18 Records

Welding Operations; FIO.

Detailed procedures which define methods of compliance to contract drawings and specifications. Inspection and material procurement records. System

and material testing and certification records. Written records and drawings indicating location of welds made by each welder or welding operator.

1.6 QUALIFICATIONS

Welding procedures, welders, and welding operators previously qualified by test may be accepted for the work without requalification, provided that all of the following conditions are fulfilled:

a. Copies of the welding procedures, the procedure qualification test records, and the welder and welding operator performance qualification test records are submitted and approved in accordance with paragraph SUBMITTALS.

b. Testing was performed by an approved testing laboratory or technical consultant or by the Contractor's approved quality assurance organization.

c. The welding procedures, welders, and welding operators were qualified in accordance with ASME BPV IX, or AWS B2.1, AR-2 level; and base materials, filler materials, electrodes, equipment, and processes conformed to the applicable requirements of this specification.

d. The requirements of paragraph "Renewal of Qualification" below are met and records showing name of employer and period of employment using the process for which qualified are submitted as evidence of conformance.

1.6.1 Welding Procedures Qualification

The Contractor shall record in detail and shall qualify the Welding Procedure Specifications for every proposed welding procedure. Qualification for each welding procedure shall conform to the requirements of ASME B31.1 and to this specification. The welding procedures shall specify end preparation for butt welds including cleaning, alignment, and root openings. Preheat, interpass temperature control, and postheat treatment of welds shall be as required by approved welding procedures, unless otherwise indicated or specified. The type of backing rings or consumable inserts, if used, shall be described and if they are to be removed, the removal process shall be described. Copies of the welding procedure specifications and procedure qualification test results for each type of welding required shall be submitted in accordance with paragraph SUBMITTALS. Approval of any procedure does not relieve the Contractor of the sole responsibility for producing acceptable welds. Welding procedures shall be identified individually and shall be referenced on the detail drawings or keyed to the contract drawings.

1.6.2 Welder and Welding Operator Performance

Each welder and welding operator assigned to work shall be qualified in accordance with ASME B31.1.

1.6.2.1 Certification

Before assigning welders or welding operators to the work, the Contractor shall provide the Contracting Officer with their names together with certification that each individual is performance-qualified as specified. The certification shall state the type of welding and positions for which each is qualified, the code and procedure under which each is qualified, date qualified, and the firm and individual certifying the qualification tests.

1.6.2.2 Identification

Each particular weld shall be identified with the personal number, letter, or symbol assigned to each welder or welding operator. To identify welds, written records indicating the location of welds made by each welder or welding operator shall be submitted, and each welder or welding operator shall apply the personal mark adjacent to the welds using a rubber stamp or felt-tipped marker with permanent, weatherproof ink or other methods approved by the Contracting Officer that do not deform the metal. For seam welds, identification marks shall be placed adjacent to the welds at 3 foot intervals. Identification by die stamps or electric etchers will not be allowed.

1.6.2.3 Renewal of Qualification

Requalification of a welder or welding operator shall be required under any of the following conditions:

a. When a welder or welding operator has not used the specific welding process for a period of 3 months; the period may be extended to 6 months if the welder or welding operator has been employed on some other welding process.

b. When a welder or welding operator has not welded with any process during a period of 3 months, all the personal qualifications shall be considered expired, including any extended by virtue of a., above.

c. There is specific reason to question the person's ability to make welds that will meet the requirements of the specifications.

d. The welder or welding operator was qualified by an employer, other than those firms performing work under this contract, and a qualification test has not been taken within the preceding 12 months.

e. Renewal of qualification for a specific welding process under conditions a., b., and d., above, needs to be made on only a single test joint or pipe of any thickness, position, or material to reestablish the welder's or welding operator's qualification for any thickness, position, or material covered under previous qualification.

1.7 DELIVERY, STORAGE, AND HANDLING

All filler metals, electrodes, fluxes, and other welding materials shall be delivered to the site in manufacturers' original packages and stored in a dry space until used. Packages shall be properly labeled and designed to give maximum protection from moisture and to insure safe handling.

1.7.1 Material Control

Materials shall be stored in a controlled access and clean, dry area that is weathertight and is maintained at a temperature recommended by the manufacturer. The materials shall not be in contact with the floor and shall be stored on wooden pallets or cribbing.

1.7.1.1 Damaged Containers

Low-hydrogen steel electrodes shall be stored in their sealed shipping container. If the seal is damaged during shipment or storage, and the damage is not immediately detected, the covered electrodes in that container shall be rebaked in accordance with the manufacturer's instructions prior to issuance or shall be discarded. If a container is damaged in storage and the damage is witnessed, the electrodes from that container shall be immediately placed in a storage oven. The storage oven temperature shall be as recommended by the manufacturer or the welding material specification.

1.7.1.2 Partial Issues

When a container of covered electrodes is opened and only a portion of the content is issued, the remaining portion shall, within 1/2 hour, be placed in a storage oven.

1.7.2 Damaged Materials

Materials which are damaged shall be discarded. Covered electrodes which are oil or water-soaked, dirty, or on which the flux has separated from the wire shall be discarded.

1.8 SYMBOLS

Symbols shall be in accordance with AWS A2.4.

1.9 SAFETY

Safety precautions shall conform to AWS Z49.1.

PART 2 PRODUCTS

2.1 WELDING MATERIALS

Welding materials shall comply with ASME BPV II Pt C. Welding equipment, electrodes, welding wire, and fluxes shall be capable of producing satisfactory welds when used by a qualified welder or welding operator using qualified welding procedures.

PART 3 EXECUTION

3.1 WELDING OPERATIONS

Welding shall be performed in accordance with qualified procedures using qualified welders and welding operators. Welding shall not be done when the quality of the completed weld could be impaired by the prevailing working or weather conditions. The Contracting Officer shall determine when weather or working conditions are unsuitable for welding. Welding of hangers, supports, and plates to structural members shall conform to Section 05090 WELDING, STRUCTURAL.

3.1.1 Base Metal Preparation

Oxy-fuel cutting shall not be used on austenitic stainless steel or nonferrous materials.

3.1.2 Weld Joint Fit-Up

Parts that are to be joined by welding shall be fitted, aligned, and retained in position during the welding operation by the use of bars, jacks, clamps, or other mechanical fixtures. Welded temporary attachments shall not be used except when it is impractical to use mechanical fixtures. When temporary attachments are used, they shall be the same material as the base metal, and shall be completely removed by grinding or thermal cutting after the welding operation is completed. If thermal cutting is used, the attachment shall be cut to not less than 1/4 inch from the member and the balance removed by grinding. After the temporary attachment has been removed, the area shall be visually examined.

3.1.3 Preheat and Interpass Temperatures

Preheat temperatures shall meet the requirements specified by ASME B31.1. However, in no case shall the preheat be below 50 degrees F for ferritic steel or austenitic stainless steel, or 32 degrees F for nonferrous alloys. The maximum interpass temperatures shall not exceed 300 degrees F for austenitic stainless steels, nickel alloys, and copper alloys; and 500 degrees F for carbon steels. Preheat techniques shall be such as to ensure that the full thickness of the weld joint preparation and/or adjacent base material, at least 3 inches in all directions, is at the specified temperature. Preheating by induction or resistance methods is preferred. When flame heating is used, only a neutral flame shall be employed. Oxy-fuel heating shall not be used on austenitic stainless steel or nickel-alloy materials; however, air-fuel heating is acceptable if controlled to insure that the surface temperature does not exceed 150 degrees F. Interpass temperatures shall be checked on the surface of the component within 1 inch of the weld groove and at the starting location of the next weld pass, and for a distance of about 6 inches ahead of the weld, but not on the area to be welded.

3.1.4 Production Welding Instructions

a. Welding shall not be done when the ambient temperature is lower than 0 degree F.

b. Welding is not permitted on surfaces that are wet or covered with ice, when snow or rain is falling on the surfaces to be welded, or during periods of high winds, unless the welders and the work are properly protected.

c. Gases for purging and shielding shall be welding grade and shall have a dew point of minus 40 degrees F or lower.

d. Back purges are required for austenitic stainless steels and nonferrous alloys welded from one side and shall be set up such that the flow of gas from the inlet to the outlet orifice passes across the area to be welded. The oxygen content of the gas exiting from the purge vent shall be less than 2 percent prior to welding.

e. The purge on groove welds shall be maintained for at least three layers or 3/16 inch.

f. Removable purge dam materials shall be made of expandable or flexible plugs, such as plexiglass, plywood (which shall be dry when used), etc. Wood dams shall be kiln-dried quality. Nonremovable purge dams and purge dam adhesives shall be made of water soluble materials. Purge dams shall not be made of polyvinyl alcohol.

g. Any welding process which requires the use of external gas shielding shall not be done in a draft or wind unless the weld area is protected by a shelter. This shelter shall be of material and shape appropriate to reduce wind velocity in the vicinity of the weld to a maximum of 5 mph (440 fpm).

h. Welding of low-alloy and hardenable high-alloy steels may be interrupted provided a minimum of at least 3/8 inch thickness of weld deposit or 25 percent of the weld groove is filled, whichever is greater, and the preheat temperature is maintained during the time that welding is interrupted. If the temperature falls below the minimum preheat temperature before all welding has been completed on a joint, or, where required, before post weld heat treatment, a liquid penetrant or magnetic particle examination shall be performed to insure sound deposited metal before reheating. Welding of other materials may be interrupted without restriction provided a visual inspection is performed before welding is resumed.

i. Tack welds to be incorporated in the final welds shall have their ends tapered by grinding or welding technique. Tack welds that are cracked or defective shall be removed and the groove shall be retacked prior to welding. Temporary tack welds shall be removed, the surface ground smooth, and visually inspected. For low-alloy and hardenable high-alloy steels, the area shall be magnetic particle examination inspected.

j. When joining ferritic steel pressure piping components to

austenitic stainless steel pressure piping components and postweld heat treatment is required, the following requirements apply:

(1) The weld-end preps of ferritic steel components, which are to be welded to austenitic stainless steel, shall be buttered with one of the following weld filler metals and shall conform to the specified requirements:

ASME BPV II Pt C, SFA 5.14, Classification ERNiCr-3.

ASME BPV II Pt C, SFA 5.11, Classification ENiCrFe-2.

(2) The ferritic steel weld-end prep shall be buttered, receive a postweld heat treatment as required by ASME B31.1 and then be machined with the applicable weld-end preparation. After machining, the buttered layer shall be a minimum of 1/4 inch thick.

(3) Pressure piping transition joints shall be completed using ERNiCr-3 or ENiCrFe-2 weld filler metals. No further postweld heat treatment shall be performed.

k. When joining ferritic steel pressure piping components to austenitic stainless steel pressure piping components and postweld heat treatment is not required, prepare and weld the joint using either ERNiCr-3 or ENiCrFe-2 filler metals. For service temperatures of 200 degrees F or less, stainless filler metal 309 ASME BPV II Pt C, SFA 5.4 or 5.9 is permissible in lieu of the nickel-based alloys.

l. Grinding of completed welds is to be performed only to the extent required for NDE, including any inservice examination, and to provide weld reinforcement within the requirements of ASME B31.1. If the surface of the weld requires grinding, reducing the weld or base material below the minimum required thickness shall be avoided. Minimum weld external reinforcement shall be flush between external surfaces.

3.1.5 Postweld Heat Treatment

Postweld heat treatment shall be performed in accordance with ASME B31.1. Temperatures for local postweld heat treatment shall be measured continuously by thermocouples in contact with the weldment.

Postweld heat treatment of low-alloy steels, when required, shall be performed immediately upon completion of welding and prior to the temperature of the weld falling below the preheat temperature. However, postweld heat treatment may be postponed after the completion of the weld, if, immediately after the weld is completed, it is maintained at a minimum temperature of 300 degrees F or the preheat temperature, whichever is greater, for 2 hours per inch of weld thickness.

For low-alloy steels, the cooling rates shall be such that temper embrittlement is avoided.

3.2 EXAMINATIONS, INSPECTIONS, AND TESTS

Visual and NDE shall be performed by the Contractor to detect surface and internal discontinuities in completed welds. When inspection and testing indicates defects in a weld joint, the weld shall be repaired by a qualified welder in accordance with paragraph CORRECTIONS AND REPAIRS.

TABLE I. MANDATORY MINIMUM NONDESTRUCTIVE EXAMINATIONS

Type Weld	Piping Service Conditions and Nondestructive Test		
	Temperatures over 750 degrees F and at all pressures.	Temperatures between 350 degrees F and 750 degrees F inclusive and at pressures above 1,025 psig.	All others.
Butt Welds (Girth and Longitudinal)	RT for NPS over 2 inch MT or PT for NPS 2 inches and less.	RT for over 2 inch NPS with thickness over 3/4 inch. Visual for all sizes with thickness 3/4 inch or less.	Visual for all sizes and thicknesses.
Welded Branch Connections (Size indicated is branch size) (See Note 7)	RT for NPS over 4 inch MT or PT for NPS 4 inches and less.	RT for branch over 4 inch NPS and thickness of branch over 3/4 inch. Visual for all sizes with branch thickness 3/4 inch or less.	Visual for all sizes and thicknesses.
Fillet, Socket Attachment and Seal Welds	PT or MT for all sizes and thicknesses.	Visual for all sizes and thicknesses.	Visual for all sizes and thicknesses.

NOTES TO TABLE I

(1) All welds must be given a visual examination in addition to type of specific nondestructive examination specified.

(2) NPS - nominal pipe size.

(3) RT - Radiographic examination; MT - magnetic particle examination; PT - liquid penetrant examination.

(4) RT of branch welds shall be performed before any nonintegral reinforcing material is applied.

(5) The thickness of butt welds is defined as the thicker of the two abutting ends after end preparation.

(6) Temperatures and pressures shown are design.

(7) In lieu of radiography of welded branch connections when required above, liquid penetrant or magnetic particle examination is acceptable and, when used, shall be performed at the lesser of one half of the weld thickness or each 1/2 inch of weld thickness and all accessible final weld surfaces.

(8) For nondestructive examination of the pressure retaining component, refer to the standards listed in applicable code or the manufacturing specifications.

(9) Fillet welds not exceeding 1/4 inch throat thickness which are used for the permanent attachment of nonpressure retaining parts are exempt from the PT or MT requirements of the above table.

3.2.1 Visual Inspection

Weld joints shall be inspected visually as follows:

a. Before welding - for compliance with requirements for joint preparation, placement of backing rings or consumable inserts, alignment and fit-up, and cleanliness.

b. During welding - for cracks and conformance to the qualified welding procedure.

c. After welding - for cracks, contour and finish, bead reinforcement, undercutting, overlap, and size of fillet welds.

3.2.2 Inspection and Tests by the Government

The Government will perform inspection and supplemental nondestructive or destructive tests as deemed necessary. The cost of supplemental NDE will be borne by the Government. The correction and repair of defects and the reexamination of weld repairs shall be performed by the Contractor at no additional cost to the Government. Inspection and tests will be performed as required for visual inspection and NDE, except that destructive tests may be required also. When destructive tests are ordered by the Contracting Officer and performed by the Contractor and the specimens or other supplemental examinations indicate that the materials and workmanship do not conform to the contract requirements, the cost of the tests, corrections, and repairs shall be borne by the Contractor. When the specimens or other supplemental examinations of destructive tests indicate that materials or workmanship do conform to the specification requirements, the cost of the tests and repairs will be borne by the Government. When destructive tests are made, repairs shall be made by qualified welders or welding operators using welding procedures which will develop the full

strength of the members cut. Welding shall be subject to inspection and tests in the mill, shop, and field. When materials or workmanship do not conform to the specification requirements, the work may be rejected at any time before final acceptance of the system containing the weldment.

3.3 ACCEPTANCE STANDARDS

3.3.1 Visual

All completed welds shall be visually inspected by a CWI licensed inspector, and report submitted to the Contracting Officer before piping is insulated or concealed. The following indications are unacceptable:

a. Cracks.

b. Undercut on surface which is greater than 1/32 inchdeep.

c. Weld reinforcement greater than 3/16 inch.

d. Lack of fusion on surface.

e. Incomplete penetration (applies only when inside surface is readily accessible).

f. Convexity of fillet weld surface greater than 10 percent of longest leg plus 0.03 inch.

g. Concavity in groove welds.

h. Concavity in fillet welds greater than 1/16 inch.

i. Fillet weld size less than indicated or greater than 1-1/4 times the minimum indicated fillet leg length.

3.4 CORRECTIONS AND REPAIRS

Defects shall be removed and repaired as specified in ASME B31.1 unless otherwise specified. Disqualifying defects discovered between weld passes shall be repaired before additional weld material is deposited. Wherever a defect is removed, and repair by welding is not required, the affected area shall be blended into the surrounding surface eliminating sharp notches, crevices, or corners. After defect removal is complete and before rewelding, the area shall be examined by the same test method which first revealed the defect to ensure that the defect has been eliminated. After rewelding, the repaired area shall be reexamined by the same test method originally used for that area. Any indication of a defect shall be regarded as a defect unless reevaluation by NDE or by surface conditioning shows that no disqualifying defects are present. The use of any foreign material to mask, fill in, seal, or disguise welding defects will not be permitted.

-- End of Section --

SECTION 05120

STRUCTURAL STEEL

PART 1 GENERAL

1.1 REFERENCES

The publications listed below form a part of this specification to the extent referenced. The publications are referred to in the text by basic designation only.

AMERICAN INSTITUTE OF STEEL CONSTRUCTION (AISC)

AISC FCD	(1995a) Quality Certification Program Description

AMERICAN SOCIETY FOR TESTING AND MATERIALS (ASTM)

ASTM A 6/A 6M	(1997b) General Requirements for Rolled Structural Steel Bars, Plates, Shapes, and Sheet Piling
ASTM A 36/A 36M	(1997a) Carbon Structural Steel
ASTM A 53	(1997) Pipe, Steel, Black and Hot-Dipped, Zinc-Coated, Welded and Seamless
ASTM A 307	(1997) Carbon Steel Bolts and Studs, 60 000 PSI Tensile Strength
ASTM A 325	(1993) High-Strength Bolts for Structural Steel Joints (Metric)
ASTM A 449	(1993) Specification for Quenched and Tempered Steel Bolts and Studs
ASTM A 490	(1993) High-Strength Steel Bolts, Classes 10.9 and 10.9.3, for Structural Steel Joints (Metric)
ASTM A 500	(1996) Cold-Formed Welded and Seamless Carbon Steel Structural Tubing in Rounds and Shapes
ASTM A 501	(1996) Hot-Formed Welded and Seamless Carbon Steel Structural Tubing
ASTM A 563	(1996) Carbon and Alloy Steel Nuts (Metric)

ASTM A 572/A 572M	(1997c) High-Strength Low-Alloy Columbium-Vanadium Structural Steel
ASTM F 436	(1993) Specification for Hardened Steel Washers
ASTM F 844	(1990) Washers, Steel, Plain (Flat), Unhardened for General Use
ASTM F 959	(1996) Compressible-Washer-Type Direct Tension Indicators for Use with Structural Fasteners

AMERICAN SOCIETY OF MECHANICAL ENGINEERS (ASME)

ASME B18.21.1	(1994) Lock Washers (Inch Series)
ASME B46.1	(1995) Surface Texture (Surface Roughness, Waviness, and Lay)

AMERICAN WELDING SOCIETY (AWS)

AWS A2.4	(1998) Standard Symbols for Welding, Brazing and Nondestructive Examination
AWS D1.1	(2000) Structural Welding Code - Stee

STEEL STRUCTURES PAINTING COUNCIL (SSPC)

SSPC Paint 25	(1991) Red Iron Oxide, Zinc Oxide, Raw
SSPC SP 2	(1995) Hand Tool Cleaning
SSPC SP 10	Near White Blast Cleaning

1.2 GENERAL REQUIREMENTS

Structural steel fabrication and erection shall be performed by an organization experienced in structural steel work of equivalent magnitude. The Contractor shall be responsible for correctness of detailing, fabrication, and for the correct fitting of structural members. Bolted and/or welded connections, not shown on the contract drawings, shall be designed and detailed in accordance with pertinent provisions of AISC. AISC Manuals, Vols. I and II, either ASD or LRFD (AISC-01 and AISC-02; or AISC-03 and AISC-04; but not both) shall govern the work, including connection design. See Drawings for reactions, forces, notes and other provisions and requirements. Substitution of sections or modification of connection details will not be accepted unless approved by the Contracting Officer. Welding shall be in accordance with AWS D1.1 and Section 05090. High-strength bolting shall be in accordance with applicable AISC Standards as specified above in this Article 1.2.

1.3 SUBMITTALS

Government approval is required for submittals with a "GA" designation; submittals having an "FIO" designation are for information only. The following shall be submitted in accordance with Section 01330 SUBMITTAL PROCEDURES:

SD-04 Drawings

Standard Details; GA. Connection Design Calculations; GA.

Prior to submitting detailed Shop Drawings, design calculations and details for all connections (except where fully shown on the Drawings), shall be prepared under supervision of registered professional engineer, registered in the State of New York.

Joint welding Procedures; GA.

Joint welding procedures and program of welding sequence (for each component and for welding components together) before any welding is done. After return of submittal, welding procedures and sequences shall be followed without deviation. Contracting Officer may require requalification of these welding procedures by tests prescribed in AWS "Standard Qualification Procedure".

Structural Steel System; GA.

Detailed Shop Drawings, including erection drawings, schedules and index sheets showing: grades of steel; identification mark of members; orientation and relation of members to appropriate grid lines; setting elevations for column bases; framing to support metal deck; location and size of openings, slots, and holes; requirements, such as punched or drilled holes, for attachment of other materials or parts of construction; type, size, and location of shop and field connections; type, size, and extent of welds; joint welding procedures; welding sequences (use welding symbols per AWS A2.4); cleaning requirements prior to painting; type and dry thickness of paint. Members to be galvanized shall be so noted on shop drawings.

1. Contracting Officer's checking is a review for conformance with the design concept of the project and compliance with the information given in the Contract Documents. The Contractor is responsible for: confirming and correlating all quantities and dimensions; selecting fabrication processes and techniques of construction coordinating his work with that of all other trades; and performing his work in a safe and satisfactory manner.

2. Do not proceed with fabrication of material or performance of work until corresponding item on Shop Drawing has been reviewed by Contracting Officer.

Bolt Installation; GA.

Drawings and directions for the installation of anchor bolts, high strength bolts, direct tension indicator washers, torque control snap-off bolts, or items to be installed under another Section of the Specifications. Verify

proper installation of same.

SD-08 Statements

Quality Control Manual; GA.

Prior to start of fabrication, description of field and plant inspection procedures including titles of responsible personnel, methods and equipment for non-destructive testing of specific typical joints, documentation of inspection results, and procedures for repairing or disposing of nonconforming materials. Results of tests during the course of work shall, upon request by Contracting Officer, be made available for review by Contracting Officer and/or Testing Agency.

Erection; GA.

Prior to starting work, description of methods, sequence of erection, and type of equipment proposed for use in erecting structural steel work. Provide construction loads imposed on permanent structure. Describe all necessary temporary supports, including their sequence of installation and removal. Contracting Officer's review is only for effects of methods on permanent structure. This submission shall not relieve Contractor of his responsibility for providing proper methods, equipment, workmanship, and safety precautions.

SD-13 Certificates

Mill Test Reports; FIO.

Certified copies of mill test reports for structural steel, connection material, structural bolts, nuts, washers and other related structural steel items, (including names and locations of mills and shops, and analyses of chemical and physical properties), and also including attesting that the structural steel furnished contains no less than 25 percent recycled scrap steel and meets the requirements specified, prior to the installation.

Welder Qualifications; GA.

Certified copies of welder qualifications test records showing qualification in accordance with AWS D1.1.

Fabrication; GA.

A copy of the AISC certificate indicating that the fabrication plant meets the specified structural steelwork category.

Painting Certification; FIO.

Certification stating that requirements pertaining to pre-paint cleaning and painting of steel have been performed in accordance with Contract Documents.

Galvanizing Certification; FIO.

Certification stating that requirements pertaining to pre-galvanizing cleaning and galvanizing of steel have been performed in accordance with Contract Documents.

Affidavits; FIO.

On request by Contracting Officer, manufacturer's and/or fabricator's and/or erector's affidavit stating that material or product provided complies with Contract Documents.

SD-14 Samples

High Strength Bolts and Nuts; GA. Carbon Steel Bolts and Nuts; FIO. Nuts Dimensional Style; FIO. Washers; FIO.

Random samples of bolts, nuts, and washers as delivered to the job site, if requested, taken in the presence of the Contracting Officer and provided to the Contracting Officer for testing.

1.4 STORAGE

Material shall be stored out of contact with the ground in such manner and location as will minimize deterioration.

PART 2 PRODUCTS

2.1 STRUCTURAL STEEL

2.1.1 High-Strength Low-Alloy Steel

High-strength low-alloy steel shall conform to ASTM A 572/A 572M, Grade 50, or ASTM A 588/A588M, Grade 50; use this for all steel unless specifically called for otherwise, or specifically allowed to be ASTM A 36. Use A 588, or A 572 modified, for plates over 1-1/2 in. thick.

2.1.2 Carbon Grade Steel

Carbon grade steel conforming to ASTM A 36/A 36M for lintels; otherwise only where specifically called for, or specifically allowed on the Drawings.

2.2 STRUCTURAL TUBING

Structural tubing shall conform to ASTM A 500, Grade B.

2.3 STEEL PIPE

Steel pipe shall conform to ASTM A 501; or to ASTM A 53, Type E or Type S, Grade B.

2.4 HIGH STRENGTH BOLTS AND NUTS

High strength bolts shall conform to: ASTM A 325, Type 1 with carbon steel

nuts conforming to ASTM A 563, Grade C or DH; or ASTM A 325, Type 3 with carbon steel nuts conforming to ASTM A 563, Grade C3; or ASTM A 449 anchor bolts where called for on the drawings, or ASTM A 490, Type 1 or 2 with carbon steel nuts conforming to ASTM A 563, Grade DH; or ASTM A 490, Type 3 with carbon steel nuts conforming to ASTM A 563, Grade DH3. Bolts with Torque Control twist-off ends may be used.

2.5 CARBON STEEL BOLTS AND NUTS

Carbon steel anchor bolts shall conform to ASTM A 307 (except where ASTM A 449 anchor bolts are called for on the drawings), Grade A with carbon steel nuts conforming to ASTM A 563, Grade A.

2.6 NUTS DIMENSIONAL STYLE

Carbon steel nuts shall be Hex style when used with ASTM A 307 bolts or Heavy Hex style when used with ASTM A 325 or ASTM A 490 bolts.

2.7 WASHERS

Plain washers shall conform to ASTM F 844. Other types, when required, shall conform to ASME B18.21.1 or ASTM F 436 or ASTM F 959.

2.8 DIRECT TENSION INDICATING COMPRESSIBLE WASHERS

ASTM F 959, steel alloy washer with 5 to 6 circular protrusions on one side and selected to match bolt strength.

2.9 FILLER METAL FOR WELDING

E70XX low hydrogen as per Table J2.3 of LRFD Specification or as per Table J2.5 of the Allowable Stress Specification of AISC.

2.10 HEADED STUDS

ASTM A 108, Grades 1015 - 1020, minimum yield point of 50,000 psi, and minimum tensile strength of 60,000 psi.

2.11 SHOP PAINT

Shop paint shall be as follows:

2.11.1 Shop Primer for Structural Steel not in Swimming Pool Areas

Except as otherwise specified herein, paint structural steel not in swimming pool areas in accordance with SSPC Paint 25. See Architectural Drawing A3.00 for Pool Area Definition.

Clean steel surfaces in accordance with SSPC SP 2, Hand Tool Cleaning.

Apply one coat of shop primer at the rate of 2.0 to 3.0 DFT to surfaces to within 2 inches of any field-weld or high-strength bolted friction-type connection.

Surfaces to be Left Unpainted: Surfaces of un-exposed structural steel to be left unpainted, include the following:

1. Surfaces to receive metal deck and/or shear connectors fastened by welding.
2. Contact surfaces of high-strength bolted connections.
3. Finished bearing surfaces and surfaces to be welded in field.
4. Surfaces to receive sprayed-on fireproofing, except as specified otherwise herein at swimming pool areas.
5. Member areas to be embedded in concrete or mortar.

2.11.2 Shop Primer for Structural Steel in Swimming Pool Areas

2.11.2.1 General:

Structural steel work in Swimming Pool areas includes all structural steel in swimming pool areas, within walls, ceilings, or floors of swimming pool areas; and including exposed-to-view and non-exposed structural steel in swimming pool areas; See Architectural Drawing A3.00 for Pool Area Definition.

2.11.2.2 Surface Preparation:

Steel in Swimming Pool Area : SSPC SP 10, Near White Blast Cleaning.

2.11.2.3 Shop Primer Application - Spray Only:

Steel in Swimming Pool Area : Two separate shop primer coats are required; first coat shall be 2.5 to 3.5 DFT of Tnemec Series 90-97 Tneme-Zinc (or equal as manufactured by Ameron or Valspar), followed by the second coat, consisting of 4.0 DFT of Tnemec Series 27-1211 Typoxy (or equal as manufactured by Ameron or Valspar).

Surfaces inaccessible to blast cleaning after assembly shall be blast cleaned and coated before assembly. Zinc-rich primers may be applied to friction-type connections in accordance with AISC Specifications.

2.12 GALVANIZING

Hot dip galvanize steel so designated herein or on the drawings, after fabrication, in compliance with ASTM A 123. Hot-dip galvanized steel shall be inspected for compliance with ASTM A 123 and shall be marked with a stamp that indicates the name of the galvanizer, the ASTM Number, and the ounces of zinc per square foot of surface. A notarized Certificate of Compliance with all of the above shall be required from the galvanizer.

PART 3 EXECUTION

3.1 INSPECTION

Examine work prepared by other trades (under other Specification Sections) to receive work of this Section and resolve any defects affecting installation. Commencement of work will be construed as complete acceptance of preparatory work.

3.2 HANDLING AND STORAGE

Handle and stack materials carefully to prevent deformation or damage. Use fabric slings to transport finished, prepainted members. Store structural steel carefully on substantial timbers and blocking, so arranged that steel will be free from earth and properly drained, preventing any spattering with dirt or accumulation of water in or about steel. Take care to prevent damage to any shop painted surfaces and to prevent accumulation of mud, dirt, or other foreign matter on steel. Any accumulation shall be completely removed prior to erection.

3.2.1 Bolt Storage

All bolts shall be kept in dry storage until needed for installation. ASTM A 325 bolts 1-1/8 in. and 1-1/4 in. and ASTM A 490 bolts 1 in. and over must first have Johnson's Stick Wax #140 (or equal) applied to their threads before being assembled in work. If bolts have been left out and have become rusty before use, they shall be rejected and shall not be used until they have been cleaned and waxed with the wax specified above.

3.3 FABRICATION

Fabrication shall be in accordance with the applicable provisions of the above specified AISC Standards (AISC-01 and AISC-02; or AISC 03 and AISC-04). Fabrication and assembly shall be done in the shop to the greatest extent possible. The fabricating plant shall be certified under the AISC FCD for Category II structural steelwork. Compression joints depending on contact bearing shall have a surface roughness not in excess of 500 micro inches as determined by ASME B46.1, and ends shall be square within the tolerances for milled ends specified in ASTM A 6/A 6M. Structural steelwork, except surfaces of steel to be encased in concrete, surfaces to be field welded, surfaces to be fireproofed, and contact surfaces of friction-type high-strength bolted connections shall be prepared for painting in accordance with these specifications and primed with the specified paint.

3.3.1 Tolerances

Permissible tolerances for steel members shall conform to ASTM A6. The as-fabricated tolerances shall conform to the cited AISC Specifications, AISC Code and the AWS Code, except where closer tolerances and straightness of members are required for fitting of the work in fabrication or erection.

3.3.2 Provision for Attachment of Other Materials:

Punch and drill steel for attachment of other materials indicated on Drawings or noted in Specifications to be attached to steel.

3.3.3 Connection Design

The Contractor shall design and detail all connections to resist the loads and reactions shown on the drawings, and as shown and called for and specified. Fabrication and erection details shall supplement and be

consistent with details shown on the drawings. Do not use one-sided or other eccentric connections, except in isolated cases where approval of Contracting Officer is obtained.

3.3.4 Welding

1. Provide quality control and qualification of welders and welding procedures and operations as specified under "Inspection and Testing" in this Section and in Section 05090.

2. Shop Welding Process: Use shielded metal-arc, submerged arc, gas metal-arc, and flux cored-arc, or other process approved by Contracting Officer.

3. Groove Welds: Provide complete penetration unless otherwise noted on Drawings.

4. Fillet Welds: Where weld symbol is not shown or welds are not dimensioned, provide continuous fillet welds all around and on both sides as appropriate. Minimum dimension shall be as shown in Table J2.5 of LRFD Specification or Table J2.4 of Allowable Stress Specification of AISC.

5. Base metal shall be checked by Contractor to insure absence of laminations or other defects. Welds shall be sound throughout and have no cracks.

6. Where structural joints are required to be welded, details of joints, technique of welding employed, appearance and quality of welds made, and methods used in correcting defective work, shall conform to applicable requirements noted under References in this Section.

7. Prepare joint welding procedures and program of welding sequence (for each component and for welding jointing components to each other) and submit for approval before any welding is done. After approval, welding procedures and sequences shall be followed without deviation unless specific approval for change is obtained from Contracting Officer, who may require requalifications of these welding procedures by tests prescribed in AWS "Standard Qualification Procedures".

8. Each welder working on the project shall be assigned an identification symbol or mark. Each welder shall mark or stamp his identification symbol at each weldment completed, whether in shop or field.

3.3.5 Manual Oxygen Cutting

Manual oxygen cutting shall be done only with a mechanically guided torch, except as permitted below.

1. Gas cut edges which are not welded and will be free of substantial stresses, as determined by the Contracting Officer, may be cut

manually with an unguided torch provided that specified AISC edge distances to holes are maintained.

2. Gas cut edges which will be subjected to substantial stress (over one-half the allowable stress), as determined by the Contracting Officer, or which are to be welded may be cut manually with an unguided torch to a line within 1/8 inch of the finished dimension, with final removal of material completed by chipping or grinding to produce a surface quality equal to that of the base metal edges.

3.3.6 Openings in Structural Steel

Cutting of openings differing from or in addition to those shown on approved shop drawings will not be permitted without written approval of Contracting Officer.

3.3.7 Corrective Work

Structural steel elements having fabrication errors and/or which do not satisfy tolerance limits shall not be incorporated in finished work. Such elements may be corrected if permitted by Contracting Officer. Submit drawings showing details of proposed corrective work. These drawings shall be approved by Contracting Officer prior to performing corrective work. Corrective work shall be performed in accordance with requirements of Contract Documents. Corrective work and any retesting which may be required shall be at the Contractor's expense.

3.3.8 Identification

Structural steel members shall have an assigned position and identification mark or symbol, clearly indicated on each piece near one end. Marks shall correspond to that given on Shop Drawings and erection drawings related to specific members.

3.3.9 Field Measuring

Items requiring field measuring shall have all dimensions verified in the field before fabrication. Field dimensions shall be shown on the Shop Drawings and shall be noted as having been verified in the field.

3.3.10 Welding and Bolting Records

Maintain records of shop and field welding procedures and records of welders employed, date of qualification and identification symbol or mark. Maintain records for each impact wrench used in shop and field, showing dates, sizes of bolts tested and the corresponding torque values. Certified copies of the records shall be made available to Contracting Officer, and testing laboratory.

3.3.11 GALVANIZING

Safeguard against embrittlement in conformance with ASTM A 143. To safeguard against warpage or distortion of steel members, in conformance

with ASTM A 384, steel fabricator shall submit shop drawings of non-standard fabrications, all tubular fabrications, all fabrications involving any dimension which exceeds the size of the galvanizer's kettle, and any fabrication involving materials of different thicknesses. These drawings shall be submitted to the galvanizer prior to fabrication to determine the suitability of the material for galvanizing.

3.3.12 HEADED STUD WELDING REQUIREMENTS

Testing Agency shall conduct test welding procedure for welding of headed studs. Headed studs shall be applied in accordance with manufacturer's printed instructions. Use only personnel and equipment authorized by manufacturer.

Check headed studs for indications of insufficient and improper weld:

1. Less than 360 degree fillet for headed studs.
2. Burn-off (reduction in length after welding) less than 1/8 inch.
3. Cold appearance of weld.

If, after welding of any headed stud, visual inspection indicates any imperfections listed above or any other questionable appearance, such shear connector shall be struck hard with three-pound hammer and bent 15 degrees off perpendicular to beam and toward nearest end of beam. Headed studs meeting this test shall be considered acceptable and left in this position. Headed studs failing under this test shall be replaced.

Personnel welding headed studs shall be qualified using elements of above procedure, prior to any production welding of headed studs.

3.4 ERECTION

Erection of structural steel shall be in accordance with the applicable provisions of the referenced AISC Manuals, except as otherwise indicated on Drawings or specified herein.

3.4.1 Surveys

Employ an engineer or surveyor for accurate erection of structural steel. Check elevations of concrete and masonry bearing surfaces, and locations of anchor bolts and similar devices, before erection work proceeds, and report discrepancies to Contracting Officer. Do not proceed with erection until corrections have been made, or until compensating adjustments to structural steel work have been agreed upon with Contracting Officer. Establish required leveling and plumbing references with respect to expected service temperatures inside the building; compensate as required for difference between service temperature and erection temperature.

3.4.2 Temporary Shoring and Bracing

Provide temporary shoring and bracing members with connections of sufficient strength to bear imposed loads. Remove temporary members and connections when permanent members are in place and final connections are made. Provide temporary guy lines to achieve proper alignment of

structures as erection proceeds. Loads imposed during construction shall be determined by an Engineer employed by Contractor.

3.4.3 Structural Connections

Anchor bolts and other connections between the structural steel and foundations shall be provided and shall be properly located and built into connecting work. Structural connections shall be completed before load is applied.

3.4.4 Base Plates and Bearing Plates

Base plates for columns and bearing plates for beams, girders, and similar members shall be provided. Base plates and bearing plates shall be clean and provided with full bearing after the supported members have been plumbed and properly positioned, but prior to placing superimposed loads. Separate setting plates under column base plates will not be permitted. The area under all such plates shall be clean and damp-packed solidly with non-shrink grout. Non-shrink grout shall be as specified in Section 03300 CAST-IN-PLACE STRUCTURAL CONCRETE.

3.4.5 Field Connections

Beams shall have framed connections using 3/4 inch diameter (min.) high strength bolts in accordance with requirements of AISC Manuals and Contract Documents. Do not use one-sided or other eccentric connections, except in isolated cases where approval of Contracting Officer is obtained. Snug all nuts before applying final torque to any one.

3.4.5.1 High Strength Steel Bolts

Perform installation by using pneumatic powered impact wrenches with sufficient capacity and adequate supply of compressed air. On large bolts (1-1/8 in. and 1-1/4 in. ASTM A 325 and 1 in. or over ASTM A 490) wrenches used shall be equivalent in capacity to a Chicago Pneumatic 6120. Air pressure shall be maintained at 100 psi at the wrench.

Perform installation in accordance with turn-of-nut method outlined in RCSC "Specification for Structural Joints Using ASTM A 325 or ASTM A 490 Bolts" in AISC Manual, with modifications noted below.

1. Use hardened washer under bolt head or nut, whichever is turned in tightening, unless oversize holes have been approved which require such washer under both head and nut. Use not more than two washers.

2. Qualification of high strength bolting procedures and operations shall be as specified under "Inspection, Testing and Quality Control", in this Section.

3. Refer to this bolting installation method as "Modified Turn-of-nut Tightening Method".

In lieu of "modified turn-of-nut" method, direct tension indicator washers

or twist-off Tension Control (TC) bolts may be used at Contractor's option provided it can be demonstrated by an accurate direct measurement procedure that bolt has been properly tensioned; written approval by Contracting Officer is required.

1. If tension indicator washers are used, place protrusions against bolt head and tighten the nut. Do not tighten at head. All plies must first be brought into firm contact by partially compressing the direct tension indicator bumps. Tightening shall commence from the most rigid part of the connection to its free edges. The part not being turned must be held by a spud wrench, as the bolt must not be allowed to spin.

2. If twist-off bolts are used for friction type connections, snug tight all bolts in connections before proceeding to apply final twist-off torque.

Make joints without use of erection bolts; high strength bolts required for joint shall serve that purpose.

Correct poor matching of holes by drilling to next larger size and using larger size bolt, if approved by Contracting Officer. Welding or enlarging with drift pins shall not be permitted without Contracting Officer's approval.

If top flange plates are used at moment connections, bolts at top flange plate shall be oriented nut-end down.

3.4.5.2 Field Welding

Execute in accordance with requirements under "FABRICATION" in this Section, excepting those requirements which apply to shop conditions only.

3.4.6 Errors or Deformations

Errors in shop fabrication or deformations resulting from handling and/or transportation that prevent proper assembly and fitting of parts shall be reported immediately to Contracting Officer for approval of method of correction. Approved corrections shall be made at Contractor's expense.

3.4.7 Anchor Bolts

Furnish templates and anchor bolts and instructions for setting of anchor bolts and other items to be embedded in cast-in-place concrete, in ample time so that this work will not be delayed.

3.4.8 Setting Bases and Bearing Plates

Clean bearing surfaces of concrete and masonry and the bottom of the plates. Set plates level to correct elevations and support temporarily on steel wedges, shims, leveling devices, or as shown on Drawings, until corresponding supported member has been positioned, plumbed and anchor-bolted. Entire area under plates shall then be packed solidly with non-shrink bedding grout. Leave protruding leveling devices in place until

after grout has attained required strength, and then cut off flush with top or edges of base plates, or both, except as otherwise noted.

3.4.9 Alignment

Align, level, and adjust members accurately prior to final fastening. Fasten compression member splices only after abutting surfaces have been brought completely into contact. Splice members only where shown on the Drawings.

3.4.10 Surfaces to Receive Shear Connectors (Headed Studs)

Top flanges of beams and other steel surfaces to receive shear connectors, shall be free of paint, water, dirt, rust, or any other material detrimental to welding.

3.4.11 Openings in Structural Steel Required in Field

Make no openings without the specific written approval of the Contracting Officer. All re-entrant corners shall be shaped notch-free to a radius of at least 1/2 inch at blocks, copes, cuts and openings.

Openings in structural steel shall be cut and/or reinforced only by structural steel Contractor, and only with specific prior written approval of the Contracting Officer.

Field Oxygen Cutting shall not be performed without written consent of Contracting Officer. Once approval is obtained, execute in accordance with requirements under "FABRICATION" in this Section.

3.4.12 Field Priming

After erection, the field bolt heads and nuts, field welds, connections and other surfaces required to be painted, and any abrasions in the shop coat shall be cleaned and primed with paint of the same manufacturer and type as that used for the shop coat.

1. Do not paint connections until after inspection and approval of Testing Agency.

2. Do not paint when ambient temperature is below 37 degrees F. or when conditions differ from paint manufacturer's recommendations, as approved by Contracting Officer.

3. Touch up damaged galvanizing with zinc-rich paint in accordance with ASTM A 780.

3.5 INSPECTION AND TESTING

Inspection and testing of structural steel fabrication and erection shall be performed by an independent Testing Agency, under a separate contract with the Contractor. Materials and workmanship shall be subjected to inspection and testing in mill, shop and/or field by Testing Agency and shall be subjected to periodic observation by the Contracting Officer.

Such inspection and testing shall not relieve Contractor of his responsibility to provide his own inspection, testing, and quality control as necessary to furnish materials and workmanship in accordance with requirements of Contract Documents.

Requirements of this Section are generally written for purpose of securing best workmanship and end result. Certain deviations may be desirable under certain project conditions, however, and may be allowed after examination by and upon written approval of Contracting Officer. Any such approved deviation shall not be construed as waiver of requirements of Specifications.

Contractor shall maintain his own inspection and quality control of shop and field work. Quality control and inspection of welding work shall consist of supervision by Contractor's own welding inspector using non-destructive spot testing, at rate of at least one test per 50 linear feet of weld by each welder, except that full penetration welds shall be tested 100 percent by the ultrasonic method. Results of such tests shall be provided to Contracting Officer and/or Testing Agency when requested.

Notify Contracting Officer and Testing Agency prior to start of any fabrication, erection, or other phases of work so as to afford them reasonable opportunity to visit the site. Such notification shall be made at least 36 hours in advance.

Facilitate inspection and testing by Testing Agency. Contractor shall, at his own expense, furnish Testing Agency, upon request, with:

1. Complete sets of approved Shop Drawings and corrective work procedures at fabricating shop(s) and in field.

2. Cutting lists, order lists, material bills, shipping lists, and mill reports.

3. Information as to time and place of all rollings and shipments of material to shops and field.

4. Representative sample pieces requested for testing.

5. Free and safe access and assistance for testing materials, and proper facilities for inspection of work, in mill, shop and field.

Do not remove any marks or tags applied by Testing Agency identifying rejected work.

Any work found deficient shall be corrected or replaced in accordance with these specifications. Deficient welds shall be cut out to sound material and rewelded. Deficient assemblies shall be taken apart, corrected and reassembled, using new materials as required. A490 bolts shall not be reused. ASTM A 325 bolts may be retightened once only.

Structural steel work which has been rejected by Contracting Officer and/or Testing Agency in mill, shop, or field, shall be corrected by Contractor without delay and at no expense to the Government. Additional tests shall

be performed at Contractor's expense to confirm compliance of corrected work.

The acceptance of steel work at the shop shall not prevent its final rejection at the job site, or even after it has been erected, if it is found to be defective in any way.

Qualifications for Welding Work:

1. Qualify welding processes and welding operators in accordance with the latest edition AWS "Standard Qualification Procedure".

2. Provide certificates of welders to be employed in the work showing that they have satisfactorily passed AWS qualification tests for the specific types of welds they will be doing; where certification dates are older than 12 months before start of welding work, certify that affected welder(s) have been continuously employed doing the same type(s) of welds since certification.

Sampling and testing for quality assurance of bolted and welded work by the Contractor's Testing Agency shall include the following:

1. Shop and Field Bolted Connections:

   a. Inspect in accordance with RCSC specifications. Calibrate wrenches periodically.

   b. A minimum of two bolts in each connection shall be tested. If tension indicating washers are used, verify bolt tension in accordance with approved procedure for this project (see paragraph 3.4.5.1) and verify position of washers and method of tightening nut. If twist-off bolts are used, verify that all knurled ends have been twisted off. Periodically verify twist-off torques.

2. Shop and Field Welding: Inspect and test during fabrication of structural steel assemblies and in accordance with AWS Codes, as follows:

   a. Certify welders and conduct inspections and tests as required. Record types and locations of defects found in work. Record work required and performed to correct deficiencies.

   b. Perform visual inspection of all welds.

   c. Perform random verification ultrasonic testing of 20% of shop full penetration welds.

   d. Perform 100% ultrasonic testing, in accordance with ASTM E-164, on all field full penetration welds.

3. Camber: Inspect fabricator's procedures and material to ensure specified camber is achieved in accordance with referenced standards.

-- End of Section --

SECTION 05300

STEEL DECKING

PART 1 GENERAL

1.1 REFERENCES

The publications listed below form a part of this specification to the extent referenced. The publications are referred to in the text by basic designation only.

AMERICAN INSTITUTE OF STEEL CONSTRUCTION (AISC)

AISC-04	(1989) Specification for Structural Steel Buildings - Allowable Stress Design and Plastic Design

AMERICAN IRON AND STEEL INSTITUTE (AISI)

AISI-01	(1996) Cold-Formed Steel Design Manual

AMERICAN SOCIETY FOR TESTING AND MATERIALS (ASTM)

ASTM A 108	(1995) Steel Bars, Carbon, Cold Finished, Standard Quality
ASTM A 653/A 653M	(1997a) Steel Sheet, Zinc-Coated (Galvanized) or Zinc-Iron Alloy-Coated (Galvannealed) by the Hot-Dip Process
ASTM A 780	(1993a) Repair of Damaged and Uncoated Areas of Hot-Dipped Galvanized Coatings

AMERICAN WELDING SOCIETY (AWS)

AWS D1.1	(2000) Structural Welding Code - Steel
AWS D1.3	(1998) Structural Welding Code - Sheet Steel

STEEL DECK INSTITUTE (SDI)

SDI-02	(1987; Amended 1991) Diaphragm Design Manual
SDI Pub No 29	(1995) Design Manual for Composite Decks, Form Decks, Roof Decks, and Cellular Metal Floor Deck with Electrical Distribution

STEEL STRUCTURES PAINTING COUNCIL (SSPC)

SSPC Paint 20	(1991) Zinc-Rich Primers (Type I - Inorganic and Type II - Organic)

1.2 SUBMITTALS

Government approval is required for submittals with a "GA" designation; submittals having an "FIO" designation are for information only. The following shall be submitted in accordance with Section 01330 SUBMITTAL PROCEDURES:

SD-01 Data

Deck Units; GA.

Design computations for the structural properties of the deck units or SDI certification that the units are designed in accordance with SDI specifications.

SD-04 Drawings

Deck Units; GA. Accessories; GA. Attachments and Headed Studs; GA. Holes and Openings; GA.

Drawings shall include type, configuration, structural properties, location, and necessary details of deck units, accessories, and supporting members; size and location of holes to be cut and reinforcement to be provided; location and sequence of welded or fastener connections and numbers and spacings of headed stud shear connectors; and the manufacturer's erection instructions.

SD-13 Certificates

Deck Units; FIO. Attachments; FIO. Headed Studs; FIO.

Manufacturer's certificates attesting that the decking material and the headed studs meet the specified requirements. Manufacturer's certificate attesting that the operators are authorized to use the low-velocity piston tool.

SD-14 Samples

Deck Units; GA. Accessories; FIO Headed Studs; FIO.

A 2 sq. ft. sample of the decking material to be used, along with a sample of each of the accessories used, of the headed studs to be used, and of the flexible closure strips to be used.

SD-18 Records

Attachments; FIO Headed Studs; FIO.

Prior to welding operations, copies of qualified procedures and lists of

names and identification symbols of qualified welders and welding operators for deck units and for headed studs.

1.3 DELIVERY, STORAGE, AND HANDLING

Deck units shall be delivered to the site in a dry and undamaged condition, stored off the ground with one end elevated, and stored under a weathertight covering permitting good air circulation. Finish of deck units shall be maintained at all times by using touch-up paint whenever necessary to prevent the formation of rust.

PART 2 PRODUCTS

2.1 DECK UNITS

Deck units shall conform to SDI Pub No 29. Panels of maximum possible lengths shall be used to minimize end laps. Deck units shall be fabricated in lengths to span 3 or more supports with flush, telescoped, or nested 2 inch laps at ends, and interlocking or nested side laps, unless otherwise indicated. Deck with cross-sectional configuration differing from the units indicated may be used, provided that the properties of the proposed units, determined in accordance with AISI-01, are equal to or greater than the properties of the units indicated and that the material will fit the space provided without requiring revisions to adjacent materials or systems.

2.1.1 Roof Deck

Steel deck used in conjunction with insulation and built-up roofing shall conform to ASTM A 653. Roof deck units shall be fabricated of the steel design thickness required by the design drawings and shall be zinc-coated in conformance with ASTM A 653/A 653M, G90 coating class.

2.1.2 Composite Deck

Deck to receive concrete as a filler or for composite deck assembly shall conform to ASTM A 653/A 653M. In all composite slabs, the deck is used as the tension reinforcing and shall be fabricated of the steel design thickness required by the drawings, and shall be zinc-coated in conformance with ASTM A 653/A 653M, G90 coating class. Deck units used in composite deck shall have adequate embossment to develop mechanical shear bond to provide composite action between the deck and the concrete.

2.1.3 Sump Pans

Sump pans shall be provided for roof drains and shall be minimum 0.075 inch thick steel, flat or recessed type as indicated on Drawings. Sump pans shall be shaped to meet roof slope by the supplier or by a sheet metal specialist. Bearing flanges of sump pans shall overlap steel deck a minimum of 3 inches. Opening in bottom of pan shall be shaped, sized, and reinforced to receive roof drain.

2.1.4 Shear Connectors

Shear connectors shall be headed stud type, ASTM A 108, Grade 1015 - 1020,

cold finished carbon steel with dimensions complying with AISC-04.

2.1.5 Flexible Closure Strips

Provide flexible, vulcanized, closed-cell, synthetic rubber closure strips at all locations where floor and roof deck passes over interior partitions, interior walls, exterior walls, and where indicated. Install with adhesive according to manufacturer's written instructions to ensure complete closure. Make closures air-tight at tops of perimeter walls of Pool Areas, as defined on Drawing A3.00.

2.2 TOUCH-UP PAINT

Touch-up paint for zinc-coated units shall be an approved galvanizing repair paint with a high-zinc dust content. Welds shall be touched-up with paint conforming to SSPC Paint 20 in accordance with ASTM A 780. Finish of deck units and accessories shall be maintained by using touch-up paint whenever necessary to prevent the formation of rust.

2.3 ADJUSTING PLATES

Adjusting plates or segments of deck units shall be provided in locations too narrow to accommodate full-size units. As far as practical, the plates shall be the same thickness and configuration as the deck units.

2.4 CLOSURE PLATES

2.4.1 Closure Plates for Roof Deck

Voids above interior walls shall be closed with sheet metal where shown. Open deck cells at parapets, end walls, eaves, and openings through roofs shall be closed with sheet metal. Sheet metal shall be same thickness as deck units.

2.4.2 Closure Plates for Composite Deck

The concrete shall be supported and retained at each floor level. Provide edge closures at all edges of the slab of sufficient strength and stiffness to support the wet concrete. Metal closures shall be provided for all openings in composite steel deck 1/8 inch and over, including but not limited to:

2.4.2.1 Cover Plates to Close Panels

Cover plates to close panel edge and end conditions and where panels change direction or abut. Butt joints in composite steel deck may receive a tape joint cover.

2.4.2.2 Column and Truss Closures to Close Openings

Column and truss closures to close openings between steel deck and structural steel columns and structural steel truss members.

2.4.2.3 Sheet Metal

Where deck is cut for passage of pipes, ducts, columns, etc., and deck is to remain exposed, provide a neatly cut sheet metal collar to cover edges of deck. Do not cut deck until after installation of supplemental supports.

2.5 ACCESSORIES

The manufacturer's standard accessories shall be furnished as necessary to complete the deck installation. Metal accessories shall be of the same material as the deck and have minimum design thickness as follows: saddles, 0.0474 inch; welding washers, 0.0598 inch; cant strip, 0.0295 inch; other metal accessories, 0.0358 inch; unless otherwise indicated. Accessories shall include but not be limited to saddles, welding washers, cant strips, butt cover plates, underlapping sleeves, and ridge and valley plates.

PART 3 EXECUTION

3.1 ERECTION

Erection of deck and accessories shall be in accordance with SDI Pub No 29 and SDI-02 and the approved detail drawings. Damaged deck and accessories including material which is permanently stained or contaminated, with burned holes or deformed shall not be installed. The deck units shall be placed on secure supports, properly adjusted, and aligned at right angles to supports before being permanently secured in place. The deck shall not be concreted, nor used for storage or as a working platform until the units have been secured in position. Shoring shall if required by manufacturer or supplier be in position before concrete placement begins in composite or form deck. Loads shall be distributed by appropriate means to prevent damage during construction and to the completed assembly. The maximum uniform distributed storage load shall not exceed the design live load of either composite deck/slab or of the bare deck, as applicable, on which it rests. There shall be no loads suspended directly from the steel deck.

3.2 SHORING

Shoring requirements for placing and curing of concrete in the composite floor and roof deck assemblies shall be as as required by manufacturer or supplier.

3.3 ATTACHMENTS

All fasteners shall be installed in accordance with the manufacturer's recommended procedure, except as otherwise specified. The deck units shall be welded with nominal 3/4 inch diameter puddle welds or fastened with equivalent strength screws, powder-actuated fasteners or pneumatically driven fasteners to supports as indicated on the drawings and in accordance with requirements of SDI Pub No 29. All welding of steel deck shall be in accordance with AWS D1.3 using methods and electrodes as recommended by the manufacturer of the steel deck being used. Welds shall be made only by operators previously qualified by tests prescribed in AWS D1.3 to perform the type of work required. All fastening and welding shall be inspected and tested by Contractor's Testing Agency. Welding washers shall not be used at the connections of the deck to supports. Welding washers shall not

be used at sidelaps. Holes and similar defects will not be acceptable. Deck ends shall be lapped 2 inches. All partial or segments of deck units shall be attached to structural supports in accordance with Section 2.5 of SDI-02. Powder-actuated fasteners shall be driven with a low-velocity piston tool by an operator authorized by the manufacturer of the piston tool. Pneumatically driven fasteners shall be driven with a low-velocity fastening tool and shall comply with the manufacturer's recommendations. Headed stud shear connectors shall be attached as shown and shall be welded as per AWS D1.1 through the steel deck to the steel member, or directly to the steel member where shown or called for.

3.4 HEADED STUD WELDING REQUIREMENTS

Contractor's testing agency shall conduct test welding procedure for welding of headed studs.

Headed studs shall be applied in accordance with manufacturer's printed instructions. Use only personnel and equipment authorized by manufacturer.

Check headed studs for indications of insufficient and improper weld:

1. Less than 360 degree fillet for headed studs.

2. Burn-off (reduction in length after welding) less than 1/8 in.

3. Cold appearance of weld.

If, after welding of any headed stud, visual inspection indicates any imperfections listed above or any other questionable appearances, such shear connector shall be struck hard with three-pound hammer and bent 15 degrees off perpendiculat to beam and toward nearest end of beam. Headed studs meeting this test shall be considered acceptable and left in this position. Headed studs failing this test shall be replaced.

Personnel welding headed studs shall be qualified using elements of above procedure, prior to any production welding of headed studs.

3.5 HOLES AND OPENINGS

All holes and openings required shall be coordinated with the drawings, specifications, and other trades. Holes and openings shall be drilled or cut, reinforced and framed as indicated on the drawings or described in the specifications and as required for rigidity and load capacity. Holes and openings less than 6 inches across require no reinforcement. Holes and openings 6 to 12 inches across shall be reinforced by 0.0474 inch thick steel sheet at least 12 inches wider and longer than the opening and be fastened to the steel deck at each corner of the sheet and at a maximum of 4 inches on center. Holes and openings larger than 12 inches shall be reinforced by steel angles installed perpendicular to the steel beams and supported by the adjacent steel beams. Steel angles shall be installed perpendicular to the deck ribs and shall be fastened to the angles perpendicular to the steel beams. Openings must not interfere with seismic members such as chords and drag struts.

3.6 PREPARATION OF FIRE-PROOFED SURFACES

Deck surfaces, both composite and noncomposite, which are to receive sprayed-on fireproofing, shall be galvanized and shall be free of all grease, mill oil, paraffin, dirt, salt, and other contaminants which impair adhesion of the fireproofing. Any required cleaning shall be done prior to steel deck installation using a cleaning method that is compatible with the subsequent sprayed-on fireproofing, or paint where applicable per Section 09900.

-- End of Section --

SECTION 05400

COLD-FORMED METAL FRAMING

PART 1 GENERAL

1.1 REFERENCES

The publications listed below form a part of this specification to the extent referenced. The publications are referred to in the text by basic designation only.

American Institute of Steel Construction (AISC)

AISC Code	Code of Standard Practice for Steel Buildings and Bridges
AISC Specification	Specification for the Design, Fabrication and Erection of Structural Steel for Buildings

American Iron and Steel Institute (AISI)

AISI Specifications	Specifications for the Design of Light Gage Cold-Formed Steel Structural Members

American Society for Testing and Materials (ASTM)

ASTM A446	Steel Sheet, Zinc-Coated (Galvanized) by the Hot-Dip Process, Structural (Physical) Quality
ASTM A525	General Requirements for Steel Sheet, Zinc-Coated (Galvanized) by the Hot-Dip Process
ASTM A780	Repair of Damaged Hot-Dip Galvanized Coatings

American Welding Society (AWS)

AWS D1.3	Structural Welding Code - Sheet Steel

Steel Structures Painting Council (SSPC)

SSPC Manual	Painting Manual - Volumes 1 and 2

1.2 SUBMITTALS

Government approval is required for submittals with a "GA" designation;

submittals having an "FIO" designation are for information only. The following shall be submitted in accordance with Section 01330 SUBMITTAL PROCEDURES:

SD-01 Data

Product Data; FIO.

Submit manufacturer's product data for all components to be used in the construction and anchoring of the light gauge steel framing. Include specifications, installation instructions, and data substantiating that the materials comply with specified requirements.

SD-04 Drawings

Shop Drawings and Design Computations; GA.

Engage the services of a Professional Engineer registered in the State of New York to prepare complete shop drawings and structural design computations for work of this Section. Drawings and computations shall bear the engineer's professional seal.

Note: Manufacturer's shop drawings reviewed and stamped by the engineer are acceptable instead of those actually prepared by the engineer.

The shop drawings shall show all pertinent details of construction, installation, and anchorage of the light gauge steel framing work.

The structural design computations shall provide a complete structural analysis of all typical and special conditions of construction, and shall certify conformance to the governing laws and building code.

SD-14 Samples

Light Gage Steel Framing Components; GA.

Submit representative samples of all light gauge steel framing components for approval.

1.3 QUALITY ASSURANCE

All work shall comply with the governing laws and building code and applicable provisions of the following standards:

1. AISC Specification.
2. AISC Code.
3. AWS D1.3.
4. AISI Specifications.
5. SSPC Manual.

Materials and workmanship shall be subject to inspection and testing in mill, shop, and/or field by the Contracting Officer or a designated independent testing laboratory.

1.4 SCOPE OF WORK

Work of this Section includes, but is not limited to, the following:

1. Exterior framing at parapets, designed and engineered for 64 psf suction and 27 psf pressure due to wind loading;
2. Interior wall framing at locations indicated on Drawings, including Atrium and Gymnasium walls as required by Partition Types, designed and engineered for a minimum 5 psf (positive or negative) lateral load;

1.5 QUALIFICATIONS OF WELDERS

Welders shall be qualified for the work by tests as prescribed in AWS D1.3 and shall submit certification of such qualifications to the Contracting Officer before beginning of this work.

1.6 QUALIFICATIONS OF SUBCONTRACTOR

The light gauge steel framing subcontractor shall have at least three years experience in the fabrication and erection of light gauge steel framing systems of scope and design comparable to the required work.

1.7 DESIGN

The information shown on the Drawings is intended to establish the sizes of framing members, their points of attachment, the materials to which they are to be attached, and materials which are to be attached to them. Within these limitations it is the responsibility of the contractor to design the framing to withstand the applied loading required by US Army Technical Manuals, the applied loads of the systems and materials supported, and as specified, except where more stricter requirements are specified herein. The maximum allowable deflection of the light-gauge steel stud wall and parapet systems under full lateral load shall be L/600. The Maximum Allowable deflection of light gauge steel floor or roof framing, under full Load shall be L/600. Structural properties of members shall be computed in accordance with AISI Specifications. No composite action is to be considered between the studs or joists and any collateral wall or floor material.

Where gauges of members have been indicated they shall be assumed to be the minimum acceptable. Where the spacing of members has been indicated it shall be assumed to be the maximum acceptable.

1.8 INSPECTION, TESTING, AND QUALITY CONTROL

Inspection and testing of welded connections will be performed by an approved independent testing laboratory, under contract with the General Contractor. Welded connections shall be subjected to inspection and testing in shop and field by the testing laboratory.

Notify the Contracting Officer and testing laboratory prior to start of any fabrication, erection, or other phase of work requiring welded connections so as to afford them reasonable opportunity to inspect work.

Facilitate inspection and testing by testing laboratory. Contractor shall, upon request and at his own expense, furnish testing laboratory with:

1. Complete sets of approved Shop Drawings and corrective work procedures at shop(s) and in field.

2. Representative sample pieces of materials requested for testing.

Testing laboratory shall inspect welded connections for burned welds, adequate size and length of welds, and general appearance and integrity of welds.

Do not remove any marks or tags applied by testing laboratory identifying rejected work.

Welded connections which have been rejected by the testing laboratory in shop or field shall be corrected without delay and at no expense to Owner.

Acceptance of work in shop shall not prevent final rejection of work at job site, even after erection, if work is found to be defective in any way.

1.9 STORAGE AND HANDLING

Protect metal framing units from weather and damage. Deliver to the fabrication site in manufacturer's unopened containers or bundles, fully identified with name, brand, type, and grade. Store off the ground in a dry ventilated space or protect with suitable waterproof coverings.

PART 2 PRODUCTS

2.1 FRAMING COMPONENTS

2.1.1 Studs and Joists:

Studs and Joists shall be 16 gauge minimum or heavier punched C-studs of sizes indicated on the Drawings. Studs and joists shall be manufactured from steel meeting the requirements of ASTM A446, Grade D with a minimum yield strength of 50,000 psi. Studs and joists shall be hot dip galvanized in accordance with ASTM A525, G 60 Coating Designation.

2.1.2 Tracks:

Tracks shall be 18 gauge or heavier unpunched tracks manufactured of commercial quality steel sheet meeting the requirements of ASTM A446 with a minimum yield strength of 50,000 psi. Tracks shall be hot dip galvanized in accordance with ASTM A525, G 60 Coating Designation. Provide special shaped tracks and deflection tracks as indicated and as required to accommodate structural deflections of up to 1 inch.

2.1.3 Bridging:

Bridging shall be manufacturer's recommended type as required to meet the design criteria specified herein.

2.1.4 Attachments, Closure Angles, Etc.:

Attachment angles, closure angles, and other miscellaneous components shall be manufactured of commercial quality steel sheet meeting the requirements of ASTM A446 with a minimum yield strength of 50,000 psi and shall be formed to profiles as required. All components shall be hot dip galvanized in accordance with ASTM A525, G 60 Coating Designation.

2.2 FASTENERS

Framing components shall be fastened to each other by welding only.

1. Electrodes for welding shall conform to AWS requirements for welding low carbon steel. Manufacturer shall furnish instructions with each container of electrodes giving recommended voltage, amperage, polarity of direct current, for all uses and positions for which electrode is suitable.

Fastening to structural steel shall be done with powder activated fasteners, self-drilling screws, or bolts of size and spacing as required to resist the shear and pullout forces generated by the loads applied as required by this Section.

2.3 ZINC RICH PAINT

Zinc rich paint for touch up repair of galvanized coatings damaged during handling and erection and field welding shall conform to ASTM A780 for zinc-rich primer.

PART 3 EXECUTION

3.1 FABRICATION

Light gauge steel framing shall be field assembled.

Prior to commencement of fabrication, submit fabrication and erection drawings for approval as specified under Submittal Paragraph of this Section.

Contractor shall coordinate framing locations with the following:

1. Mechanical and electrical systems.

2. Light gauge steel framing and gypsum drywall work to insure proper support for gypsum drywall.

Metal framing shall be fabricated in accordance with manufacturer's printed or written instructions, unless otherwise indicated.

Framing components shall be straight and true prior to fabrication. Flattening or straightening of components shall be done by a process not injurious to materials.

Framing components shall be cut squarely (or on an angle as with bracing) to fit squarely against abutting members.

No splices will be allowed in studs or joists. Stud tracks shall be continuous, with splices butt welded.

Provide lateral bracing and bridging to manufacturer's specifications and recommendations as required by design loads specified in this Section.

Provide all angles, clips, and other miscellaneous pieces necessary to attach light gauge framing to building structure or to attach other materials to cold-formed metal framing.

Provide deflection tracks at head of panels spanning between floors or floor and roof. Where attachment surfaces are fireproofed, provide z-clips at 24 inches on center between framing and structural support prior to fireproofing to allow the fireproofing to extend uninterrupted by the framing.

Cut all openings in light gauge framing required for ducts, grilles, pipes, windows, doors, and other openings as required.

Components shall be set square and in line and shall be held firmly in position until properly fastened.

Panel components shall be joined by welding.

1. Welders shall be grade certified for the weight and type of materials and the type of equipment being used.

2. Welding shall be done in accordance with AWS D1.3.

Finished assemblies shall be free from twists, bends, or open joints with all members straight, square, and true to line.

3.2 ERECTION

Light gauge steel framing shall be erected by approved methods using equipment of adequate capacity to safely perform the work.

Any damage to other building materials caused by erection of light gauge steel framing shall be repaired or replaced as directed by Contracting Officer at this Contractor's expense.

Contractor shall be responsible for checking dimensions and assuring fit of all members and panels before erection begins.

Work shall be erected plumb, level, and to dimensions and elevations indicated.

Do not install any member or panel which is bent or racked. Such panels shall be replaced.

During erection, install steel cables with turnbuckles in sufficient number

to prevent distortion and damage to framing due to wind or erection forces until erection is complete. These cables may be used to plumb and line the work.

Bottom tracks which bear on concrete shall be set in a heavy trowel coat of mastic.

Tracks providing anchorage for studs shall be anchored to steel or concrete as required by design loads but not over 2 ft.- 0 in. No piece of track shall have less than two anchors.

Where panels are attached to steel with a continuous attachment angle, the attachment angle shall be welded to each stud and shall be fastened to structural steel support as required by design loads, but not less than 2 ft.- 0 in. o.c.

3.3 FIELD TOUCH UP

Touch up all field welds and abrasions of galvanized materials with zinc rich paint in accordance with ASTM A780, Annex A2.

Touch up work shall be complete prior to attachment of the work of any other sections to the light gauge steel framing.

-- End of Section --

SECTION 05500

MISCELLANEOUS METAL

PART 1 GENERAL

1.1 REFERENCES

The publications listed below form a part of this specification to the extent referenced. The publications are referred to in the text by basic designation only.

AMERICAN NATIONAL STANDARDS INSTITUTE (ANSI)

ANSI A14.3	(1992) Ladders - Fixed - Safety Requirements

AMERICAN SOCIETY FOR TESTING AND MATERIALS (ASTM)

ASTM A 36	(1996) Carbon Structural Steel
ASTM A 53	(1996) Pipe, Steel, Black and Hot-Dipped, Zinc-Coated, Welded and Seamless
ASTM A 123	(1989a) Zinc (Hot-Dip Galvanized) Coatings on Iron and Steel Products
ASTM A 500	(1993) Cold-Formed Welded and Seamless Carbon Steel Structural Tubing in Rounds and Shapes
ASTM A 653	(1996) Steel Sheet, Zinc-Coated (Galvanized) or Zinc-Iron Alloy-Coated (Galvannealed) by the Hot-Dip Process
ASTM A 924	(1996a) Steel Sheet, Metallic-Coated by the Hot-Dip Process
ASTM B 26	(1998) Specification for Aluminum-Alloy Sand Castings
ASTM B 209	(1995) Specification for Aluminum and Aluminum-Alloy Sheet and Plate
ASTM B 221	(1996) Specification for Aluminum-Alloy Extruded Bars, Rods, Wire, Profiles, and Tubes
ASTM B 247	(1995) Specification for Aluminum and Aluminum-Alloy Die Forgings, Hand Forgings, and Roll Ring Forgings

ASTM B 429 (1995) Specification for Aluminum-Alloy Extruded Structural Pipe and Tube

AMERICAN WELDING SOCIETY (AWS)

AWS D1.1 (1994) Structural Welding Code - Steel

NATIONAL ASSOCIATION OF ARCHITECTURAL METAL MANUFACTURERS (NAAMM)

NAAMM MBG 531 (1993) Metal Bar Grating Manual

NAAMM MBG 532 (1988) Heavy Duty Metal Bar Grating Manua

1.2 SUBMITTALS

Government approval is required for submittals with a "GA" designation; submittals having an "FIO" designation are for information only. The following shall be submitted in accordance with Section 01330 SUBMITTAL PROCEDURES:

SD-04 Drawings

Miscellaneous Metal Items; GA.

Detail drawings indicating material thickness, type, grade, and class; dimensions; and construction details. Drawings shall include catalog cuts, erection details, manufacturer's descriptive data and installation instructions, and templates. Drawings shall be stamped and sealed by a structural engineer licensed to practice in the State of New York. Detail drawings for the following items:

1. Metal pan and bent-plate stair systems, including supplementary support framing.
2. Spiral stair systems.
3. Steel handrails, guardrails, and railings.
4. Relieving angles.
5. Loose steel lintels.
6. Ladders.
7. Miscellaneous framing and supports for the following:

    a. Overhead doors and grilles.
    b. Folding partitions.
    c. Operable walls and partitions.
    d. Framing, platforms, and supports for equipment, including cooling tower support framing .
    e. Climbing wall tube steel supports (Option OP04).
    f. Boxing/Heavybag support steel.
    g. Half-height Partitions/Support Steel.
    h. Lateral restraint steel for masonry partitions.
    i. Counter and bench supports.
    j. Exterior canopy framing and supports.

8. Elevator subsill angles and guide rail brackets.
9. Concrete filled steel pipe bollards.
10. Metal bar gratings, including sump pit covers.
11. Expansion joint covers.
12. Prefabricated metal curbs.
13. Roof scuttles.
14. Perforated steel sheet at guardrails and at smoke exhaust plenums.
15. Trench drains at pool decks.
16. Stainless steel boot racks and weight racks
17. Penthouse wall framing.
18. Prefabricated metal roof curb.
19. Atrium smoke exhaust grilles.
20. Access doors.

SD-09 Reports

Structural Calculations; FIO.

Where work of this Section is is specified herein to comply with certain design loadings, provide professionally prepared calculations, material properties, certification, and other information required for structural analysis of performance of work. Calculations shall be stamped and sealed by a structural engineer licensed to practice in the State of New York.

SD-13 Certificates

Welders Certification; FIO.

Provide certifications, signed by Contractor, certifying that welders employed at project comply with requirements specified under AWS D1.1 and AWS D1.3.

SD-14 Samples

Color Samples; GA.

Color samples for all items specified herein to be shop finished. Samples shall be minimum 6 inch square size.

1.3 SCOPE OF WORK

The work of this Section includes, but is not limited to the following:

1. Metal pan and bent-plate stair systems, including supplementary support framing.
2. Spiral stair systems.
3. Steel handrails, guardrails, and railings.
4. Relieving angles.
5. Loose steel lintels.
6. Ladders.
7. Miscellaneous framing and supports for the following:

    a. Overhead doors and grilles.
    b. Folding partitions.

c. Operable walls and partitions.
d. Penetration framing.
e. Framing, platforms, and supports for equipment, including cooling tower support framing .
f. Climbing wall tube steel supports (Option OP04).
g. Boxing/Heavybag support steel.
h. Half-height Partitions/Support Steel.
i. Lateral restraint steel for masonry partitions.
j. Counter and bench supports.
k. Exterior canopy framing and supports.

8. Elevator subsill angles and guide rail brackets.
9. Concrete filled steel pipe bollards.
10. Metal bar gratings.
11. Expansion joint covers.
12. Prefabricated metal curbs.
13. Roof scuttles.
14. Perforated steel sheet at guardrails and at smoke exhaust plenums.
15. Miscellaneous bearing and leveling plates.
16. Trench drains at pool decks.
17. Stainless steel boot racks and weight racks.
18. Penthouse wall framing.
19. Hot-dip galvanizing of exterior miscellaneous metals.
20. Atrium smoke exhaust grilles.
21. Access doors.
22. Shop painting of miscellaneous metals as specified herein.

1.4 GENERAL REQUIREMENTS

The Contractor shall verify all measurements and shall take all field measurements necessary before fabrication. Welding to or on structural steel shall be in accordance with AWS D1.1. Items specified to be galvanized, when practicable and not indicated otherwise, shall be hot-dip galvanized after fabrication. Galvanizing shall be in accordance with ASTM A 123, ASTM A 653, or ASTM A 924, as applicable. Hot-dip galvanized items that are exposed to view in the finished work, shall receive a coat of shop primer and shop top-coat. Exposed fastenings shall be compatible materials, shall generally match in color and finish, and shall harmonize with the material to which fastenings are applied. Materials and parts necessary to complete each item, even though such work is not definitely shown or specified, shall be included. Poor matching of holes for fasteners shall be cause for rejection. Fastenings shall be concealed where practicable. Thickness of metal and details of assembly and supports shall provide the specified and required strength and stiffness. Joints exposed to the weather shall be formed to exclude water.

1.5 QUALITY ASSURANCE

1.5.1 Engineering:

Provide services of a professional engineer, registered in State of New York, to design and certify that work of this Section meets or exceeds performance requirements specified.

1.5.2 Shop Fabrication:

Shop fabricate work to greatest extent possible. Label each piece in shop to facilitate field assembly.

1.5.3 Welding:

Perform welding in conformance with AWS D1.1 and D1.3. as applicable.

1.5.4 Environmental Requirements for Shop Painting of Hot Dip Galvanized Steel:

Apply all intermediate and finish coatings under conditions within the following tolerances:

1. Air temperature 50 degrees F min., 90 degrees F max.
2. Surface temperature 50 degrees min., 100 degrees F max.
3. Relative Humidity 65~ max.

Maintain surface dry and free from dust, dirt, oil, grease or other contaminants.

Keep environment free of airborne dust and dirt until paint is dry.

To ensure compliance with this specification all temperature and humidity levels will be continuously monitored with a recording hydrothermograph. The printed record shall be available for review by the Contracting Officer or its representatives at any time during the contract.

Both the spray and cure facility shall be in full compliance with all applicable Federal, State, Local, OSHA, EPA, and fire regulations.

Spray booth shall have a filtered exhaust.

Cure booth may be heated to elevate paint dry time at the applications option, however strictly comply with the paint manufacturer's instructions. Use an indirect thermostat controlled gas fired forced hot air blower. Infra-red type cure equipment shall not be permitted. Temperature shall not exceed 150 degrees F.

Spray and cure booth shall be protected by a sprinkler system designed in accordance with NFPA #15.

The air in the cure booth shall be continuously monitored by a LEL (lower explosive limit) monitoring device connected to the ventilation system.

1.6 DISSIMILAR MATERIALS

Where dissimilar metals are in contact, or where aluminum is in contact with concrete, mortar, masonry, wet or pressure-treated wood, or absorptive materials subject to wetting, the surfaces shall be protected with a coat of bituminous paint or asphalt varnish.

1.7 WORKMANSHIP

Miscellaneous metalwork shall be well formed to shape and size, with sharp lines and angles and true curves. Drilling and punching shall produce clean true lines and surfaces. Welding shall be continuous along the entire area of contact except where tack welding is permitted. Exposed connections of work in place shall not be tack welded. Exposed welds shall be ground smooth. Exposed surfaces of work in place shall have a smooth finish, and unless otherwise approved, exposed riveting shall be flush. Where tight fits are required, joints shall be milled. Corner joints shall be coped or mitered, well formed, and in true alignment. Work shall be accurately set to established lines and elevations and securely fastened in place. Installation shall be in accordance with manufacturer's installation instructions and approved drawings, cuts, and details.

1.8 ANCHORAGE

Anchorage shall be provided where necessary for fastening miscellaneous metal items securely in place. Anchorage not otherwise specified or indicated shall include slotted inserts made to engage with the anchors, expansion shields, and power-driven fasteners when approved for concrete; toggle bolts and through bolts for masonry; machine and carriage bolts for steel; and lag bolts and screws for wood.

1.9 SHOP PAINTING

Ferrous Metal: Surfaces of ferrous metal except galvanized surfaces, shall be cleaned and shop coated with the manufacturer's standard protective coating unless otherwise specified. Surfaces of items to be embedded in concrete shall not be painted. Items to be finish painted shall be prepared according to manufacturer's recommendations or as specified.

Galvanized Steel: All galvanized steel items specified in this Section, and exposed to view in the completed work shall be shop-primed and shop-top coated within 6 hours of galvanizing.

PART 2 PRODUCTS

2.1 MATERIALS

General: Provide products and materials of new stock, free from defects, and of best commercial quality for each intended purpose.

1. Steel Plates, Shapes, and Bars: ASTM A 36.

2. Steel Tubing: ASTM A 500 Grade B or ASTM A 501, hot or cold rolled, as required for design loading.

3. Steel Pipe: ASTM A 501 or ASTM A 53, schedule 40, Type S (seamless), black except where galvanized is indicated, Grade A for cold-bending.

4. Steel Sheet: ASTM A 366, ASTM A 570, or ASTM A 611, grade required for design loading. Provide perforated steel sheet at stair risers where indicated.

5. Stainless Steel: Comply with following standards and requirements for stainless steel components:

   1.Tubing: ASTM A 554, Grade MT316L, as standard with manufacturer.
   2.Pipe: ASTM A 312, Grade TP316L.
   3.Castings: ASTM A 743, Grade CF 8M or CF 3M.
   4.Plate: ASTM A 666, Type 316L.

6. Red Bronze: Provide bronze pipe conforming to ASTM B 43, alloy UNS No. C23000 (red brass, 85 percent copper) and Seamless Bronze Tubes conforming to ASTM B 135 (ASTM B 135M), alloy UNS No. C23000 (red brass, 85 percent copper).

7. Aluminum: Alloy and temper recommended by aluminum producer and finisher for type of use and finish indicated, and with not less than the strength and durability properties of alloy and temper designated below for each aluminum form required:

   1. Extruded Bars and Shapes: ASTM B 221, alloy 6063-T6.
   2. Extruded Pipe and Tubes: ASTM B 429, alloy 6063-T6.
   3. Plate and Sheet: ASTM B 209, alloy 6061-T6.
   4. Die and Hand Forgings: ASTM B 247, alloy 6061-T6.
   5. Castings: ASTM B 26, alloy A356-T6.

7. Glass Guards for Railings: 1/2 inch tempered glass, conforming to the requirements specified under Section 08810, GLASS AND GLAZING.

8. Iron Castings: ASTM A 47, or A 48, grade and class are manufacturer's options.

9. Bolts and fasteners: ASTM A 307 and ASTM A 325.

10. Steel Bars for Gratings: ASTM A 569 or ASTM A 36.

11. Perforated Steel Sheet: Provide 10 gauge steel perforated sheet, with 5/8 inch diameter perforations at 13/16 inch staggered centers.

12. Wire Mesh Guards: Provide 4 gage, woven wire steel mesh, with 2 inch x 2 inch square openings.

13. Concrete: Concrete fill for steel stair systems is specified in Section 03300, CAST-IN-PLACE CONCRETE. 4,000 psi concrete shall be used.

14. Inserts: Threaded or wedge type, galvanized ferrous castings; either ASTM A 47 malleable iron, or ASTM A 27 cast steel.

15. Provide anchors, bolts, sockets, sleeves, and other parts required for securing each item of work to other construction. Furnish inserts and sleeves to be set into concrete formwork and concrete under Section 03300, CAST-IN-PLACE CONCRETE. Furnish anchors, bolts, and other items required to be built-into masonry under

Section 04200, MASONRY.

a. Anchor bolts, bolts smaller than 5/8 in., and fasteners shall be steel conforming to ASTM A 307. Bolts larger than 5/8 in. shall conform to ASTM A 325.

16. Provide exposed fastenings of same material and finish as metal to which applied, unless otherwise note .

17. Welding rods: Conform to AWS Standards and recommendations of welding rod manufacturer.

18. Grout for Interior Applications: Pre-mixed, non-staining, non-corrosive, non-shrink, non-metallic complying with CE CRD-C-621, Type D.

19. Grout for Exterior Applications: Provide Factory-packaged, non-shrink, non-staining, hydraulic controlled expansion cement formulation for mixing with water at project site. Provide formulation that is resistant to erosion from water exposure without need for protection by a sealer or waterproof coating. Provide Super Por-Rok, Erosion-Resistant Anchoring Cement, manufactured by Minwax Construction Products Division, or equal as approved by Contracting Officer

2.2 ACCESS DOORS AND PANELS

Doors and panels shall be flush type unless otherwise indicated. Frames for access doors shall be fabricated of not lighter than 16 gauge steel with welded joints and finished with anchorage for securing into construction. Access doors shall be a minimum of 14 by 20 inches and of not lighter than 14 gauge steel with stiffened edges, complete with attachments. Access doors shall be hinged to frame and provided with a flush face, screw driver operated latch. Provide fire-rated access doors/panels when receiving construction is required to be fire-rated. Exposed metal surfaces shall have a shop applied prime coat. Exceptions are as follows:

1. Provide access doors and frames fabricated from Type 316L Stainless Steel at all swimming pool areas, swimming pool mechanical rooms, shower areas/rooms, as identified in the Finish Schedule, or as indicated on the Drawings. Stainless Steel gauge shall be 16 gauge for the door panels, and 14 gauge for the frames.

2. At Basement of Hayes Corridor, provide 72 in. x 72 in. double-door access panels equal to Cierra Products Type C-LW.

3. On 1st Floor at the Service Corridor Y110 along the west wall, provide 32 in. x 32 in. galvanized steel access door with aluminum frame equal to Cierra Products Type C-XT. Access door shall have 2 in. of insulation. Door and frame shall be gasketed.

4. In the Atrium on the south wall, provide 20 in. x 20 in. fire rated access panels for access to wall sconces. These panels

shall be latched from the backside.

2.3 FABRICATION; GENERAL

Fabricate work of this Section to be straight, plumb, level and square, and to sizes, shapes and profiles indicated on approved shop drawings. Ease exposed edges. Cut, reinforce, drill and tap metal work as required for proper assembly.

1. Fabricate miscellaneous supports, brackets, braces and the like required to fully complete the work.

2. Obtain loading requirements from suppliers of work to be supported. Design and support systems with a safety factor of at least 6 unless otherwise indicated.

3. Allow for thermal movement resulting from 100°F change in ambient temperature.

4. Shear and punch metals accurately. Remove burrs.

5. Ease exposed edges to a radius of approximately 1/32 in., unless indicated otherwise. Form bent corners to smallest radius possible without causing grain separation or impairing work.

6. Remove sharp or rough areas on exposed traffic surfaces.

7. Weld seams continuously. Spot welding is permitted for temporary welding only.

2.3.1 Work Exposed to View:

For work exposed to view, select materials with special care. Provide materials which are smooth and free of blemishes such as pits, roller marks, trade names, scale and roughness. Fabricate work with uniform hairline joints. Form welded joints and seams continuously. Grind welds flush to be smooth after painting. For exposed fasteners, use hex head bolts or Phillips head machine screws.

2.3.2 Galvanizing:

Hot-dip galvanize all exterior miscellaneous metal fabrications, items located in exterior wall assemblies, and other items indicated to be galvanized, in compliance with ASTM B-6, as specified in ASTM A123 only with the addition to the bath of a predetermined amount of nickel (not less than 0.05% by weight) to counter the affect of high silicon steel. Galvanize after fabrication.

1. Safeguard against embrittlement in conformance with ASTM A143.

2. To safeguard against warpage or distortion of steel members, in conformance with ASTM A384, submit shop drawings of non-standard fabrications, all tubular fabrications, all fabrications involving materials of different thickness. Submit drawings to the

galvanizer prior to fabrication to determine the suitability of the material for galvanizing. To prevent unnecessary damage to the finished coating by field welding the method of connection shall be bolted wherever possible. To insure a smooth even coating pipe rails shall be fabricated from mechanical steel tubing with "slip fit" type connections.

3. Weight of Coating: Weight of all zinc coating shall be 2.0 ounces per sq. ft. minimum.

2.4 EXPANSION JOINT COVER ASSEMBLY FABRICATION

Refer to Section 05800 EXPANSION JOINT COVER ASSEMBLIES for requirements.

2.5 FLOOR GRATINGS FABRICATION

Carbon steel grating shall be designed in accordance with NAAMM MBG 531 or NAAMM MBG 532 as applicable for 150 psf live load requirements. Edges shall be banded with bars 1/4 inch less in height than bearing bars for grating sizes above 3/4 inch. Banding bars shall be flush with the top of bearing grating. Frames shall be of welded steel construction finished to match the grating.

Bar Spacing: 4 inch x 1-3/16 inch.

Bearing Bars: 1-1/2 inch x 1/8 inch.

Material: Painted black steel.

Panel Span: 6 ft.-0 inch, maximum.

Construction: Bearing bars and cross bars are fully welded together

Traffic Surface: Plain.

Removable Grating Sections: Fabricate removable grating sections with banding bars welded to entire perimeter of removable sections. Provide anchors and fasteners for attachment to supports. Provide minimum of four saddle clips for each removable section. Fabricate each clip to fit over two bearing bars. Furnish threaded bolt with nuts and washers for each clip required.

2.6 TRENCH DRAINS AT POOL DECKS

Trench Drains at Pool Decks: Provide trench drains to concrete trade for installation.

1. Trench Drain: Provide ACO Drain FG 100 Fiberglass System, or approved equal. Trench drain shall positively slope to plumbing connections. Provide end caps, gaskets, sealants, adapters and the like required to properly install trench drain system and integrate with plumbing systems.

2. Drain Cover: Provide ACO Model No. 451, perforated stainless

steel drain cover, designed for Class 'A' loading, or approved equal at all trench drains. Secure cover sections with not less than 2 stainless steel screws to drain body.

2.7 HANDRAIL AND GUARDRAIL FABRICATION

2.7.1 Steel Handrails and Guardrails:

Conform to ASTM E 985 for design and engineering for structural performance based on testing performed in accordance with ASTM E 894 and ASTM E 935, using load and deflection values specified below. Design and fabricate handrails and guardrails to support loads as prescribed by the UBC Table 16B. Design maximum deflection of any member under load conditions shall not exceed L/360.

1. Provide members of type, size, style and profile indicated, unless otherwise required to support loads. Provide standard steel pipe rails to greatest extent possible to meet applicable design load requirements.

2. Provide fully welded construction, using internal slip connectors. Grind joints smooth and flush so that joints are invisible after painting.

3. Provide coped joints at member intersections, fully welded all around. Provide mitered connections at square turns unless radius turns are indicated.

4. Provide smooth radii at bends and maintain uniform cross-section throughout with no kinks, cracks, buckling or twisting.

5. Return ends to walls with concealed anchors, except where detailed not to return to wall.

6. Close ends of open sections including pipes, tubes, channels and angles, with 1/8 in. steel plate, or hemispherical fittings.

7. Provide toe boards required by applicable standards, regulations and codes, fabricated to dimensions and details indicated. Where no details or dimensions have been indicated, provide 1/4 in. steel plate extending 4 inches above adjacent walking surface secured to walk surface supporting framing.

8. Provide brackets, flanges, fittings and anchors for connecting railings to railing, railings to floors, landings, stringers, and walls.

9. For railing posts set in concrete, fabricate sleeves from steel pipe not less than 6 in. long, and with an inside diameter not less than 1/2 in. greater than outside diameter of post with a steel plate closure welded to bottom of sleeve. Provide friction fit, removable covers designed to keep sleeves clean and hold top edge of sleeve 1/2 in. below finished surface of concrete.

10. Where removable railing posts are indicated, provide slip-fit sockets fabricated from steel pipe with an inside diameter sized for a close fit with posts, so that deflection of post at top is limited to 1/12 of post height.

General: Fabricate stainless steel handrails and railings to design, dimensions and details shown. Provide members in sizes and profiles indicated, with posts and brackets of size and spacings shown, but not less than required to support indicated design loads.

Fabricate Work to be truly straight, plumb, level and square.

Brackets, Flanges, Fittings and Anchors: Provide brackets, flanges, fittings and anchors for interconnection of stainless steel handrail and railing components to other Work.

Welded Connections: Perform welding to comply with AWS for recommended practices, using method appropriate for metal and finish indicated. Grind exposed welds flush and smooth to blend with adjoining finish metal surfaces.

Bends: Form bends by use of prefabricated elbow fittings and radius bends, as applicable.

Curves: Form simple and compound curves by bending members in jigs designed to produce uniform curvature with uniform profile of member throughout entire bend without buckling, twisting or deforming in any way.

Stainless Steel Components: Provide stainless steel components where indicated.

Glass Infill Panels: Provide glass infill panels where indicated in conformance with Section 08810 Glass and Glazing.

1. Separate glass panels from supporting structure and fasteners by 1/16 in. thick neoprene grommets and pads. Pads shall be continuous between support surfaces and washers and glass and not less than 1 sq. inch in area. Grommets shall be continuous over fastener length where fastener penetrates glass.

2.8 LOOSE STEEL LINTEL FABRICATION

Fabricate lintels from angles or shapes for openings, recesses in walls, where shown, and elsewhere where needed. Provide for minimum of 8 in. bearing at each end. Weld individual angles or shapes together to form composite members where indicated or required. Exposed surfaces of composite members shall be fully welded, filled, and ground smooth.

2.9 LADDER FABRICATION

Ladders shall be steel, fixed rail type in accordance with ANSI A14.3, except as otherwise indicated or specified.

Fabricate ladders for locations shown or required, with dimensions,

spacings, details, and anchorages as required.

1. For elevator pit ladders, comply with ASME A17.1.

2. Siderails: Continuous, 1/2-by-2-1/2-inch steel flat bars, with eased edges, spaced 18 inches apart.

3. Bar Rungs: 3/4-inch- diameter steel bars or 3/4-inch square steel bars, spaced 12 inches o.c.

4. Fit rungs in centerline of side rails; plug-weld and grind smooth on outer rail faces.

5. At ladders to roof surfaces that are accessed over parapet, extend the rails up above the parapet a minimum of 48 inches and across the parapet to an opposing ladder to the roof surface. Provide a bar grate walk surface 6 inches above the parapet extending between the ladders as required by applicable standards, regulations and codes. The vertical/gravity load of the ladders shall be borne by the concrete walkway pads specified in Section 07551 MODIFIED BITUMEN ROOFING. Provide spreader members to distribute the ladder loads evenly, and to conform to roof surface design load capacities.

Support each ladder at top and bottom and not more than 60 inches o.c. with welded or bolted steel brackets. Size brackets to support design loads specified in ANSI A14.3.

Provide nonslip surfaces on top of each rung by coating with abrasive material metallically bonded to rung by a proprietary process. Subject to compliance with requirements, provide one of the following:

1. Mebac; IKG Borden.
2. SLIP-NOT; W. S. Molnar Company.

Galvanize ladders, including brackets and fasteners, in exterior locations and at manholes.

2.10 MISCELLANEOUS

Miscellaneous plates and shapes for items that do not form a part of the structural steel framework, such as lintels, sill angles, miscellaneous mountings, supplementary supports, and frames, shall be provided to complete the work.

2.11 ROOF SCUTTLES

Roof scuttles shall be of galvanized steel not less than 14 gauge, with 3 inch beaded flange welded and ground at corners. Scuttle shall be sized to provide minimum clear opening of 36 by 30 inches. Cover and curb shall be insulated with 1 inch thick rigid insulation covered and protected by galvanized steel liner not less than 26 gauge. The top of the curb shall be minimum 12 inches above surrounding roof surface and equipped with an integral metal cap flashing of the same gauge and metal as the curb, full

welded and ground at corners for weathertightness. Scuttle shall be completely assembled with heavy hinges, compression spring operators enclosed in telescopic tubes, positive snap latch with turn handles on inside and outside and neoprene draft seal. Fasteners shall be provided for padlocking on the inside. The cover shall be equipped with an automatic hold-open arm complete with handle to permit one hand release.

2.12 SAFETY NOSING FABRICATION

Safety nosings shall be of cast aluminum with abrasive surface. Nosing shall be 3 inches wide and terminating at not more than 6 inches from the ends of treads, except nosing for metal pan cement-filled treads shall extend the full length of the tread. Safety nosings shall be provided with anchors not less than 3/4 inch long. Integrally cast mushroom anchors are not acceptable.

2.13 STEEL STAIR FABRICATION

Steel stairs shall be complete with structural or formed channel stringers, bent plate or metal pan cement-filled treads, or precast terrazzo tread/risers; landings, columns, handrails, and necessary bolts and other fastenings as indicated. Structural steel shall conform to ASTM A 36. Risers on stairs with bent plate or metal pan treads shall be deformed to form a sanitary cove to retain the tread concrete. Integral nosings shall have braces extended into the concrete fill. Gratings for treads and landings shall conform to NAAMM MBG 531.

Design and fabricate metal pan stair systems, conforming to size and arrangements shown and required. Comply with NAAMM Metal Stair Manual, except where more stringent requirements are specified. Comply with applicable codes and ordinances relating to fire exit stairs.

1. Design and engineer stair systems to support minimum live uniform load of 100 lb./sq. ft. and a concentrated load of 300 lbs. located so as to cause greatest stress. Design anchors, connections, support brackets and accessories.

2. Verify dimensions in field before fabrication. Accurately determine actual floor-to-floor height so that risers in each run are equal in height within +1/16 in., and so that average height of risers in two adjacent runs do not vary by more than 3/16 in.

3. Provide closures for exposed ends of stringers and wells. Construct platforms of structural steel channel headers and intermediate framing members as required. Fully weld headers to stringers, newels, and framing members.

4. Form metal treads, subtreads, and landings from 12 gage minimum steel sheet. Fully weld treads and platforms to supporting frames.

5. Shop weld and assemble stair system to greatest extent possible. Locate bolted connections in inconspicuous areas.

2.14 SPIRAL STAIR FABRICATION

2.14.1 Manufacturers:

Subject to compliance with requirements, provide products by one of the following:

1. Duvinage Corp.
2. Stair Design, Inc.

2.14.2 Metal Surfaces:

For exposed surfaces, provide materials selected for their surface flatness, smoothness, and freedom from surface blemishes. Do not use materials with exposed pitting, seam marks, roller marks, rolled trade names, or roughness.

2.14.3 Steel Plates, Shapes, and Bars:

ASTM A 36.

2.14.4 Rolled Steel Floor Plate:

ASTM A 786.

2.14.5 Steel Pipe Columns:

ASTM A 53, Schedule 40. Provide Schedule 80 for columns more than 4-1/2 in. in OD and where required to support loads.

2.14.6 Steel Pipe Railings:

ASTM A 53, Schedule 40.

2.14.7 Steel Tubing:

Either cold- or hot-formed steel tubing complying with ASTM A 500 or ASTM A 501.

2.14.8 Gray Iron Castings:

ASTM A 48, Class 30.

2.14.9 Fasteners:

For connecting stair components and for anchoring stairs to other construction, select fasteners of the type, grade, and class required to produce connections capable of withstanding design loadings.

1. For steel and cast iron, use plated fasteners complying with ASTM B 633, Class Fe/Zn 25 for electrodeposited zinc coating.

2.14.10 Miscellaneous Requirements:

1. Tread Design: Steel Radial Grate; equal to Stair Design, Inc. No.

133.

2. Railing Design: 1-1/2 in. diameter steel.

3. Baluster Design: 1 in. round steel.

4. Diameter: 64 in.

5. Riser Quantity: 17.

6. Platform: Standard.

7. Tread Degree: 30.

8. Shop Primer: Manufacturer's standard.

2.15 CATWALK GRATINGS

Metal Bar Grating Fabrication: Fabricate welded galvanized steel bar gratings to comply with ANSI A202.1, with fully welded construction, bearing bar sizes as indicated, and as follows:

1. Traffic Surface: Smooth.

2. Grating Sections: Fabricate grating sections with banding bars welded to entire perimeter of sections. Provide anchors and fasteners for attachment to supports. Provide minimum of four saddle clips for each section. Fabricate each clip to fit over two bearing bars. Furnish threaded bolt with nuts and washers for each clip required.

2.16 STEEL DOOR FRAMES AT OVERHEAD COILING DOORS

Steel door frames built from structural shapes shall be neatly mitered and securely welded at the corners with all welds ground smooth. Jambs shall be provided with 2 by 1/4 by 12 inch bent, adjustable metal anchors spaced not over 2 feet 6 inches on centers. Provision shall be made to stiffen the top member for all spans over 3 feet.

2.17 SHELF AND RELIEVING ANGLE FABRICATION

Fabricate shelf and relieving angles from steel angles and shapes of sizes indicated for attachment to building structure. Fabricate shapes with slotted holes to receive anchor bolts, of sizes and spacings indicated, except where field welding is indicated. If not indicated, provide slots 6 in. from ends and not more than 24 in. on center in field. Align expansion joints in angles with building expansion joints, and with control joints in masonry cavity wall construction.

2.18 ANCHORS FOR EMBEDDED ITEMS

Provide anchors for all items to be embedded in concrete construction. Anchors for embedded items shall be size to support the applied loads including regulation, standard and code required loads. Anchors for

embedding into concrete shall be not less than 2 inch wide by 1/4 inch thick by 12 inch long steel bar formed with 2 inch hooks at each end securely welded to embedded item. 1/2 inch diameter deformed bar reinforcing steel in accordance with Section 03200 CONCRETE REINFORCEMENT may be used on items smaller than 4 inches in any two dimensions. Anchors shall be galvanized as required for embedded item.

2.19 MISCELLANEOUS BEARING AND LEVELING PLATE FABRICATION

Provide miscellaneous loose bearing and leveling plates for steel items bearing on masonry or concrete construction. Fabricate units flat, free from warps or twists, and of required thickness and bearing area. Drill plates to receive anchor bolts as required.

2.20 ELEVATOR SUBSILL AND GUIDERAIL SUPPORT FRAMING FABRICATION

Provide continuous, concealed support angle for elevator sills. Coordinate requirements for size, load, and anchorage with elevator supplier. Space anchors no more than 2 ft. - 0 in. o.c.

Provide guiderail support framing for elevator rails. Coordinate requirements for size, load, and anchorage with elevator supplier. Framing sizes/weights indicated on the drawings shall be considered the minimum size to be provided. Actual member size shall be coordinated with the requirements of the elevator manufacturer and are to be concealed within the partition/wall construction indicated while maintaining the required fire resistance ratings.

2.21 CONCRETE FILLED STEEL PIPE BOLLARDS

Provide minimum 6 in. diameter Schedule 80 steel pipe of length to extend from at least 3 ft. below grade to at least 48 in. above grade, unless otherwise indicated.

2.22 MISCELLANEOUS FRAMING AND SUPPORTS

Design and fabricate miscellaneous framing and supports to adequately support live and dead loads with a safety factor of 5. Provide necessary anchors, inserts, and fasteners. Fabricate support system to carry entire load of work being supported to structure above or below as indicated. Do not transfer any loads to ceiling systems. Coordinate work with other tasks including, but not limited to, ductwork, piping, conduit, and fireproofing.

Cut, drill, and tap units to receive hardware, hangers and similar items.

Coordinate loading and attachment requirements for miscellaneous framing and supports with manufacturers of items being supported.

Steel framing for operable partitions shall be designed and engineered to carry twice the operable partition weight. Include stack/storage areas, seismically and laterally braced to structure above.

2.23 TABLE AND BENCH SUPPORTS

Fabricate counter support brackets to support weight of counter or table, plus an additional 500 lbs. concentrated load located to create greatest stress. Fabricate brackets to be inconspicuous from normal viewing angles, unless otherwise indicated on Drawings. Drill brackets for anchor bolts and fasteners.

2.24 STAINLESS STEEL BOOT RACKS AND WEIGHT RACKS

Fabricate stainless steel boot racks and weight racks using shapes and profiles as indicated on Drawings.

2.25 PENTHOUSE WALL FRAMING

Structural steel tubes and girts at penthouse exterior walls supporting metal wall panels and exterior louvers, shall be fabricated from ASTM A 36 steel pieces.

Penthouse wall framing shall be designed and engineered to resist all loads of supported systems/materials and prescribed by code, including 27 psf wind pressure and 64 psf wind suction. Maximum deflection in any member shall be L/180.

2.26 PREFABRICATED METAL ROOF CURBS

Provide prefabricated metal roof curb products of one of the following manufacturers that meet or exceed the requirements specified:

1. Custom Curb, In .
2. The Pate Co.
3. S&L Manufacturing.
4. ThyCurb/ThyBar Corp.

Prefabricated Metal Roof Curbs: Provide manufacturer's standard units, fabricated from minimum 14 gage galvanized steel units, sized as necessary to coordinate with equipment/materials being supported; formed to be self-supporting off roof decking; 2 in. wide top x 8 in. high above finished roof unless indicated otherwise, with bottom sloped to match deck slope and to provide a level top unless indicated otherwise. 1-1/2 in., 3 lb. density fiberglass insulation for vertical face in formed channels at top and bottom of curb and adhered in place shall be provided. Provide continuous pressure-preservative treated wood blocking in conformance with Section 06100, ROUGH CARPENTRY at top of curbs. Provide 18 gage galvanized steel liner. Provide custom formed connection clips and covers. Provide units with welded corners, and as follows:

1. Curb Type: Insulated, double-walled, minimum 12 in. high with treated wood nailer at top of entire curb perimeter.
2. Counter-Flashing: Provide counter-flashing coordinated with roofing system and sheet metal flashing.

2.27 Atrium Smoke Exhaust Grille Fabrication

Provide Atrium Smoke Exhaust Grilles, fabricated from aluminum tube frames

and aluminum slat grilles. Provide Intertec Model No. SL-212-K manufactured by Intertec, Division of Doralco, Alsip, IL 60803, or approved equal

2.28 METAL FINISHING

2.28.1 General:

Shop prime all work, except those items indicated to be embedded in concrete, and those items indicated to receive fireproofing. Exterior galvanized items specified in this Paragraph shall be shop-primed and finished. Field touch-up shop applied coatings after installation.

2.28.2 Shop Priming of Non-Galvanized Steel Items

Scope: Shop prime all interior non-galvanized items (except interior handrail and railing assemblies) in accordance with this paragraph.

Prepare work for shop priming in compliance with SSPC SP6.

Provide 1 mil dry film thickness of rust inhibitive primer over properly prepared, non-galvanized and/or non-fireproofed surfaces. Provide two coats with 2 mils total dry film thickness for surfaces which are inaccessible after assembly or erection.

Primer for Non-Galvanized Ferrous Surfaces : Provide high-quality, lead-free, rust-inhibitive primer, equal to one of the following:

1. Series 10 Metal Primer, Tnemec.
2. Bar-ox Quick Dry Universal Primer; Devoe and Raynolds.
3. Ironclad Retardo; Benjamin Moore.

2.28.3 Shop Primer for Interior Ferrous Handrail and Railing Assemblies:

Scope: Shop prime all interior handrail and railing assemblies in accordance with this paragraph.

Prepare work for shop priming in compliance with SSPC SP6.

Provide 2 mil dry film thickness of specified primer over properly prepared surfaces.

Provide one of the following:

1. Series No. 27-1211; Tnemec.
2. International Protective Coatings Equal.
3. Valspar equal.

2.28.4 Galvanizing:

All ferrous metal under this Section for exterior use, including loose steel lintels and shelf angles in exterior masonry walls, exterior steel handrails and guardrails,exterior ladders and ladders in manholes, exterior canopy framing and supports, steel bollards, exterior steel gratings,in

addition to any interior items specifically so specified, and for items located in Pool areas, and including all bolts, nuts, washers, and other related ferrous metal items used therewith, shall be hot-dip galvanized by dipping into a bath of molten zinc to which at least 0.5% nickel and other state of the art alloys have been added.

1. Hot-dip galvanizing process shall comply with ASTM A123, A153, A385, and A386 as applicable. After galvanizing, processed items shall be straightened to remove all warpage and distortion caused by the process.

2. Furnish a certified statement that galvanizing complies fully with this Specification. Unpainted galvanized steel shall bear mill stamp.

2.28.5 Touch-Up for Galvanized Surfaces:

Touch-up damaged or abraded galvanized surfaces with products equal to one of the following:

1. Cold Galvanizing Compound; ZRC.
2. Speedhide Galvanized Steel Paint; PPG.
3. Series 90-97; Tnemec.

2.28.6 Shop Painting of Galvanized Steel:

Galvanized Surfaces: Galvanized steel lintels and relieving angles exposed to view; exterior galvanized canopy supports and framing; galvanized steel handrails, guardrails and railings; and galvanized steel bollards shall be shop painted at the galvanizer's plant with high-performance epoxy primer and polyurethane top coat. Primer shall be applied within 6 hours of galvanizing.

1. Primer: Within 6 hours after the galvanizing process has been completed, galvanized steel items listed above shall be thoroughly cleaned, pretreated for positive paint adhesion, and then given one coat of galvanizing processor's performance-guaranteed polyamide-epoxy primer, "Primergalv" by Duncan Industries, or equivalent by Tnemec Co., Carboline Co., or DuPont Co., as approved by Contracting Officer, at the galvanizing plant, in strict accordance with manufacturer's published specification standards.

2. Polyurethane Top Coat: Top coat applied over epoxy primer coat shall be Acrylic Polyurethane Enamel equal to Duncan "Colorgalv", Tnemec Series 74 Endura Shield III, DuPont Imron 333 or Hempel's 551U Urethane. Dry film thickness shall be 1.5-2.5 mils.

2.28.7 Isolation Coating:

Bituminous-based paint for electrolytic isolation shall be cold applied black asphaltic mastic conforming to SSPC Paint 12, with no asbestos fibers

2.28.8 Stainless Steel Finishes

Remove or blend tool and die marks and stretch lines into finish.

Grind and polish surfaces to produce uniform, directionally textured, polished finish indicated, free of cross scratches. Run grain with long dimension of each piece.

Bright, Directional Polish: No. 4 finish.

2.28.9 Aluminum Atrium Smoke Exhaust Grille Finish

Comply with NAAMM "Metal Finishes Manual" for recommendations relative to applying and designating finishes.

Finish designations prefixed by AA conform to the system established by the Aluminum Association for designating aluminum finishes.

Finish aluminum windows to match other aluminum components on the project, including curtain wall framing; louvers; and exterior metal wall panels.

High-Performance Organic Coating Finish: AA-C12C42R1x (Chemical Finish: cleaned with inhibited chemicals; Chemical Finish: acid chromate-fluoride-phosphate conversion coating; Organic Coating: as specified below). Prepare, pretreat, and apply coating to exposed metal surfaces to comply with coating and resin manufacturer's instructions.

1. Fluoropolymer 2-Coat Coating System: 2-coat, thermocured system composed of specially formulated inhibitive primer and fluoropolymer color topcoat containing not less than 70 percent polyvinylidene fluoride resin by weight; complying with AAMA 605.2.

2. Color and Gloss: Custom color, as indicated in Section 09915, COLOR SCHEDULE.

PART 3 EXECUTION

3.1 GENERAL INSTALLATION REQUIREMENTS

All items shall be installed at the locations shown and according to the manufacturer's recommendations. Items listed below require additional procedures as specified.

3.1.1 Fastening to In-Place Construction:

Provide anchorage devices and fasteners necessary for securing work of this Section to in-place construction. Include threaded fasteners for concrete and masonry inserts, toggle bolts, through bolts, lag bolts, wood screws, and other connectors required.

3.1.2 Cutting, Fitting, and Placement:

Perform cutting, drilling, and fitting required for installation of work of this Section.

Erect work square, plumb and true, accurately fitted, and with tight joints and intersections. All anchors, inserts and other members to be set in concrete or masonry shall be furnished loose by this trade to be built-into concrete and masonry by those trades. Avoid field cutting or drilling to greatest extent possible.

Brace work rigid and secure to surrounding construction. Provide temporary bracing or anchors where required.

Fit exposed connections accurately together to form hairline joints. Shop weld connections, except when work cannot be shop welded due to shipping size or galvanizing limitations.

3.1.3 Field Welding:

Comply with AWS D1.1 and D1.2 for procedures of manual metal-arc welding, appearance and quality of welds, and correction methods for defective welds.

3.1.4 Grouting:

Where members other than expansion bolts or inserts are fastened into concrete, set such members in proprietary-type expanding grout manufactured specifically for such purpose. Use grouts strictly in accordance with manufacturer's directions. Form to receive members with galvanized metal sleeves, or other approved method to provide at least 1/2 in. clearance around entire perimeter. At exposed applications, hold expanding grout back 1/2 in. from finish surface and fill voids with Portland cement grout to match color and texture of surrounding concrete surface.

3.1.5 Electrolytic Isolation:

Where dissimilar metals are to come into contact with one another, isolate by application of a heavy coating of bituminous paint on contact surfaces in addition to shop coat specified above. Do not permit the bituminous paint in any way to remain on surfaces to be exposed or to receive sealant.

3.2 PREPARATION

Coordinate and furnish anchorage devices, setting drawings, diagrams, templates, instructions, and directions for installation of concrete inserts, sleeves, anchor bolts, and miscellaneous items to be embedded or attached to concrete work, masonry work, or structural steel work.

3.3 INSTALLATION

3.3.1 Loose Steel Lintels:

Furnish loose steel lintels required at masonry openings throughout project to Masonry trade for installation.

3.3.2 Miscellaneous Bearing and Leveling Plates:

Clean concrete and masonry surfaces of bond reducing materials. Roughen surfaces if required to improve bond to surface. Clean bottom surface of

leveling plates immediately prior to installation.

1. Set loose leveling and bearing plates on wedges or other adjustable devices. Tighten anchor bolts after plates have been positioned plumb and level. Pack voids between plates and bearing surfaces solidly with specified grout.

3.3.3 Elevator Metal Work:

Fabricate and install the following metal work at elevators, properly coordinated with work of Elevator trade, and in accordance with approved elevator shop drawings.

1. Steel guide rail brackets at interface with building structure.
2. Steel subsill angle at each hoistway entrance.

3.3.4 Metal Bar Grating Installation:

Install metal gratings in conformance with recommendations of NAAMM Metal Grating Manual for types of gratings and bar sizes indicated, including installation clearances and anchoring details.

3.3.5 Metal Pan and Bent Plate Stair Systems:

Install metal pan and bent plate stair systems as indicated on approved shop drawings. Provide necessary temporary bracing. Fill metal pan stair system treads and landing platforms with concrete where indicated, as specified in Section 03300, CAST-IN-PLACE CONCRETE, or precast terrazzo tread/risers as specified in Section 09446 PRECAST TERRAZZO STAIR TREADS/RISERS. Provide non-slip aggregate finish at concrete fills, spread and tamped into stair and landing surfaces.

3.3.6 Handrails and Guardrails:

Install handrail and guardrail systems as indicated on approved shop drawings. Adjust handrails and guardrails prior to final anchoring and grouting. Plumb posts in all directions. Provide 1-1/2 in. of clearance between walls and handrails, unless otherwise indicated. Provide wall brackets and/or posts as required at spacings indicated, or if not indicated, not more than 6 ft. - 0 in. o.c., or as required to support specified loads.

3.3.7 Ladders:

Install ladders at elevator pits, roofs, utility structures, and elsewhere as required. Anchor ladders to substrates with proper anchorage and fastening devices to support intended loads.

3.3.8 Miscellaneous Items:

Carefully review Drawings for miscellaneous metal items required by various trades but not specifically listed above, such as miscellaneous clip angles, miscellaneous steel bracketing, and other miscellaneous metal items as indicated on Drawings, reasonably implied therefrom, or reasonably

necessary for thorough completion of work.

3.3.9 Counter and Bench Supports:

Secure support brackets to concealed blocking to withstand loads specified.

3.4 REPAIRING, CLEANING, AND PROTECTION

Immediately after erection, clean field welds, bolted connections, and abraded areas of shop paint, and paint exposed surfaces with same material as used for shop painting. Comply with SSPC PA 1.

3.5 ACCESS DOORS AND PANELS

An access door or panel not less than 12 by 12 inches shall be installed directly below each valve, flow indicator, damper, or air splitter that is located above the ceiling, other than an acoustical ceiling; and within walls in front of each valve, flow indicator, damper, or air splitter and that would otherwise not be accessible.

Provide access doors in walls and other surfaces to permit access to all valves, cleanouts, inspection points, junction boxes, connections and other maintenance items. Access doors shall be sized to permit working clearances for tools and equipment required for maintenance and to allow for removal of plugs, valve bodies and the like, but not less than 12 inches wide by 12 inches high.

3.6 PARTITION SUPPORTS AND MASONRY RESTRAINTS

Partition supports shall be set in shoes bolted to the floor and in caps tap-screwed to clip angles in overhead construction, as indicated. Openings shall be formed using channels similar to the partition frames at ducts, pipes, and other obstructions.

Provide access doors in walls and other surfaces to permit access to valves, cleanouts, inspection points, junction boxes, connections and other maintenance items. Access doors shall be sized to permit clearance of tools.

Masonry restraints shall be bolted to floors and overhead construction as indicated.

3.7 INSTALLATION OF SAFETY NOSINGS

Nosing shall be completely embedded in concrete before the initial set of the concrete occurs and shall finish flush with the top of the concrete surface.

3.8 DOOR FRAMES

Door frames shall be secured to the floor slab by means of angle clips and expansion bolts. Continuous door stops shall be welded to the frame or tap screwed with countersunk screws at no more than 18 inchcenters, assuring in either case full contact with the frame. Any necessary reinforcements

shall be made and the frames shall be drilled and tapped as required for hardware.

3.9 INSTALLATION OF TRENCH DRAIN SYSTEM

Trench drain system shall be installed in pool decks as required. Abutting units shall be properly positioned to align with finished pool deck surface and positively drain to plumbing system. Units shall be joined to maintain water tightness. Provide closed end units/end caps at each end of drain. Properly connect trench drain to plumbing system. Abut drain cover sections tightly and secure to drain body.

-- End of Section --

SECTION 05550

STEEL TRUSS EGRESS BRIDGE SUPERSTRUCTURE

PART 1 GENERAL

1.1 SUBMITTALS

Government approval is required for submittals with a "GA" designation; submittals having an "FIO" designation are for information only. The following shall be submitted in accordance with Section 01330 SUBMITTAL PROCEDURES:

SD-01 Data

Product Data; GA.

Submit producer's or manufacturer's Product Data Specifications and installation instructions for following products in accordance with General Provisions. Include laboratory test reports and other data to show compliance with Specifications, (including specified standards).

1. Structural steel (each type), including certified copies of mill reports covering chemical and physical properties.

2. Nonshrink grout.

SD-04 Drawings

Shop Drawings; GA.

Submit Shop Drawings prepared under the supervision of a New York state registered professional structural engineer, including design, and complete details and schedules for fabrication and shop assembly of members, and details, schedules, procedures, and diagrams showing sequence of erection. Shop Drawings shall not be made by using reproductions of Contract Drawings.

Structural steel members for which Shop Drawings have not been reviewed shall not be fabricated. Contracting Officer's review shall cover general locations, spacings, and details of design. Omission from Shop Drawings of any materials required by the Contract Documents shall not relieve the Contractor of the responsibility of furnishing and installing such materials, even though such Shop Drawings may have been returned and reviewed.

1. Include details of cuts, connections, holes, and other pertinent data. Indicate welds by standard AWS symbols, and show size, length, and type of each weld.

2. Provide setting drawings, templates, and directions for

installation of anchor bolts and sleeves, and other anchorages to be installed by other trades.

1.2 DESCRIPTION

Under this work the Contractor shall design, engineer, and fabricate, furnish and erect three (3) pre-engineered, half-through, structural steel truss egress bridge superstructures and other metal parts as shown on the plans and in accordance with the provisions of the contract documents.

Materials for this work shall meet the requirements of the AISC Steel Construction Manual (SCM), and modifications made herein.

Examine Contract Documents for requirements that affect Work of this Section. Other specification Sections that directly relate to Work of this Section include, but are not limited to:

Section 05120, Structural Steel.

Certified copies of tests conducted by the manufacturer shall be furnished to the Contracting Officer in accordance with the requirements of Section 05120, Structural Steel.

1.3 QUALITY ASSURANCE

The Owner reserves the right to use ultrasonic inspection to verify adequacy of all welds. Materials and fabrication procedures are subject to inspection and test in mill, shop, and field, conducted by a qualified inspection agency. Such inspections and tests will not relieve Contractor of responsibility for providing materials and fabrication procedures in compliance with specified requirements. Promptly remove and replace materials of fabricated components which do not comply.

1.3.1 Contractor's testing laboratory services:

Qualifications for welding work; qualify welding operators in accordance with the AWS "Standard Qualification Procedure." Provide certification that welders to be employed in work have satisfactorily passed AWS qualification tests within previous twelve (12) months. If recertification of welders is required, retesting will be Contractor's responsibility.

1.3.2 Codes and Standards:

Work shall comply with provisions of following codes and standards, except as otherwise indicated:

1. AISC Code.
2. AISC Specification.
3. AWS D1.1.

1.3.3 Fabricator Requirements:

Structural steel fabricator shall have not less than five (5) years experience in the fabrication of structural steel for bridges.

The Fabricator shall be responsible for all errors of detailing, fabrication, and for the correct fitting of structural steel members.

1.3.4 Erector Requirements:

Structural steel erector shall have not less than five (5) years experience in the erection of structural steel.

1.3.5 Connections:

All connections shall be shown, in detail, on Shop Drawings, subject to review of the Contracting Officer.

1.3.6 Substitutions:

Substitutions of Sections or modifications of details, or both, and the reasons therefor, shall be submitted with the Shop Drawings for review. Submitted substitutions must be clearly identified and noted as such. Reviewed substitutions, modifications, and necessary changes in related portions of the work shall be coordinated by the fabricator and shall be accomplished at no additional time or cost to the Owner.

1.3.7 Templates:

Shall be furnished by the Fabricator with instructions for the setting of anchor bolts and other anchorage.

1.4 Product Delivery, Storage, And Handling:

Deliver anchor bolts and anchorage devices, which are to be embedded in cast-in-place concrete, in ample time not to delay that work.

Store materials to permit easy access for inspection and identification. Keep steel members off the ground, using pallets, platforms, or other supports. Protect steel members and packaged materials from erosion and deterioration.

Do not store materials on structure in a manner that might cause distortion or damage to members or supporting structures. Repair or replace damaged materials or structures as directed.

1.5 Job Conditions:

Coordinate erection of structural steel with work of other trades.

PART 2 PRODUCTS

2.1 MATERIALS

2.1.1 General:

For fabrication of work which will be exposed to view, use only materials which are smooth and free of surface blemishes including pitting, seam

marks, roller marks, rolled trade names, and roughness. Remove such blemishes by grinding, or by welding and grinding, prior to cleaning, treating and application of surface finishes.

2.1.2 Structural Steel Shapes:

Structural steel shapes shall conform to ASTM A 36 or ASTM A 572.

2.1.3 Structural Tubing:

Structural Tubing conforming to ASTM A 606.

2.1.4 Bridge Bearings:

Conform to NYSDOT Standard Specification Section 716-02, plain elastomeric bridge bearings, and AASHTO Standard Specifications for Bridges, Division I, Section 14, Elastomeric Bearings, and Division II, Section 18, Bearing Devices.

2.1.5 Bridge Trench Drains

Bridge trench drains shall conform with NYSDOT Standard Specification Section 655, Frames and Grates and AASHTO Standard Specifications for Bridges, Division II, Section 23, Miscellaneous Metal.

2.1.6 Test Results:

Certified copies of the results of tests conducted by the manufacturer shall be furnished to the Contracting Officer in accordance with the requirements of Section 05120, Structural Steel.

2.1.7 Welding Electrodes:

Welding electrodes shall conform to the requirements of AWS D1.1., suitable for the steel and intended service.

2.1.8 Nonshrink Grout:

Nonshrink grout shall be pre-mixed non-shrinking, high strength grout. Compressive strength in 28 days shall be 5,000 psi minimum, but in no case less than the specified strength of the adjacent concrete. Manufacturer shall provide evidence that the material meets the requirements of the COE CRD-C 621 (558). Grout permanently exposed to view shall be nonoxidizing; metallic grout may be used in other locations.

2.1.9 Fabrication:

Fabricate and assemble structural assemblies in the shop to greatest extent possible. Structural steel members shall be fabricated in accordance with AISC Specifications.

Properly mark and match-mark materials for field assembly. Fabricate for delivery sequence which will expedite erection and minimize field handling of materials. Where finishing is required, complete assembly, including

welding of units, before start of finishing operations. Provide finish surfaces of members exposed in final structure free of markings, burrs, and other defects.

2.2 SHOP PRIMING

2.2.1 Surface Preparation:

Clean all steel surfaces of steel bridges in accordance with SSPC -SP-6, Commercial Blast Cleaning.

2.2.2 Shop Priming

All Steel at Bridge : Two separate shop primer coats are required; first coat shall be 2.5 to 3.5 DFT of Tnemec Series 90-97 Tneme-Zinc (or equal as manufactured by Ameron or Valspar), followed by the second coat, consisting of 4.0 DFT of Tnemec Series 27-1255 Typoxy (or equal as manufactured by Ameron or Valspar).

PART 3 EXECUTION

3.1 ERECTION, GENERAL

All structural steel work, including, but not limited to: fabrication, inspection, transportation, and erection shall be done in accordance with the provisions of the SCM, except the design and fabrication of welded tubular connections shall be in accordance with the Structural Welding Code - Steel ANSI/AWS/D1.1.

Erector must examine areas and conditions under which structural steelwork is to be installed, and notify Engineer of unacceptable conditions or conditions detrimental to proper and timely completion of work.

3.2 DESIGN AND PERFORMANCE REQUIREMENTS

The superstructure shall be designed by a New York State Licensed Professional Engineer. The shop drawings and computations shall bear the seal of this engineer. Unless amended herein, the existing provisions of the AASHTO Standard Specifications for Highway Bridges, 16th. edition shall apply. The trusses and their connections shall be designed for their self-weight, a minimum dead load of 85 lb./sq. ft. of deck area, and a live load (without impact) of either 100 lb./sq.ft. of pedestrian load or a 2,000 lb. concentrated load, which ever produces the larger stress in a given member. The floor system including floor beams, stringers, and their connections, shall be designed for their self-weight, a minimum dead load of 85 lb./sq. ft. of deck area, and a live load (without impact) of either 100 lb./sq.ft. of pedestrian load or a 2,000 lb. concentrated load, which ever produces the larger stress in a given member. The floor system shall be designed, detailed, and fabricated such that it does not hang down below the trusses.

Note: Live loads as stated above shall be increased by 50% for Bridge #3.

The structure shall be designed to resist a wind load of 65 lb./sq.ft.,

applied horizontally at right angles to the longitudinal axis of the structure. The wind load shall be applied to the projected vertical area of all superstructure elements, including the protective shields and the exposed truss members on the leeward truss. Wind on the live load shall not be considered.

The vertical truss members and the floorbeams and their connections shall be proportioned to resist a lateral force applied at the top of the truss verticals that is not less than 0.01/K times the average design compressive force in the two adjacent top chord members; where K is the design effective length factor for the individual top chord members supported between the truss verticals. In no case shall the value for 0.01/K be less than 0.003 when determining the minimum lateral force, regardless of the K value used to determine the compressive capacity of the top chord. This lateral force shall be applied concurrently with these member's primary forces.

End posts shall be designed as a simple cantilever to carry its applied axial load combined with a lateral load of 1.0% of the axial load, applied at the upper end.

The top chord shall be considered as a column with elastic supports at the panel points. The critical buckling force of the column, so determined, shall be based on not less than 2.0 times the maximum design group loading in any panel in the top chord.

Members shall be designed so that the deflection due to the service pedestrian live load does not exceed 1/500 of the span length.

The minimum thickness provisions of Article 10.8 of the Standard Specifications for Highway Bridges shall apply, except the minimum thickness of closed structural tubular members shall be 1/4 inch.

The structure shall be designed for allowable fatigue stress ranges for wind loading of 100,000 cycles, as determined from Article 10.3 of the Standard Specifications for Highway Bridges, except that the allowable fatigue stress ranges for Redundant Load Path structures may be used regardless of the actual degree of redundancy. Fatigue sensitive details should be avoided, and out of plane bending details should be eliminated. Fillet welds should only be used to transfer shear, and Complete Penetration Groove Welds (CPGW) or Slip Critical Bolted Connections should be used to transfer moment. All field connections for the truss and floor system shall be through the use of high strength bolts, except the connection of the truss to the bearings which will utilize fillet welds.

3.2.1 Building Bearing Capacity

The bridges shall bear at their east ends on the building, and on the west ends on foundation/abutments. Such foundation/abutments shall resist all lateral loads developed by the bridge structures. No lateral loads shall be resisted by the east end of any bridge that is bearing on the building. Dead load, live load and total load capacity limits for each building bearing point shall be as follows:

Building Bearing Capacity

Bridge No.	Bearing Points	Dead Load	Live Load	Total Load
1	2	10 kips	10 kips	20 kips
2	2	9 kips	9 kips	18 kips
3	2	13 kips	21 kips	34 kips

3.2.2 Guardrails

Guardrails shall be provided at sides of bridges in accordance with the requirements of Steel Handrails and Guardrails specified within Section 05500 MISCELLANEOUS METALS, and as indicated. Rails shall be supported by the bridge structure. Rail loads shall be included in the required dead loads and live loads. Rails shall have openings that do not allow a 4 in. diameter sphere to pass through.

3.3 ERECTION

General: Comply with AISC Specification and Code, and as herein specified.

Furnish anchor bolts and other anchorage required for securing structural steel to foundations and other in-place work. Furnish templates and other devices as necessary for presetting bolts and other anchors to accurate locations. Refer to Division 3 of these Specifications for anchor bolt installation requirements in concrete.

Set structural steel accurately to lines and elevations indicated. Align and adjust various members forming a part of a complete frame or structure before permanently fastening. Perform necessary adjustments to compensate for discrepancies in elevations and alignment.

Level and plumb individual members of structure within specified AISC tolerances.

Establish required leveling and plumbing measurements at mean operating temperature of structure. Make allowances for the difference between temperature at time of erection and mean temperature at which the structure will be when completed and in service. Where parts cannot be assembled or fitted properly as a result of errors in fabrication or of deformation due to handling or transportation, such condition shall be immediately reported to the Engineer along with proposed method of correction. The straightening of bends or warps shall be done by approved methods. Bent or damaged heat-treated parts will be rejected.

3.3.1 Testing Laboratory Services For Quality Control:

Inspect all structural steel during fabrication and during and after erection for conformance with Contract Documents and Shop Drawings, using an approved testing laboratory.

3.4 SHOP INSPECTIONS

Examine all steel for straightness and alignment.

Examine all fabricated pieces and checking of same with erection plans and detail drawings.

Examine all shop welding.

Examine all fabricated pieces for proper cleaning.

3.5 FIELD INSPECTION

Proper erection of all pieces.

Plumbness of structure and proper bracing.

Proper welding.

Qualifications of Welders: Provide the testing laboratory with names of welders to be employed on work, together with certification that welders have passed qualification tests within the last year using procedures covered in AWS D1.1.

Inspection of Field Welds shall be in accordance with AWS D1.1.

3.6 TOUCH-UP OF SHOP-PRIMERS

After erection, the field bolt heads and nuts, field welds, and any abrasions in the shop coat shall be cleaned per SSPC SP-3 Hand Tool Cleaning, and then immediately re-primed with paint of the same manufacturer and type as that used for the shop coats.

3.7 CLEAN-UP

Clean-up all debris caused by the work of this Section, keeping the premises clean and neat at all times, as directed by the Contracting Officer.

-- End of Section --

SECTION 05800

EXPANSION JOINT COVER ASSEMBLIES

PART 1 GENERAL

1.1 REFERENCES

The publications listed below form a part of this specification to the extent referenced. The publications are referred to in the text by basic designation only.

AMERICAN SOCIETY FOR TESTING AND MATERIALS (ASTM)

ASTM D 2000	(1998) Classification System for Rubber Products in Automotive Applications
ASTM E 119	(1995a) Fire Tests of Building Construction and Materials
ASTM E 814	(1994b) Fire Tests of Through-Penetration Fire Stop

1.2 SUBMITTALS

Government approval is required for submittals with a "GA" designation; submittals having an "FIO" designation are for information only. The following shall be submitted in accordance with Section 01330 SUBMITTAL PROCEDURES:

SD-01 Data

Expansion Joints; GA.

Product data in form of manufacturer's product specifications, installation instructions, and general recommendations for each type of expansion joint cover assembly indicated.

SD-04 Drawings

Expansion Joint Shop Drawings; GA.

Shop drawings showing full extent of expansion joint cover assemblies; include large-scale details indicating profiles of each type of expansion joint cover assembly, splice joints between sections, joinery with other types, special end conditions, anchorages, fasteners, and relationship to adjoining work and finishes. Include description of materials and finishes.

SD-09 Reports

Material Test Reports; FIO.

Material test reports from qualified independent testing laboratory indicating and interpreting test results relative to compliance of fire-rated expansion joint assemblies with requirements indicated.

SD-14 Samples

Metal Finish Samples; GA.

Samples for each type of metal finish indicated on metal of same thickness and alloy to be used in work. Where normal color and texture variations are to be expected, include 2 or more units in each set of samples showing limits of such variations.

1.3 QUALITY ASSURANCE

1.3.1 Manufacturer's Instructions:

In addition to requirements of these specifications, comply with manufacturer's instructions recommendations for all phases of work, including preparation of substrate, applying materials, and protection of installed units.

1.3.2 Single-Source Responsibility:

Obtain expansion joint cover assemblies from one source from a single manufacturer.

1.3.3 Fire Performance Characteristics:

Where indicated, provide expansion joint cover assemblies identical to those of assemblies whose fire resistance has been determined per ANSI/UL 263, NFPA 251, U.B.C. 43-1, or ASTM E 119 and E 814 including hose stream test at full-rated period by a nationally recognized testing and inspecting organization or by another means, as acceptable to authorities having jurisdiction.

1. Fire Rating: 2 hrs. minimum.

PART 2 PRODUCTS

2.1 EXPANSION JOINT COVER ASSEMBLIES

Manufacturer: Basis-of-Design Products: The design for each expansion joint system specified on the Drawings is based on the products named of Construction Specialties, Inc. Subject to compliance with requirements, provide either the named products or comparable products by one of the following manufacturers listed:

1. Architectural Art Mfg. Inc.
2. Balco, Inc.
3. Construction Specialties, Inc.
4. Metalines, Inc.

5. MM Systems Corp.

2.02 MATERIALS

2.2.1 Metals:

Aluminum: ASTM B 221, alloy 6063-T5 for extrusions; ASTM B 209, alloy 6061-T6, sheet and plate. Protect aluminum surfaces in contact with cementitious materials with zinc chromate primer or chromate conversion coating.

Stainless Steel: ASTM A 666, Type 304 for plates, sheet, and strips.

2.2.2 Nonmetal Products:

Extruded Preformed Seals: Single or multilayered rubber extrusions as classified under ASTM D 2000, designed with or without continuous, longitudinal, internal baffles and formed to fit compatible frames, in color as indicated in Section 09915 COLOR SCHEDULE.

Seismic Seals: Typically two single layered rubber extrusions, one interior and one exterior, as classified under ASTM D 2000, retained in a set of compatible frames, in color indicated, or, if not indicated, as selected by Contracting Officer from manufacturer's standard colors.

Fire Barriers: Designed for indicated or required dynamic structural movement without material degradation or fatigue. Tested in maximum joint width condition with a field splice as a component of an expansion joint cover in accordance with ANSI/UL 263, NFPA 251, U.B.C. 43-1, or ASTM E 119 and E 814 including hose stream test at full-rated period by a nationally recognized testing and inspecting organization or by another means, as acceptable to authorities having jurisdiction.

Accessories: Manufacturer's standard anchors, fasteners, set screws, spacers, flexible vapor seals and filler materials, drain tubes, adhesive, and other accessories compatible with material in contact, as indicated or required for complete installations.

2.3 FABRICATION

2.3.1 General:

Provide expansion joint cover assemblies of design, basic profile, and materials indicated. Select units comparable to those indicated or required to accommodate joint size, variations in adjacent surfaces, and structural movement. Furnish units in longest practicable lengths to minimize number of end joints. Do not use short or cut-off sections to make up lengths. In joining sections to make required lengths, provide minimum number of equal length sections possible with no section shorter than 4 ft. long. Provide hairline joints at corners where joint changes directions or abuts other materials. Include closure materials and transition pieces, tee-joints, corners, curbs, cross-connections, and other accessories as required to provide continuous joint cover assemblies.

2.3.2 Metal Joint Cover Assemblies:

Provide continuous extruded metal frames of profile indicated with seating surface and raised floor rim to accommodate flooring and concealed bolt and steel anchors for embedment in concrete. Provide assemblies formed to receive cover plates of design indicated and to receive filler materials (if any) between raised rim of frame and edge of plate. Furnish depth and configuration to suit type of construction and to produce a continuous flush wearing surface with adjoining finish floor surface.

1. Floor-to-Floor Joints with Exposed Cover: Provide one frame on each side of joint, designed to support floor plate and filler.

2. Flat Cover Plates: Provide cover plates of profile and wearing surface indicated. Extend flat plates to lap each side of joint. If required, furnish abrasive-resistant flexible filler for space between edge of cover plate and raised rim of frame.

   a. Fixed Cover Plates: Attach one side of the cover plate to a frame or finished wearing surface with other side resting on other frame or finished wearing surface in such a manner to allow free movement.

   b. Floating Cover Plates: Secure the cover plate in or on top of frames in such a manner as to have free movement on both sides.

3. Floor Cover Plate Wearing Surfaces: Provide cover plates with plain wearing surface unless otherwise indicated on Drawings.

4. Provide manufacturer's continuous standard flexible vinyl moisture seals under covers at locations indicated.

5. Floor-to-Wall Joints: Provide one frame on floor side of joint only. Provide wall side frame where required by manufacturer's design.

6. Angle Cover Plates: Attach angle cover plates for floor-to-wall joints to wall with countersunk, flat-head exposed fasteners secured to drilled-in-place anchor shields, unless otherwise indicated, at spacing recommended by joint cover manufacturer.

7. Wall, Ceiling, Roof, and Soffit Joint Cover Assemblies:

   a. Fixed Metal Cover Plates: Provide on one side of the joint a concealed, continuously anchored frame fastened to wall, ceiling, or soffit only on one side of joint. Extend cover to lap each side of joint and to permit free movement on one side. Attach cover to frame with cover in close contact with adjacent finish surfaces.

   b. Floating Metal Cover Plates: Secure the cover plate in or on top of frames in such a manner as to have free movement on both sides.

c. Flexible Filler: Secure the approved flexible filler between frames in such a manner that it will compress and expand.

2.3.3 Joint Cover Assembly with Preformed Seal:

Provide joint cover assemblies consisting of continuously anchored aluminum extrusions and continuous extruded preformed seals of profile indicated or required to suit types of installation conditions shown. Furnish extrusions designed for embedment in concrete and mechanical retention of lugs of field-installed extruded preformed seals. Vulcanize or heat-seal splices (if any) to ensure hermetic joint condition.

1. Include extruded aluminum cover plate with fluted surface; fasten plate to one side of joint and extend plate to lap each side of joint, with free movement and with cover in close contact with adjacent contact surfaces.

2.4 METAL FINISHES

2.4.1 General:

Comply with NAAMM "Metal Finishes Manual" for finish designations and application recommendations, except as otherwise indicated. Apply finishes in factory after products are fabricated. Protect finishes on exposed surfaces with protective covering before shipment.

2.4.2 Aluminum Finishes:

Clear Anodized, AA-C22A41; medium matte etched finish with 0.7-mil minimum thick anodic coating.

2.4.3 Stainless Steel Finishes:

Stainless steel shall receive a non-directional, orbital grain finish.

PART 3 EXECUTION

3.1 PREPARATION

Coordinate and furnish anchorages, setting drawings, templates, and instructions for installation of expansion joint cover assemblies to be embedded in concrete or have recesses formed into edges of concrete slab for later placement and grouting-in of frames.

3.2 INSTALLATION

3.2.1 Fastening to In-Place Construction:

Provide anchorage devices and fasteners where necessary for securing expansion joint cover assemblies to in-place construction, including threaded fasteners with drilled-in expansion shields for masonry and concrete where anchoring members are not embedded in concrete. Provide fasteners of metal, type, and size to suit type of construction indicated and provide for secure attachment of expansion joint cover assemblies.

3.2.2 Cutting, Fitting and Placement:

Perform all cutting, drilling, and fitting required for installation of expansion joint covers. Install joint cover assemblies in true alignment and proper relationship to expansion joints and adjoining finished surfaces measured from established lines and levels. Allow adequate free movement for thermal expansion and contraction of metal to avoid buckling. Set floor covers at elevations to be flush with adjacent finished floor materials. Locate wall, ceiling, roof, and soffit covers in continuous contact with adjacent surfaces. Securely attach in place with all required accessories. Locate anchors at interval recommended by manufacturer, but not less than 3 inches from each end and not more than 24 inches on centers.

3.2.3 Joinery and Continuity:

Maintain continuity of expansion joint cover assemblies with end joints held to a minimum and metal members aligned mechanically using splice joints. Cut and fit ends to produce joints that will accommodate thermal expansion and contraction of metal to avoid buckling of frames. Adhere flexible filler materials (if any) to frames with adhesive or pressure-sensitive tape as recommended by manufacturer.

3.2.4 Installation of Extruded Preformed Seals:

Install seals to comply with manufacturer's instructions and with minimum number of end joints. For straight sections provide preformed seals in continuous lengths. Vulcanize or heat-seal all field splice joints in preformed seal material to provide watertight joints using manufacturer's recommended procedures. Apply manufacturer's approved adhesive, epoxy, or lubricant-adhesive to both frame interfaces prior to installing preformed seal. Seal transitions in accordance with manufacturer's instructions.

3.2.5 Installation of Seismic Seals:

Install interior seals in continuous lengths; vulcanize or heat-seal all field splice joints in interior seal material to provide watertight joints using manufacturer's recommended procedures. Install exterior flexible seal in standard lengths. Seal transitions and butt joints in accordance with manufacturer's instructions.

3.2.6

Install fire barriers in accordance with federal, state, and local building codes using manufacturer's recommended procedures. Install transition and end joints to provide continuous fire resistance and in accordance with manufacturer's instructions.

3.3 CLEANING AND PROTECTION

Do not remove strippable protective material until finish work in adjacent areas is complete. When protective material is removed, clean exposed metal surfaces to comply with manufacturer's instructions.

-- End of Section --

SECTION 06100

ROUGH CARPENTRY

PART 1 GENERAL

1.1 REFERENCES

The publications listed below form a part of this specification to the extent referenced. The publications are referred to in the text by basic designation only.

AMERICAN FOREST & PAPER ASSOCIATION (AF&PA)

AF&PA T01	(1997; w/Supple T02) National Design Specification for Wood Construction
AF&PA T11	(1988) Manual for Wood Frame Construction

AMERICAN INSTITUTE OF TIMBER CONSTRUCTION (AITC)

AITC 111	(1979) Recommended Practice for Protection of Structural Glued Laminated Timber During Transit, Storage and Erection

AMERICAN SOCIETY FOR TESTING AND MATERIALS (ASTM)

ASTM A 307	(1994) Carbon Steel Bolts and Studs, 60 000 PSI Tensile Strength
ASTM D 2898	(1994) Accelerated Weathering of Fire-Retardant-Treated Wood for Fire Testing
ASTM F 547	(1977; R 1990) Definitions of Terms Relating to Nails for Use with Wood and Wood-Base Materials

AMERICAN WOOD-PRESERVERS' ASSOCIATION (AWPA)

AWPA C2	(1995) Lumber, Timber, Bridge Ties and Mine Ties - Preservative Treatment by Pressure Processes
AWPA C9	(1995) Plywood - Preservative Treatment by Pressure Processes
AWPA C20	(1993) Structural Lumber Fire-Retardant Pressure Treatment

AWPA C27	(1993) Plywood - Fire-Retardant Pressure Treatment
AWPA M4	(1995) Standard for the Care of Preservative-Treated Wood Products
AWPA P5	(1996) Standards for Waterborne Preservatives

APA - THE ENGINEERED WOOD ASSOCIATION (APA)

APA EWS R540C	(1996) Builder Tips Proper Storage and Handling of Glulam Beams
APA PRP-108	(1994: Rev 1996) Performance Standards and Policies for Structural-Use Panels (Form No. E445Q)

DEPARTMENT OF COMMERCE (DOC)

DOC PS 1	(1996) Voluntary Product Standard - Construction and Industrial Plywood
DOC PS 2	(1992) Performance Standards for Wood-Based Structural-Use Panels

FACTORY MUTUAL ENGINEERING AND RESEARCH (FM)

FM LPD 1-49	(1995) Loss Prevention Data Sheet - Perimeter Flashin

1.2 SUBMITTALS

Government approval is required for submittals with a "GA" designation; submittals having an "FIO" designation are for information only. The following shall be submitted in accordance with Section 01330 SUBMITTAL PROCEDURES:

Nailers and Nailing Strips; FIO.

Drawings of field erection details, including materials and methods of fastening nailers in conformance with Factory Mutual wind uplift rated systems specified in other Sections of these specifications.

SD-13 Certificates

Grading and Marking; FIO.

Manufacturer's certificates (approved by an American Lumber Standards approved agency) attesting that lumber and material not normally grade marked meet the specified requirements. Certificate of Inspection for grade marked material by an American Lumber Standards Committee (ALSC) recognized inspection agency prior to shipment.

1.3 DELIVERY AND STORAGE

Materials shall be delivered to the site in undamaged condition, stored off ground in fully covered, well ventilated areas, and protected from extreme changes in temperature and humidity. Laminated timber shall be handled and stored in accordance with AITC 111 or APA EWS R540C.

PART 2 PRODUCTS

2.1 LUMBER AND SHEATHING

2.1.1 Grading and Marking

2.1.1.1 Lumber Products

Solid sawn and finger-jointed lumber shall bear an authorized gradestamp or grademark recognized by ALSC, or an ALSC recognized certification stamp, mark, or hammerbrand. Surfaces that are to be exposed to view shall not bear grademarks, stamps, or any type of identifying mark. Hammer marking will be permitted on timbers when all surfaces will be exposed to view.

2.1.1.2 Plywood and Other Sheathing Products

Materials shall bear the grademark or other identifying marks indicating grades of material and rules or standards under which produced, including requirements for qualifications and authority of the inspection organization. Except for plywood and structural-use panels, bundle marking will be permitted in lieu of marking each individual piece. Surfaces that are to be exposed to view shall not bear grademarks or other types of identifying marks.

2.1.2 Sizes

Lumber and material sizes shall conform to requirements of the rules or standards under which produced. Unless otherwise specified, lumber shall be surfaced on four sides. Unless otherwise specified, sizes indicated are nominal sizes, and actual sizes shall be within manufacturing tolerances allowed by the standard under which the product is produced.

2.1.3 Treatment

Exposed areas of treated wood that are cut or drilled after treatment shall receive a field treatment in accordance with AWPA M4. Items of all-heart material of cedar, cypress, or redwood will not require preservative treatment, except when in direct contact with soil. Except as specified for all-heart material of the previously mentioned species, the following items shall be treated:

a. Wood members in contact with or within 18 inches of soil.

b. Wood members in contact with water.

c. Wood members in contact with roofing or flashing systems.

d. Wood members set into concrete regardless of location, including flush-with-deck wood nailers for roofs.

e. Wood members in contact with concrete or masonry.

f. Wood members in contact with plaster.

2.1.3.1 Lumber

Lumber shall be treated in accordance with AWPA C2 with waterborne preservatives listed in AWPA P5 to a retention level as follows:

a. 0.40 pcf intended for above ground use.

b. 0.60 pcf intended for ground contact and fresh water use.

2.1.3.2 Plywood

Plywood shall be treated in accordance with AWPA C9 with waterborne preservatives listed in AWPA P5 to a retention level as follows:

a. 0.40 pcf intended for above ground use.

b. 0.60 pcf intended for ground contact and fresh water use.

2.1.4 Moisture Content

At the time lumber and other materials are delivered and when installed in the work their moisture content shall be as follows:

a. Treated and Untreated Lumber: 4 inches or less, nominal thickness, 19 percent maximum. 5 inches or more, nominal thickness, 23 percent maximum in a 3 inch perimeter of the timber cross-section.

b. Materials Other Than Lumber: In accordance with standard under which product is produced.

2.1.5 Fire-Retardant Treatment

Fire-retardant treated wood shall be pressure treated in accordance with AWPA C20 for lumber and AWPA C27 for plywood. Material use shall be defined in AWPA C20 and AWPA C27 for Interior Type and Exterior Type. Treatment and performance inspection shall be by an independent and qualified testing agency that establishes performance ratings. Each piece or bundle of treated material shall bear identification of the testing agency to indicate performance in accordance with such rating. Treated materials to be exposed to rain wetting shall be subjected to an accelerated weathering technique in accordance with ASTM D 2898 prior to being tested for compliance with AWPA C20 or AWPA C27.

2.1.6 Sheathing

Sheathing shall be plywood or structural-use panels, or wood for roof

sheathing.

2.1.6.1 Plywood

Plywood shall conform to DOC PS 1, APA PRP-108 or DOC PS 2, Grade C-D with exterior glue. Sheathing for roof without corner bracing of framing shall have a span rating of 16/0 or greater for supports 16 inches on center and a span rating of 24/0 or greater for supports 24 inches on center.

2.1.6.2 Structural-Use Panels

Panels shall meet the qualification requirements of APA PRP-108 or DOC PS 2 for rated sheathing, Exposure 1 or Structural I rated sheathing, Exposure 1. Sheathing for roofs or walls without corner bracing of framing shall have a span rating of 16/0 or greater for supports 16 inches on center and shall have a span rating of 24/0 or greater for supports 24 inches on center.

2.1.7 Miscellaneous Wood Members

2.1.7.1 Nonstress Graded Members

Members shall include bridging, corner bracing, furring, grounds, and nailing strips. Members shall be in accordance with the following table for the species used. Sizes shall be as follows unless otherwise shown:

Member	Size (inch)
Bridging	1 x 3 or 1 x 4 for use between members 2 x 12 and smaller; 2 x 4 for use between members larger than 2 x 12.
Corner bracing	1 x 4.
Furring	1 x 3.
Grounds	Plaster thickness by 1-1/2.
Nailing strips	1 x 3 or 1 x 4 when used as shingle base or interior finish, otherwise 2 inch stock.

2.1.7.2 Blocking

Blocking shall be standard or number 2 grade.

2.1.7.3 Rough Bucks and Frames

Rough bucks and frames shall be straight standard or number 2 grade.

2.2 ACCESSORIES AND NAILS

General: All fasteners used in conjunction with pressure-preservative

treated wood shall be hot-dip galvanized.

Markings shall identify both the strength grade and the manufacturer. Accessories and nails shall conform to the following:

2.2.1 Anchor Bolts

ASTM A 307, size as indicated, complete with nuts and washers.

2.2.2 Bolts: Lag, Toggle, and Miscellaneous Bolts and Screws

Type, size, and finish best suited for intended use. Finish options include zinc compounds, cadmium, and aluminum paint impregnated finishes.

2.2.3 Clip Angles

Steel, 3/16 inch thick, size best suited for intended use; or zinc-coated steel or iron commercial clips designed for connecting wood members.

2.2.4 Expansion Shields

Type and size best suited for intended use.

2.2.5 Nails and Staples

ASTM F 547, size and type best suited for purpose; staples shall be as recommended by the manufacturer of the materials to be joined. For sheathing and subflooring, length of nails shall be sufficient to extend 1 inch into supports. In general, 8-penny or larger nails shall be used for nailing through 1 inch thick lumber and for toe nailing 2 inch thick lumber; 16-penny or larger nails shall be used for nailing through 2 inch thick lumber. Nails used with treated lumber and sheathing shall be galvanized. Nailing shall be in accordance with the recommended nailing schedule contained in AF&PA T11. Where detailed nailing requirements are not specified, nail size and spacing shall be sufficient to develop an adequate strength for the connection. The connection's strength shall be verified against the nail capacity tables in AF&PA T01. Reasonable judgement backed by experience shall ensure that the designed connection will not cause the wood to split. If a load situation exceeds a reasonable limit for nails, a specialized connector shall be used.

PART 3 EXECUTION

3.1 INSTALLATION OF FRAMING

3.1.1 General

General framing shall be in accordance with AF&PA T11.Members shall be closely fitted, accurately set to required lines and levels, and rigidly secured in place. Members shall be framed for passage of ducts. Members shall be cut, notched, or bored in accordance with applicable requirements of AF&PA T01 for the passage of pipes, wires, or conduits. Rafters, purlins, and joists shall be set with crown edge up. Framing shall be kept at least 2 inches away from chimneys and 4 inches away from fireplace

backwalls. When joists, beams, and girders are placed on masonry or concrete, a wood base plate shall be positioned and leveled with grout. The joist, beam, or girder shall then be placed on the plate. When joists, beams, and girders are set into masonry or concrete, a pocket shall be formed into the wall. The joist, beam, or girder shall then be placed into the pocket and leveled with a steel shim.

3.2 INSTALLATION OF SHEATHING

3.2.1 Plywood and Structural-Use Panels

Sheathing shall be applied with edges 1/8 inch apart at side and end joints, and nailed at supported edges at 6 inches on center and at intermediate supports 12 inches on center unless otherwise shown. Nailing of edges shall be 3/8 inchfrom the edges. Wall sheathing shall extend over top and bottom plates, and if applied horizontally the vertical joints shall be made over supports and staggered. Wall sheathing over which wood shingles are to be applied shall be applied horizontally. Roof sheathing shall be applied with long dimension at right angles to supports, end joints made over supports, and end joints staggered.

3.3 INSTALLATION OF MISCELLANEOUS WOOD MEMBERS

3.3.1 Blocking

Blocking shall be provided as indicated on the Drawings.

3.3.2 Nailers and Nailing Strips

Nailers and nailing strips shall be provided as necessary for the attachment of finish materials. Nailers used in conjunction with roof deck installation shall be installed flush with the roof deck system. Stacked nailers shall be assembled with spikes or nails spaced not more than 18 inches on center and staggered. Beginning and ending nails shall not be more than 6 inches for nailer end. Ends of stacked nailers shall be offset approximately 12 inches in long runs and alternated at corners. Anchors shall extend through the entire thickness of the nailer. Strips shall be run in lengths as long as practicable, butt jointed, cut into wood framing members when necessary, and rigidly secured in place. Nailers and nailer installation for Factory Mutual wind uplift rated roof systems specified in other Sections of these specifications shall conform to the recommendations contained in FM LPD 1-49.

3.3.3 Wood Grounds

Wood grounds shall be provided as necessary for attachment of trim, finish, and other work to plaster. Grounds shall be run in lengths as long as practicable, butt jointed, and rigidly secured in place.

3.3.4 Furring Strips

Furring strips shall be provided at the locations shown. Furring strips shall be installed at 16 inches on center unless otherwise shown, run in lengths as long as practicable, butt jointed and rigidly secured in place.

-- End of Section --

SECTION 06200

FINISH CARPENTRY

PART 1 GENERAL

1.1 REFERENCES

The publications listed below form a part of this specification to the extent referenced. The publications are referred to in the text by basic designation only.

AMERICAN SOCIETY FOR TESTING AND MATERIALS (ASTM)

ASTM D 2898	(1994) Accelerated Weathering of Fire-Retardant-Treated Wood for Fire Testing

AMERICAN WOOD-PRESERVERS' ASSOCIATION (AWPA)

AWPA C20	(1993) Structural Lumber Fire-Retardant Pressure Treatment
AWPA C27	(1993) Plywood - Fire-Retardant Pressure Treatmen

1.2 SUBMITTALS

Government approval is required for submittals with a "GA" designation; submittals having an "FIO" designation are for information only. The following shall be submitted in accordance with Section 01330 SUBMITTAL PROCEDURES:

SD-01 Data

Manufacturer's printed data, showing texture, density, catalog cuts, and installation instructions.

Wood Items, and Trim; GA.
Manufacturer's printed data indicating the usage of engineered or recycled wood products, and environmentally safe preservatives.

SD-04 Drawings

Finish Carpentry; GA.

Drawings showing fabricated items and special mill and woodwork items. Drawings shall indicate materials and details of construction, methods of fastening, erection, and installation.

SD-14 Samples

Moldings; GA.

Samples shall be of sufficient size to show patterns, color ranges, and types, as applicable, of the material proposed to be used.

1.3 DELIVERY AND STORAGE

Materials shall be delivered to the site in undamaged condition, stored off ground in fully covered, well-ventilated areas, and protected from extreme changes in temperature and humidity.

PART 2 PRODUCTS

2.1 WOOD ITEMS

The Contractor shall furnish products which optimize design by reducing the amount of wood used (engineered wood), or recycled wood products, and preservatives without arsenic or chromium when the products and methods are competitive in price or directed by the Contracting Officer.

2.1.1 Grading and Marking

Materials shall bear the trademark, stamp or other identifying marks indicating grades of material and rules or standards under which produced. Such identifying marks on a material shall be in accordance with the rule or standard under which the material is produced, including requirements for qualifications and authority of the inspection organization, usage of authorized identification, and information included in the identification. The inspection agency for lumber shall be certified by the Board of Review, American Lumber Standards Committee, to grade the species used. Except for plywood, structural-use panels, and lumber, bundle marking will be permitted in lieu of marking each individual piece. Surfaces that are to be architecturally exposed to view shall not bear grademarks, stamps, or other types of identifying marks.

2.1.2 Sizes and Patterns

Lumber sizes and patterns shall conform to rules or standards under which produced. Unless otherwise specified, lumber shall be surfaced on four sides. Sizes and patterns for materials other than lumber shall conform to requirements of the rules or standards under which produced. Size references, unless otherwise specified, are nominal sizes, and actual sizes shall be within manufacturing tolerances allowed by the standard under which the product is produced.

2.1.3 Moisture Content

The maximum moisture content of untreated trim and wood siding shall be 15 percent at the time of delivery to the jobsite and when installed. Moisture content of all other material shall be in accordance with the standard under which the product is produced.

2.1.4 Fire-Retardant Treatment

Fire-retardant treated lumber shall be pressure treated in accordance with AWPA C20. Fire-retardant treated plywood shall be pressure treated in accordance with AWPA C27. Material use shall be defined in AWPA C20 and AWPA C27 for Interior Type A. Treatment and performance inspection shall be by a qualified independent testing agency that establishes performance ratings. Each piece or bundle of treated material shall bear identification of the testing agency to indicate performance with such rating. Treated materials to be exposed to rain wetting shall be subjected to an accelerated weathering technique in accordance with ASTM D 2898, Method A, prior to being tested for compliance with AWPA C20 or AWPA C27. Items to be treated include: Items as indicated on Drawings..

2.1.5 Woodwork Items

2.1.5.1 Wood Benches

Quality Standard: Provide AWI Premium Grade materials and workmanship.

Wood Species and Cuts: Provide as follows:

1. Transparent Finished Work: Quarter Sawn/Sliced Maple.

Shop Assembly: Shop assemble benches using butcher-block type construction with accurately mitered joints, and pressure glued with continuous splines.

2.1.5.2 Wood Handrails

Quality Standard: Provide AWI Premium Grade materials and workmanship.

Wood Species and Cuts: Provide as follows:

1. Transparent Finished Work: Plain Sawn/Sliced Grade II Select White Maple.

PART 3 EXECUTION

3.1 WORKMANSHIP AND INSTALLATION REQUIREMENTS

Dressed and sand finish carpentry work free from machine and tool marks, abrasions, raised grain, or other defects on surfaces exposed to view.

Provide tight joints formed to conceal shrinkage. Fit butt joints with concealed spline. Glue and dowel shop miters which are four inches or greater. Glue and spline miters less than 4 in., with spline concealed.

Blind nail finish work to the greatest extent possible. Where surface nailing is used, set and fill nails to match adjacent wood.

Wherever nailing into concrete is done, care shall be taken to protect pipes or conduits embedded in the slab. No puncturing of pipes or conduits will be allowed. Damage to embedded work shall be corrected without further cost to Government. Inserts and anchor bolts shall be placed

before the pouring of concrete.

Secure work to prevent checks or warps. Finish carpentry work shall be properly framed, closely fitted, and accurately set to the required lines and levels and shall be rigidly secured in place.

3.2 PAINTING AND FINISHING

Field painting and finishing is specified under Section 09900, PAINTING, GENERAL. All finish carpentry items shall be primed or sealed, as work of this section, before installation. Paint or seal coats must be dry before items are installed.

Sand all finish work at field joints and where required by installation. Leave work in perfect condition for finishing under Section 09900, PAINTING, GENERAL.

3.3 SPECIFIC INSTRUCTIONS

Important Note: No attempt is made in the following specific instructions to list all elements of finish carpentry and architectural woodwork required on this project. It is the responsibility of the Contractor to determine for himself from the Drawings the scope and nature of the work required. These specific instructions are intended only to provide additional instructions regarding those portions of the finished carpentry and architectural woodwork for which information beyond that given on the Drawings or covered in the AWI Quality Standards seems needed to properly describe the work. Where the scope of a category is listed it is done in a general manner to assist the Contractor in determining the general nature of work he shall look for as being required in said category, and not to limit the work.

3.4 FINISH CARPENTRY WORK

Fabricate and install finish carpentry work in accordance with the Drawings, the specifications, and AWI Quality Standards applicable or referenced to this work.

Miscellaneous Items: Install all required standing and running trim and other miscellaneous items throughout, as indicated on the Drawings and as required to satisfactorily complete the entire work, whether or not each and every required piece is specifically indicated on the Drawings. Trim shall be of same material and finish as the larger member to which applied.

3.5 WOODWORK ITEMS

3.5.1 Wood Benches

Wood benches shall be fabricated in longest practical lengths. Fasten benches to metal brackets from below using wood screws or lag bolts in pre-drilled holes. Metal brackets are provide under Section 05500 MISCELLANEOUS METALS.

3.5.2 Handrails and Guardrails

Wood handrails shall be provided as indicated. Provide concealed fasteners in the finished work. Where wood is to be connected to metal support members, provide countersunk screws tapped into metal support members concealed by grain matched flush plugs. Provide simple and compound radius sections for transitions in direction of handrails. Reinforce butt joints with laminated splines concealed in the finish work. Return handrails to within 1/8 inch of wall face at ends. Where handrails can not be returned to wall, terminate handrails with hemisphere formed as part of end section unless specifically indicated otherwise.

3.6 COMPLETION

Just prior to completion of work of this Section, inspect work in the company of Contracting Officer and make adjustments and corrections to work leaving operating parts in perfect operating condition, all jointing to adjacent material tight, all surfaces without blemishes or stains, all work properly executed and complete, and all defects and damaged work replaced or corrected.

-- End of Section --

SECTION 06400

ARCHITECTURAL WOODWORK

PART 1 GENERAL

1.1 REFERENCES

The publications listed below form a part of this specification to the extent referenced. The publications are referred to in the text by basic designation only.

American Society for Testing and Materials (ASTM)

ASTM A 276	(1996) Specification for Stainless Steel Bars and Shapes
ASTM A 666	(1996) Specification for Austenitic Stainless Steel Sheet, Strip, Plate, and Flat Bar
ASTM E 84	Surface Burning Characteristics of Building Materials

The Architectural Woodwork Institute (AWI)

AWI Quality Standards	Architectural Woodwork Quality Standards, Guide Specifications and Quality Certification Progra

1.2 SUBMITTALS

Government approval is required for submittals with a "GA" designation; submittals having an "FIO" designation are for information only. The following shall be submitted in accordance with Section 01330 SUBMITTAL PROCEDURES:

SD-01 Data

Plywood; GA; High-Pressure Decorative Laminate; GA; Adhesive for Bonding Plastic Laminate; GA; Solid-Surfacing Material; GA; Fire-Retardant-Treated Materials; GA; Cabinet Hardware and Accessories; GA; Finishing Materials and Processes.

Submit manufacturer's printed product data, specifications, standard details, installation instructions, use limitations and recommendations for each material used. Provide certifications that materials and systems comply with specified requirements.

Qualification Data; FI

For firms and persons specified in "Quality Assurance" Article to demonstrate their capabilities and experience. Include lists of completed projects with project names and addresses, names and addresses of architects and owners, and other information specified.

SD-04 Drawings

Casework Shop Drawings; GA.

Provide large scale shop Drawings for fabrication, installation and erection of parts of work. Provide plans, elevations, and details of anchorages, connections and accessory items. Provide installation templates for work installed by others. Show interfaces and relationships to work of other trades.

1. Show locations and sizes of furring, blocking, and hanging strips, including concealed blocking and reinforcement specified in other Sections.

2. Show locations and sizes of cutouts and holes for plumbing fixtures, [faucets, soap dispensers, and other items installed in architectural woodwork.

3. Show veneer leaves with dimensions, grain direction, exposed face, and identification numbers indicating the flitch and sequence within the flitch for each leaf.

4. Apply WIC-certified compliance label to first page of Shop Drawings.

SD-13 Certificates

Product Certificates; FIO.

Signed by manufacturers of woodwork certifying that products furnished comply with requirements.

SD-14 Samples

Plywood; GA; High-Pressure Decorative Laminate; GA; Solid-Surfacing Material ; GA; Cabinet Hardware and Accessories; GA; Finishing Materials; GA.

Submit samples showing complete range of colors, textures, and finishes available for each material used.

1. Lumber with or for transparent finish, 5 inches wide by 24 inches long, for each species and cut, finished on 1 side and 1 edge.

2. Veneer leaves representative of and selected from flitches to be used for transparent-finished woodwork.

3. Wood-veneer-faced panel products with or for transparent finish, 12 by 24 inches, for each species and cut. Include at least one face-veneer seam and finish as specified.

4. Lumber and panel products with shop-applied opaque finish, 50 sq. in. for lumber and 8 by 10 inches for panels, for each finish system and color, with 1/2 of exposed surface finished.

5. Plastic-laminate-clad panel products, 8 by 10 inches, for each type, color, pattern, and surface finish, with separate samples of unfaced panel product used for core.

6. Thermoset decorative-overlay surfaced panel products, 8 by 10 inches, for each type, color, pattern, and surface finish.

7. Solid-surfacing materials, 6 inches square.

8. Corner pieces as follows:

   a. Cabinet front frame joints between stiles and rail, as well as exposed end pieces, 18 inches high by 18 inches wide by 6 inches deep.
   b. Miter joints for standing trim.

9. Exposed cabinet hardware and accessories, one unit for each type and finish.

1.3 QUALITY ASSURANCE

1.3.1 Installer Qualifications:

An experienced installer who has completed architectural woodwork similar in material, design, and extent to that indicated for this Project and whose work has resulted in construction with a record of successful in-service performance.

1.3.2 Fabricator Qualifications:

A firm experienced in producing architectural woodwork similar to that indicated for this Project and with a record of successful in-service performance, as well as sufficient production capacity to produce required units.

1.3.3 Quality Standard:

Unless otherwise indicated, comply with AWI Quality Standards for grades of interior architectural woodwork, construction, finishes, and other requirements.

1. Provide AWI Quality Certification Program labels or certificates indicating that woodwork complies with requirements of grades specified.

1.3.4 Panel Products

Where particle board is used, provide product that is minimum 45 lbs. per cubic foot density. Do not use hardboard

All cores used for veneer products shall be shall be UL labeled fire-retardant treated. Exposed woodwork shall have a flame spread of less than 200 when tested in compliance with ASTM E 84.

1.3.5 Fire-Test-Response Characteristics:

Where fire-retardant materials or products are indicated, provide materials and products with specified fire-test-response characteristics as determined by testing identical products per test method indicated by UL, ITS, or another testing and inspecting agency acceptable to authorities having jurisdiction. Identify with appropriate markings of applicable testing and inspecting agency in the form of separable paper label or, where required by authorities having jurisdiction, imprint on surfaces of materials that will be concealed from view after installation.

1.3.6 Mockups:

Before fabricating and installing interior architectural woodwork, build mockups for each form of construction and finish required to verify selections made under sample Submittals and to demonstrate aesthetic effects and qualities of materials and execution. Build mockups to comply with the following requirements, using materials indicated for the completed Work:

1. Build mockups in the location and of the size indicated or, if not indicated, as directed by Contracting Officer.

2. Notify Contracting Officer seven days in advance of dates and times when mockups will be fabricated and installed.

3. Demonstrate the proposed range of aesthetic effects and workmanship.

4. Obtain Contracting Officer's approval of mockups before starting interior architectural woodwork fabrication.

5. Maintain mockups during construction in an undisturbed condition as a standard for judging the completed Work.

6. Demolish and remove mockups when directed.

7. Approved mockups may become part of the completed Work if undisturbed at time of Substantial Completion.

1.3.7 Preinstallation Conference:

Conduct conference at Project site prior to installation of architectural woodwork. Discuss indoor temperature and relative humidity required prior to, during, and after the installation.

1.4 PROJECT CONDITIONS

1.4.1 Substrates:

Proceed with work only when substrate construction and penetration work is complete.

1.4.2 Wet Work:

Proceed with work of this Section after wet work has been complete and fully dry or cured. Wet work is defined as plaster, gypsum drywall, paint, concrete, etc.

1.4.3 Conditioning:

Advise Contractor of temperature and humidity requirements for woodwork installation. Do not install work of this Section until required temperature and relative humidity in areas of installation has been stabilized and will be maintained.

1.4.3.1 Environmental Limitations:

Do not deliver or install woodwork until building is enclosed, wet work is complete, and HVAC system is operating and maintaining temperature and relative humidity at occupancy levels during the remainder of the construction period.

1.4.4 Field Measurements:

Where woodwork is indicated to fit to other construction, verify dimensions of other construction by field measurements before fabrication and indicate measurements on Shop Drawings. Coordinate fabrication schedule with construction progress to avoid delaying the Work.

1. Locate concealed framing, blocking, and reinforcements that support woodwork by field measurements before being enclosed and indicate measurements on Shop Drawings.

2. Established Dimensions: Where field measurements cannot be made without delaying the Work, establish dimensions and proceed with fabricating woodwork without field measurements. Provide allowance for trimming at site, and coordinate construction to ensure that actual dimensions correspond to established dimensions.

1.5 COORDINATION

Coordinate sizes and locations of framing, blocking, furring, reinforcements, and other related units of Work specified in other Sections to ensure that interior architectural woodwork can be supported and installed as indicated.

1.6 SCOPE OF WORK

Generally, without limitation, the work of this Section includes the following:

1. Custom plastic laminate casework.

2. Custom hardwood casework.
3. Plastic laminate counters and tops.
4. Solid surfacing work.
5. Glass fronted casework, including Stereo Niche.
6. Miscellaneous casework, including Mail Boxes; Cubbies; and Display Cabinets.
6. Stainless Steel Countertops at Pass-Thru.

PART 2 PRODUCTS

2.1 MATERIALS

2.1.1 General:

Provide materials that comply with requirements of the AWI quality standard for each type of woodwork and quality grade specified, unless otherwise indicated or specified.

2.1.2 Wood Species and Cut for Transparent Finish:

Solid Wood: Select White Maple, quarter sawn or cut; and Select White Oak where indicated at Control Desk, Rift Sawn.

Veneered Products: Select White Maple, quarter sawn, book matched, unless noted otherwise; except provide White Oak at Control Desk.

2.1.3 Wood Species for Opaque Finish:

Any closed-grain hardwood.

2.1.4 Wood Products: Comply with the following:

1. Hardboard: AHA A135.4.
2. Medium-Density Fiberboard: ANSI A208.2, Grade MD-Exterior Glue.
3. Softwood Plywood: DOC PS 1, Medium Density Overlay.
4. Hardwood Plywood and Face Veneers: HPVA HP-1.

2.1.5 Thermoset Decorative Overlay:

Medium-density fiberboard complying with ANSI A208.2, Grade MD, with surface of thermally fused, melamine-impregnated decorative paper complying with LMA SAT-1.

2.1.6 High-Pressure Decorative Laminate:

NEMA LD 3, grades as indicated, or if not indicated, as required by woodwork quality standard.

1. Manufacturer: Subject to compliance with requirements, provide high-pressure decorative laminates by one of the following:

    a. Formica Corporation.
    b. International Paper; Decorative Products Div.
    c. Laminart.

d. Pioneer Plastics Corp.
e. Westinghouse Electric Corp.; Specialty Products Div.
f. Wilsonart International; Div. of Premark International, Inc.

2.1.7 Chemical-Resistant, High-Pressure Decorative Laminate:

1. NEMA LD 3, Grade HGP, and, laminate has the following ratings when tested with indicated reagents according to NEMA LD 3, Test Procedure 3.9.5:

a. Nitric Acid (30 Percent): Moderate effect.
b. Sulfuric Acid (77 Percent): Moderate effect.
c. Hydrochloric Acid (37 Percent): Moderate effect.
d. Phosphoric Acid (75 Percent): No effect.
e. Acetic Acid (98 Percent): No effect.
f. Carbon Tetrachloride: No effect.
g. Formaldehyde: No effect.
h. Ethyl Acetate: No effect.
i. Ethyl Ether: No effect.
j. Phenol (85 Percent): Moderate effect.
k. Benzene: No effect.
l. Xylene: No effect.
m. Butyl Alcohol: No effect.
n. Furfural: No effect.
o. Methyl Ethyl Ketone: No effect.
p. Sodium Hydroxide (25 Percent): No effect.
q. Sodium Sulfide (15 Percent): No effect.
r. Ammonium Hydroxide (28 Percent): No effect.
s. Zinc Chloride: No effect.
t. Gentian Violet: No effect.
u. Methyl Red: No effect.

2. Products: Subject to compliance with requirements, provide one of the following:

a. Lab Grade 840 Black; Formica Corporation.
b. Pionite Chemguard; Pioneer Plastics Corp.
c. Chemsurf; Wilsonart International, Div. of Premark International, Inc.

2.1.8 Adhesive for Bonding Plastic Laminate:

Provide adhesive as recommended by laminate manufacturer.

2.1.9 Solid-Surfacing Material:

Homogeneous solid sheets of filled plastic resin complying with material and performance requirements in ANSI Z124.3, for Type 5 or Type 6, without a precoated finish.

1. Products: Subject to compliance with requirements, provide one of the following:

a. Avonite; Avonite, Inc.

b. Corian; DuPont Polymers.
c. Surell; Formica Corporation.
d. Fountainhead; International Paper, Decorative Products Div.
e. Swanstone; Swan Corporation (The).
f. Gibraltar; Wilsonart International, Div. of Premark International, Inc.

2.1.10 Stainless Steel Items:

General: Provide all miscellaneous stainless steel items as indicated, including stainless steel counter tops and stainless steel trim at display cases. Comply with requirements specified under Section 05500, MISCELLANEOUS METAL for fabrication requirements.

1. Stainless Steel Shapes: ASTM A 276, Type 316.
2. Stainless Steel Counter Tops: 20 gauge stainless steel sheet, conforming to ASTM A 666, Type 316.

Stainless Steel Finish: Bright, Directional Polish: AISI No. 4 Finish.

2.2 FIRE-RETARDANT-TREATED MATERIALS

2.2.1 General:

At all interior Architectural Woodwork, use materials impregnated with fire-retardant chemical formulations indicated by a pressure process or other means acceptable to authorities having jurisdiction to produce products with fire-test-response characteristics specified.

1. Do not use treated material that does not comply with requirements of referenced woodworking standard or that is warped, discolored, or otherwise defective.

2. Use fire-retardant-treatment formulations that do not bleed through or otherwise adversely affect finishes. Do not use colorants in solution to distinguish treated material from untreated material.

2.2.2 Fire-Retardant-Treated Lumber and Plywood by Pressure Process:

Comply with AWPA C20 (lumber) and AWPA C27 (plywood), for woodwork items. Use the following treatment type:

1. Exterior Type: Organic-resin-based formulation thermally set in wood by kiln-drying.

2. Interior Type A: Low-hygroscopic formulation.

3. Mill lumber after treatment, within limits set for wood removal that does not affect listed fire-test-response characteristics, using a woodworking plant certified by testing and inspecting agency.

4. Kiln-dry material before and after treatment to levels required

for untreated material.

2.2.3 Fire-Retardant-Treated Lumber and Plywood by Nonpressure Process:

Apply nontoxic, water-soluble, fire-retardant treatment by dip, spray, roller, curtain coating, vacuum chamber, or soaking to achieve flame-spread rating of 25 or less and smoke-developed rating of 450 or less per ASTM E 84.

2.2.4 Fire-Retardant Fiberboard:

Medium-density fiberboard panels complying with ANSI A208.2, made from softwood fibers, synthetic resins, and fire-retardant chemicals mixed together at time of panel manufacture to achieve flame-spread rating of 25 or less and smoke-developed rating of 200 or less per ASTM E 84.

1. Product: Subject to compliance with requirements, provide "Medite FR" by SierraPine Ltd; Medite Div.; or approved equal.

2.3 CABINET HARDWARE AND ACCESSORIES

2.3.1 General:

Provide cabinet hardware and accessory materials associated with architectural cabinets and casework.

2.3.2 Hardware Standard:

Comply with BHMA A156.9 for items indicated by referencing BHMA numbers or items referenced to this standard.

2.3.3 Butt Hinges:

2-3/4-inch, 5-knuckle steel hinges made from 0.095-inch-thick metal, and as follows:

1. Semi-concealed Hinges for Flush Doors: BHMA A156.9, B01361.
2. Semi-concealed Hinges for Overlay Doors: BHMA A156.9, B01521.

2.3.4 Frameless Concealed Hinges (European Type):

BHMA A156.9, B01602, 135 degrees of opening unless otherwise indicated on Drawings, self-closing.

2.3.5 Back-Mounted Pulls:

BHMA A156.9, B02011.

2.3.6 Wire Pulls:

Back mounted, 4 inches long, 2-1/2 inches deep, and 5/16 inches in diameter.

2.3.7 Catches:

Magnetic catches, BHMA A156.9, B03141.

2.3.8 Adjustable Shelf Standards and Supports:

BHMA A156.9, B04071; with shelf rests, B04081, and BHMA A156.9, B04102; with shelf brackets, B04112.

2.3.9 Drawer Slides:

Side-mounted, full-extension, zinc-plated steel drawer slides with steel ball bearings, BHMA A156.9, B05091, and rated for the following loads:

1. Box Drawer Slides: 100 lbf.
2. File Drawer Slides: 200 lbf.
3. Pencil Drawer Slides: 45 lbf.
4. Keyboard Slide: 75 lbf.

2.3.10 Aluminum Slides for Sliding Glass Doors:

BHMA A156.9, B07063.

2.3.11 Door Locks:

BHMA A156.11, E07121.

2.3.12 Drawer Locks:

BHMA A156.11, E07041.

2.3.13 Grommets for Cable Passage through Countertops:

1-1/4-inch and 2-inch as indicated, in color selected, molded-plastic grommets and matching plastic caps with slot for wire passage.

1. Product: Subject to compliance with requirements, provide "OG series" by Doug Mockett and Co., Inc., or approved equal.

2.3.14 Exposed Hardware Finishes:

For exposed hardware, provide finish that complies with BHMA A156.18 for BHMA finish number indicated.

1. Satin Chromium Plated: BHMA 626 for brass or bronze base; BHMA 652 for steel base.

2. Satin Stainless Steel: BHMA 630.

2.3.15 Concealed Hardware Finish:

For concealed hardware, provide manufacturer's standard finish that complies with product class requirements in BHMA A156.9.

2.4 INSTALLATION MATERIALS

2.4.1 Furring, Blocking, Shims, and Hanging Strips:

Fire-retardant-treated softwood lumber, kiln-dried to less than 15 percent moisture content.

2.4.2 Anchors:

Select material, type, size, and finish required for each substrate for secure anchorage. Provide nonferrous-metal or hot-dip galvanized anchors and inserts on inside face of exterior walls and elsewhere as required for corrosion resistance. Provide toothed-steel or lead expansion sleeves for drilled-in-place anchors.

2.5 FABRICATION, GENERAL

2.5.1 Interior Woodwork Grade:

Provide Premium grade interior woodwork complying with the referenced quality standard, except where more restrictive requirements are indicated or specified by the Documents.

2.5.2 Wood Moisture Content:

Comply with requirements of referenced quality standard for wood moisture content in relation to ambient relative humidity during fabrication and in installation areas.

2.5.2 General:

Sand fire-retardant-treated wood lightly to remove raised grain on exposed surfaces before fabrication.

Fabricate woodwork to dimensions, profiles, and details indicated. Ease edges to radius indicated for the following:

1. Corners of Cabinets and Edges of Solid-Wood (Lumber) Members 3/4 Inch Thick or Less: 1/16 inch.

2. Edges of Rails and Similar Members More Than 3/4 Inch Thick: 1/8 inch.

3. Corners of Cabinets and Edges of Solid-Wood (Lumber) Members and Rails: 1/16 inch.

Complete fabrication, including assembly, finishing, and hardware application, to maximum extent possible, before shipment to Project site. Disassemble components only as necessary for shipment and installation. Where necessary for fitting at site, provide ample allowance for scribing, trimming, and fitting.

1. Notify Contracting Officer seven days in advance of the dates and times woodwork fabrication will be complete.

2. Trial fit assemblies at fabrication shop that cannot be shipped completely assembled. Install dowels, screws, bolted connectors,

and other fastening devices that can be removed after trial fitting. Verify that various parts fit as intended and check measurements of assemblies against field measurements indicated on Shop Drawings before disassembling for shipment.

Shop cut openings, to maximum extent possible, to receive hardware, appliances, plumbing fixtures, electrical work, and similar items. Locate openings accurately and use templates or roughing-in diagrams to produce accurately sized and shaped openings. Sand edges of cutouts to remove splinters and burrs.

1. Seal edges of openings in veneered countertops with a coat of varnish.

Install glass to comply with applicable requirements in Division 8 Section "Glazing" and in GANA's "Glazing Manual." For glass in wood frames, secure glass with removable stops.

2.6 WOOD CABINETS FOR TRANSPARENT FINISH

2.6.1 Quality Standard:

Comply with AWI Section 400 requirements for wood cabinets, except where more restrictive requirements are indicated or specified by the Documents.

2.6.2 AWI Grade:

Premium, except where more restrictive requirements are indicated or specified by the Documents. Shelves shall be 3/4 in. veneer core hardwood plywood for spans up to 36 in.; and 3/4 in. veneer core plywood with nominal 1 x 2 solid hardwood front and back edging for spans greater than 36 in. Wall cabinet bottoms shall be 3/4 in. veneer core plywood where no apron is indicated. At concealed surfaces of panel products, provide balancing sheet of material to match semi-exposed parts.

2.6.3 AWI Type of Cabinet Construction:

Conform to requirements for Flush Overlay construction, except where more restrictive requirements are indicated or specified by the Documents.

2.6.4 Reveal Dimension:

Provide 1/8 in. reveal unless required otherwise by the Documents.

2.6.5 Wood Species and Cut for Exposed Surfaces:

White oak, rift sawn or cut.

1. Grain Matching: Run and match grain vertically for drawer fronts, doors, and fixed panels.
2. Matching of Veneer Leaves: Book match.
3. Veneer Matching within Panel Face: Balance match.

2.6.6 Semi-exposed Surfaces:

Provide surface materials indicated below:

1. Surfaces Other Than Drawer Bodies: Match species and cut indicated for exposed surfaces.
2. Drawer Sides and Backs: Solid-hardwood lumber, stained to match species indicated for exposed surfaces.
3. Drawer Bottoms: Hardwood plywood.

2.6.7 Dust Panels:

Provide dust panels of 1/4-inch plywood or tempered hardboard above compartments and drawers, unless located directly under tops.

2.7 PLASTIC-LAMINATE CABINETS

2.7.1 Quality Standard:

Comply with AWI Section 400 requirements for laminate cabinets, except where more restrictive requirements are indicated or specified by the Documents.

2.7.2 AWI Grade:

Premium, except where more restrictive requirements are indicated or specified by the Documents. Shelves shall be 3/4 in. veneer core hardwood plywood for spans up to 36 in.; and 3/4 in. veneer core plywood with nominal 1 x 2 solid hardwood front and back edging for spans greater than 36 in. Wall cabinet bottoms shall be 3/4 in. veneer core plywood where no apron is indicated. At concealed surfaces of panel products, provide balancing sheet of material to match semi-exposed parts.

2.7.3 AWI Type of Cabinet Construction:

Conform to requirements for Flush Overlay construction, except where more restrictive requirements are indicated or specified by the Documents.

2.7.4 Reveal Dimension:

Provide 1/8 in. reveal unless required otherwise by the Documents.

2.7.5 Laminate Cladding for Exposed Surfaces:

High-pressure decorative laminate complying with the following requirements:

1. Horizontal Surfaces Other Than Tops: HGS.
2. Postformed Surfaces: HGP.
3. Vertical Surfaces: HGS.
4. Edges: VGS.

2.7.6 Materials for Semi-exposed Surfaces:

Provide surface materials indicated below:

1. Surfaces Other Than Drawer Bodies: High-pressure decorative laminate, Grade VGS.
2. Drawer Sides and Backs: Solid-hardwood lumber.
3. Drawer Bottoms: Hardwood plywood.

2.7.7 Colors, Patterns, and Finishes:

Provide materials and products that result in colors and textures of exposed laminate surfaces that match those indicated in Section 09915, COLOR SCHEDULE.

2.7.8 Dust Panels:

Provide dust panels of 1/4-inch plywood or tempered hardboard above compartments and drawers, unless located directly under tops.

2.8 PLASTIC-LAMINATE COUNTERTOPS

2.8.1 Quality Standard:

Comply with AWI Section 400 requirements for high-pressure decorative laminate countertops.

2.8.2 AWI Grade:

Premium, except where more restrictive requirements are indicated or specified by the Documents.

2.8.3 High-Pressure Decorative Laminate Grade:

HGS.

2.8.4 Colors, Patterns, and Finishes:

Provide materials and products that result in colors and textures of exposed laminate surfaces that match those specified in Section 09915, COLOR SCHEDULE.

2.8.5 Edge Treatment:

As indicated.

2.8.6 Core Material:

Exterior-grade plywood.

2.9 SOLID-SURFACING-MATERIAL COUNTERTOPS

2.9.1 Quality Standard:

Comply with AWI Section 400 requirements for countertops

2.9.2 AWI Grade:

Premium.

2.9.3 Solid-Surfacing-Material Thickness:

3/4 inch unless otherwise indicated on Drawings.

2.9.4 Colors, Patterns, and Finishes:

Provide materials and products that result in colors of solid-surfacing material matching colors as specified under Section 09915, COLOR SCHEDULE.

2.9.5 Fabrication of Solid Surfacing Work:

Fabricate tops in one piece with shop-applied backsplashes and edges, unless otherwise indicated. Comply with solid-surfacing-material manufacturer's written recommendations for adhesives, sealers, fabrication, and finishing.

Drill holes in countertops for plumbing fittings and soap dispensers in shop.

2.10 SHOP FINISHING

2.10.1 Quality Standard:

Comply with AWI Section 1500, unless otherwise indicated.

2.10.2 AWI Grade:

Provide finishes of same grades as items to be finished.

2.10.3 General:

The entire finish of interior architectural woodwork is specified in this Section, regardless of whether shop applied or applied after installation. The extent to which the final finish is applied at fabrication shop is Contractor's option, except shop apply at least the prime coat before delivery.

2.10.4 Preparations for Finishing:

Comply with referenced quality standard for sanding, filling countersunk fasteners, sealing concealed surfaces, and similar preparations for finishing architectural woodwork, as applicable to each unit of work.

1. Backpriming: Apply one coat of sealer or primer, compatible with finish coats, to concealed surfaces of woodwork. Concealed surfaces of plastic-laminate-clad woodwork do not require backpriming when surfaced with plastic laminate, backing paper, or thermoset decorative overlay.

2.10.5 Transparent Finish:

Comply with requirements indicated below for grade, finish system,

staining, and sheen, with sheen measured on 60-degree gloss meter per ASTM D 523:

1. Grade: Premium.
2. AWI Finish System TR-2: Catalyzed lacquer.
3. Staining: Match approved sample for color.
4. Wash Coat for Stained Finish: Apply a vinyl wash coat to woodwork made from closed-grain wood before staining and finishing.
5. Sheen: Satin, 30-50.

PART 3 EXECUTION

3.1 PREPARATION

Condition woodwork to average prevailing humidity conditions in installation areas before installation.

Before installing architectural woodwork, examine shop-fabricated work for completion and complete work as required, including removal of packing and backpriming.

3.2 INSTALLATION

3.2.1 Quality Standard:

Install woodwork to comply with AWI Section 1700 for the same grade specified in Part 2 of this Section for type of woodwork involved.

3.2.2 General:

Install woodwork level, plumb, true, and straight. Shim as required with concealed shims. Install level and plumb (including tops) to a tolerance of 1/8 inch in 96 inches.

Scribe and cut woodwork to fit adjoining work, and refinish cut surfaces and repair damaged finish at cuts.

3.2.3 Fire-Retardant-Treated Wood:

Handle, store, and install fire-retardant-treated wood to comply with recommendations of chemical treatment manufacturer, including those for adhesives used to install woodwork.

3.2.4 Anchoring Work:

Anchor woodwork to anchors or blocking built in or directly attached to substrates. Secure with countersunk, concealed fasteners and blind nailing as required for complete installation. Use fine finishing nails [or finishing screws] for exposed fastening, countersunk and filled flush with woodwork and matching final finish if transparent finish is indicated.

3.2.5 Cabinets and Casework:

Install without distortion so doors and drawers fit openings properly and

are accurately aligned. Adjust hardware to center doors and drawers in openings and to provide unencumbered operation. Complete installation of hardware and accessory items as indicated.

1. Install cabinets and casework items with no more than 1/8 inch in 96-inch sag, bow, or other variation from a straight line.

2. Maintain veneer sequence matching of cabinets and casework with transparent finish.

3. Fasten wall cabinets and casework through back, near top and bottom, at ends and not more than 16 inches o.c. with No. 10 wafer-head sheet metal screws through metal backing or metal framing behind wall finish.

3.2.6 Countertops:

Anchor securely by screwing through corner blocks of base cabinets or other supports into underside of countertop.

1. Align adjacent solid-surfacing-material countertops and form seams to comply with manufacturer's written recommendations using adhesive in color to match countertop. Carefully dress joints smooth, remove surface scratches, and clean entire surface.

2. Install countertops with no more than 1/8 inch in 96-inch sag, bow, or other variation from a straight line.

3. Secure backsplashes to tops with concealed metal brackets at 16 inches o.c.

4. Calk space between backsplash and wall with sealant specified in Division 7 Section "Joint Sealants."

3.2.7 Finishing:

Complete the finishing work specified in this Section to extent not completed at shop or before installation of woodwork. Fill nail holes with matching filler where exposed. Apply specified finish coats, including stains and paste fillers if any, to exposed surfaces where only sealer/prime coats were applied in shop.

3.3 ADJUSTING AND CLEANING

Repair damaged and defective woodwork, where possible, to eliminate functional and visual defects; where not possible to repair, replace woodwork. Adjust joinery for uniform appearance.

Clean, lubricate, and adjust hardware.

Clean woodwork on exposed and semi-exposed surfaces. Touch up shop-applied finishes to restore damaged or soiled areas.

-- End of Section --

SECTION 07110

BITUMINOUS DAMPPROOFING

PART 1 GENERAL

1.1 REFERENCES

The publications listed below form a part of this specification to the extent referenced. The publications are referred to in the text by basic designation only.

AMERICAN SOCIETY FOR TESTING AND MATERIALS (ASTM)

ASTM D 1187	(1997) Asphalt-Base Emulsions for Use as Protective Coatings for Metal
ASTM D 1227	(1995) Emulsified Asphalt Used as a Protective Coating for Roofin

1.2 SUBMITTALS

Government approval is required for submittals with a "GA" designation; submittals having an "FIO" designation are for information only. The following shall be submitted in accordance with Section 01330 SUBMITTAL PROCEDURES:

SD-13 Certificates

Materials; GA.

Certificates attesting that the materials meet the requirements specified.

1.3 QUALIFICATIONS

Work shall be performed by skilled laborers thoroughly experienced in the type of bituminous dampproofing work specified to meet the requirements of the contract.

1.4 DELIVERY, STORAGE AND HANDLING

Dampproofing materials shall be delivered to the project site in the original sealed containers bearing the name of manufacturer, contents and brand name, and stored in a weathertight enclosure to prevent moisture damage and absorption. Dampproofing materials shall be protected from freezing. Asphalt shall be stored off the ground on pallets, and covered on top and all sides with breathable-type canvas tarpaulins. Plastic sheets cause condensation buildup; and therefore, shall not be used to cover dampproofing materials. Care shall be taken during storage to avoid separation or settlement of the emulsion components. Damaged or

deteriorated materials shall be removed from the project site.

1.5 SCOPE

Work of this Section includes providing the following:

1. Bituminous dampproofing at all masonry cavity back-up walls.
2. Bituminous dampproofing on all exposed structural steel surfaces within cavities of exterior masonry walls.

PART 2 PRODUCTS

2.1 BITUMINOUS DAMPPROOFING

Provide products recommended by manufacturer for designated application.

Odor Elimination: Provide type of bituminous dampproofing material warranted by manufacturer to be substantially odor free after drying for 24 hours under normal conditions.

Compatibility: Provide bituminous dampproofing products that are compatible with extruded polystyrene insulation applied in masonry cavities; and with structural steel primers on structural steel within cavities to receive bituminous dampproofing.

Cold-Applied, Asphalt Emulsion Dampproofing: Asphalt-based emulsions recommended by the manufacturer for dampproofing use when applied according to the manufacturer's instructions. Provide one of the following:

1. Trowel Grade: Emulsified asphalt mastic, prepared with mineral-colloid emulsifying agents suitable for application in a relatively thick film, complying with ASTM D 1187, Type I.

2. Trowel Grade: Emulsified asphalt mastic, prepared with mineral-colloid emulsifying agents and containing fibers other than asbestos, complying with ASTM D 1227, Type III or IV.

PART 3 EXECUTION

3.1 PREPARATION

Clean substrate of projections and substances detrimental to work; comply with recommendations of prime materials manufacturer.

Install cant strips and similar accessories as recommended by prime materials manufacturer even though not shown.

Fill voids, seal joints, and apply bond breakers, if any, as recommended by prime materials manufacturer, with particular attention at construction joints.

Install separate flashings and corner protection stripping, as recommended by prime materials manufacturer, to precede application of dampproofing. Comply with manufacturer's recommendations. Pay particular attention to

requirements at building expansion joints.

Prime substrate as recommended by prime materials manufacturer.

Protection of Other Work: Do not allow liquid and mastic compounds to enter and clog drains and conductors. Prevent spillage and migration onto other surfaces of work by masking or otherwise protecting adjoining work.

Masonry surfaces shall be free of oil, grease, dirt, laitance, loose material, frost, debris and other contaminants. Mortar joints shall be flush and free of extraneous mortar and chipped or broken masonry.

Metal surfaces shall be dry and be free of rust, scale, loose paint, oil, grease, dirt, frost and debris.

3.2 INSTALLATION, GENERAL

Comply with manufacturer's recommendations except where more stringent requirements are indicated on Drawings or specified, and where Project conditions require extra precautions to ensure satisfactory performance of work.

Application: Apply dampproofing to the following surfaces:

1. Exterior surface of inside wythe of double-wythe, exterior masonry walls, to prevent water-vapor penetration through the wall.

2. Exposed surfaces of structural steel within cavities of exterior masonry walls.

3.3 COLD-APPLIED, ASPHALT EMULSION DAMPPROOFING

Trowel Grade: Trowel apply a coat of mastic asphalt emulsion dampproofing onto substrate at a minimum rate of 4 gal./100 sq. ft., to produce an average, dry-film thickness of 30 mils but not less than 20 mils at any point.

Work dampproofing to seal tightly around wall ties pintels.

Apply dampproofing just prior to installation of polystyrene insulation, to ensure that dampproofing is still tacky when insulation is installed.

1. Prior to installation of insulation over dampproofing by masonry trade, schedule an on-site inspection of the dampproofing installation by the Contracting Officer.

3.4 CLEAN-UP

Surfaces of other work which are stained with dampproofing materials shall be cleaned with a cleaner recommended by dampproofing manufacturer.

3.5 PROTECTION

The completed dampproofing work shall be protected from damage during and

after construction.

-- End of Section --

SECTION 07130

FLUID APPLIED WATERPROOFING

PART 1 GENERAL

1.1 REFERENCES

The publications listed below form a part of this specification to the extent referenced. The publications are referred to in the text by basic designation only.

AMERICAN SOCIETY FOR TESTING AND MATERIALS (ASTM)

ASTM C 67	(1998) Sampling and Testing Brick and Structural Clay Tile
ASTM C 140	(1998) Sampling and Testing Concrete Masonry Units
ASTM C 578	(1995) Rigid, Cellular Polystyrene Thermal Insulation
ASTM C 836	(1995) High Solids Content, Cold Liquid Applied Elastomeric Waterproofing Membrane for Use with Separate Wearing Course
ASTM C 898	(1995) Guide for Use of High Solids Content, Cold Liquid-Applied Elastomeric Waterproofing Membrane with Separate Wearing Course
ASTM C 920	(1998) Specification for Elastomeric Joint Sealants
ASTM D 4258	(1983; R 1992) Practice for Surface Cleaning Concrete for Coating
ASTM D 4259	(1988; R 1992) Practice for Abrading Concrete
ASTM D 4263	(1983; R 1993) Test Method for Indicating Moisture in Concrete by the Plastic Sheet Method
ASTM D 5957	(1998) Guide for Flood Testing Horizontal Waterproofing Installation

1.2 DESCRIPTION OF THE WORK

The work of this Section includes providing fluid applied waterproofing system, rigid insulation, and ballast pavers at Mechanical Room plenum floors, indicated as Exterior Roof Assembly 6 (ERA-6) on the Drawings.

1.3 SUBMITTALS

Government approval is required for submittals with a "GA" designation; submittals having an "FIO" designation are for information only. The following shall be submitted in accordance with Section 01330 SUBMITTAL PROCEDURES:

SD-01 Data

Fluid Applied Waterproofing; GA, Board Insulation; GA, Precast Concrete Pavers.; GA

Include manufacturer's written instructions for evaluating, preparing, and treating substrate, technical data, and tested physical and performance properties of waterproofing.

SD-04 Drawings

Fluid Applied Waterproofing System; GA

Show locations and extent of waterproofing. Include details for substrate joints and cracks, sheet flashings, penetrations, inside and outside corners, tie-ins with adjoining waterproofing, and other termination conditions.

1. Include Setting Drawings showing layout, sizes, sections, profiles, and joint details of concrete pavers.

SD-14 Samples

Fluid Applied Waterproofing; GA, Board Insulation; GA, Precast Concrete Pavers.; GA

Provide samples for the following products:

1. 12-by-12-inch (300-by-300-mm) square of flashing sheet.
2. 12-by-12-inch (300-by-300-mm) square of insulation.
3. Concrete paver, full sized, in each color and texture required.

1.4 QUALITY ASSURANCE

Installer Qualifications: A qualified installer who is authorized, approved, or licensed by waterproofing manufacturer to install manufacturer's products.

Source Limitations: Obtain waterproofing materials through one source from a single manufacturer.

Preinstallation Conference: Conduct conference at Project site. Review

requirements for waterproofing, including surface preparation specified under other Sections, substrate condition and pretreatment, minimum curing period, forecasted weather conditions, special details and sheet flashings, installation procedures, testing and inspection procedures, and protection and repairs.

1.5 DELIVERY, STORAGE, AND HANDLING

Deliver liquid materials to Project site in original containers with seals unbroken, labeled with manufacturer's name, product brand name and type, date of manufacture, shelf life, and directions for storing and mixing with other components.

Store liquid materials in their original undamaged containers in a clean, dry, protected location and within the temperature range required by waterproofing manufacturer.

Remove and replace liquid materials that cannot be applied within their stated shelf life.

Protect stored materials from direct sunlight.

1.6 PROJECT CONDITIONS

Environmental Limitations: Apply waterproofing within the range of ambient and substrate temperatures recommended by waterproofing manufacturer. Do not apply waterproofing to a damp or wet substrate, when relative humidity exceeds 85 percent, or when temperatures are less than 5 deg F (3 deg C) above dew point.

1. Do not apply waterproofing in snow, rain, fog or mist, or when such weather conditions are imminent during application and curing period.

Maintain adequate ventilation during application and curing of waterproofing materials.

1.7 WARRANTY

Special Manufacturer's Warranty: Written warranty, signed by waterproofing manufacturer [and Installer] agreeing to repair or replace waterproofing that does not comply with requirements or that does not remain watertight within specified warranty period.

1. Warranty does not include failure of waterproofing due to failure of substrate prepared and treated according to requirements or formation of new joints and cracks in substrate that exceed 1/16 inch (1.6 mm) in width.

2. Warranty Period: Five years after date of Substantial Completion.

Special Installer's Warranty: Written waterproofing Installer's warranty, signed by Installer, covering Work of this Section, for warranty period of two years.

1. Warranty includes removing and reinstalling insulation, and pavers.

PART 2 PRODUCTS

2.1 MANUFACTURERS

B. Products: Subject to compliance with requirements, provide one of the following products:

1. Carlisle Corporation, Carlisle Coatings & Waterproofing Div.; CCW 703 Liquiseal.
2. Mameco International, Inc.; Vulkem 102.
3. 3M Construction Markets; FC 100.
4. W. R. Grace & Co.; Procor.

2.2 WATERPROOFING MATERIALS

General: Provide waterproofing materials recommended by manufacturer to be compatible with one another and able to develop bond to substrate under conditions of service and application, as demonstrated by waterproofing manufacturer based on testing and field experience.

1. Produce waterproofing materials suitable for application to vertical, horizontal, and sloped substrates, as applicable.
2. Provide waterproofing materials with not less than 90 percent solids.

Cold Fluid-Applied Waterproofing: Comply with ASTM C 836, with manufacturer's written physical requirements.

2.3 AUXILIARY MATERIALS

Primer: Manufacturer's standard, factory-formulated polyurethane or epoxy primer.

Sheet Flashing: 50-mil- (1.3-mm-) minimum, nonstaining uncured sheet neoprene.

1. Adhesive: Manufacturer's recommended contact adhesive.

Reinforcing Strip: Manufacturer's recommended fiberglass mesh or polyester fabric.

D. Joint Sealant: Multicomponent polyurethane sealant, compatible with waterproofing, complying with ASTM C 920 Type M, Class 25; Grade NS for sloping and vertical applications or Grade P for deck applications; Use NT exposure; and as recommended by manufacturer for substrate and joint conditions.

1. Backer Rod: Closed-cell polyethylene foam.

2.4 INSULATION

Insulation Drainage Panels: Extruded-polystyrene board insulation complying with ASTM C 578; of type, density, and compressive strength indicated below; fabricated with rabbeted edges and with one side having ribbed drainage channels.

1. Type VII, 2.2-lb/cu. ft. (35-kg/cu. m) minimum density and 60-psi (414-kPa) minimum compressive strength.

Manufacturers: Subject to compliance with requirements, provide products by one of the following:

1. Diversifoam Products.
2. Dow Chemical Company.
3. Owens Corning.
4. Tenneco Building Products.

2.5 PAVERS

Precast Concrete Pavers: Heavyweight, hydraulically pressed, concrete units, square edged with top edges beveled 3/16 inch (5 mm), manufactured for use as plaza deck pavers; minimum compressive strength 7500 psi (52 MPa), ASTM C 140; absorption not greater than 5 percent, ASTM C 140; no breakage and maximum 1 percent mass loss when tested for freeze-thaw resistance, ASTM C 67; and as follows:

1. Size: 24 in. x 24 in. x 2 in. thick pavers to dimensional tolerances of plus or minus 1/16 inch (1.6 mm) in length, height, and thickness.
2. Colors and Textures: As selected by Contracting Officer from manufacturer's full range.
3. Manufacturers: Subject to compliance with requirements, provide products by one of the following:

   Hanover Architectural Products, Inc.
   Hastings Pavement Co., Inc.
   Roofblok, Ltd.
   Sunny Brook Pressed Concrete Co.
   Wausau Tile, Inc.; Terra-Paving Div.
   Westile Roofing Products.

PART 3 EXECUTION

3.1 EXAMINATION

Examine substrates, areas, and conditions, with Installer present, for compliance with requirements and other conditions affecting performance.

1. Verify that concrete has cured and aged for minimum time period recommended by waterproofing manufacturer.

2. Verify that substrate is visibly dry and free of moisture. Test for capillary moisture by plastic sheet method according to ASTM D 4263.

3. Proceed with installation only after unsatisfactory conditions have been corrected.

3.2 SURFACE PREPARATION

Clean and prepare substrate according to manufacturer's written recommendations. Provide clean, dust-free, and dry substrate for waterproofing application.

Mask off adjoining surfaces not receiving waterproofing to prevent spillage or overspray affecting other construction.

Close off deck drains and other deck penetrations to prevent spillage and migration of waterproofing fluids.

Remove grease, oil, bitumen, form-release agents, paints, curing compounds, and other penetrating contaminants or film-forming coatings from concrete.

1. Abrasive blast clean concrete surfaces uniformly to expose top surface of fine aggregate according to ASTM D 4259 with a self-contained, recirculating, blast-cleaning apparatus. Remove material to provide a sound surface free of laitance, glaze, efflorescence, curing compounds, concrete hardeners, or form-release agents. Remove remaining loose material and clean surfaces according to ASTM D 4258.

Remove fins, ridges, and other projections and fill honeycomb, aggregate pockets, and other voids.

3.3 PREPARATION AT TERMINATIONS AND PENETRATIONS

Prepare vertical and horizontal surfaces at terminations and penetrations through waterproofing and at expansion joints, drains, and sleeves according to ASTM C 898 and manufacturer's written instructions.

Prime substrate, unless otherwise instructed by waterproofing manufacturer.

Apply a double thickness of waterproofing and embed a joint reinforcing strip in preparation coat when recommended by waterproofing manufacturer.

1. Provide sealant cants around penetrations and at inside corners of deck-to-wall butt joints when recommended by waterproofing manufacturer.

3.4 JOINT AND CRACK TREATMENT

Prepare, treat, rout, and fill joints and cracks in substrate according to ASTM C 898 and waterproofing manufacturer's written instructions. Remove dust and dirt from joints and cracks complying with ASTM D 4258 before coating surfaces.

1. Comply with ASTM C 1193 for joint-sealant installation.

2. Apply bond breaker between sealant and preparation strip.

3. Prime substrate and apply a single thickness of preparation strip extending a minimum of 3 inches (75 mm) along each side of joint. Apply a double thickness of waterproofing and embed a joint reinforcing strip in preparation coat.

Install sheet flashing and bond to deck and wall substrates where indicated or required according to waterproofing manufacturer's written instructions.

1. Extend sheet flashings onto perpendicular surfaces and other work penetrating substrate according to ASTM C 898.

3.5 WATERPROOFING APPLICATION

Apply waterproofing according to ASTM C 898 and manufacturer's written instructions.

Start installing waterproofing in presence of manufacturer's technical representative.

Apply primer over prepared substrate.

Mix materials and apply waterproofing by spray, roller, notched squeegee, trowel, or other application method suitable to slope of substrate.

1. Apply one or more coats of waterproofing to obtain a seamless membrane free of entrapped gases, with an average dry film thickness of 60 mils (1.5 mm) and a minimum dry film thickness of 50 mils (1.3 mm) at any point.

2. Apply waterproofing to prepared wall terminations and vertical surfaces.

3. Verify wet film thickness of waterproofing every 100 sq. ft. (9.3 sq. m).

3.6 INSULATION INSTALLATION

Install one or more layers of board insulation to achieve required thickness over waterproofed surfaces. Cut and fit to within 3/4 inch (19 mm) of projections and penetration .

3.7 PAVER INSTALLATION

Install concrete pavers in locations indicated according to manufacturer's written instructions.

Loosely lay pavers over insulation, maintaining a uniform open joint width. Align joint patterns parallel in each direction.

1. Lay out pavers to avoid less-than-half-width pavers at perimeter or other terminations.

Install pavers to not vary more than 1/16 inch (1.6 mm) in elevation

between adjacent pavers or more than 1/16 inch (1.6 mm) from surface plane elevation of individual paver.

3.8 FIELD QUALITY CONTROL

Flood Testing: Flood test each deck area for leaks, according to recommendations in ASTM D 5957, after completing waterproofing but before overlying construction is placed. Install temporary containment assemblies, plug or dam drains, and flood with potable water.

1. Flood to an average depth of 2-1/2 inches (65 mm) with a minimum depth of 1 inch (25 mm) and not exceeding a depth of 4 inches (100 mm). Maintain 2 inches (50 mm) of clearance from top of sheet flashings.

2. Flood each area for 48 hours.

3. After flood testing, repair leaks, repeat flood tests, and make further repairs until waterproofing installation is watertight.

Engage an independent testing agency to observe flood testing and examine underside of decks and terminations for evidence of leaks during flood testing.

3.9 CURING, PROTECTING, AND CLEANING

Cure waterproofing according to manufacturer's written recommendations, taking care to prevent contamination and damage during application stages and curing.

1. Do not permit foot or vehicular traffic on unprotected membrane.

Protect waterproofing from damage and wear during remainder of construction period.

Protect installed board insulation from damage due to ultraviolet light, harmful weather exposures, physical abuse, and other causes. Provide temporary coverings where insulation will be subject to abuse and cannot be concealed and protected by permanent construction immediately after installation.

Clean spillage and soiling from adjacent construction using cleaning agents and procedures recommended by manufacturer of affected construction.

-- End of Section --

SECTION 07131

ELASTOMERIC MEMBRANE WATERPROOFING

PART 1 GENERAL

1.1 REFERENCES

The publications listed below form a part of this specification to the extent referenced. The publications are referred to in the text by basic designation only.

AMERICAN SOCIETY FOR TESTING AND MATERIALS (ASTM)

ASTM D 146	(1997) Felted and Woven Fabrics Saturated with Bituminous Substances for Use in Waterproofing and Roofing
ASTM D 412	(1998) Rubber Properties in Tensio

1.2 SCOPE

Elastomeric membrane waterproofing work includes the following:

1. Membrane waterproofing at exterior side of foundation walls;
2. Membrane waterproofing at exterior side of masonry back-up at 'West' wall;
3. Prefabricated drainage boards over below-grade membrane waterproofing;
4. Protection board over membrane waterproofing against pavement.
5. Rigid insulation boards installed with membrane waterproofing.

1.3 SUBMITTALS

Government approval is required for submittals with a "GA" designation; submittals having an "FIO" designation are for information only. The following shall be submitted in accordance with Section 01330 SUBMITTAL PROCEDURES:

SD-04 Drawings

Waterproofing System; GA.

Detail drawings showing size of sheets, position of sheets and splices, flashing and termination details, and expansion joint details.

SD-06 Instructions

Installation; FIO.

Manufacturer's instructions for installation of the elastomeric membrane, including procedures for preparing the membrane for use, flashing, and splicing. Instructions shall include recommended or required protective covering and procedures for safe handling and use of cleaners, adhesives, and sealants.

SD-13 Certificates

Materials; FIO.

Certificates of compliance attesting that the materials meet specification requirements. Certificates may show qualification of the identical compound in the specified test.

1.4 DELIVERY, STORAGE, AND HANDLING

Materials shall be delivered to the job site in unopened containers bearing the manufacturer's name, brand name, and description of contents. Membrane, flashing, and adhesives shall be stored in clean, dry areas. Storage temperature for adhesives shall be between 60 and 80 degrees F. Protection board shall be stored flat and off the ground.

PART 2 PRODUCTS

2.1 MATERIALS

Adhesives, mastics, cements, tapes, and primers shall be as recommended by the membrane manufacturer and shall be compatible with the material to which they are to be bonded.

2.1.1 Performance Requirements

Performance Requirements: Provide self-adhering sheet membrane waterproofing of rubberized asphalt or butyl integrally bonded to polyethylene sheeting, and having the following minimum features and characteristics:

1. Thickness: 56 mils, minimum.
2. Tensile Strength: 250 psi, ASTM D 412 (Die C).
3. Ultimate Elongation: 300%, ASTM D 412.
4. Pliability Temperature: -25°F., ASTM D 146.
5. Hydrostatic Head Resistance: 150 ft.
6. Water Absorption: Not more than 0.5% weight gain after 48 hours immersion at 70°F., ASTM D 570.

2.1.1.1 Acceptable Products

Provide one of the following products, or approved equal:

1. Bituthene 3000/4000; W.R. Grace and Co.
2. Duremem 700-SM; Pecora Corp.
3. Mel-Rol; W.R. Meadows, Inc.
4. Miridri 860/861; Nicilon/Mirafi

2.1.2 Protection Board

Protection Board: Provide 1/8 in. thick, premolded semi-rigid boards consisting of mineral/asphalt cores and asphalt felt and polyethylene facings, one of the following or equal:

1. W.R. Meadows, PC-2.
2. Pecora, Protection Sheet.

2.2 ACCESSORIES

Flashing, counterflashing, expansion joint covers and corner fillets shall be as recommended by the membrane manufacturer.

Spacer Bars: Provide manufacturer's standard stainless steel spacer bars and attachment system.

Prefabricated Drainage Panels: Three-dimensional, high-impact resistant polymeric grid with a woven monofilament drainage fabric bonded to the grid. Polymeric grid shall have a minimum compressive strength of 15,000 psf per ASTM D 1621 and a minimum flow (Q) of 1/34 gpm/ft of width at 3,600 psf sustained for 300 hours, and hydraulic gradient of 0.01 (ASTM D 4716); filter fabric shall have a permeability coefficient of 0.015 cm/sec; such as Miradrain 6200 by Mirafi, Inc. or approved equal.

2.4 RIGID INSULATION

Rigid Foam Extruded Insulation: Provide rigid, closed-cell, extruded polystyrene complying with ASTM C 578, and the following properties and characteristics:

1. k-Value: 0.20 maximum aged value at 75°F. mean temperature.
2. Compressive Strength: 60 psi .
3. Water Absorption: Less than 0.2% by volume.
4. Water Vapor Permeability: Maximum 1.0 perm-inch.

Thickness: Provide 2 in. thickness unless indicated otherwise indicated. Provide insulation in multiple layers from one of the following manufacturers, or equal:

1. Styrofoam - Dow Chemical Company
2. Foamular - U C Industries, Parsippany, NJ
3. Amofoam - Amoco Foam Products Company

Adhesive for Rigid Foam Insulation: Non-Etch Foam Adhesive by Continental Chemical & Coatings Corp., Woburn, MA, Mastic No. 11 by Dow Chemical Company, Contech PL300 Foam Board Adhesive, or equal.

PART 3 EXECUTION

3.1 PREPARATION

Surfaces to which waterproofing is to be applied shall be clean, smooth, and free from deleterious materials and projections. Holes, honeycomb,

cracks, or cavities shall be pointed or filled and finished flush with Portland cement mortar. Top surfaces of projecting masonry or concrete ledges below grade, except footings, shall be beveled. Before waterproofing is applied, the surfaces to be covered shall be cleaned to remove all dust and foreign matter. Concrete surfaces shall be cured 30 days prior to receiving elastomeric waterproofing and shall not be cured with compounds containing wax or oil. Masonry surfaces to be waterproofed shall have joints struck flush.

3.2 APPLICATION, GENERAL

Waterproofing shall not be applied to wet surfaces. The ambient and surface temperatures shall be above 40 degrees F during application. Membranes shall be handled and installed in accordance with the approved installation instructions. Primers shall be applied in accordance with the membrane manufacturer's printed instructions. Laps shall be oriented so that water will flow over the lap, and not into them. Where any openings or fishmouths appear, joints shall be resealed and rerolled. Wrinkles and buckles shall be avoided in applying membrane and joint reinforcement. Membranes shall be drawn tight during installation without stretching. Self-adhering membrane shall be installed by removing the release sheets on the back of the membrane and applying the tacky surface onto the primed surface. Laps and splices shall be sealed prior to completion of a day's work.

3.2.1 Composite Self-Adhering Membrane Installation at Foundation Walls

On vertical surfaces, membrane shall be applied in lengths up to 8 feet starting at the bottom. Each sheet shall be lapped at edges and ends a minimum of 2-1/2 inches over the preceding sheets. The membrane shall be rolled to adhere with the substrate. Corners and joints shall be double-covered by first applying a 12 inch width of membrane centered along the corner or joint. Inside and outside corners shall then be covered with membrane. Exposed termination edges of membrane on horizontal or vertical surfaces shall be finished with a troweled bead of mastic. Mastic shall be applied around termination edges of membrane and around drains and projections. Mastic shall be applied at the termination of each day's work.

Install prefabricated drainage panels between membrane waterproofing and foundation insulation at all membrane waterproofing below-grade locations. Extend drainage panels from top of footing to 1 inch below finish grade, and to bottom of top course of paving.

Installation of Insulation: Install insulation over drainage panels using specified adhesive. Apply adhesive as recommended by adhesive and insulation manufacturer.

3.2.2 Membrane Installation in Cavity Wall Construction

Where membrane waterproofing is to be installed in cavity of masonry veneer construction, the membrane shall be installed in accordance with membrane manufacturer's requirements and recommendations, and as follows:

1. Starting at the base of the wall cavity, apply first membrane strip horizontally to extend in a single layer across the brick shelf and overlap the foundation wall membrane not less than 2-1/2 inches. Extend membrane in a single layer up back-up wall construction a minimum of 12 inches, but not beyond the first course of veneer ties.

2. Apply a 9 inch wide strip of membrane waterproofing horizontally centered on the masonry tie course and overlapping the membrane strip below a minimum of 4-1/2 inches. Cut membrane at each masonry tie in a single cut and fold membrane tightly around each tie. Cuts shall not extend more than 1/2 inch above each tie.

3. Apply a uniform bead of membrane manufacturer's recommended sealing mastic around each tie. Extend sealing mastic down membrane the full length of the cut.

4. Apply 18 inch wide strip of membrane horizontally tight to next masonry tie course that is 16 inches above the preceeding course of masonry ties. Adhere membrane to wall without pulling or wrinkles. Cut bottom edge at each masonry tie below and press membrane into previously applied sealing mastic. Cut shall not extend more than 1/2 inch above each masonry tie. Overlap 9 inch wide strip of membrane waterproofing below by 6 inches minimum. Smooth any sealing mastic that is forced through cut at each masonry tie to prevent the intrusion of water.

5. Proceed up the back-up wall alternating 9 inch wide and 18 inch wide strips of membrane waterproofing as detailed above, sealing around all masonry ties and other protrusions.

6. At relieving angles at top of area to receive membrane, lap membrane onto bottom of horizontal leg of angle 4 inches.

Installation of Insulation: Install insulation over membrane waterproofing at masonry cavities using specified adhesive. Apply adhesive as recommended by adhesive and insulation manufacturer.

3.3 MISCELLANEOUS REQUIREMENTS

3.3.1 Projections

Projections passing through membrane shall be flashed as specified herein, and as recommended by the manufacturer of the waterproofing membrane.

3.3.2 Counterflashing

Waterproofing connecting with work exposed to the weather shall be counter flashed to form a watertight connection. Upper edge of membrane waterproofing and protective covering shall be counter flashed.

3.3.3 Expansion Joints and Fillets

Expansion joints and corner fillets shall be installed as recommended by

the manufacturer of the waterproofing membrane.

-- End of Section --

SECTION 07140

CEMENTITIOUS WATERPROOFING

PART 1 GENERAL

1.1 REFERENCES

The publications listed below form a part of this specification to the extent referenced. The publications are referred to in the text by basic designation only.

American Society for Testing and Materials (ASTM)

ASTM C 157	Length Change of Hardened Cement Mortar and Concrete
ASTM C 596	Drying Shrinkage of Mortar Containing Portland Cement
ASTM C 827	Early Volume Change of Cementitious Mixtures

1.2 SUBMITTALS

Government approval is required for submittals with a "GA" designation; submittals having an "FIO" designation are for information only. The following shall be submitted in accordance with Section 01330 SUBMITTAL PROCEDURES:

SD-01 Data

Cementitious Waterproofing; GA.

Submit manufacturer's specifications and installation instructions for all products in the waterproofing system, including certifications and other data required to show compliance with the Contract Documents.

SD-13 Certificates

Manufacturer's Review; FIO

Submit written statement, signed by Contractor and waterproofing installer stating that the Drawings and Specifications have been reviewed by qualified representatives of the waterproofing manufacturer, and that they are in agreement that the waterproofing system specified is proper and adequate for the applications shown.

1.3 SCOPE

Cementitious waterproofing shall be applied to all surfaces on the inside of the Freight Elevator pit.

1.4 QUALITY ASSURANCE

1.4.1 Source:

For each material type required for the work of this section, provide primary materials which are the product of one manufacturer. Provide secondary or accessory materials which are acceptable to the manufacturers of the primary materials.

1.4.2 Installer:

A firm with a minimum of three years experience in type of work required by this section and which is acceptable to the manufacturers of the primary materials.

1.5 WARRANTY

General Warranty: Special warranty specified in this Article shall not deprive Owner of other rights Owner may have under other provisions of the Contract Documents and shall be in addition to, and run concurrent with, other warranties made by Contractor under requirements of the Contract Documents.

Special Warranty: Written warranty, signed by Applicator and countersigned by Contractor agreeing to repair or replace waterproofing that does not comply with requirements or that fails to perform as required, and to maintain watertight conditions within specified warranty period. Warranty includes responsibility for removing and replacing other work that conceals modified cement waterproofing. During warranty period, repairs and replacements required because of unusual weather phenomena and other events beyond Contractor's or Applicator's control shall be completed by Contractor or Applicator and paid for by Owner at prevailing rates.

1. Warranty Period: Five years from date of Substantial Completion.

1.6 PRODUCT DELIVERY, STORAGE, AND HANDLING

Deliver materials in manufacturer's unopened containers or bundles fully identified with brand, type, grade, date of manufacture, class, lot number, and other qualifying information.

Store materials in original tightly sealed containers or unopened packages. Materials shall be stored out of weather, off the ground, in dry area, in compliance with manufacturer's maximum storage temperature range.

1.7 JOB CONDITIONS

Maintain manufacturer's current installation instructions at the job site at all times for waterproofing material to be used on the project.

Maintain material storage area at 60 degrees F. or above, for 48 hours

prior to application.

Proceed with work of this section only after substrate construction and penetrating work have been completed.

If waterproofing application must be performed in cold weather, provide continuous heat at a minimum temperature of 55 degrees F., for 24 hours prior to start up, during installation, and 24 hours following completion.

Do not proceed with exterior work during inclement weather. Comply with manufacturer's recommendations for application and curing under specific climatic conditions.

Coordinate application of cementitious waterproofing with work of other Sections.

1.8 PROTECTION

Protect the finish surfaces from damage, resulting from spillage, dripping, and dropping of materials. Prevent materials from entering and clogging drains. Repair and restore or replace work which is soiled or damaged in connection with the performance of the Work.

PART 2 PRODUCTS

2.1 CEMENTITIOUS WATERPROOFING

Provide horizontal and vertical grade, negative-side cementitious waterproofing for application to concrete surfaces of elevator pits, and as follows:

1. Manufacturer/Product: Five Star Waterproof Cement Membrane; U.S. Waterproofing, Inc., or approved equal

2. Shrinkage, Moist State: 0.0%; ASTM C 157 and ASTM C 827.

3. Shrinkage, Cured State: 0.0003%; ASTM C 596.

Where patching is necessary, provide Five Star Waterproofing, manufactured by U.S. Waterproofing, or approved equal patching material.

PART 3 EXECUTION

3.1 CONDITION OF SURFACE

Examine the substrates, adjoining construction and the condition under which the Work is to be installed. Do not proceed with the Work until unsatisfactory conditions have been corrected.

Pre-Installation Meeting: Prior to installation of cementitious waterproofing, meet at the Project site to review the material selections, installation procedures, and coordination of the Work with work of other Sections. Meeting shall include the Contractor, Subcontractor, manufacturer's representatives, inspection and testing services (if any),

and any other subcontractor whose work requires coordination with this work.

Surfaces to receive waterproofing shall be broom-clean, thoroughly dry and free of moisture. Mortar and grout shall have cured thoroughly.

Walls shall be wire brush cleaned, and then washed to ensure proper bonding surfaces for the waterproofing application.

Surfaces shall not contain any grease, oil, or any other contaminants which could affect the complete bonding of the waterproof membrane to the concrete surface.

3.2 INSTALLATION

Install and complete the system to ensure that no water leakage occurs.

At the start of the installation and periodically as work progresses, provide supervisory, inspection, and advisory services of the manufacturer's technical representative at job site as often as deemed necessary by manufacturer.

Fill non-moving cracks and joints with sealant or other compounds as recommended by the waterproofing materials manufacturer for compatibility with the waterproofing.

Allow waterproofing to cure properly before backfilling. During this period, block off traffic and protect waterproofing from physical damage.

Mix and apply materials in accordance with manufacturer's instructions and recommendations for appropriate substrate. Use mortar mixer or electric drill mixer.

Apply waterproofing to horizontal and vertical surfaces with trowel or plaster sprayer in single coat 1/8 in. thick as recommended by the waterproofing materials manufacturer, completely filling voids, holes, and cracks, leaving no pinholes or uncovered areas.

Proper curing and protection of waterproofing: For hot weather or windy conditions and for maximum wear resistance, as soon as waterproofing will not be damaged by recommended curing material and water, cure surface as recommended by waterproofing materials manufacturer.

Protect waterproofing from non-pedestrian traffic for 24 hours. Protect waterproofing from freezing, rain and hydrostatic pressures until it reaches its normal 24 hour strength.

3.3 FIELD QUALITY CONTROL

Inspect cementitious membrane waterproofing 24 hours after application to ensure that coating has cured to hard finish, without softness and dusting.

Chip and patch cured membrane to determine whether or not required minimum thickness has been applied in those areas where inadequate coverage is suspected.

Inspect for complete coverage to ensure that holes, cracks, and voids have been filled leaving no pinholes or uncovered areas, and that joints and cracks have been treated properly.

3.4 CLEAN-UP

Upon completion of cementitious waterproofing, clean stains, remove masking, protections, equipment, material, and debris from work and storage areas, and leave areas in an undamaged and acceptable condition.

-- End of Section --

SECTION 07141

METAL OXIDE WATERPROOFING

PART 1 GENERAL

1.1 REFERENCES

The publications listed below form a part of this specification to the extent referenced. The publications are referred to in the text by basic designation only.

American Society for Testing and Materials (ASTM)

ASTM C 144	Aggregate for Masonry Mortar
ASTM C 150	Portland Cement

1.2 SUBMITTALS

Government approval is required for submittals with a "GA" designation; submittals having an "FIO" designation are for information only. The following shall be submitted in accordance with Section 01330 SUBMITTAL PROCEDURES:

SD-01 Data

Metal Oxide Waterproofing; FIO.

Submit manufacturer's published specifications and installation instructions for waterproofing system, including certifications and other data as required to show compliance with Contract Documents.

SD-08 Statements

Metal Oxide Waterproofing; FIO.

Manufacturer's Review: Submit signed written statement that Contract Documents have been reviewed by qualified representatives of waterproofing manufacturer, and that they are in agreement that waterproofing system specified is proper and adequate for applications shown.

Substrate Acceptability: Submit certified statement issued by manufacturer of waterproofing materials and countersigned by applicator, attesting that areas and surfaces designated to receive waterproofing have been inspected and found satisfactory to receive Work covered under this Section and do not conflict with warranty requirements. Application of materials will be construed as acceptance of surfaces.

Statement of Supervision: Upon completion of Work, submit a written

statement signed by manufacturer stating that field supervision of manufacturer's representative was sufficient to insure proper application of materials, that Work was installed in accordance with Contract Documents, and that installation is acceptable to manufacturer.

SD-13 Certificates

Metal Oxide Waterproofing; FIO.

Furnish certificate accompanying each delivery of metal oxide waterproofing material indicating compliance with Contract requirements.

1.3 SCOPE

Metal oxide waterproofing shall be applied to all surfaces on the interior of the passenger elevator pit.

1.4 QUALITY ASSURANCE

Metal oxide waterproofing work shall be performed by a firm having at least five years experience in installation of materials specified herein on projects comparable to this Project. The firm shall have approval of metal oxide waterproofing materials manufacturer.

Waterproofing manufacturer shall provide evidence indicating that specified materials have been successfully utilized on work of similar scope to that shown and specified for this Project, completed and in use for two years without any evidence of failure.

1.5 WARRANTY

Provide written warranty stating that work executed under this Section will be free from defects of materials and workmanship for five years from date of Substantial Completion, and that leaks and defects within this period will be remedied on written notice at no additional cost to Owner. Warranty shall be in writing and shall be signed by Contractor, and primary waterproofing materials manufacturer. Warranty shall include removal and replacement of materials as required to repair waterproofing, at no cost to Owner.

1.6 PRODUCT DELIVERY, STORAGE, AND HANDLING

Deliver materials in manufacturer's unopened containers or bundles fully identified with brand, type, grade, date of manufacture, class, lot number, and other qualifying information.

Store materials in original tightly sealed containers or unopened packages. Materials shall be stored out of weather, off ground, in dry area, in compliance with manufacturer's maximum storage temperature range.

1.7 JOB CONDITIONS

Maintain manufacturer's current installation instructions at job site at times for waterproofing material to be used on Project.

Maintain material storage area at 60 deg. F. or above, for 48 hours prior to application.

Proceed with work of this section only after substrate construction and penetrating work have been completed.

If waterproofing application must be performed in cold weather, provide continuous heat at a minimum temperature of 55 deg. F., for 24 hours prior to start up, during installation, and 24 hours following completion.

Coordinate application of metal oxide waterproofing with work of other trades.

1.8 PROTECTION

Protect finish surfaces from damage, resulting from spillage, dripping, and dropping of materials. Prevent materials from entering and clogging drains. Repair and restore or replace work which is soiled or damaged in connection with performance of Work.

PART 2 PRODUCTS

2.1 METAL OXIDE WATERPROOFING

Provide a complete metal oxide waterproofing system for horizontal and vertical surfaces equal to one of the following:

1. Ironite; Ironite Metallic Waterproofing.
2. Euco Iron Waterpeller; Euclid Chemical Co.
3. Ferrolith W; Sonneborn Building Products Div.

Provide metallic waterproofing admixture consisting of fine filings from clean cast iron, mixed with 5 to 7% by volume of a chemical oxidizing agent. Particle size shall be as follows:

1. 100% of mixture passing No. 35 sieve. 90% passing No. 40 sieve. No less than 45% nor more than 60% passing No. 100 sieve. No more than 25% passing a No. 200 sieve.

Provide filings containing no more than 1% by weight of non-ferrous metal and containing no foreign substances other than non-ferrous metal in excess of 0.10%.

2.2 CEMENT

Portland cement conforming to ASTM C 150, Type I.

2.3 SAND

Clean, washed, uniformly graded masonry sand conforming to ASTM C 144, from single source. Source of supply shall not be changed during course of job without written permission of Contracting Officer.

PART 3 EXECUTION

3.1 CONDITION OF SURFACE

Examine substrates, adjoining construction and conditions under which Work is to be installed. Do not proceed with Work until unsatisfactory conditions have been corrected.

Pre-Installation Meeting: Prior to installation of metal oxide waterproofing, meet at Project site to review material selections, installation procedures, and coordination of Work with other trades. Meeting shall include Contracting Officer, Contractor, Subcontractor, manufacturer's representatives, inspection and testing services (if any), and any other subcontractor whose work requires coordination with this work.

Surfaces to receive waterproofing shall be thoroughly dry and free of moisture, grease, oil, and other contaminants. Allow concrete to cure a minimum of 28 days before application of waterproofing.

Prepare concrete surfaces as recommended by waterproofing manufacturer. Clean substrates and remove projections, fill voids, and cut back ties. Mechanically roughen surfaces to receive waterproofing.

3.2 INSTALLATION - GENERAL

Install and complete system to ensure that no water leakage occurs through waterproofing system.

At start of installation and periodically as work progresses, provide services of manufacturer's technical representative at Project site as necessary manufacturer to advise on phases of this Work.

Install system in accordance with manufacturer's published instructions.

Fill non-moving cracks and joints with sealant or other compounds as recommended by waterproofing materials manufacturer for compatibility with waterproofing.

Allow waterproofing to cure properly. During this period, block off traffic and protect waterproofing from physical damage.

3.3 METAL OXIDE WATERPROOFING

After concrete surfaces have been prepared properly, dampen thoroughly and give 1/16 in. bond coat consisting of following:

1. Grout coat brushed on at rate of 1 part Portland cement, 1 part sand, and 20 lb. of metallic compound per sack of cement.

2. Skim coat troweled on at rate of 1 part Portland cement, 2 parts sand, and 20 lb. of metallic compound per sack of cement.

Bond coat shall be followed with scratch coat mixed in proportions of 1 part Portland cement, 2 parts sand, and 20 lb. of metallic waterproofing

compound added for each sack of cement troweled on to a thickness of 7/16 in. and well bonded to concrete wall surface. This coat shall be left scratched to insure adequate bonding for finish coat.

After scratch coat has set sufficiently and wall surface is thoroughly dampened, apply finish coat of total thickness of 1/4 in. Finish coat shall consist of the following:

1. Grout coat brushed on at rate of 1 part Portland cement, 1 part sand, and 20 lb. metallic compound per sack of cement.

2. Skim coat troweled on at rate of 1 part Portland cement, 2 parts sand, and no metallic compound per sack of cement to a total thickness of 1/16 in.

While finish coat is still moist trowel on 3/16 in. floated plastered coat at rate of 1 part Portland cement, 2 parts sand, and no metallic compound per sack of cement to produce dense floated finish.

1. Grout coats shall have brush consistency.

2. Trowel application shall have workable plaster consistency.

Floor area shall be washed clean and ponding water shall be removed. A grout coat of 1 part Portland cement, 0 parts sand, and 20 lb. metallic compound per sack cement shall then be applied and broomed thoroughly into slab.

1. Immediately following application of grout coat, pour cement topping of 1 part Portland cement and 2 parts sand by volume, approximately one inch in thickness, to approximately 1 in. in thickness. Topping shall be applied in uniform thickness, screeded to proper elevation as required, and floated and steel troweled to dense smooth surface.

3.4 WATER TESTING

Water test horizontal areas. Do not water test within 48 hours after application of waterproofing or until waterproofing is fully cured. Water testing shall include flooding of entire area of work to minimum depth of 1-1/2 in. above high points either by section or in its entirety for 48 hours.

Where leaks occur, area shall be drained, thoroughly dried, repaired, and then retested as above.

Contracting Officer, Contractor, and manufacturer shall verify that portion of area tested has not shown any evidence of leakage by signing a Drawing which indicates areas tested.

3.5 CLEAN-UP

Upon completion of metal oxide waterproofing, clean stains, remove masking, protections, equipment, material, and debris from work and storage area,

and leave those areas in an undamaged and acceptable condition.

-- End of Section --

SECTION 07146

SWIMMING POOL CEMENTITIOUS WATERPROOFING

PART 1 GENERAL

1.1 DESCRIPTION OF WORK

Provide cementitious waterproofing at swimming pool gutters and surge/backwash pits/chambers, including, but not limited to, proper surface preparation, application and curing to achieve a homogeneous waterproof surface.

1.2 SUBMITTALS

Government approval is required for submittals with a "GA" designation; submittals having an "FIO" designation are for information only. The following shall be submitted in accordance with Section 01330 SUBMITTAL PROCEDURES:

SD-01 Data

Manufacturer's Literature; FIO.

Submit manufacturer's standard catalog cuts for all products.

SD-14 Samples

Sample Finishes; GA.

Submit minimum 12 in. by 12 in. samples of finish cementitious waterproofing, showing finish, color, and texture to be expected in the finish work.

1.3 PRODUCT DELIVERY AND STORAGE

Deliver manufactured materials to site in manufacturers' original unbroken packages or containers bearing manufacturers' name and brand labels. Keep cementitious materials dry until ready to be used and stored off the ground, under cover, and away from damp surfaces

1.4 JOB CONDITIONS

Apply waterproofing at swimming pool surge tank and gutters only when ambient temperature is above 40°F and below 90°F, and protect applied coating from rapid drying by sun or wind until curing is completed.

PART 2 PRODUCTS

2.1 MATERIALS

2.1.1 Cementitious Waterproofing:

"Thoroseal" cement based, aggregate type, heavy duty, waterproof coating for concrete or masonry, as manufactured by Thoro System Products, or approved equal.

2.1.2 Bonding Agent:

"Acryl 60" liquid compound of acrylic polymers and modifiers, as manufactured by Thoro System Products, or approved equal.

2.1.3 Water:

Clean, fresh, from domestic potable source.

2.2 PROPORTIONS AND MIXING

2.2.1 General:

Materials are specified on a volume basis and shall be measured in approved containers which will insure that the specified proportions will be controlled and accurately maintained during the progress of the work. Measuring materials with shovels ("shovel count") is not permitted.

2.2.2 Waterproof Coating:

Mix one 50 pound bag of "Thoroseal" with liquid consisting of 2 quarts "Acryl 60" and 6 quarts of clean water.

2.2.3 Mixing:

Perform mixing in approved mechanical mixers of the type in which quantity of water can be controlled accurately and uniformly. Mix to the manufacturers recommendations for swimming pool applications. Discard material which has begun to set before it is used; retempering is not allowed. Do not use any caked or lumpy materials. Completely empty mixer and mixing boxes after each batch is mixed and keep free of old material.

PART 3 EXECUTION

3.1 PREPARATION OF SURFACES

Surfaces to be coated must be smooth and clean. Sandblast entire surface to remove projections, loose particles, foreign matter, and make sufficiently rough to provide a strong mechanical bond. Chip, sandblast, or grind off all defective materials and foreign matter. Repair all cracks with "Waterplug" concrete patch, or approved equal. All areas of loose plaster discovered shall be completely removed down to rough concrete. Prior to coating thoroughly wash entire surface with 2,000 psi high pressure water. Wet cementitious base surfaces with a fine fog water spray to produce a uniformly moist condition and check gutter grates and accessories for correct alignment before coating is started. Do not apply

coating to base surfaces containing frost. Install temporary coverings as required to protect adjoining surfaces from staining or damage by waterproofing operations.

3.2 APPLICATION OF WATERPROOFING

3.2.1 General:

Apply waterproof coating to minimum 1/8 inch thickness at any location. Apply finish coating by hand with tampico fiber brush (do not use a paint brush).

3.2.2 Workmanship:

Apply waterproof coating in two coats with second coat applied the next day or before material has become too dry or glazed for good bond. Dampen surface immediately ahead of application. Brush on two coats of waterproof coating, each with a minimum of 2 pounds per square yard, for a total of 4 pounds per square yard. Float final brushed on coat with a damp sponge 15 minutes after application to provide a smooth finish without waves, cracks, ridges, pits, projections, or other imperfections. Form coating carefully around curves and angles.

3.2.3 Curing:

Cure waterproof coating with fine fog water spray applied to finish coat three or four times at 8-hour intervals or as drying conditions require to prevent too rapid drying. Do not fill with water for at least 8 days.

3.2.4 Patching and Cleaning Up:

Upon completion, cut out and patch loose, cracked, damaged, or defective waterproof coating; patches matching existing coating in texture, color, and finish, flush with adjoining coating. Remove waterproof coating droppings or spatterings from all surfaces. Leave surfaces in clean, unblemished condition ready for pool filling. Remove protective coverings from adjoining surfaces. Remove rubbish and debris from the site.

-- End of Section --

SECTION 07210

BUILDING INSULATION

PART 1 GENERAL

1.1 REFERENCES

The publications listed below form a part of this specification to the extent referenced. The publications are referred to in the text by basic designation only.

AMERICAN SOCIETY FOR TESTING AND MATERIALS (ASTM)

ASTM C 578	(1995) Rigid, Cellular Polystyrene Thermal Insulation
ASTM C 665	(1998) Mineral-Fiber Blanket Thermal Insulation for Light Frame Construction and Manufactured Housin

1.2 SUBMITTALS

Government approval is required for submittals with a "GA" designation; submittals having an "FIO" designation are for information only. The following shall be submitted in accordance with Section 01330 SUBMITTAL PROCEDURES:

SD-01 Data

Product Data; GA.

Submit manufacturer's printed product data, specifications, standard details, installation instructions, use limitations and recommendations for each material used. Provide certifications that materials and systems comply with specified requirements.

1.3 QUALITY ASSURANCE

1.3.1 Fire Performance:

Provide products which meet or exceed flammability ratings indicated or required by authorities having jurisdiction.

1.3.2 Thickness:

Where R values are indicated on Drawings, provide thicknesses of insulation materials required to achieve value specified, unless required otherwise.

1.4 PRODUCT DELIVERY, STORAGE AND HANDLING

Materials shall be delivered to site in original, unopened packages or containers bearing manufacturer's names, brand names, and types and thicknesses of contents.

Store off floor in interior spaces, adequately protected against damage from all sources.

PART 2 PRODUCTS

2.1 FIBERGLASS BLANKET/BATT INSULATION

2.1.1 Unfaced Mineral-Fiber Blanket Insulation:

Thermal insulation combining mineral fibers of type described below with thermosetting resins to comply with ASTM C 665, Type I (blankets without membrane facing).

1. Mineral-Fiber Type: Fibers manufactured from glass.
2. Surface-Burning Characteristics: Maximum flame-spread and smoke-developed indices of 25 and 50, respectively.
3. Thermal Performance: Minimum of R-19 for 6-1/2 in. thickness.

2.2 RIGID EXTRUDED POLYSTYRENE INSULATION

2.2.1 Rigid Perimeter Insulation:

Provide extruded polystyrene insulation conforming to ASTM C 578, minimum 25 lbs. per sq. in. compressive strength at 0.1 in. deformation, 2.0 lbs. per cu. ft. density "K" factor of 0.185 at 40 deg. F. and 0.20 at 75 deg. F. per in. thickness, water vapor transmission of 1.0 perm, and water absorption by volume of 0.1%. Provide boards with manufacturer's standard tongue and groove edges. Provide one of the following products, or Contracting Officer approved equal:

1. "Amofoam-SL" by Amoco Foam Products Company.
2. "Styrofoam Tongue & Groove" by Dow Chemical Co.
3. "Foamular 250 T & G" by UC Industries, Inc.

2.2.2 Rigid High Compressive Strength Insulation for Use as Fill Under Platforms and Stairs:

Provide extruded polystyrene insulation conforming to ASTM C 578, minimum 60 lbs. per sq. in. compressive strength. Provide the following product, or Contracting Officer approved equal:

1. "Styrofoam PlazaMate Highload 60" by Dow Chemical Co.

2.2.3 Adhesive for Rigid Foam Insulation:

Non-Etch Foam Adhesive by Continental Chemical & Coatings Corp., Woburn, MA, Mastic No. 11 by Dow Chemical Company, Contech PL300 Foam Board Adhesive, or equal.

PART 3 EXECUTION

3.1 INSTALLATION - GENERAL

Insulating materials and installation shall be in strict accordance with manufacturer's printed instructions and specific recommendations, and health and safety precautions, for each of project conditions and in accordance with governing laws and building code.

3.2 FIBERGLASS BLANKET/BATT INSULATION

Install continuous application of fiberglass blanket/batt insulation where indicated. Fit batts tightly together and to framing members, furring strips, penetrations, and abutting construction for positive thermal seal. Carry continuously behind light cans, junction boxes, etc.

Install blanket/batt insulation, fully filling spaces between steel stud wall system members and between facings/sheathings. Fit batts tightly together at joints. Pack tightly into corners, and fill double studs and box headers and sills, and other similar voids, with insulation to maintain insulation integrity across entire wall area.

3.3 RIGID PERIMETER INSULATION

Install rigid insulation against exterior face of foundation walls and elsewhere as indicated. All rigid insulation at foundation walls shall be 2 inches thick unless otherwise indicated. Rigid insulation shall extend from top of footings to 1 inch below finish grade (unless indicated otherwise on Drawings), and to bottom of pavement top course where pavement abuts foundation wall. Chamfer top of rigid insulation at a 1 in 1 slope at finish grade. Install panels in uniform widths in continuous rows with joints butted at edges of adjoining panels and against penetrations.

Where rigid insulation is to be applied below grade against waterproofing membrane, confirm that drainage course work is complete before proceeding. Secure insulation in place until backfill operations are complete. Where insulation is to be applied to waterproofing membrane that will not be backfilled against, secure insulation in place using specified adhesive.

Protect insulation from damage until completely covered by the finished work, including backfilling.

3.4 CLEANING

Upon completion of building insulation work in any area, remove rubbish and debris from work area and leave in broom clean condition.

-- End of Section --

SECTION 07220

ROOF INSULATION

PART 1 GENERAL

1.1 REFERENCES

The publications listed below form a part of this specification to the extent referenced. The publications are referred to in the text by basic designation only.

AMERICAN SOCIETY FOR TESTING AND MATERIALS (ASTM)

ASTM C 208	(1995) Cellulosic Fiber Insulating Board
ASTM C 578	(1995) Rigid, Cellular Polystyrene Thermal Insulation
ASTM C 728	(1997) Perlite Thermal Insulation Board
ASTM C 1289	(1995) Faced Rigid Cellular Polyisocyanurate Thermal Insulation Board
ASTM D 41	(1994) Asphalt Primer Used in Roofing, Dampproofing, and Waterproofing
ASTM D 312	(1995a) Asphalt Used in Roofing
ASTM D 4586	(1993) Asphalt Roof Cement, Asbestos Free
ASTM F 547	(1977; R 1990) Definitions of Terms Relating to Nails for Use with Wood and Wood-Base Materials

FACTORY MUTUAL ENGINEERING AND RESEARCH (FM)

FM P9513	(1996) Loss Prevention Data for Roofing Contractors
FM P7825a	(1998) Approval Guide Fire Protection
FM P7825c	(1998) Approval Guide Building Materials

UNDERWRITERS LABORATORIES (UL)

UL Bld Mat Dir	(1998) Building Materials Directory

1.2 SUBMITTALS

Government approval is required for submittals with a "GA" designation; submittals having an "FIO" designation are for information only. The following shall be submitted in accordance with Section 01330 SUBMITTAL PROCEDURES:

SD-06 Instructions

Application of Insulation; FIO.

Insulation manufacturer's recommendations for the application and installation of insulation.

SD-08 Statements

Inspection; FIO.

The inspection procedure for insulation installation, prior to start of roof insulation work.

SD-13 Certificates

Insulation; FIO.

Certificate attesting that the expanded perlite or polyisocyanurate insulation contains recovered material and showing estimated percent of recovered material. Certificates of compliance for felt materials.

1.3 STORAGE OF MATERIALS

Extruded polystyrene shall be stored in accordance with manufacturer's instructions. Other insulation, base sheet, and felt shall be kept dry at all times, before, during, and after delivery to the site and shall be stored in an enclosed building or in a closed trailer. Wet insulation, wet base sheet or wet felt shall be permanently removed from the site. Felts shall be stacked on end one level high. Felt rolls shall be maintained at a temperature above 50 degrees F for 24 hours immediately before laying.

1.4 FIRE CLASSIFICATION

Insulation shall have been tested as part of a roof construction assembly of the type used in this project and the construction shall be listed as Fire-Classified in UL Bld Mat Dir or Class I in FM P7825a, except for installation on poured concrete decks.

PART 2 PRODUCTS

2.1 BITUMINOUS MATERIALS

Bituminous materials shall conform to the following requirements:

2.1.1 Asphalt Bitumen

ASTM D 312, Type III or IV. Asphalt flash point, finished blowing temperature, and equiviscous temperature (EVT) shall be indicated on bills

of lading or on individual containers.

2.1.2 Asphalt Cement

ASTM D 4586, Type I for horizontal surfaces; Type II for vertical surfaces.

2.1.3 Asphalt Primer

ASTM D 41.

2.2 INSULATION

General: Both uniform thickness, and tapered insulation is required for this Project.

Insulation shall be a standard product of the manufacturer and shall be factory marked with the manufacturer's name or trade mark, the material specification number, the R-value at 75 degrees F, and the thickness. Minimum thickness shall be as recommended by the manufacturer. Boards shall be marked individually. The thermal resistance of insulation shall be not less than the R-value shown on the drawings. The insulation manufacturing process shall not include chlorofluoro carbons (CFC) or formaldehydes. Insulation and fiberboard shall contain the highest practicable percentage of material which has been recovered or diverted from solid waste (e.g., postconsumer waste), but not including material reused in a manufacturing process. Where two materials have comparable price and performance, the one having the higher recovered material content shall be selected. Fire barrier/fiberglass faced gypsum board, recovery board, and insulation shall be a combination of the following materials for each type required:

2.2.1 Fire Barrier/Fiberglass Faced Gypsum Board

Glass-mat, water-resistant gypsum board, ASTM C 1177, of type and thickness indicated below:

1. Type and Thickness: Type X, 5/8 inch.
2. Product: Subject to compliance with requirements, provide "Dens-Deck" manufactured by Georgia-Pacific Corp., or approved equal

2.2.2 Expanded-Perlite Recovery Board

ASTM C 728 with a minimum recovered material content of 23 percent of the expanded perlite portion of the board.

2.2.3 Fiberboard Recovery Board and Cants

ASTM C 208 Type II, Grade 1 or 2, roof insulating board with a minimum recovered material content of 80 percent, treated with sizing, wax or bituminous impregnation. Bituminous impregnation shall be limited to 4 percent by weight when used over steel decks.

2.2.4 Polyisocyanurate

Note: Use polyisocyanurate insulation only on locations where insulation is indicated below roof membrane.

ASTM C 1289, Type I, or ASTM C 1289 Type II, having minimum recovered material content of 9 percent by weight of the polyisocyanurate portion of the board.

2.2.5 Extruded Polystyrene

Note: Use extruded polystyrene insulation only on locations where insulation is indicated to be installed on top of membrane, such as in IRMA situation.

ASTM C 578, with density of 2.1 lbs. per cu. ft., thermal conductivity (K) of 0.20 at 75o. and 0.185 at 0oF., compressive strength of 25 psi at 10% deformation, coefficient of linear thermal, expansion of 3.5 x 10-5, water absorption of 0.1% by volume, and a perm-rating of 1.0 perm-in. maximum, in accordance with appropriate ASTM tests.

2.3 NAILS AND FASTENERS

Nails and fasteners shall conform to the following requirements:

2.3.1 Nails for Fastening Insulation to Flush Mounted Wood Nailers

ASTM F 547 of sufficient length to hold insulation securely in place.

2.3.2 Fasteners

Insulation manufacturer's recommendations except holding power, when driven, shall be not less than 120 poundseach in steel deck. Fasteners for steel or concrete decks shall conform to FM P7825c for Class I roof deck construction, and shall be spaced to withstand an uplift pressure of 90 pounds per square foot.

2.3.3 Metal Disks

Flat and not less than 30 gauge thickness. Disks used with nails or fasteners for securing fiberboard insulation shall be minimum l inch diameter. Disks used with nails or fasteners for securing other board insulation shall be minimum 2-1/8 inches in diameter.

2.4 VAPOR RETARDER

ASTM D 6163, Type I, fiberglass mat coated both sides with SBS rubber-modified asphalt.

2.5 WOOD NAILERS

Wood nailers shall conform to Section 06100 ROUGH CARPENTRY, including preservative treatment. Edge nailers shall be not less than nominal 6 inches wide and of thickness to finish flush with the top surface of the insulation. Surface mounted nailers shall be a nominal 3 inches wide by

the full thickness of the insulation.

PART 3 EXECUTION

3.1 COORDINATION REQUIREMENTS

Insulation and roofing membrane shall be finished in one operation up to the line of termination at the end of each day's work. Completed sections shall be waterproofed when more than one day is required to finish the roofing. Phased construction will not be permitted.

3.2 ENVIRONMENTAL CONDITIONS

Air temperature shall be above 40 degrees F and there shall be no visible ice, frost, or moisture on the roof deck when the insulation and roofing are installed.

3.3 SUBSTRATE PREPARATION

The substrate construction of any bay or section of the building shall be completed before insulation or vapor retarder work is begun thereon. Insulation or vapor retarder applied directly on lightweight insulating concrete or gypsum shall not be scheduled until the insulating concrete passes the air-dry density test specified in Section 03300CAST-IN-PLACE STRUCTURAL CONCRETE. Insulation or vapor retarder applied directly on concrete shall not be scheduled until frothing or bubbling does not occur when hot bitumen is applied to the concrete and until the hot bitumen sticks tightly to the concrete. Vents and other items penetrating the roof shall be secured in position and properly prepared for flashing. Prior to application of vapor retarder or insulation, substrate joints shall be covered with a 4 inch strip of roofing felt, embedded in and coated with asphalt cement. Substrate surface shall be smooth, clean, and dry at time of application.

3.4 HEATING OF ASPHALT

Asphalt shall not be heated higher than 75 degrees F above the EVT or 50 degrees F below the flash point, or 525 degrees F, whichever is lower. EVT and flash point temperatures of asphalt in the kettle shall be conspicuously posted on the kettle. Kettle shall be provided with automatic thermostatic controls and an accurate thermometer. Kettle operators shall be in attendance at all times during heating to ensure that the maximum temperature is not exceeded. Asphalt shall be applied within a range of 25 degrees F below or above the EVT, or as specified by the manufacturer. Application temperature shall be measured at the mop bucket or mechanical applicator. Asphalt at a temperature below this range shall be returned to the kettle. Flame-heated equipment shall not be placed on the roof.

Kettle shall be located to prevent fumes and odors from impacting surrounding government operations.

3.5 VAPOR RETARDER

3.5.1 General Application

Vapor retarder shall consist of a single ply of specified vapor retarder material, mopped at right angle to the slope, with 6 inch end laps staggered at least 12 inches. The full starter ply and full succeeding ply sheets shall be placed, in succession, in hot asphalt immediately behind the applicator. Each ply shall be solid mopped in not less than 20 nor more than 30 pounds of asphalt per square. A squeegee shall be used to embed the felts, eliminate air pockets and obtain adhesion between the plies. Side and end laps shall be completely sealed. Asphalt shall be visible beyond all edges of each ply as it is being installed. Plies shall be laid free of wrinkles, creases or fishmouths. Workers shall not walk on mopped surfaces when the asphalt is sticky.

3.5.2 Edge Requirements

At walls, eaves and rakes, the vapor retarder shall be extended 9 inches, or separate plies shall be extended 9 inches, with not less than 9 inches on the substrate, and the extended portion turned back and mopped in over the top of the vapor retarder. At roof penetrations other than walls, eaves and rakes, the vapor retarder or separate plies shall be extended 9 inches to form a lap which shall later be folded back over the edge of the insulation. Asphalt roof cement shall be used under the vapor retarder for at least 9 inches from walls, eaves, rakes and other penetrations.

3.5.3 Over Concrete Decks and First Layer of Insulation on Steel Decks

The vapor retarder shall be applied as specified above.

3.6 INSTALLATION OF WOOD NAILERS

Nailers shall be secured to cast-in-place deck materials by not less than 3/8 inch diameter anchors embedded in the deck not over 4 feet on centers. Nailers shall be secured to precast deck materials and to steel decks with 1/2 in. diameter galvanized bolts, nuts and washers spaced at 32 in. on center maximum. Bolt anchors shall have nuts and washers countersunk, and bolts shall be cut flush with top of nailer. Powder-actuated fasteners, sized and spaced for nailer anchorage equivalent to that specified and indicated, may be used when approved. Surface mounted nailers shall be installed parallel with the roof slope and shall be spaced not over 4 feet face-to-face, except that where the insulation units are less than 4 feet in length the nailers shall be spaced to minimize cutting of the insulation.

3.7 APPLICATION OF INSULATION

Insulation shall be laid in two or more layers. Units of insulation shall be laid in courses parallel with the roof slope. End joints shall be staggered. Insulation shall be cut to fit neatly against adjoining surfaces. Joints between insulation boards shall not exceed 1/4 inch. Joints in successive layers shall be staggered with respect to joints of preceding layer. Where insulation is applied over steel deck, long edge joints shall continuously bear on surfaces of the steel deck. Insulation which can be readily lifted after installation is not considered to be adequately secured. Insulation shall be applied so that all roof

insulation applied each day is waterproofed the same day. Phased construction will not be permitted. Application of impermeable faced insulation shall be performed without damage to the facing.

3.7.1 Mechanical Fastening

On steel decks, or any slope exceeding 1/2 inch per foot, insulation shall be mechanically fastened. Method of attachment shall be in accordance with recommendations of the insulation manufacturer and requirements specified.

3.7.2 Steel Decks

Uninsulated steel decks shall have insulation applied to span the steel deck flutes and to act as an underlayment for the roof membrane. First layer of insulation on steel deck shall be compatible with mechanical fastening.

3.7.3 Foam Insulation

Polyisocyanurate, or polystyrene foam insulations shall be isolated from moddified bitumen membrane by a separate or composite layer of perlite board, or fiberboard. Polystyrene shall not be exposed to solvent-base adhesive, coal-tar bitumen or to asphalt.

3.7.4 Installation

Except for the first layer on steel deck, insulation layers shall be laid in solid moppings of hot asphalt applied at a rate of at least 20 pounds per square. Asphalt shall not be applied further than one panel length ahead of roof insulation being installed. Where roof slopes are greater than 1/2 inch per foot, roof insulation shall be held in place by both asphalt mopping and mechanical fasteners. Asphalt primer shall be applied at the rate of 1 gallon per square over the entire surface to be mopped when the insulation is applied over concrete deck. The edges of insulation boards adjoining vented nailers shall be kept free of asphalt.

3.7.5 Protection Requirements

The insulation shall be kept dry at all times. Insulation boards shall not be kicked into position. Exposed edges of the insulation shall be protected by cutoffs at the end of each work day or whenever precipitation is imminent. Cutoffs shall be 2 layers of bituminous-saturated felt set in plastic bituminous cement. Cutoffs shall be removed when work is resumed. Edges of insulation at open spaces between insulation and parapets or other walls and spaces at curbs, scuttles, and expansion joints, shall be protected until permanent roofing and flashing is applied. Storing, walking, wheeling, or trucking directly on insulation or on roofed surfaces will not be permitted. Smooth, clean board or plank walkways, runways, and platforms shall be used, as necessary to distribute weight to conform to indicated live load limits of roof construction.

3.8 INSPECTION

The Contractor shall establish and maintain an inspection procedure to

assure compliance of the installed roof insulation with the contract requirements. Any work found not to be in compliance with the contract shall be promptly removed and replaced or corrected in an approved manner. Quality control shall include, but not be limited to, the following:

a. Observation of environmental conditions; number and skill level of insulation workers; start and end time of work.

b. Verification of certification, listing or label compliance with FM P9513.

c. Verification of proper storage and handling of insulation and vapor retarder materials before, during, and after installation.

d. Inspection of vapor retarder application, including edge envelopes and mechanical fastening.

e. Inspection of mechanical fasteners; type, number, length, and spacing.

f. Coordination with other materials, cants, sleepers, and nailing strips.

g. Inspection of insulation joint orientation and laps between layers, joint width and bearing of edges of insulation on deck.

h. Installation of cutoffs and proper joining of work on subsequent days.

i. Continuation of complete roofing system installation to cover insulation installed same day.

-- End of Section --

SECTION 07240

EXTERIOR AND INTERIOR FINISH SYSTEM

PART 1 GENERAL

1.1 REFERENCES

The publications listed below form a part of this specification to the extent referenced. The publications are referred to in the text by basic designation only.

AMERICAN SOCIETY FOR TESTING AND MATERIALS (ASTM)

ASTM B 117	(1995) Operating Salt Spray (Fog) Testing Apparatus
ASTM C 67	(1996) Sampling and Testing Brick and Structural Clay Tile
ASTM C 920	(1995) Elastomeric Joint Sealants
ASTM C 1149	(1990) Self-Supported Spray Applied Cellulosic Thermal/Acoustical Insulation, or Both
ASTM D 968	(1993) Abrasion Resistance of Organic Coatings by Falling Abrasive
ASTM E 84	(1996) Surface Burning Characteristics of Building Materials
ASTM E 96	(1995) Water Vapor Transmission of Materials
ASTM G 23	(1996) Operating Light-Exposure Apparatus (Carbon-Arc Type) With and Without Water for Exposure of Nonmetallic Materials
ASTM G 53	(1996) Operating Light- and Water-Exposure Apparatus (Fluorescent UV-Condensation Type) For Exposure of Nonmetallic Materials

EIFS INDUSTRY MEMBERS ASSOCIATION (EIMA)

EIMA TM 101.86	(1995; Rev Aug 1995) Resistance of Exterior Insulation Finish Systems (EIFS), Class PB to The Effects of Rapid Deformation (Impact

1.2 DESCRIPTION

The exterior and interior finish system shall be a job-fabricated exterior and interior wall covering consisting of reinforcing fabric, base coat, finish coat, and accessories. The system shall be the standard product of a manufacturer regularly engaged in furnishing exterior and interior finish systems and shall be installed by an applicator approved by the system manufacturer. System shall be polymer base, Class PB

1.3 PERFORMANCE REQUIREMENTS

1.3.1 Test Specimens

Unless otherwise noted, the test specimens shall consist of reinforcement, base coat and finish coat applied in accordance with the manufacturer's printed recommendations to an insulation board common to the system. These test specimens shall be suitably sized for the apparatus used and be allowed to cure for a minimum of 28 days prior to testing.

1.3.2 Flame Spread

Flame spread test samples consist of base coat, fabric and finish coat, mounted on a non-combustible substrate. When tested in accordance with ASTM E 84, the samples shall have a flame spread rating of 25 or less.

1.3.3 Impact Test

The exterior and interior finish system shall have been tested in accordance with EIMA TM 101.86 using a specimen consisting of cured finish system over exterior gypsum sheathing board with base coat and reinforcing fabric in a complete assembly typical of the project application. Specimen shall withstand an impact of 30 inch-pounds.

1.4 SUBMITTALS

Government approval is required for submittals with a "GA" designation; submittals having an "FIO" designation are for information only. The following shall be submitted in accordance with Section 01330 SUBMITTAL PROCEDURES:

SD-06 Instructions

Exterior and Interior Finish System; FIO.

Two copies of manufacturer's standard printed instructions for installation of the system. Instructions shall include manufacturer's recommended details for corner treatment, jambs, sills, openings, joints and other special applications.

SD-08 Statements

Manufacturer's Approval and License; FIO.

Statement from manufacturer attesting that the applicator is approved and

licensed to install the system.

SD-09 Reports

Exterior and Interior Finish System; FIO.

Test Reports indicating that the system complies with the specified performance tests. Tests shall be by an approved, independent testing laboratory.

SD-14 Samples

Exterior and Interior Finish System; GA.

Two samples of each exterior and interior finish system. Each sample shall be one foot square, minimum, and shall be identical to the proposed installation in thickness, color, texture, and workmanship.

1.5 DELIVERY AND STORAGE

Materials shall be delivered to the jobsite in their original unopened packages, clearly marked with the manufacturer's name, brand name, and description of contents. Storage shall be in accordance with the manufacturer's recommendations in a clean, dry, well-ventilated area. Stored materials shall be protected from sunlight, and kept away from excessive heat. Coating materials which would be damaged by freezing shall be kept at a temperature not less than 40 degrees F.

PART 2 PRODUCTS

2.1 ADHESIVE

Adhesive shall be the manufacturer's standard product, including primer as required, and shall be compatible with the substrate to which the system is applied.

2.2 BASE COAT

Base coat shall be the manufacturer's standard product and shall be compatible with the finish coat.

2.3 REINFORCING FABRIC

Reinforcing fabric shall be balanced, open weave, glass fiber fabric made from twisted multi-end strands specifically treated for compatibility with the other materials of the system.

2.4 MECHANICAL ANCHORS

Mechanical anchors shall be as recommended by the system manufacturer.

2.5 FINISH COATING

Finish coating shall be manufacturer's standard product, uniform in color

and conforming to the following requirements. Specimens for tests shall have been cured for a minimum of 28 days.

TEST	RESULTS	METHOD
Abrasion Resistance	528 quarts of sand-slight - smoothing - no loss of film integrity.	ASTM D 968
Accelerated weathering Light and water exposure	2000 hours. No deterioration	ASTM G 23 or ASTM G 53
Mildew-fungus resistance	Expose for 28 days at 95 percent RH, 90 degrees F temperature. No growth of mildew or fungus.	ASTM C 1149
Salt spray resistance	Withstand 300 hours - No deleterious effects.	ASTM B 117
Water vapor	Not more than 18 grains an hour per square foot.	ASTM E 96
Absorption-freeze (Pre-weighed 4" by 8" specimens; 1" insulation, faced with finish coat cured and stored in air; tested with edges and back open).	After 50 cycles - Total weight gain of not more than 6.2 grams. No checking, splitting, or cracking.	ASTM C 67 50 Cycles: 20 hrs. at -9 degrees C; 4-hr. thaw in water

2.6 SEALANT

Sealant shall meet requirements of ASTM C 920, Class 25, and shall be compatible with the finish system. Type, Grade, and Use shall be as recommended by both the sealant manufacturer and the system manufacturer. When required, primer, bond breaker and backstop shall be non-staining, and as recommended by the sealant manufacturer and the system manufacturer.

2.7 ACCESSORIES

Accessories shall conform to the recommendations of the system manufacturer and shall include trim, edging, anchors, sealant and filler rod required for proper installation of the system.

PART 3 EXECUTION

3.1 SURFACE PREPARATION

Surface shall be free of oil, loose materials or protrusions which will interfere with the system installation.

3.2 ENVIRONMENTAL CONDITION

Unless a higher temperature is required by the system manufacturer, the ambient air temperature shall be 40 degrees F or greater and rising at the time of installation of the system and shall be predicted to remain at 40 degrees F or greater for at least 24 hours after installation.

3.3 GYPSUM SHEATHING BOARD

Gypsum sheathing board is installed as work of Section 09250, GYPSUM WALLBOARD.

3.4 REINFORCING FABRIC

Reinforcing glass fabric shall be installed in accordance with the manufacturer's instructions.

3.5 ADHESIVE SYSTEM

Primer (if required by the manufacturer) and adhesive shall be prepared and applied with a stainless steel trowel to substrate in accordance with the manufacturer's instructions. The pattern of the reinforcing fabric shall not be visible. Adhesive shall be used without fasteners only with Class PB system and when recommended by the manufacturer.

3.6 BASE COAT

Base coat shall be mixed in accordance with the manufacturer's instructions and applied to wall surfaces, trowelling the material into the reinforcing fabric in a tight coat and doubling back to provide complete coverage of the reinforcing fabric, panel joints and fasteners. Base coat may be used to level out surface areas when permitted by the manufacturer.

3.7 FINISH COATING

Finish coating shall be applied and leveled in one operation. Final texture shall be obtained by trowels, floats, or by spray application as necessary to achieve the required finish. Finish surfaces shall be plane, with no deviation greater than 1/4 inch when tested with a 10 foot straightedge.

3.8 SEALANT

Edges of the exterior insulation and finish system shall be sealed at openings as recommended by the system manufacturer.

-- End of Section --

SECTION 07413

METAL SIDING

PART 1 GENERAL

1.1 REFERENCES

The publications listed below form a part of this specification to the extent referenced. The publications are referred to in the text by basic designation only.

ALUMINUM ASSOCIATION (AA)

AA-02	(1994) Aluminum Design Manual: Specifications and Guidelines for Aluminum Structures

AMERICAN IRON AND STEEL INSTITUTE (AISI)

AISI-01	(1986; Addenda 1989) Cold-Formed Steel Design Manual

AMERICAN SOCIETY FOR TESTING AND MATERIALS (ASTM)

ASTM B 117	(1994) Operating Salt Spray (Fog) Testing Apparatus
ASTM D 522	(1993a) Mandrel Bend Test of Attached Organic Coatings
ASTM D 714	(1987; R 1994) Evaluating Degree of Blistering of Paints
ASTM D 968	(1993) Abrasion Resistance of Organic Coatings by Falling Abrasive
ASTM D 2244	(1993) Calculation of Color Differences from Instrumentally Measured Color Coordinates
ASTM D 2247	(1994) Testing Water Resistance of Coatings in 100% Relative Humidity
ASTM D 2794	(1993) Resistance of Organic Coatings to the Effects of Rapid Deformation (Impact)
ASTM D 3359	(1995) Measuring Adhesion by Tape Test
ASTM D 4214	(1989) Evaluating the Degree of Chalking of Exterior Paint Films

ASTM D 4587	(1991) Conducting Tests on Paint and Related Coatings and Materials Using a Fluorescent UV-Condensation Light- and Water- Exposure Apparatus
ASTM E 84	(1995a) Surface Burning Characteristics of Building Material

1.2 GENERAL REQUIREMENTS

1.2.1 Engineering Design, Performance Requirements, and Wind Loads

Secondary members and connections not shown on the drawings shall be designed by the Contractor. Siding panels and accessories shall be the products of the same manufacturer. Steel siding design shall be in accordance with AISI-01. Aluminum siding design shall be in accordance with AA-02.

1.2.1.1 Fire Resistance:

When fire resistance ratings are indicated or required by authorities having jurisdiction, provide materials and assemblies which have been tested in compliance with ASTM E 119.

1.2.1.2 Thermal Movement:

Provide systems and connections which allow for thermal movement resulting from ambient temperature range of 120 deg. F.

1.2.1.3 Structural Performance:

Design and engineer complete siding system to withstand the following:

1. Design Loads: Wall panel, soffit, and fascia systems shall safely support live and dead loads prescribed by codes.
2. Design Windloads: Design and engineer wall panel, soffit and fascia systems to withstand positive and negative wind loads prescribed by code, but not less than 64 psf suction or 27 psf pressure.
3. Permanent Deformation in any Member: Not to exceed 0.2% (L/500).
4. Deflection in Each Member: Not to exceed L/300 nor 0.50 in. at design wind suction or pressure load.
5. Seismic: Wall panel, soffit, and fascia systems shall meet the seismic requirements prescribed by code.

1.2.1.4 Field Leakage Test:

Contracting Officer may employ an independent testing agency to make in-place field tests for water leakage at wall panels. Test will generally include a prolonged water spray test similar to AAMA 501.3. Any uncontrolled leakage of water will be considered a failure.

1. Make watertight areas that are leaking as defined through testing.

Modify installation and techniques to eliminate any further leaking.

2. At no additional cost to Owner, provide retesting and remedial work necessary because of failures.

1.2.2 Architectural Considerations

Panels profile shall be as shown on the drawings.

1.3 SUBMITTALS

Government approval is required for submittals with a "GA" designation; submittals having an "FIO" designation are for information only. The following shall be submitted in accordance with Section 01330 SUBMITTAL PROCEDURES:

SD-04 Drawings

Siding; GA.

Drawings consisting of catalog cuts, design and erection drawings, shop coating and finishing specifications, and other data as necessary to clearly describe design, materials, sizes, layouts, construction details, fasteners, and erection. Drawings shall be accompanied by engineering design calculations for the siding panels, stamped and sealed by a registered structural engineer licensed in the State of New York.

SD-13 Certificates

Siding; FIO. Installation; FIO. Accessories; FIO.

Certificates attesting that the panels and accessories conform to the requirements specified. Certified laboratory test reports showing that the sheets to be furnished are produced under a continuing quality control program and that a representative sample consisting of not less than 5 pieces has been tested and has met the quality standards specified for factory color finish. Mill certification for structural bolts, siding, and wall liner panels.

Insulation; GA.

Certificate attesting that the insulation furnished for the project contains recovered material, and showing an estimated percent of such recovered material.

SD-14 Samples

Accessories; GA.

One sample of each type of flashing, trim, closure, cap and similar items. Size shall be sufficient to show construction and configuration.

Siding; GA.

One piece of each type and finish (exterior and interior) to be used, 9 inches long, full width.

Fasteners; FIO.

Two samples of each type to be used with statement regarding intended use. If so requested, random samples of bolts, nuts, and washers as delivered to the jobsite shall be taken in the presence of the Contracting Officer and provided to the Contracting Officer for testing to establish compliance with specified requirements.

1.4 DELIVERY AND STORAGE

Materials shall be delivered to the site in a dry and undamaged condition and stored out of contact with the ground. Materials shall be covered with weathertight coverings and kept dry. Storage accommodations for metal siding shall provide good air circulation and protection from surface staining.

1.5 WARRANTIES

The Contractor shall provide a weather tight warranty for the metal siding for a period of 20 years to include siding panel assembly, 10 years against the wear of color finish, and 10 years against the corrosion of fasteners caused by ordinary wear and tear by the elements. The warranties shall start upon final acceptance of the work or the date the Government takes possession, whichever is earlier.

PART 2 PRODUCTS

2.1 SIDING

There are two types of metal siding required for this Project: a factory insulated aluminum panel, and a composite, non-insulated aluminum panel, as indicated on the Drawings. Panels shall be aluminum and shall have a factory color finish.

2.1.1 Aluminum Composite Panels

Metal panels shall be 0.236 in. thick composite panels, consisting of two sheets of aluminum sandwiching a core of extruded thermoplastic material formed in a continuous process with no glues or adhesives between dissimilar materials. Aluminum face sheets shall be 0.02 in. thick, of 5205 alloy. Panel weight shall be 1.49 lb. per sq. ft.

1. Panels shall be flat and free of "oil-canning", warp, buckle, or other distortion. Maximum allowable bow shall be 0.8% of panel dimension in width and length.
2. Panels shall be manufactured to dimensions established by field measurements only, to assure precise fitting.
3. Panel lines and breaks shall be sharp and true.
4. Edges of panels shall be returned to fit and attach to continuous anchor angles and channels as indicated.

5. Edges of soffits shall be grooved to fit continuous tongues formed into the aluminum retaining assemblies.
6. Provide true radius units where indicated. Vertical legs of radius units shall be roll-formed to the proper radius. Horizontal legs shall be cut to the proper radius prior to connection the to units together. Segmented units are not acceptable. Do not expose any raw edges.
7. All corner units shall be prefabricated.
8. Provide custom fabricated coping units where indicated.

Panel retainer shall be continuous aluminum angles and channels, as indicated. Panel retainer assemblies at soffits shall be of two-piece construction, snapped-together for mullions and used alone for edge conditions, of extruded aluminum, 6063-T5 alloy, of sizes and shapes as indicated. Edges shall finish exactly flush with aluminum panel surfaces, and shall be fitted with continuous tongues to secure panels into proper position.

Miscellaneous clips, anchors, and other fastening devices shall be noncorrosive type suitable and adequate for each purpose intended, as recommended by panel manufacturer.

2.1.2 Factory Insulated Panels

Insulated wall panels shall be factory-fabricated units with insulating core between metal face sheets, securely fastened together and uniformly separated with rigid spacers; facing of aluminum of composition and gauge specified for siding; and constructed to eliminate condensation on interior of the panel. Panels shall have a factory color finish. Insulation shall be compatible with adjoining materials; nonrunning and nonsettling; capable of retaining its R-value for the life of the metal facing sheets; and unaffected by extremes of temperature and humidity. The assembly shall have a flame spread rating not higher than 25, and smoke developed rating not higher than 50 when tested in accordance with ASTM E 84. The insulation shall remain odorless, free from mold, and not become a source of food and shelter for insects. Panels shall be not less than 8 inches wide and shall be in one piece for unbroken wall heights.

2.2 FINISH

Comply with NAAMM "Metal Finishes Manual" for recommendations relative to applying and designating finishes.

Finish designations prefixed by AA conform to the system established by the Aluminum Association for designating aluminum finishes.

Finish metal panels to match other aluminum components on the project, including curtain wall framing; aluminum windows; and exterior aluminum louvers.

High-Performance Organic Coating Finish: AA-C12C42R1x (Chemical Finish: cleaned with inhibited chemicals; Chemical Finish: acid chromate-fluoride-phosphate conversion coating; Organic Coating: as specified below). Prepare, pretreat, and apply coating to exposed metal

surfaces to comply with coating and resin manufacturer's instructions.

1. Fluoropolymer 3-Coat Coating System: Provide 3-coat, thermocured, metallic finish system composed of specially formulated inhibitive primer, fluoropolymer color coat, and clear fluoropolymer topcoat, with both color coat and clear topcoat containing not less than 70 percent polyvinylidene fluoride resin by weight; complying with AAMA 605.2. Coating shall be equal to PPG Duranar XL Plus.

2. Color and Gloss: As indicated in Section 09915, COLOR SCHEDULE.

2.2.1 Salt Spray Test

A sample of the sheets shall withstand a salt spray test for a minimum of 3000 hours in accordance with ASTM B 117, including the scribe requirement in the test. Immediately upon removal of the panel from the test, the coating shall receive a rating of not less than 8F, few no. 8 blisters, as determined by ASTM D 714.

2.2.2 Formability Test

When subjected to testing in accordance with ASTM D 522 Method B, 1/8 inch diameter mandrel, the coating film shall show no evidence of fracturing to the naked eye.

2.2.3 Accelerated Weathering, Chalking Resistance and Color Change

A sample of the sheets shall be tested in accordance with ASTM D 4587. The coating shall withstand the weathering test without cracking, peeling, blistering, loss of adhesion of the protective coating, or corrosion of the base metal. Protective coating that can be readily removed from the base metal with tape in accordance with ASTM D 3359, Test Method B, shall be considered as an area indicating loss of adhesion. Following the accelerated weathering test, the coating shall have a chalk rating not less than No. 8 in accordance with ASTM D 4214 test procedures, and the color change shall not exceed 5 CIE or Hunter Lab color difference (delta E) units in accordance with ASTM D 2244. For sheets required to have a low gloss finish, the chalk rating shall be not less than No. 6 and the color difference shall be not greater than 7 units.

2.2.4 Humidity Test

When subjected to a humidity cabinet test in accordance with ASTM D 2247 for 3000 hours, a scored panel shall show no signs of blistering, cracking, creepage or corrosion.

2.2.5 Impact Resistance

Factory-painted sheet shall withstand direct and reverse impact in accordance with ASTM D 2794 0.500 inch diameter hemispherical head indenter, equal to 1.5 times the metal thickness in mils, expressed in inch-pounds, with no loss of adhesion.

2.2.6 Abrasion Resistance Test

When subjected to the falling sand test in accordance with ASTM D 968, Method A, the coating system shall withstand a minimum of 170 - 220 liters of sand before the appearance of the base metal. The term "appearance of base metal" refers to the metallic coating on aluminum base metal.

2.3 ACCESSORIES

Flashing, trim, metal closure strips, caps, and similar metal accessories shall be the manufacturer's standard products. Exposed metal accessories shall be finished to match the panels furnished. Molded closure strips shall be bituminous-saturated fiber, closed-cell or solid-cell synthetic rubber or neoprene, or polyvinyl chloride premolded to match configuration of the panels and shall not absorb or retain water.

2.4 FASTENERS

Fasteners for steel panels shall be zinc-coated steel, aluminum, corrosion resisting steel, or nylon capped steel, type and size specified below or as otherwise approved for the applicable requirements. Fasteners for aluminum panels shall be aluminum or corrosion resisting steel. Fasteners for attaching wall panels to supports shall provide both tensile and shear strength of not less than 750 pounds per fastener. Fasteners for accessories shall be the manufacturer's standard. Exposed wall fasteners shall be color finished or provided with plastic color caps to match the panels. Non-penetrating fastener system for wall panels using concealed clips shall be manufacturer's standard for the system provided.

2.4.1 Screws

Screws shall be as recommended by the manufacturer.

2.4.2 End-Welded Studs

Automatic end-welded studs shall be shouldered type with a shank diameter of not less than 3/16 inch and cap or nut for holding panels against the shoulder.

2.4.3 Explosive Actuated Fasteners

Fasteners for use with explosive actuated tools shall have a shank of not less than 0.145 inch with a shank length of not less than 1/2 inch for fastening panels to steel and not less than 1 inch for fastening panels to concrete.

2.4.4 Blind Rivets

Blind rivets shall be aluminum with 3/16 inch nominal diameter shank or stainless steel with 1/8 inch nominal diameter shank. Rivets shall be threaded stem type if used for other than the fastening of trim. Rivets with hollow stems shall have closed ends.

2.4.5 Bolts

Bolts shall be not less than 1/4 inch diameter, shouldered or plain shank as required, with proper nuts.

2.5 SEALANT

Sealant shall be an elastomeric type containing no oil or asphalt. Exposed sealant shall be colored to match selection by Contracting Officer.

2.6 GASKETS AND INSULATING COMPOUNDS

Gaskets and insulating compounds shall be nonabsorptive and suitable for insulating contact points of incompatible materials. Insulating compounds shall be non-running after drying.

PART 3 EXECUTION

3.1 INSTALLATION

Installation shall be in accordance with the manufacturer's erection instructions and drawings. Dissimilar materials which are not compatible when contacting each other shall be insulated from each other by means of gaskets or insulating compounds. Improper or mislocated drill holes shall be plugged with an oversize screw fastener and gasketed washer; however, panels with an excess of such holes or with such holes in critical locations shall not be used. Exposed surfaces and edges shall be kept clean and free from sealant, metal cuttings, hazardous burrs, and other foreign material. Stained, discolored, or damaged sheets shall be removed from the site.

3.1.1 Siding and Accessories

Siding shall be applied with the longitudinal configurations in the vertical position. Accessories shall be fastened into framing members, except as otherwise approved. Closure strips shall be provided as indicated and where necessary to provide weathertight construction.

3.1.1.1 Concealed Fastener Wall Panels

Panels shall be fastened to framing members with concealed fastening clips or other concealed devices standard with the manufacturer. Spacing of fastening clips and fasteners shall be in accordance with the manufacturer's written instructions. Spacing of fasteners and anchor clips along the panel interlocking ribs shall not exceed 12 incheson center except when otherwise approved. Fasteners shall not puncture metal sheets except as approved for flashing, closures, and trim; exposed fasteners shall be installed in straight lines. Interlocking ribs shall be sealed with factory-applied sealant. Joints at accessories shall be sealed.

-- End of Section --

SECTION 07551

MODIFIED BITUMEN ROOFING

PART 1 GENERAL

1.1 REFERENCES

The publications listed below form a part of this specification to the extent referenced. The publications are referred to in the text by basic designation only.

AMERICAN SOCIETY FOR TESTING AND MATERIALS (ASTM)

ASTM C 208	(1995) Cellulosic Fiber Insulating Board
ASTM C 1153	(1997) Location of Wet Insulation in Roofing Systems Using Infrared Imaging
ASTM D 41	(1994) Asphalt Primer Used in Roofing, Dampproofing, and Waterproofing
ASTM D 312	(1995a) Asphalt Used in Roofing
ASTM D 4586	(1993) Asphalt Roof Cement, Asbestos Free

FACTORY MUTUAL ENGINEERING AND RESEARCH (FM)

FM P7825c	(1998) Approval Guide Building Materials

UNDERWRITERS LABORATORIES (UL)

UL Bld Mat Dir	(1998) Building Materials Directory
UL 790	(1997) Tests for Fire Resistance of Roof Covering Material

1.2 SYSTEM DESCRIPTION

The modified bitumen roofing system shall consist of a manufacturer's standard, prefabricated, reinforced polymer-modified bitumen membrane, with base sheet, and insulation as specified and indicated. System shall be a minimum 4-ply system. The manufacturer shall have a minimum of 5 years experience in manufacturing of the proposed modified bitumen sheet roofing for similar applications.

1.3 SUBMITTALS

Government approval is required for submittals with a "GA" designation; submittals having an "FIO" designation are for information only. The following shall be submitted in accordance with Section 01330 SUBMITTAL

PROCEDURES:

SD-06 Instructions

Materials and Installation; FIO.

Manufacturer's instructions, including membrane description and performance data, detailed procedure for installation, and safety precautions, prior to the start of roofing work.

SD-13 Certificates

Qualifications; FIO.

Evidence that the manufacturer has a minimum of 5 years experience manufacturing modified bitumen roofing. The roofing system applicator shall be approved by the modified bitumen roofing manufacturer, and shall have a minimum of 3 years experience as an approved applicator. A list of installations using the same products and applicator as proposed shall be included.

Materials; FIO.

Certificates of compliance for felts, bitumens, and membrane sheet.

SD-18 Records

Bills of Lading; FIO.
Bills of lading shall indicate the flash point and equiviscous temperature (EVT) and this information shall be shown on labels for each unit (or plug) of asphalt.

1.4 STORAGE OF MATERIALS

Felts and roofing sheets shall be kept dry before, during, and after delivery to the site. Felts and roofing sheets shall be stored on end one level high, in an enclosed building or trailer and on platforms, off the deck or floor. Felts and sheets shall be maintained at a temperature above 50 degrees F for 24 hours immediately before laying.

1.5 COORDINATION REQUIREMENTS

The work shall be coordinated with other trades to ensure that components are available when they are to be secured or stripped into the roofing system.

1.5.1 Insulation Application

Application of roofing shall immediately follow application of insulation as a continuous operation.

1.5.2 Flashing

Modified bituminous sheet shall be used for flashings where the roof deck

abuts angles, vertical surfaces, edge metal, and penetrations, unless otherwise specified or indicated. Flashing shall be installed as the work progresses.

1.5.3 Sheet Metalwork

Sheet metalwork specified in Section 07625 COPPER SHEET METAL FLASHING, GENERAL shall be coordinated with roofing operations.

1.6 ENVIRONMENTAL CONDITIONS

Air temperature shall be above 40 degrees F and there shall be no visible ice, frost, or moisture on the roof deck at the time roofing is installed.

1.7 FLAME HEATED EQUIPMENT

Flame heated kettles shall not be placed on the roof. Torch application shall be approved by the membrane manufacturer for the specific modified bitumen. Open flame equipment shall not be left unattended while ignited.

1.8 ELECTRIC-HEATED EQUIPMENT

Adequate electrical service shall be provided as required by the manufacturer of the equipment, to insure proper application of the roofing materials.

1.9 FIRE AND WIND UPLIFT REQUIREMENTS

The complete roof system shall have a UL 790, Class A classification, be listed as "fire classified" in UL Bld Mat Dir, and bear the UL label or be listed as a Class I Roof Deck in FM P7825c. Roofing system over steel deck shall be rated Class I- 90 in accordance with FM P7825c. Ratings from other independent laboratories may be substituted provided that the tests, requirements and ratings are documented to be equivalent, to the satisfaction of the Contracting Officer.

1.10 WARRANTY

Manufacturer's standard warranty for the roofing system shall be provided for not less than 20 years from acceptance of the work. Warranty shall state that manufacturer shall repair or replace defective materials if the roofing system leaks or allows the insulation beneath the membrane to become wet during the period of the warranty.

Provide roof system flashings, terminations, and the like as required to achieve the required warranty. See Drawings for additional requirements.

PART 2 PRODUCTS

2.1 GENERAL

Provide minimum 4-ply, modified bitumen roofing systems.

Drawings and Specifications are based upon TAMKO 108FR Awaplan Premium FR

systems. Provide this system or approved equal.

2.2 PRIMER

Primer shall conform to ASTM D 41.

2.3 ASPHALT

Asphalt shall conform to ASTM D 312, Type III for slopes up to 25 percent (1/4 vertical/horizontal) and Type IV for slopes up to 50 percent (1/2 vertical/horizontal).

2.4 BITUMINOUS CEMENT

Bituminous cement shall conform to ASTM D 4586.

2.5 CANTS AND WOOD NAILERS

Treated wood cants and wood nailers shall be of water-borne preservative-treated material as specified in Section 06100 ROUGH CARPENTRY. Cants shall be made from treated wood or treated fiberboard not less than 3-1/2 inches high and cut to reduce change in direction of the membrane to 45 degrees or less. Fiberboard shall conform to ASTM C 208, treated with sizing, wax or bituminous impregnation. When membrane or flashing is to be torch applied, cants shall be fire resistant.

2.6 BASE SHEET

Provide high-performance fiberglass ply sheets constructed with fiberglass mat coated with weathering-grade asphalt. Base sheets shall conform to ASTM D 2178, Type IV, equal to TAMKO "Tam-Ply IV".

2.7 MODIFIED BITUMEN SHEET

Provide TAMKO Awaplan Premium FR polyester reinforced SBS modified membrane, or approved equal.

Modified bitumen sheet shall be a bitumen modified by styrene butadiene styrene (SBS). Sheets shall be uniform in thickness of 155 mils, and uniform appearance, and free from blisters or tape splices. Sheets shall not stick to the roll or stack, and shall be suitable for joining along the entire length by the procedure recommended by the manufacturer. Roll weight shall be 100 lbs. Sheet shall be reinforced with fiber made from non-woven spunbound polyester mat 250 g/m2, and shall meet the following requirements:

1.	Tensile Strength:	MD=181 LBF/IN CSD=135 LBF/IN
2.	Elongation:	MD=53% CD=59%
3.	Tear Strength:	MD=185 LBS. CD=139 LBS.

3. Low Tmp Flex: MD=-15 Deg. F.
CD=-15 Deg. F.

2.8 NAILS AND FASTENERS

Nails and fasteners shall be an approved type recommended by the roofing felt or membrane manufacturer.

2.9 SURFACING MATERIAL

Surfacing shall be factory applied granules requiring no further coating.

2.10 INSULATION

Insulation shall be compatible with the membrane, as recommended by the membrane manufacturer's printed instructions, and as specified in Section 07220 ROOF INSULATION.

2.11 ROOF PAVERS

Roof Pavers: Heavyweight, factory-cast, square-edged, concrete units; specially manufactured for use as roof ballast, and as follows:

1. Weight: 18 lb/sq. ft., minimum.
2. Compressive Strength: 6000 psi (41 MPa), minimum.
3. Thickness: 2 inches.
4. Size: 24 by 24 inches.
5. Back: Plain.
6. Color and Texture: Provide Contracting Officer's selections from manufacturer's full range of colors and textures for materials and products of type indicated.

PART 3 EXECUTION

3.1 PREPARATION REQUIREMENTS

The substrate construction of any bay or section of the building shall be completed before roofing work is begun thereon. Roofing applied directly on concrete shall not be scheduled until hot bitumen sticks tightly and does not froth or bubble when applied to the concrete. Vents and other items penetrating the roof shall be secured in position and properly prepared for flashing. Nailers, curbs and other items attached to roof surface shall be in place before roofing is begun.

3.2 INSTALLATION OF CANTS

Cants shall be installed in the angles formed between the roof and walls or other vertical surfaces. Cants shall be laid in a solid coat of bituminous cement just prior to laying the base sheet or membrane. Cants shall be continuous, and shall be installed in lengths as long as practicable.

3.3 CONDITION OF SURFACES

Surfaces shall be inspected and approved immediately prior to application of roofing and flashings. The roofing and flashings shall be applied to a smooth and firm surface free from ice, frost, visible moisture, dirt, projections, and foreign materials. Prior to application of primer on precast concrete decks, joints shall be covered with a 4 inch strip of roofing felt, embedded in and coated with bituminous cement. Modified bitumen membrane shall be isolated from coal tar pitch.

3.4 MECHANICAL APPLICATION DEVICES

Mechanical application devices shall be mounted on pneumatic-tired wheels, and shall be designed and maintained to operate without damaging the insulation, roofing membrane, or structural components.

3.5 PRIMING

Concrete, masonry and metal surfaces to receive bitumen shall be uniformly coated with primer at a rate of not less than 1 gallon per square and allowed to dry.

3.6 HEATING OF BITUMEN

Asphalt shall not be heated higher than 75 degrees F above the EVT or 50 degrees F below the flash point or 525 degrees F (maximum) whichever is lower. EVT and flash point temperatures of asphalt in the kettle shall be conspicuously posted on the kettle. Heating kettle shall be provided with automatic thermostatic control and an accurate thermometer. Kettle operators shall be in attendance at all times during the heating to ensure that the maximum temperature specified is not exceeded. An asphalt tanker shall be treated as a kettle.

3.7 BITUMEN APPLICATION

Asphalt shall be applied within 25 degrees F below or above the EVT, or 400 degrees F, whichever is higher. Application temperatures shall be measured at the mop bucket or mechanical applicator. Bitumen at a temperature below the recommended temperature shall be returned to the kettle.

3.8 APPLICATIONS OF BASE SHEET

Base sheets shall be applied in 3 plies, shingle fashion, in a continuous operation, with side laps in accordance with manufacturer's printed instructions. End laps shall be not less than 6 inches and staggered a minimum of 24 inches. Base sheets shall be applied at right angles to the slope (except on curved or steep deck) and laps shall face down the slope. Base sheets shall be applied in hot mopping of not less than 20 pounds nor more than 25 pounds of asphalt per square and shall be embedded in the hot asphalt with a squeegee or broom to eliminate air pockets and assure complete adhesion. Operator shall avoid heavy application of squeegees to glass-fiber sheets.

3.9 MODIFIED BITUMEN MEMBRANE APPLICATION

Membrane shall be one ply,as recommended by the membrane manufacturer. Membrane shall be fully adhered to the underlying surface. Sheet edges shall lie flat, with no fishmouths or wrinkles. Installation shall begin at the low point of the roof and progress to the high point with each sheet installed shingle fashion. Each sheet shall be unrolled to provide 4 inch side laps and 6 inch end laps. End laps shall be staggered not less than 24 inches. Laps shall not coincide with laps of base layers except at lines of permanent termination.

3.10 TERMINATIONS AT PERIMETERS

The modified bitumen membrane shall extend up abutting surface at least 4 inches or 3 inches minimum above the top of the cant, or to flashing lines required.

3.11 MECHANICAL FASTENING

Nails and fasteners for securing base or membrane sheet to wood nailers or deck shall be flush driven through flat metal disks of not less than 1 inch diameter. Metal disks may be omitted where heads of fasteners are equivalent in size to the 1 inch diameter disks. Screw fasteners with disks as specified by the membrane manufacturer shall be used on concrete or metal deck. Nails and fasteners shall be spaced to meet the wind uplift requirement and within the tolerances specified by the manufacturer. Penetration of nails and fasteners will not be permitted through the exposed surface of membrane.

3.12 PROTECTION OF APPLIED ROOFING

At end of day's work or whenever precipitation is imminent, the terminated edge of the roofing shall be sealed with two full width strips of roofing felt set in and coated with bituminous cement or hot mopped asphalt. One half-width of strips shall be extended up and over the finished roofing and the other half-width extended out and onto the bare roof deck or existing membrane. Sealing strips shall be removed before continuing installation of roofing. To facilitate sealing, termination edges may be straightened with pieces of insulation board which shall be removed when work is resumed.

3.13 FLASHINGS

Flashings shall be provided over cants, in the angles formed at walls and other vertical surfaces, and where required on the back-side of parapet walls where shown on Drawings to make the work watertight. Modified bitumen flashings shall be used, except where metal flashings are specified in other sections of the specifications.

3.14 INFRARED INSPECTION

At acceptance of roof, 6 months and 11 months after completion of the roofing system, the Contractor shall inspect the roof surface using infrared (IR) scanning as specified in ASTM C 1153, in presence of Contracting Officer, with written report of findings. Where the IR inspection indicates wet insulation, moisture content of the insulation

shall be determined at sample cuts (including a sample from a suspected dry area). Wet insulation shall be replaced where the moisture content by weight exceeds the following values: wood fiber: 30 percent; glass fiber or perlite: 25 percent; polyisocyanurate: 260 percent. Wet insulation, overlying roofing and sample-cut areas shall be replaced as directed.

3.15 INSPECTION

The Contractor shall establish and maintain an inspection procedure to assure compliance of the installed roofing with the contract requirements. Any work found not to be in compliance with the contract shall be promptly removed and replaced or corrected in an approved manner. Inspection shall include, but not be limited to, the following:

a. Observation of environmental conditions; number and skill level of roofing workers; start and end time of various tasks; condition of substrate.

b. Verification of compliance of materials before, during, and after installation.

c. Inspection of condition of equipment and accuracy of thermometers and metering devices.

d. Inspection of flashings, cants and curbs.

e. Inspection of membrane placement, including edge envelopes, widths of starter sheets, laps, proper use of squeegee, and mechanical fastening.

f. Inspection of application of bitumen, aggregate, and walkways.

g. Inspection of embedment of aggregate for required weight and coverage.

h. Cutout sampling and analysis as directed.

-- End of Section --

SECTION 07610

COPPER ROOF SYSTEM

PART 1 GENERAL

1.1 REFERENCES

The publications listed below form a part of this specification to the extent referenced. The publications are referred to in the text by basic designation only.

AMERICAN SOCIETY OF CIVIL ENGINEERS (ASCE)

ASCE 7	(1994) Minimum Design Loads for Buildings and Other Structures

AMERICAN SOCIETY FOR TESTING AND MATERIALS (ASTM)

ASTM B 32	(1996) Solder Metal
ASTM B 370	(1992) Copper Sheet and Strip for Building Construction
ASTM E 72	(1995) Conducting Strength Tests of Panels for Building Construction

COPPER DEVELOPMENT ASSOCIATION (CDA)

CDA-01	(1992) Handbook: Copper in Architecture

1.2 DESIGN REQUIREMENTS

Copper shall be formed to provide proper installation of elastomeric sealants. Expansion joints shall be formed of intermeshing hooked flanges not less than 1 inch deep in accordance with CDA-01.

1.2.1 Wind Uplift Loads

The design uplift pressures for the roof system shall be computed and applied using a basic wind speed of 90 miles per hour (fastest mile), an importance factor according to Section 6 of ASCE 7. The design uplift force for each connection assembly shall be that pressure given for the area under consideration, multiplied by the tributary load area of the connection assembly, and multiplied by the appropriate factor of safety, as follows:

a. Single fastener in each connection 3.0
b. Two or more fasteners in each connection ...2.25

1.2.2 Panel and Clip Design

Panel and clip strength characteristics such as panel buckling strength, panel stiffness, side joint strength and clip/side joint shall meet requirements of ASTM E 72. The clip-to-substrate fastener selection shall incorporate a safety factor of 3.0 based on ultimate pull-out strength. Selection must consider the pry effect which the outstanding leg of clip exerts on the fastener. End-laps shall be designed for thermal movement. Concealed anchor clips shall be used.

1.2.3 Provisions for Expansion

Copper roof panels shall be free to move in response to the expansion and contraction forces resulting from a total 200 degrees F temperature range during the life of the structure.

1.3 SUBMITTALS

Government approval is required for submittals with a "GA" designation; submittals having an "FIO" designation are for information only. The following shall be submitted in accordance with Section 01330 SUBMITTAL PROCEDURES:

SD-01 Data

Sealant; FIO.

Descriptive information.

SD-04 Drawings

Copper Roof System; GA.

Design and erection drawings containing data necessary to clearly describe design, materials, sizes, layouts, seam configuration, construction details, provisions for thermal movement, line of panels, fastener sizes and spacings, sealants and installation procedures.

SD-08 Statements

Qualifications; FIO.

Qualifications of the manufacturer, installer, and field representative.

SD-09 Reports

Field Testing; FIO.

Test reports for uplift resistance of the copper roof system.

SD-13 Certificates

Copper Roof System; FIO.

Certification that materials used in the copper roof system meet specified

requirements.

SD-14 Samples

Accessories; GA.

One sample of each type of flashing, trim, closure, cap and similar items. Size shall be sufficient to show construction and configuration.

Roof Panels; GA.

One piece 9 inches long, full width.

Fasteners; GA.

Two samples of each type to be used, with statement regarding intended use. If so requested, random samples of each type of fastener, as delivered to the project site shall be taken in the presence of the Contracting Officer and provided to the Contracting Officer.

Concealed anchor clip; GA.

Two samples of each type.

1.4 QUALIFICATIONS

1.4.1 Manufacturer

Copper roof system shall be the product of a recognized copper roof system manufacturer who has been in the practice of manufacturing copper roof systems for a period of not less than 10 years and has been involved in at least 5 projects similar in size and complexity to this project.

1.4.2 Installer

The installer shall be skilled in the installation of the type of copper roof system required for this project, shall have a minimum of 10 years of experience, and shall have been involved in installing at least 3 projects that are of comparable size, scope and complexity as this project for the particular roof system furnished.

1.4.3 Manufacturer's Representative

A representative of the copper roof system manufacturer, who is familiar with the design of the roof system supplied and experienced in the erection of roof systems similar in size to the one required under this contract, shall be present at the project site during installation of the copper roof to ensure that the roof system meets the contract requirements.

1.5 DELIVERY, STORAGE AND HANDLING

Materials shall be delivered to the project site in a dry and undamaged condition and shall be stored out of contact with the ground. Materials shall be covered with weathertight coverings and kept dry. Storage

accommodations for materials shall provide good air circulation and protection from twisting, bending, abrasion, discoloration or staining.

1.6 WARRANTY

The copper roofing installation shall be warranted for a period of 20 years against blow-off and leakage arising out of or caused by ordinary wear and tear by the elements. A sign shall be permanently attached to the building at the most likely roof access point advising of the existence of the warranty. The warranty shall start upon final acceptance of the work or the date the Government takes possession, whichever is earlier. The warranty shall guarantee that the design, detailing, materials, and accessories used for roofing work are approved by the roofing manufacturer and installed in accordance with specifications, drawings and other documents approved by manufacturer prior to installation.

PART 2 PRODUCTS

2.1 ROOF PANELS

Roofing sheets shall be cold-rolled copper sheets conforming to ASTM B 370 temper designation, H00, minimum 16 ounces per square foot containing 99.9 percent copper. Copper roof panels shall be factory-fabricated in accordance with approved drawings and CDA-01 recommendations. Sections shall be formed true to shape in the longest practical lengths, accurate in size and free of distortion and defects. Exposed edges shall be hemmed on underside. Exposed copper work shall be fabricated without excessive oil-canning, buckling, and tool marks.

2.2 ACCESSORIES

Components required for a complete roofing system, including trim, clips, gutters, closure strips, and similar items shall be factory fabricated. Clip bases shall have factory punched or drilled holes for attachment. Clips used with panel width greater than 12 inches shall be made from multiple pieces with the allowance for the total thermal movement required to take place within the clip. Cleats shall be interlockable with the panels and shall be of type and size to meet design requirements. Accessories shall be fabricated of type and thickness of sheet copper complying with CDA-01.

2.3 SOLDER AND FLUX

Copper solder shall conform to ASTM B 32. Flux shall be rosin, muriatic acid neutralized with zinc or an approved soldering paste.

2.4 SLIP SHEETS

Slip sheets shall be smooth rosin-sized unsaturated building paper weighing a minimum of 6 pounds per 100 square feet. Sheets shall be attached with approved fasteners. Slip sheets shall be applied over vapor retarder, where applicable.

2.5 Self-Adhering, Polymer-Modified, Bituminous Sheet Underlayment

ASTM D 1970, minimum 40 mils (1 mm) thick. Provide primer when recommended by underlayment manufacturer.

Products: Subject to compliance with requirements, provide one of the following:

a. Vicor; Grace: W.R. Grace & Co.
b. Polyken 640 Underlayment Membrane; Polyken Technologies.
c. Weather Watch; GAF Building Materials Corporation.

2.6 BITUMINOUS COATING

Bituminous coating shall be cold-applied inert-type noncorrosive compound, nominally free of sulfur components and other deleterious impurities.

2.7 SEALANT

Sealant shall be in accordance with CDA-01 and manufacturer's recommendations.

2.8 FASTENERS

Fasteners in contact with copper shall be copper, brass or Series 300 stainless steel. Fasteners shall be capable of resisting the specified wind uplift and shall allow for movement of roof panel system. Exposed fasteners shall be copper and shall only be used at batten caps and closures.

PART 3 EXECUTION

3.1 INSTALLATION

Copper shall be separated from non-compatible metal and corrosive substrates with permanent type separators recommended by manufacturer. Roofing panels, flashings and related accessories shall be installed with approved fasteners in accordance with approved drawings and CDA-01. Roofing components shall be set true to line and shall accurately fit together to form leak-proof joints. Panels shall be folded back to form a hem on concealed side of exposed edges. Exposed surfaces shall be field-formed standing seam profile, free of buckles, waves, and tool marks. Provision shall be made for thermal expansion and contraction. Seams shall be uniform and neat with minimum of solder, welds and sealant. Fasteners and expansion provisions shall be concealed where possible in exposed work. Field-cutting of panels by torch is not permitted.

1. Standing Seams: Standing seams shall be 1-1/2 inch high, spaced 16 inches o.c., unless otherwise shown on Drawings.

3.1.1 Tolerances

Panels shall be shimmed and aligned within a tolerance of 3/8 inch in 40 feet vertically and horizontally and within 1/8 inch offset of adjoining surfaces and of vertical alignment of matching profiles.

3.1.2 Substrates

Substrates shall be clean, smooth, sound, dry, and free of defects and projections which might affect the installation. Projecting nails and other types of fasteners shall be secure and flush with substrate. Roof openings, pipes, vents, and other roof penetrations shall be securely set in place.

3.1.3 Self-Adhering, Polymer-Modified, Bituminous Sheet Underlayment

Install Self-Adhering, Polymer-Modified, Bituminous Sheet Underlayment over all substrates to receive copper roofing in accordance with manufacturer's recommendations.

3.1.4 Slip Sheets

Slip sheets shall be installed over Self-Adhering, Polymer-Modified, Bituminous Sheet Underlayment with joints overlapped a minimum of 2 inches, and shall be secured with approved fasteners.

3.2 FIELD TESTING

30 random fastener pull tests shall be conducted in areas designated by the Contracting Officer. Fasteners for structural connections shall provide tensile and shear strength of not less than 750 pounds per fastener.

3.3 CLEANING

Upon completion of copper roofing work, grease and oil films, excess sealants and handling marks shall be removed and the work shall be cleaned in accordance with manufacturer's recommendations. Copper surfaces shall be cleaned of substances that would interfere with uniform oxidation and weathering. Exposed copper surfaces shall be free of dents, creases, waves, scratch marks, and solder or weld marks.

3.4 PROTECTION

Copper roofing work shall be protected to ensure the work is without damage or deterioration. Roof panels and other components which have been damaged or have deteriorated beyond successful repair shall be replaced with new copper sheet metalwork. Storing, walking, wheeling or trucking directly on completed copper roofing work is not permitted. When required, temporary walkways, runways and platforms fabricated of smooth clean boards shall be used to avoid damage to completed copper work. Copper roofing work shall be maintained in a clean condition until final acceptance.

-- End of Section --

SECTION 07625

COPPER SHEET METAL FLASHING

PART 1 GENERAL

1.1 REFERENCES

The publications listed below form a part of this specification to the extent referenced. The publications are referred to in the text by basic designation only.

AMERICAN SOCIETY FOR TESTING AND MATERIALS (ASTM)

ASTM B 32	(1996) Solder Metal
ASTM B 152	(1994) Copper Sheet, Strip, Plate, and Rolled Bar
ASTM B 370	(1992) Copper Sheet and Strip for Building Construction
ASTM C 1136	(1995) Flexible, Low Permeance Vapor Retarders for Thermal Insulation
ASTM D 226	(1997) Asphalt-Saturated Organic Felt Used in Roofing and Waterproofing
ASTM F 547	(1977; R 1990) Definitions of Terms Relating to Nails for Use with Wood and Wood-Base Materials
ASTM D 2822	(1991) Asphalt Roof Cement

COMMERCIAL ITEM DESCRIPTIONS (CID)

CID A-A-51145	(Rev C) Flux, Soldering, Non-Electronic, Paste and Liqui

1.2 GENERAL REQUIREMENTS

Sheet metalwork shall be accomplished to form weathertight construction. Work shall be installed without waves, warps, buckles, fastening stresses or distortion and shall allow for expansion and contraction. Cutting, fitting, drilling, and other operations in connection with sheet metal required to accommodate the work of other trades shall be performed by sheet metal mechanics. Exposed edges shall be hemmed. Bottom edges of exposed vertical surfaces shall be angled to form drips. Flashing at the end of a run shall be formed into a 3-dimensional configuration to direct

water to the outside of the system. Weights and thicknesses of copper flashing shall be as specified in TABLE 1. Joints shall be installed as specified in TABLE 2. Accessories and other items essential to complete the sheet metal installation, though not specifically indicated or specified, shall be provided. Installation of sheet metal items used in conjunction with roofing shall be coordinated with roofing work to permit continuous roofing operations. Factory-fabricated components shall be packed in cartons marked with the manufacturer's name or trademark printed or embossed at frequent intervals to permit easy identification. Sheet metalwork pertaining to heating, ventilating, and air conditioning is specified in other sections.

1.3 SUBMITTALS

Government approval is required for submittals with a "GA" designation; submittals having an "FIO" designation are for information only. The following shall be submitted in accordance with Section 01330 SUBMITTAL PROCEDURES:

SD-04 Drawings

Sheet Metal; GA.

Drawings showing weights, gauges, or thickness of sheet metal; type of material; joining, expansion-joint spacing, and fabrication details; and installation procedures. Materials shall not be delivered to the site until after the approved detail drawings have been returned to the Contractor.

SD-14 Samples

Materials; GA.

Samples of materials proposed for use, upon request.

SD-08 Statements

Contractor Quality Control; FIO.

Quality Assurance Plan, including a checklist of points to be observed, prior to start of roofing work.

1.4 DELIVERY, STORAGE, AND HANDLING

Materials shall be adequately packaged and protected during shipment and shall be inspected for damage, dampness, and wet-storage stains upon delivery to the jobsite. Materials shall be clearly labeled as to type and manufacturer. Sheet metal items shall be carefully handled to avoid damage. Materials shall be stored in dry, weathertight, ventilated areas until installation.

PART 2 PRODUCTS

2.1 MATERIALS

Materials shall conform to the requirements specified below, and those given in TABLE 1. Materials exposed to weather shall be copper.

2.1.1 Bituminous Cement

ASTM D 2822, Type I.

2.1.2 Fasteners

Materials shall conform to TABLE 1. Nails shall conform to ASTM F 547 or be as approved. Nails and rivets shall be copper. Screws and bolts shall be bronze. Fasteners shall be the best type for the application.

2.1.3 Felt

ASTM D 226, Type II.

2.1.4 Flux

CID A-A-51145, Type I.

2.1.5 Slip Sheet

Building paper meeting the requirements of ASTM C 1136, Type IV, style optional.

2.1.6 Sheet Metal

ASTM B 152, ASTM B 370, Light cold-rolled temper (H00) copper.

2.1.7 Solder

ASTM B 32, 95-5 tin-antimony.

2.1.8 Accessories

Accessories and other items essential to complete the sheet metal installation, though not specifically indicated or specified, shall be provided.

2.1.9 Polyvinyl Chloride (PVC) Reglets

ASTM D 1784, Class 14333D, 0.075 inch minimum thickness.

2.1.10 Through-Wall Flashing

a. Electro-sheet copper not less than 5 ounces, factory coated both sides with acid- and alkali-resistant bituminous compound not less than 6 ounces per square foot or factory covered both sides with asphalt-saturated cotton fabric, asphalt saturated glass-fiber fabric, or with 40 poundreinforced kraft paper bonded with asphalt.

2.1.11 Sheet Membrane Flashing

Self-Adhering, Polymer-Modified, Bituminous Sheet Underlayment: ASTM D 1970, minimum 40 mils (1 mm) thick. Provide primer when recommended by underlayment manufacturer. Provide underlayment underneath all standing seam metal roofing.

2.2 SEALANTS AND SEALING COMPOUNDS

Sealants and sealing compounds are specified in Section 07900 JOINT SEALING.

PART 3 EXECUTION

3.1 GENERAL

Items such as gutters and downspouts shall be fabricated in conformance with SMACNA-02 and as indicated. Unless otherwise specified or indicated, exposed edges shall be folded back to form a 1/2 inch hem on the concealed side, and bottom edges of exposed vertical surfaces shall be angled to form drips. Bituminous cement shall not be placed in contact with roofing membranes other than built-up roofing.

3.2 EXISTING COPPER SHEET METAL

Existing, original, historic copper sheet metal elements that are intact and serviceable shall be salvaged and reused whenever possible. This may include, but is not limited to, gutters, hangers, downspouts, connectors, leader heads, leader straps, basket strainers, splash pans, and other architectural sheet metal elements such as finials, and decorative panels. When work involves repair and replacement of copper sheet metal elements, new elements shall match existing original elements as closely as possible.

3.3 GALVANIC ACTION

Galvanic action between copper and iron or steel shall be avoided by the use of proper insulation. The copper shall be insulated by the following: covering the steel member with insulation; placing strips of sheet lead between the two metals; or by heavily tinning the iron.

3.4 SOLDERING AND SEAMING

3.4.1 Soldering

Edges of sheet metals shall be pretinned before soldering is begun. Soldering shall be done slowly with well heated soldering irons to thoroughly heat the seams and completely sweat the solder through the full width of the seam. Edges of lead coated material to be soldered shall be scraped or wire-brushed to produce a bright surface, and seams shall have a liberal amount of flux brushed in before soldering is begun. Soldering shall follow immediately after application of the flux. Upon completion of soldering, the acid flux residue shall be thoroughly cleaned from the sheet metal with a solution of washing soda in water and rinsed with clean water.

3.4.2 Seams

Flat-lock and soldered-lap seams shall finish not less than 1 inch wide. Unsoldered plain-lap seams shall lap not less than 3 inches unless otherwise specified. Flat seams shall be made in the direction of the flow.

3.5 COVERING ON MINOR FLAT, PITCHED, OR CURVED SURFACES

Unless otherwise indicated, minor flat, pitched, or curved surfaces, such as crickets, bulkheads, dormers, and small decks, shall be covered or flashed with 18 x 24 inch metal sheets and shall be secured with cleats. One ply of felt covered with 1 ply of slip sheet shall be applied as underlayment on wood surfaces. Two cleats shall be placed on the long side and 1 cleat shall be placed on the short side. Seams shall be locked and soldered.

3.6 CLEATS

A continuous cleat shall be provided where indicated or specified to secure loose edges of the sheet metalwork. Butt joints shall be spaced approximately 1/8 inch apart. The cleat shall be fastened to the supporting construction with nails evenly spaced not over 12 inches on centers. Where the fastening is to be made to concrete or masonry, screws shall be used and shall be driven in expansion shields set in concrete or masonry. The cleat for fascia anchorage shall be installed to extend below the supporting construction to form a drip and to allow the flashing to be hooked over the lower edge at least 3/4 inch. The cleat shall be of sufficient width to provide adequate bearing area to ensure a rigid installation. Where horizontal nailer is vented for insulation and the cleat is placed over masonry or concrete, the cleat shall be installed over 1/16 inch thick metal washers placed at screws. Washers shall be of metal that is electrolytically compatible with the continuous cleat.

3.7 EXPANSION JOINTS

Expansion joints shall be provided at 40 foot intervals, except that where the distance between the last expansion joint and the end of the continuous run is more than half the required interval spacing, an additional joint shall be provided. Joints shall be evenly spaced.

3.8 FLASHINGS

3.8.1 General

Flashings shall be installed at intersections of roof with vertical surfaces and at projections through roof. Cap flashings shall be turned around exterior corners of masonry or concrete walls at least 2 inches, shall be secured into masonry joints and into concrete with expansion anchors and shall be sealed with No. 2 or 4 sealing compound. Corner units shall have mitered joints, shall be installed with 3 inch lap joint over flashings on each side. Unless otherwise indicated, through-wall flashing shall be terminated 1/2 inch inside each exposed face of the wall. Cap flashings shall be provided over base flashings. Perforations in flashings made by masonry anchors shall be covered up by an application of bituminous plastic cement at the perforation. Exposed and unfastened flashings shall

have the edge of the strip turned under 1/2 inch. Flashing shall be installed on top of joint reinforcement.

3.8.2 Cap Flashings (Counterflashings)

Where the base flashing is not covered by siding, a cap flashing shall be built into the masonry joints lapping not less than 2 inches vertically, extending down over the base flashing 4 inches, and the edge bent back and up 1/2 inch.

3.8.3 Stepped Flashing

Stepped flashing shall be installed where sloping roofs abut vertical masonry surfaces. Separate pieces of base flashing shall be placed in alternate masonry courses. Each piece of base flashing shall extend out onto the roof at least 4 inches and shall be nailed to the deck. The stepped base flashing shall extend up along the wall not less than 4 inches and stop beneath the cap flashing. Cap flashings shall be set in a reglet into masonry and concrete construction, and cap flashing shall lap over the flashing below not less than 3 inches. The stepped base flashing at vertical joints between the sections shall be lapped not less than 3 inches.

3.8.4 Through-Wall Flashing

Through-wall flashing includes sill, lintel, and spandrel flashing. The flashing shall be laid with a layer of mortar above and below the flashing so that the total thickness of the two layers of the mortar and flashing are the same thickness as the regular mortar joints. Flashing shall be one piece for lintels and sills.

3.8.4.1 Lintel Flashing

Lintel flashing shall extend the full length of lintel. It shall extend through the wall one masonry course above the lintels and shall be bent down over the top of masonry and precast concrete lintels. Bed joints of lintels at control joints shall be underlaid with sheet metal bond breaker.

3.8.4.2 Sill Flashing

Sill flashing shall extend the full width of the sill and not less than 4 inches beyond ends of sill except at a control joint where the flashing shall be terminated at the end of the sill.

3.9 REGLETS

Reglets shall be a factory fabricated product, complete with fittings and special shapes as may be required. Open-type reglets shall be filled with fiberboard or other suitable separator to prevent crushing of the slot during installation. Reglets shall be located not less than 8 inches nor more than 16 inches above roofing not having cant strips or shall be located not less than 5 inches nor more than 13 inches above cant strip. Reglet plugs shall be spaced not over 12 inches on centers and reglet grooves shall be filled with sealant. Friction or slot-type reglets shall have metal flashings inserted the full depth of slot and shall be lightly

punched every 12 inches to crimp the reglet and cap flashing together.

3.10 DOWNSPOUTS

Downspouts shall be set plumb and not less than 1 inch from the wall. Leaders shall connect gutters on overhanging eaves to downspouts. Leaders shall be set with a slope not less than 0.3 degrees, 1/16 inch per foot or more than 30 degrees below a horizontal line. Leaders shall fit over the outlet tube in gutter bottom and shall fit into and be riveted to the downspout. Rivet spacing shall be not more than 2 inches. Strainers shall be set loosely in the eave tube opening in gutter. Joints between lengths of downspouts shall be made by telescoping the end of the upper lengths at least 3/4 inch into the lower length. Downspouts terminating in drainage lines shall be neatly fitted into downspout boots and the joint filled with a portland cement mortar cap sloped away from downspout. Downspouts terminating at splash blocks or splash pans shall be provided with stock elbow-type fittings. Downspout hangers shall be provided adjacent to the joint at the top of each section of downspout, except that the bottom section shall have an additional strap adjacent to the bottom joint when splash blocks or splash pans are required. Hangers shall be 1/16 x 1 inch flat stock of the same material as the downspout.

3.11 GUTTERS

Gutters shall be installed at locations indicated on Drawings. Gutters shall be hung with high points at ends or equidistant from downspouts and shall have a slope of not less than 0.3 degrees 1/16 inch per foot.]

3.12 SCUPPER LININGS

The interior of scupper openings shall be lined with sheet metal. The lining shall be formed to return not less than 1 inch against both faces of the wall or parapet with the outside edges folded under 1/2 inch less on the top and sides. The perimeter of the lining shall be approximately 1/2 inch less than the perimeter of the scupper. The top and sides of scuppers on the roof-deck side shall be joined to base flashing by a locked and soldered joint. The bottom edge shall be joined by a locked and soldered joint to the base flashing and where required, shall be formed with a ridge to act as a gravel stop around the scupper inlet. Surfaces to receive the lining shall be coated with bituminous cement.

3.13 CONTRACTOR QUALITY CONTROL

The Contractor shall establish and maintain a quality control procedure for sheet metal used in conjunction with roofing to assure compliance of the installed sheet metalwork with the contract requirements. Any work found not to be in compliance with the contract shall be promptly removed and replaced or corrected in an approved manner. Quality control shall include, but not be limited to, the following:

a. Observation of environmental conditions; number and skill level of sheet metal workers; condition of substrate.

b. Verification of compliance of materials before, during, and after

installation.

c. Inspection of sheet metalwork, for proper size and thickness, fastening and joining, and proper installation.

The actual quality control observations and inspections shall be documented and a copy of the documentation furnished to the Contracting Officer at the end of each day.

TABLE 1 - COPPER SHEET METAL WEIGHTS AND THICKNESSES

Item Description	Copper, Oz. per square foot
Building expansion joints:	
Cap	16
Waterstop - bellows or flanged-U-type	16
Cleats (Continuous)	24
Covering on minor flat, pitched or curved surfaces	20
Downspouts, heads and leaders	16
Flashings:	
Base	20
Cap, stepped or valley	16
Standing seam roofing:	20
Gravel stops and fasciae:	
Sheets, corrugated	16
Gutters (girth):	
Up to 380 mm	16
380 to 510 mm	16
510 to 635 mm	20
635 to 760 mm	24
Gutter brackets (girth):	
Up to 380 mm	1/8 x 1 inch
380 to 510 mm	1/4 x 1 inch
510 to 610 mm	1/4 x 1 1/2 inch

TABLE 1 - COPPER SHEET METAL WEIGHTS AND THICKNESSES

Item Description	Copper, Oz. per square foot
Gutter cleats and cover plates	16
Scupper lining	20
Strainers (wire gauge)	No.9
Reglets(1)	10
Copings	16
Pitch pockets	16

TABLE 2 - COPPER SHEET METAL JOINTS

Item Designation	Type of Joint
Building expansion joint at roof	1-1/4 inch single lock standing seam, cleated.
Cleats (Continuous)	Butt
Flashings:	
Base	1 inch flat locked, soldered. 3 inch lap for expansion joint.
Cap-in reglet	3 inch lap.
Cap - two-piece	Receiver 3 inch lap. Cap piece 3 inch lap.
Stepped	3 inch lap.

TABLE 2 - COPPER SHEET METAL JOINTS

Item Designation	Type of Joint
Sheet, smooth	Butt with 1/4 inch space.
Gutters	1 1/2 inch lap, riveted and soldered.
Pitch pockets	1 inch soldered lap.
Reglets	Butt joint.

-- End of Section --

SECTION 07810

SPRAY-APPLIED FIREPROOFING

PART 1 GENERAL

1.1 REFERENCES

The publications listed below form a part of this specification to the extent referenced. The publications are referred to in the text by basic designation only.

AMERICAN SOCIETY FOR TESTING AND MATERIALS (ASTM)

ASTM E 119	(1995a) Fire Tests of Building Construction and Materials
ASTM E 605	(1993; R 1996) Thickness and Density of Sprayed Fire-Resistive Material (SFRM) Applied to Structural Members
ASTM E 760	(1992; R 1996) Effect of Impact on Bonding of Sprayed Fire-Resistive Material Applied to Structural Members
ASTM E 761	(1992) Compressive Strength of Sprayed Fire-Resistive Material Applied to Structural Members
ASTM E 937	(1993) Corrosion of Steel by Sprayed Fire-Resistive Material (SFRM) Applied to Structural Members

UNDERWRITERS LABORATORIES (UL)

UL Fire Resist Dir	(1998) Fire Resistance Directory (2 Vol.)
UL 263	(1997) Fire Tests of Building Construction and Materials

1.2 SUBMITTALS

Government approval is required for submittals with a "GA" designation; submittals having an "FIO" designation are for information only. The following shall be submitted in accordance with Section 01330 SUBMITTAL PROCEDURES:

SD-01 Data

Fireproofing Material; GA.

Data identifying performance characteristics of fireproofing material. Data shall include recommended application requirements and indicate thickness of fireproofing that must be applied to achieve each required fire rating.

SD-09 Reports

UL Test Assembly; FIO.

Reports and test records, attesting that the fireproofing material conforms to the specified requirements. Each test report shall conform to the report requirements specified by the test method.

Field Tests; FIO.

Test reports documenting results of tests on the applied material in the project. Report shall include defects identified, repair procedures, and results of the retests when required.

SD-13 Certificates

Installer Qualifications; FIO.

Manufacturer's certification that each listed installer is qualified and trained to install the specified fireproofing. Evidence that each fireproofing installer has had a minimum of 3 years experience in installing the specified type of fireproofing.

Surface Acceptability; FIO.

Manufacturer's certification that surfaces to be protected have been inspected and are acceptable to receive spray-applied fireproofing. The statement shall list the structural members and the areas that have been inspected and certified.

Manufacturer's Inspection; FIO.

Manufacturer's certification that the spray-applied fireproofing in the entire project complies with the manufacturer's criteria and recommendations.

SD-14 Samples

Spray-Applied Fireproofing; GA.

One sample panel, 18 inches square, for each specified type of fireproofing. Also, a designated sample area of not less than 100 square feet shall be prepared. Sample area shall be representative of typical installation of fireproofing including metal decks, beams, columns and attachments. Equipment, materials and procedures used in the sample area shall be the same as, or representative of, that to be used in the work. The sample area shall be approved prior to proceeding with fireproofing

work in any other area. The approved sample area shall be used as a reference standard for applied fireproofing material. Sample area shall remain in place and open to observation until all spray-applied fireproofing is completed and accepted, at which time it may become part of the work.

1.3 DELIVERY AND STORAGE

Packaged material shall be delivered in the original unopened containers, marked to show the names of the brand and the manufacturer. Fireproofing material shall be kept dry until ready to be used, and shall be stored off the ground, under cover and away from damp surfaces. Damaged or opened containers will be rejected. Material with shelf-life shall be applied prior to expiration of the shelf-life.

1.4 ENVIRONMENTAL CONDITIONS

1.4.1 Temperature

Substrate and ambient air temperatures shall be maintained above 40 degrees F during application and for 24 hours before and after application. Relative humidity shall be maintained within the limits recommended by the fireproofing manufacturer.

1.4.2 Ventilation

Adequate ventilation shall be provided to properly dry the fireproofing after application. In enclosed areas, a minimum of 4 air exchanges per hour shall be provided by forced air circulation.

1.5 INSTALLER QUALIFICATIONS

Each installer of fireproofing material shall be trained and have a minimum of 3 years experience in the installation of fireproofing of the type specified.

1.6 MANUFACTURER'S SERVICES

The manufacturer or its representative shall be onsite prior to, periodically during, and at completion of the application, to provide the specified inspections and certifications; to certify that substrates are acceptable, and to ensure that preparations are adequate and that the material is applied according to manufacturer's recommendations and the contract requirements.

1.7 FIRE RESISTANCE RATING

Fire resistance ratings shall be in accordance with the fire rated assemblies listed in UL Fire Resist Dir. Proposed materials not listed in UL Fire Resist Dir shall have fire resistance ratings at least equal to the UL Fire Resist Dir ratings as determined by an approved independent testing laboratory, based on tests specified in UL 263 or ASTM E 119.

1.8 EXTENT OF FIREPROOFING

All structural steel, and the underside of steel floor and steel roof decks indicated to be fireproofed, shall be protected with spray-applied fireproofing to a fire resistance hour-rating as indicated on the Drawings. See Drawing A3.00.

PART 2 PRODUCTS

2.1 ACCEPTABLE PRODUCTS AND MANUFACTURERS

2.1.1 Low-Density Cementitious Fireproofing

Provide Monokote MK-6; Grace Construction Products Division, W.R. Grace & Co., or approved equal.

2.1.2 Medium Density Cementitious Fireproofing

Provide Monokote Z106, finished with "Topkote" finish; Grace Construction Products Division, W.R. Grace & Co., or approved equal.

2.2 LOW DENSITY GYPSUM BASED CEMENTITIOUS FIREPROOFING

Low Density Gypsum based cementitious fireproofing for interior concealed conditions. The sprayed material shall be a factory blended cementitious fireproofing which when mixed at the jobsite with water and applied will provide compliance with all drawings, specifications and the following performance test criteria:

2.2.1 Dry Density:

15 PCF minimum average density regardless of density indicated in referenced fire-resistive design, or greater if required to attain fire-resistance ratings indicated, as determined per ASTM E 605 or Appendix A "Alternate Method for Density Determination" of AWCI Technical Manual 12-A.

2.2.2 Deflection:

Material shall not crack or delaminate from the surface to which it is applied when tested in accordance with ASTM E759.

2.2.3 Bond Impact:

Material subject to impact tests in accordance with ASTM E760 shall not crack or delaminate from the surface to which it is applied.

2.2.4 Bond Strength:

Fireproofing, when tested in accordance with ASTM E736, shall have a minimum average bond strength of 200 psf and a minimum individual bond strength of 150 psf.

F.

2.2.5 Air Erosion:

Maximum allowable weight loss of the fireproofing material shall be 0.005 gm./ft2 when tested in accordance with ASTM E859. For laboratory tests, the minimum sprayed-on fireproofing thickness is 0.75 inch, the maximum dry density is 15 PCF, test specimens are not prepurged by mechanically induced air velocities, and tests are terminated after 24 hours.

2.2.6 Compressive Strength:

The fireproofing shall not deform more than 10 percent when subjected to compressive forces of 1000 psf when tested in accordance with ASTM E761. Minimum sprayed-on fireproofing thickness tested shall be 0.75 inch and the minimum dry density shall be as specified, but not less than 15 PCF.

2.2.7 Corrosion Resistance:

Steel with applied fireproofing shall be tested in accordance with ASTM E937 and shall not promote corrosion of steel.

2.2.8 Abrasion Resistance:

No more than 15 cm3 shall be abraded or removed from the fireproofing substrate when tested in accordance with the test methods developed by the City of San Francisco, Bureau of Building Inspection, and required by the U. S. Navy (NAVFAC).

2.2.9 Impact Penetration:

The fireproofing material shall not show a loss of more than 6 cm3 when subjected to impact penetration tests in accordance with the test methods developed by the City of San Francisco, Bureau of Building Inspection, and required by the U. S. Navy (NAVFAC).

2.2.10 Surface Burning Characteristics:

Material shall exhibit the following surface burning characteristics when tested in accordance with ASTM E84:

Flame Spread	0
Smoke Development	0

2.2.11 High Speed Air Erosion:

Materials to be used in plenums or ducts shall exhibit no continued erosion after 4 hours at an air speed of 2500 ft/min. (29 mph) when tested in accordance with the UMC (1985) Appendix A, Section 10.116 and ASTM E 859.

2.2.12 Limitations:

Monokote Type MK-6/CBF or approved equal shall be used only on beams, columns and fluted decking. For cellular decking, Type MK-6/ED, or approved equal shall be used. Spatterkote shall be applied to cellular decking before application of Type MK-6/ED.

Fire Tests:

The sprayed fireproofing material shall have been tested and reported by Underwriters' Laboratories, Inc. in accordance with the procedures of ASTM E 119.

2.2.14 Asbestos Free:

Sprayed fireproofing material and application shall meet requirements of U. S. O.S.H.A. regulation 29 C.F.R. section 1926.58, which regulates the use of asbestos in construction and shall be free of asbestos and mineral woo .

2.2.15 Mixing Water:

Mixing water shall be clean, fresh and suitable for domestic consumption and free from such amounts of mineral or organic substances as would affect the set of the fireproofing material.

2.2.16 Mold Growth:

The fireproofing product shall be tested in accordance with ASTM Standard ASTM G-21, and shall show resistance to mold growth when inoculated with aspergillus niger, and mixed spore cultures, (Tappi T487-M54 and ASTM G-21-80). Mold inhibitor shall be added by the manufacturer.

2.3 MEDIUM DENSITY PORTLAND CEMENT BASED CEMENTITIOUS FIREPROOFING

Medium density Portland cement based cementitious fireproofing: for interior exposed conditions at all Mechanical, Telecommunications, Data, and Electrical Room spaces, above ceilings at swimming pools, chemical storage areas, and elsewhere as indicated on Drawings. The sprayed material shall be a factory blended cementitious fireproofing which when mixed at the jobsite with water and applied will provide compliance with all drawings, specifications and the following performance test criteria:

2.3.1 Dry Density:

The field density shall be measured, in accordance with ASTM E 605. Minimum average density shall be 22 pcf as listed in the U.L. Fire Resistance Directory, ICBO Evaluation Report or as required by the authority having jurisdiction.

2.3.2 Deflection:

Material shall not crack or delaminate from the surface to which it is applied when tested in accordance with ASTM E759.

2.3.3 Bond Impact:

Material subject to impact tests in accordance with ASTM E 760 shall not crack or delaminate from the surface to which it is applied.

2.3.4 Bond Strength:

Fireproofing, when tested in accordance with ASTM E 736, shall have a

minimum average bond strength of 1000 psf and a minimum individual bond strength of 750 psf.

2.3.5 Air Erosion:

Maximum allowable weight loss of the fireproofing material shall be 0.005 gm./ft2 when tested in accordance with ASTM E 859.

2.3.6 Compressive Strength:

The fireproofing shall not deform more than 10 percent when subjected to compressive forces of 10000 psf when tested in accordance with ASTM E 761.

2.3.7 Corrosion Resistance:

Steel with applied fireproofing shall be tested in accordance with ASTM E 937 and shall not promote corrosion of steel.

2.3.8 Durometer Hardness:

The fireproofing material shall have a minimum Durometer Hardness value of 9 when tested in accordance with ASTM D 2240.

2.3.9 Surface Burning Characteristics:

Material shall exhibit the following surface burning characteristics when tested in accordance with ASTM E84:

Flame spread	0
Smoke Development	0

2.3.10 Use Limitations

Monokote Type Z106 is to be used only on beams, columns and fluted decking.

2.3.11 Fire Tests

The sprayed fireproofing material shall have been tested and reported by Underwriters' Laboratories, Inc. in accordance with the procedures of ASTM E 119.

2.3.12 Asbestos Content:

Sprayed fireproofing material and application shall meet requirements of U. S. O.S.H.A. regulation 29 C.F.R. section 1926.58, which regulates the use of asbestos in construction and shall be free of asbestos and mineral wool.

2.3.13 Mixing Water:

Mixing water shall be clean, fresh and suitable for domestic consumption and free from such amounts of mineral or organic substances as would affect the set of the fireproofing material.

2.3.14 Mold Growth:

The fireproofing product shall be tested in accordance with ASTM G-21, and shall show resistance to mold growth when inoculated with aspergillus niger, and mixed spore cultures, (Tappi T487-M54 and ASTM G-21-80). Mold inhibitor shall be added by the manufacturer.

2.4 BONDING ADHESIVE

Provide W.R. Grace Product No. 7460 Concentrate (Clear) and No. 7450 Adhesive (Clear), or approved equal.

1. Provide bonding adhesive over all primed and/or painted steel indicated to receive cementitious fire-proofing material.

2.5 SEALER

Sprayed fireproofing that will be exposed to view in the completed work, such as in mechanical and electrical rooms shall be sealed after application. Sealer shall be the type approved by the manufacturer of the fireproofing material and shall be white color.

PART 3 EXECUTION

3.1 SURFACE PREPARATION

Surfaces to be fireproofed shall be thoroughly cleaned of dirt, grease, oil, loose paint, loose rust, rolling lubricant, mill scale or other contaminants that will interfere with the proper bonding of the sprayed fireproofing to the substrate. Overhead areas to be fireproofed shall be cleared of all obstructions interfering with the uniform application of the spray-applied fireproofing. Hardware such as support sleeves, inserts, clips, hanger attachment devices and the like shall be installed prior to the application of the fireproofing. Condition of the surfaces shall be inspected and acceptable to the manufacturer prior to application of spray-applied fireproofing. Applications listed for use on primed surfaces shall be coordinated with the manufacturer and detailed in submittal item SD-01 Data.

Bonding Adhesive: Provide bonding adhesive over all shop primed or field painted structural steel or steel deck, as required by fire-proofing manufacturer.

3.2 PROTECTION

Surfaces not to receive spray-applied fireproofing shall be covered to prevent contamination by splatter, rebound and overspray. Exterior openings in areas to receive spray-applied fireproofing shall be covered prior to and during application of fireproofing with tarpaulins or other approved material. Surfaces not to receive fireproofing shall be cleaned of fireproofing and sealer.

3.3 MIXING

Fireproofing material shall be mixed in accordance with the manufacturer's

recommendations.

3.4 APPLICATION

3.4.1 Sequence

Prior to application of fireproofing in each area, the manufacturer shall inspect and approve all surfaces for proper preparation, application equipment, water supply and pressure, and the application procedures. Fireproofing shall be applied to underside of steel roof deck or steel floor assemblies only after respective roof or floor construction is complete, and only after overhead deck indicated to be painted prior to fireproofing work has been painted. Fireproofing material shall be applied prior to the installation of ductwork, piping and conduits which would interfere with uniform application of the fireproofing. The Contractor shall not allow roof traffic during application and curing period.

3.4.2 Application Technique

Water pressure and volume shall be maintained to manufacturer's recommendations throughout the fireproofing application. Fireproofing material shall be applied to the thickness established for the specified fire resistance rating, in accordance with the procedure recommended by the manufacturer, and to a uniform density and texture. Fireproofing material shall not be tamped to achieve the desired density. Sealer shall be applied to all fireproofing.

3.5 FIELD TESTS

The applied fireproofing shall be tested by an approved independent testing laboratory, in approved locations, for density, cohesion/adhesion force as specified, and for thickness in accordance with ASTM E 605. Two sets of tests shall be conducted on each floor or 10,000-square-foot area, whichever is less, at the approved locations. Any area showing less than minimum requirements shall be corrected. Proposed corrective measures, in writing, shall be approved before starting the corrective action. Corrected work shall be retested.

3.5.1 Thickness, Density, Cohesion/Adhesion

Each structural component type shall be tested at floor and roof decks, beams, columns, joists, and trusses. Minimum average thickness shall be as required by UL Fire Resist Dir. Density and cohesion/adhesion shall be as specified.

3.5.2 Repair

Additional fireproofing material may be added to provide proper thickness. Rejected areas of fireproofing shall be corrected to meet specified requirements by adding fireproofing material to provide the proper thickness, or by removing defects and respraying with new fireproofing material. Repairs shall use same type of fireproofing material as originally applied. Repaired areas shall be retested and reinspected. Fireproofing material shall be applied to voids or damaged areas by

hand-trowel, or by respraying.

3.5.3 Manufacturer's Inspection

The manufacturer shall inspect the fireproofing work after the work is completed on each floor or area, including testing, repair and clean-up, and shall certify that the work complies with the manufacturer's criteria and recommendations. Before the sprayed material is covered, and after all of the fireproofing work is completed, including repair, testing, and clean-up; and after mechanical, electrical and other work in contact with fireproofing material has been completed, the manufacturer shall re-inspect the work and certify that the entire project complies with the manufacturer's criteria and recommendations.

-- End of Section --

SECTION 07840

FIRESTOPPING

PART 1 GENERAL

1.1 REFERENCES

The publications listed below form a part of this specification to the extent referenced. The publications are referred to in the text by basic designation only.

AMERICAN SOCIETY FOR TESTING AND MATERIALS (ASTM)

ASTM E 84	(1996a) Surface Burning Characteristics of Building Materials
ASTM E 119	(1995a) Fire Tests of Building Construction and Materials
ASTM E 814	(1994b) Fire Tests of Through-Penetration Fire Stops

UNDERWRITERS LABORATORIES (UL)

UL 723	(1996) Test for Surface Burning Characteristics of Building Materials
UL 1479	(1994; Rev thru Jul 1997) Fire Tests of Through-Penetration Firestops
UL 2079	(1997) Tests for Fire Resistance of Building Joint Systems
UL Fire Resist Dir	(1997) Fire Resistance Directory

1.2 SUBMITTALS

Government approval is required for submittals with a "GA" designation; submittals having an "FIO" designation are for information only. The following shall be submitted in accordance with Section 01330 SUBMITTAL PROCEDURES:

SD-04 Drawings

Firestopping Materials; GA.

Detail drawings including manufacturer's descriptive data, typical details, installation instructions and the fire-test data and/or report as

appropriate for the fire resistance rated construction and location. Submittal shall indicate the firestopping material to be provided for each type of application. When more than 5 penetrations or construction joints are to receive firestopping, drawings shall indicate location and type of application.

SD-13 Certificates

Firestopping Materials; FIO.

Certificates attesting that firestopping material complies with the specified requirements. The label or listing of the Underwriters Laboratories will be acceptable evidence. In lieu of the label or listing, a written certificate may be submitted from an approved, nationally recognized testing agency equipped to perform such services, stating that the items have been tested and conform to the specified requirements and testing methods.

Installer Qualifications; FIO.

Documentation of training and experience.

Inspection; FIO.

Manufacturer's representative certification stating that firestopping work has been inspected and found to be applied according to the manufacturer's recommendations and the specified requirements.

1.3 GENERAL REQUIREMENTS

Firestopping shall consist of furnishing and installing a material or a combination of materials to form an effective barrier against the spread of flame, smoke and gases, and maintain the integrity of fire resistance rated walls, partitions, floors, and ceiling-floor assemblies, including through-penetrations and construction joints. Through-penetrations include the annular space around pipes, tubes, conduit, wires, cables and vents. Construction joints include those used to accommodate expansion, contraction, wind, or seismic movement; firestopping material shall not interfere with the required movement of the joint. Gaps requiring firestopping include gaps between: the curtain wall and the floor slabs; tops of curtain walls and roof deck; tops of rated partitions/chases and floor slabs; and between the top of fire-rated partitions/chases and the roof decks.

1.4 STORAGE AND DELIVERY

Materials shall be delivered in the original unopened packages or containers showing name of the manufacturer and the brand name. Materials shall be stored off the ground and shall be protected from damage and exposure to elements. Damaged or deteriorated materials shall be removed from the site.

1.5 INSTALLER QUALIFICATIONS

Installer of firestopping material shall be trained by the manufacturer or the manufacturer's representative, and shall have a minimum of 3 years experience in the installation of firestopping of the type specified.

PART 2 PRODUCTS

2.1 FIRESTOPPING MATERIALS

Firestopping materials shall consist of commercially manufactured products complying with the following minimum requirements:

2.1.1 Fire Hazard Classification

Material shall have a flame spread of 25 or less, and a smoke developed rating of 50 or less, when tested in accordance with ASTM E 84 or UL 723. Material shall be an approved firestopping material as listed in UL Fire Resist Dir or by a nationally recognized testing laboratory.

2.1.2 Toxicity

Material shall be nontoxic to humans at all stages of application.

2.1.3 Fire Resistance Rating

Firestopping will not be required to have a greater fire resistance rating than that of the assembly in which it is being placed.

2.1.3.1 Through-Penetrations

Firestopping materials for through-penetrations, as described in paragraph GENERAL REQUIREMENTS, shall provide "F" and "T" fire resistance ratings in accordance with ASTM E 814 or UL 1479, except that T Ratings are not required for penetrations smaller than or equal to a 4 inch nominal pipe or 16 square inches in overall cross sectional area. Fire resistance ratings shall be as indicated on Drawings and as required by code.

2.1.3.2 Construction Joints and Gaps

Fire resistance ratings of construction joints, as described in paragraph GENERAL REQUIREMENTS, and gaps such as those between floor slabs or roof decks and curtain walls shall be the same as the construction in which they occur. Construction joints and gaps shall be provided with firestopping materials and systems that have been tested per ASTM E 119 or UL 2079 to meet the required fire resistance rating.

PART 3 EXECUTION

3.1 PREPARATION

Areas to receive firestopping shall be free of dirt, grease, oil, or loose materials which may affect the fitting or fire resistance of the firestopping system.

3.2 INSTALLATION

Firestopping material shall completely fill void spaces regardless of geometric configuration, subject to tolerance established by the manufacturer. Firestopping for filling floor voids 4 inches or more in any direction shall be capable of supporting the same load as the floor is designed to support or shall be protected by a permanent barrier to prevent loading or traffic in the firestopped area. Firestopping shall be installed in accordance with manufacturer's written instructions. Firestopping shall be provided in the following locations, except in floor slabs on grade:

a. All penetrations, including, but not limited to, ducts, conduits, tubings, cable and pipes through floors, roofs, and through fire-resistance rated walls, partitions, and ceiling-floor assemblies.

b. Penetrations of vertical shafts such as pipe chases, elevator shafts, and utility chutes.

c. Gaps at the intersection of floor slabs and curtain walls, including inside of hollow curtain walls at the floor slab.

d. Gaps at perimeter of fire-resistance rated walls and partitions, such as between the top of the walls and the bottom of roof decks.

e. Construction joints in floors and fire rated walls and partitions.

f. Other locations where required to maintain fire resistance rating of the construction.

3.3 INSPECTION

Firestopped areas shall not be covered or enclosed until inspection is complete and approved. A manufacturer's representative shall inspect the applications initially to ensure adequate preparations (clean surfaces suitable for application, etc.) and periodically during the work to assure that the completed work has been accomplished according to the manufacturer's written instructions and the specified requirements.

-- End of Section --

SECTION 07900

JOINT SEALING

PART 1 GENERAL

1.1 REFERENCES

The publications listed below form a part of this specification to the extent referenced. The publications are referred to in the text by basic designation only.

AMERICAN SOCIETY FOR TESTING AND MATERIALS (ASTM)

ASTM C 834 (1995) Latex Sealants

ASTM C 920 (1995) Elastomeric Joint Sealant

1.2 SUBMITTALS

Government approval is required for submittals with a "GA" designation; submittals having an "FIO" designation are for information only. The following shall be submitted in accordance with Section 01330 SUBMITTAL PROCEDURES:

SD-01 Data

Backing; FIO. Bond-Breaker; FIO.

Sealant; FIO.

Manufacturer's descriptive data including storage requirements, shelf life, curing time, instructions for mixing and application, and primer data (if required). A copy of the Material Safety Data Sheet shall be provided for each solvent, primer or sealant material.

SD-13 Certificates

Sealant; FIO.

Certificates of compliance stating that the materials conform to the specified requirements.

1.3 ENVIRONMENTAL REQUIREMENTS

The ambient temperature shall be within the limits of 40 to 90 degrees F when the sealants are applied.

1.4 DELIVERY AND STORAGE

Materials shall be delivered to the job in the manufacturer's original

unopened containers. The container label or accompanying data sheet shall include the following information as applicable: manufacturer, name of material, formula or specification number, lot number, color, date of manufacture, mixing instructions, shelf life, and curing time at the standard conditions for laboratory tests. Materials shall be handled and stored to prevent inclusion of foreign materials. Materials shall be stored at temperatures between 40 and 90 degrees F unless otherwise specified by the manufacturer.

PART 2 PRODUCTS

2.1 GENERAL REQUIREMENTS

Before installation check each sealant for compatibility with adjacent materials and surfaces and with indicated exposures. Select sealers which are recommended by manufacturer for each application indicated. Where exposed to pedestrian or vehicular traffic, provide sealants which are non-tracking and are strong enough to withstand the traffic without damage.

Provide colors as indicated in Section 09915, COLOR SCHEDULE.

2.2 SELF-LEVELING POLYURETHANE SEALANT

Provide two or more part, self-leveling, polyurethane based elastomeric sealant, complying with ASTM C 920, Fed. Spec. TT-S-00227E Type 1 Class A, having Shore A hardness of not less than 30 when tested according to ASTM C 920, cured modulus of elasticity at 100% elongation of not more than 150 psi when tested according to ASTM D 412, and tear resistance of not less than 50 lbs./inch when tested according to ASTM D 624.

Where joint surfaces contain bituminous materials, provide modified sealants which are compatible with bituminous materials encountered.

Provide one of the following products that meet or exceed specified requirements:

1. Pecora Urexpan NR-2 0.
2. Mameco Vulkem 245 or 255.
3. Sika 2C, SL.
4. Sonneborn Sonolastic PvJtSt.
5. Tremco THC 900.

2.2.1 Extent of Self-Levelling Polyurethane Sealant:

Provide self-leveling polyurethane sealant at all interior and exterior paving and floor joint locations, including contraction/construction joints unless otherwise indicated or required to be sealed with another type of sealant by the Contract Documents.

2.3 NON-SAG POLYURETHANE SEALANT

Provide multi-part, non-sag, polyurethane based elastomeric sealant, complying with ASTM C 920 Type M, Grade NS, Class 25, Fed. Spec. TT-S-00227E Class A, having Shore A hardness of 20 to 30, cured modulus of

elasticity at 100% elongation of not more than 75 psi, and tear resistance of not less than 50 lbs./inch when tested according to ASTM D 624.

Provide one of the following products that meet or exceed specified requirements:

1. Mameco International Vulkem 227
2. Sika Sikaflex 2c NS.
3. Sonneborn Sonolastic NP 2.
4. Tremco Dymeric

2.3.1 Extent of Non-Sag Polyurethane Sealant:

Provide non-sag polyurethane sealant for all metal panel to metal panel joints, metal panel to cast-stone joints, metal panel to metal window joints, masonry to metal panel joints, masonry to masonry joints, masonry to cast-stone joints, Cast stone-to-cast stone joints, cast-stone to metal window joints, and all other joints in the exterior wall assembly unless otherwise indicated or required to be sealed with another type of sealant by the Contract Documents.

2.4 SILICONE RUBBER SEALANT

Provide one part, silicone rubber based elastomeric sealant, complying with ASTM C 920 Type S, Class 25, Grade NS and Fed. Spec. TT-S-001543A Class A.

Provide mold and mildew resistant, sanitary interior type sealant. Provide one of the following products that meet or exceed specified requirements:

1. Dow 78 .
2. General Electric 1702 Sanitary.
3. Pecora 863.
4. Rhodorsil 6b White.
5. Sonneborn OmniPlus.
6. Tremco Proglaze.

2.4.1 Extent of Silicone Rubber Sealant:

Provide silicone rubber sealant for interior joints around plumbing fixtures and tile to tile joints and tile to non-tile joints.

2.5 ACRYLIC LATEX SEALANT

Provide permanently flexible, latex rubber modified acrylic emulsion sealant, complying with ASTM C 834. Provide one of following products that meet or exceed specified requirements:

1. Pecora AC-20
2. Tremco Acrylic Latex 834
3. Sonneborn Sonolac

2.5.1 Extent of Acrylic Latex Sealant:

Provide acrylic latex sealant for use at mirrors, for exposed acoustical

sealant, for interior gaps, and for interior joints except where silicone rubber sealant is specified, indicated, or required by the Contract Documents.

At interior joints greater than 1/2 in. in width or subjected to periodic building movement, substitute exterior Non-Sag or Self-Levelling type sealant specified above.

Where surrounding wall surfaces are to be left unpainted, substitute exterior Non-Sag or Self-Levelling type sealant specified above.

2.6 METAL SEAM SEALANT

Provide metal seam sealant, specifically compounded to seal very thin joints in metal to metal joints and to match adjacent metal colors and finishes. Provide one of the following products:

1. Protective Treatments, Inc. PTI 200.
2. Tremco Seam Sealer

2.6.1 Extent of Metal Seam Sealant:

Provide seam sealant for metal to metal joints in aluminum entrance and storefront, window and curtain wall systems, and at copper-to-copper joints in flashings.

2.7 SEALANT FOR WATER IMMERSION

Provide multi-part based polysulfide sealant, complying with ASTM C 719 Type M, Grade NS, Class 12-1/2, with a history of field experience in sealing joints immersed intermittently or continuously in water of same composition as that to which sealant will be exposed after installation. Provide one of the following products, or Contracting Officer approved equal:

1. Bostik Chem-Calk 4 0.
2. Pecora GC-2 Synthacalk.
3. Sonneborn Sonolastic Two-Part.

2.7.1 Extent of Sealant for Water Immersion:

Provide sealant for water immersion at joints located in shower enclosures.

2.8 PREFORMED, PRECOMPRESSED, IMPREGNATED FOAM SEALANT

Provide manufacturer's standard preformed, precompressed, impregnated open-cell foam sealant manufactured from high-density urethane foam impregnated with a nondrying, water-repellant agent; factory-produced in precompressed sizes in roll or stick form to fit joint widths indicated. Provide foam sealant permanently elastic, mildew-resistant, nonmigratory, nonstaining, compatible with substrates, and complying with the following requirements:

1. Impregnating Agent: Manufacturer's standard

2. Density: 8 - 10 lb./cu. ft.
3. Backing: Manufacturer's standard pressure sensitive adhesive, factory applied to one side, with protective wrapping.

Provide one of the following products, or Contracting Officer approved equal:

1 Emseal Greyflex; Emseal Corp.
2. Will-Seal 150; Wil-Seal Construction Foams Div., Illbruck.
3. York-Seal 100; York Manufacturing, Inc.

Extent: Provide preformed, precompressed, impregnated foam sealants at locations indicated on Drawings.

2.9 MISCELLANEOUS MATERIALS

2.9.1 Primer:

Provide primer recommended by sealant manufacturer for surfaces to be adhered to.

2.9.2 Bond Breaker Tape:

Provide polyethylene or other plastic tape recommended by sealant manufacturer to prevent three-sided adhesion.

2.9.3 Backer Rod:

Provide compressible rod of durable nonabsorptive material recommended by sealant manufacturer for compatibility with sealant. Provide products of one of the following manufacturers:

1. Backer Rod Manufacturing and Supply C .
2. Dow Chemical Co.
3. W. R. Meadows, Inc.
4. Williams Products, Inc.
5. Woodmont Products, Inc.

2.9.4 Miscellaneous Requirements:

Joint backing for general use at joints in horizontal surfaces shall consist of two rows of butyl rubber or neoprene foam rod in contact with one another, and each compressed to approximately 2/3 original width when in place.

Provide miscellaneous materials of type that will not bleed through sealant, discolor surface, or produce other deleterious effects. Select size to provide compression to approximately 2/3 original width when in place. Provide backing material profile concave to the rear of the sealant, and equipped with a bond-breaking film.

PART 3 EXECUTION

3.1 GENERAL

3.1.1 Inspection

The Installer shall examine substrates and conditions under which this work is to be performed and notify Contractor, in writing, of conditions detrimental to proper completion of work. Do not proceed with work until unsatisfactory conditions are corrected. Beginning of sealant work means Installer's acceptance of joint surfaces and conditions.

3.1.2 Preparation - General

Strictly comply with manufacturers' instructions and recommendations, except where more restrictive requirements are specified in this Section.

Clean joint surfaces immediately before installation of sealants, primers, tapes and fillers. Remove substances which could interfere with bond. Etch or roughen joint surfaces to improve bond. Surfaces which have been given protective coatings and those that contain oil or grease shall be thoroughly cleaned with xylol or MEK solvent, with due precautions taken to minimize hazards.

Unless otherwise indicated, use of sealants shall conform to the following: ASTM C 790 for latex sealants and ASTM C 962 for other sealants.

3.1.3 Surface Preparation

The surfaces of joints to receive sealant or caulk shall be free of all frost, condensation and moisture. Oil, grease, dirt, chalk, particles of mortar, dust, loose rust, loose mill scale, and other foreign substances shall be removed from surfaces of joints to be in contact with the sealant. Oil and grease shall be removed with solvent and surfaces shall be wiped dry with clean cloths. For surface types not listed below, the sealant manufacturer shall be contacted for specific recommendations.

3.1.4 Concrete and Masonry Surfaces

Where surfaces have been treated with curing compounds, oil, or other such materials, the materials shall be removed by sandblasting or wire brushing. Laitance, efflorescence and loose mortar shall be removed from the joint cavity.

3.1.5 Steel Surfaces

Steel surfaces to be in contact with sealant shall be sandblasted or, if sandblasting would not be practical or would damage adjacent finish work, the metal shall be scraped and wire brushed to remove loose mill scale. Protective coatings on steel surfaces shall be removed by sandblasting or by a solvent that leaves no residue.

3.1.6 Aluminum Surfaces

Aluminum surfaces to be in contact with sealants shall be cleaned of temporary protective coatings. When masking tape is used for a protective cover, the tape and any residual adhesive shall be removed just prior to

applying the sealant. Solvents used to remove protective coating shall be as recommended by the manufacturer of the aluminum work and shall be non-staining.

3.1.7 Wood Surfaces

Wood surfaces to be in contact with sealants shall be free of splinters and sawdust or other loose particles.

3.2 APPLICATION - GENERAL

3.2.1 Masking Tape

Masking tape shall be placed on the finish surface on one or both sides of a joint cavity to protect adjacent finish surfaces from primer or sealant smears. Masking tape shall be removed within 10 minutes after joint has been filled and tooled.

3.2.2 Backing

Backing shall be installed to provide the indicated sealant depth. The installation tool shall be shaped to avoid puncturing the backing.

3.2.3 Bond-Breaker

Bond-breaker shall be applied to fully cover the bottom of the joint without contaminating the sides where sealant adhesion is required.

3.2.4 Primer

Primer shall be used on concrete masonry units, wood, or other porous surfaces in accordance with instructions furnished with the sealant. Primer shall be applied to the joint surfaces to be sealed. Surfaces adjacent to joints shall not be primed.

3.2.5 Sealant

Sealant shall be used before expiration of shelf life. Multi-component sealants shall be mixed according to manufacturer's printed instructions. Sealant in guns shall be applied with a nozzle of proper size to fit the width of joint. Joints shall be sealed as detailed in the drawings. Sealant shall be forced into joints with sufficient pressure to expel air and fill the groove solidly. Sealant shall be installed to the indicated depth without displacing the backing. Unless otherwise indicated, specified, or recommended by the manufacturer, the installed sealant shall be dry tooled to produce a uniformly smooth surface free of wrinkles and to ensure full adhesion to the sides of the joint; the use of solvents, soapy water, etc., will not be allowed. Sealants shall be installed free of air pockets, foreign embedded matter, ridges and sags. Sealer shall be applied over the sealant when and as specified by the sealant manufacturer.

3.3 INSTALLATION

Schedule work as long as possible after completion of concrete work and

finished masonry work.

Provide backer rods for liquid sealants except where specifically recommended against by sealant manufacturers.

Prevent three sided adhesion by use of bond breaker tapes or backer rods.

Force sealant into joints to provide uniform, dense, continuous ribbons free from gaps and air pockets. Completely wet both joint surfaces equally on opposite sides.

Except in hot weather, make sealant surface slightly concave. Install sealants so that compressed sealants do not protrude from joints. Dry tool sealants to form a smooth dense surface. At horizontal joints form a slight cove to prevent trapping water.

Provide sealants to depths indicated, or if not indicated, follow manufacturer's recommendations.

3.4 EXTENT OF SEALANT WORK

3.4.1 General Extent:

Seal joints indicated, and all interior and exterior joints, gaps, seams, and intersections between dissimilar materials. Provide elastomeric sealant installation with backer rod in all interior and exterior control joints.

3.4.2 Exterior Sealing:

Without limitation, the work of this Section includes sealing the following:

1. Masonry to masonry joints.
2. Masonry to other exterior wall materials, including cast stone, concrete, metal, and wood.
3. Metal to metal joints.
4. Wood to wood and wood to metal joints.
5. Concrete to concrete joints.
6. Cast stone to cast stone.
7. Cast stone to other exterior wall materials including masonry, wood, and metal.
8. Joints and cracks in paving and walks.
9. Joint fillers for all joints.
10. Gaps to be sealed.

3.4.3 Interior Sealing:

Without limitation, the work of this Section includes sealing the following:

1. Perimeters of door frames, window frames, and metal and wood frames.

2. Metal to gypsum drywall joints.

3. Top of wall base along irregular walls.

4. Between acoustical ceiling edge angle and irregular walls.

5. Tile to tile joints inside corners, tile to metal joints, and tile to gypsum drywall joints.

6. Splash to counter joints and splash to wall joints at countertops.

7. Completely around plumbing fixtures, fittings, and trim to countertops, walls and floors.

8. Exposed acoustical sealants, at tops and bottoms of stud partition walls around mechanical rooms, elevator machine rooms, toilet rooms, and at other acoustic partitions as indicated.

9. All penetrations, gaps, holes, etc. at interior surfaces.

3.4.4 Thresholds:

Thresholds of exterior doors shall be set in full beds of exterior sealant, not less than 3/8 in. thick. At Contractor's option, a polybutene or polyisobutylene sealant by same manufacturer may be used at thresholds.

3.5 CURING

Cure sealants in strict compliance with manufacturers' instructions and recommendations to obtain highest quality surface and maximum adhesion. Make every effort to minimize accelerated aging effects and increase in modulus of elasticity.

3.6 CLEANING AND PROTECTION

Remove smears from adjacent surfaces immediately, as the work progresses. Exercise particular care to prevent smearing or staining of surrounding surfaces which will be exposed in the finished work, and repair any damage done to same as result of this work without additional cost to Owner.

Remove and replace work that is damaged or deteriorated.

Clean adjacent surfaces using materials and methods recommended by sealant manufacturer. Remove and replace work that cannot be successfully cleaned.

Provide temporary protection to ensure work being without damage or deterioration at time of final acceptance. Remove protection immediately

before final acceptance.

-- End of Section --

SECTION 07920

SWIMMING POOL SEALANTS AND CAULKING

PART 1 GENERAL

1.1 SUBMITTALS

Government approval is required for submittals with a "GA" designation; submittals having an "FIO" designation are for information only. The following shall be submitted in accordance with Section 01330 SUBMITTAL PROCEDURES:

SD-01 Data

Manufacturer's Descriptive Data; GA.

Submit complete descriptive literature for each type of material. Clearly mark data to indicate which type the Contractor intends to provide. Data shall state conformance to specified requirements. Data for sealant and caulking shall include application instructions, shelf life, mixing instructions for multicomponent sealants, and recommended cleaning solvents.

SD-13 Certificates

Certificates of Conformance or Compliance; GA.

Submit certificates from the manufacturers attesting that materials meet the specified requirements.

SD-14 Samples

Color Samples; GA.

Submit three samples of each color for each sealant and caulking type to verify that products match the colors indicated or required. Where colors are not indicated, submit not less than five different samples of manufacturer's standard colors for selection by the Contracting Officer.

1.2 DESCRIPTION OF WORK

Work of this Section includes providing all labor, materials, and equipment to complete the sealants and caulking work at the swimming pool.

1.3 SAMPLE JOINTS

Before Sealant and Caulking Work is started, provide a sample of each type of finished joint where directed. The sample shall show the workmanship, bond, and color of sealant or caulking. The workmanship, bond, and color of Work throughout the project shall match that of the approved sample

joints.

1.4 ENVIRONMENTAL CONDITIONS

The ambient temperature shall be within the limits of 40 and 100 degrees F when the sealant and caulking are applied, unless noted otherwise herein.

1.5 DELIVERY AND STORAGE

Deliver materials to the job site in the manufacturer's original shipping containers with brand names, date of manufacture, color, and material designation clearly marked thereon. Containers of elastomeric sealant shall be labeled as to type, class, grade, and use. Carefully handle and store materials to prevent inclusion of foreign materials or subjection to sustained temperatures exceeding 100 degrees F or less than 40 degrees F.

PART 2 PRODUCTS

2.1 MATERIALS

General: Products shall conform to the reference documents listed for each use. Color of sealant shall match adjacent surface color unless specified otherwise. For ASTM C920 sealants, use a sealant that has been tested on the types of substrate to which it will be applied.

1. Interior Sealant: ASTM C920, Type S or M, Grade NS, Class 12.5, Use NT. Color of sealant shall be as selected.

2. Floor Joint Sealant: ASTM C920, Type S or M, Grade P, Class 25, Use T. Color of sealant shall be as selected.

3. Primer for Sealant: Use a non-staining, quick-drying type and consistency recommended by the sealant manufacturer for the particular application.

4. Bond Breakers: Use the type and consistency recommended by the sealant manufacturer for the particular application.

5. Backstops: Use glass fiber roving or neoprene, butyl, polyurethane, or polyethlene foams free from oil or other staining elements as recommended by the sealant manufacturer. Backstop material shall be compatible with the sealant. Do not use oakum and other types of absorptive materials as backstops.

2.2 POOL DECK EXPANSION JOINT SEALANT

Manufacturer: Sonneborn "SL2" 2-component chemically cured urethane sealant, color to match Keystone Kool Deck.

2.3 POOL DECK EXPANSION JOINT BACKER

#16 silica sand

2.4 POOL EXPANSION JOINT SEALANT

Manufacturer: Sonneborn "Two Part Polysulfide" 2-component chemically cured polysulfide rubber, color: white.

2.5 BACKER ROD

Manufacturer: Sonneborn Sonolastic Closed Cell Backer Rod.

PART 3 EXECUTION

3.1 GENERAL SURFACE PREPARATION

Surfaces shall be clean, dry to the touch, and free from frost, moisture, grease, oil, wax, lacquer, paint, or other foreign matter that would tend to destroy or impair adhesion. Where adequate grooves have not been provided, clean out grooves to a depth of 1/2 inch and grind to a minimum width of 1/4 inch without damage to the adjoining Work. No grinding shall be required on metal surfaces.

1. Steel Surfaces: Remove loose mill scale by sandblasting or, if sand blasting is impractical or would damage finish Work, scraping and wire brushing. Remove protective coatings by sandblasting or using a solvent that leaves no residue.

3.2 SEALANT PREPARATION

Do not modify the sealant by addition of liquids, solvents, or powders. Mix multicomponent elastomeric sealants in accordance with manufacturer's printed instructions.

3.3 GENERAL APPLICATION

3.3.1 Backstops:

Where joint cavities are constructed deeper than indicated, tightly pack the back or bottom with backstop material to provide a joint of the depth indicated. Install backstops dry and free of tears or holes.

3.3.2 Primer:

Just prior to application of sealant, clean out loose particles from joints. Apply primer in accordance with sealant manufacturer's directions. Do not apply primer to exposed finish surfaces.

3.3.3 Bond Breaker:

Provide bond breakers as recommended by the sealant manufacturer for each type of joint and sealant used.

3.3.4 Sealant:

Use a sealant that is compatible with the material to and against which it is applied. Do not use a sealant that has exceeded its shelf live or has become too jelled to be discharged in a continuous flow from the gun.

Apply sealant in accordance with the manufacturer's printed instructions. Force sealant into joints with sufficient pressure to fill the joints solidly. Sealant shall be uniformly smooth and free of wrinkles.

1. Interior Sealant: Provide sealant at all exposed joints in swimming pool and at all joints indicated to receive sealant.

2. Floor Joint Sealant: Provide sealant in all control joints and in other floor joints indicated or specified.

3.4 POOL DECK EXPANSION JOINT SEALANT

3.4.1 Joint Preparation

1. The number of joints and joint width should be designed for a maximum of ±25% movement. The depth of the sealant should be 1/2 the width of the joint with a maximum depth of 1/2" (12.7 mm) and a minimum of 1/4" (6.35 mm).

2. In joints of 1/4" to 1/2" (6.4 - 12.7 mm), the sealant depth at midpoint should be 1/4" (6.4 mm). In joints of 1/2" to 1" (12.7 - 25.4 mm), the depth at midpoint should be 1/4" to 1/2" (6.4 to 12.7 mm).

3. In deep joints, the sealant depth must be controlled by Closed-Cell Backer-Rod or Soft Backer-Rod. Where the joint depth does not permit the use of Backer-Rod, a bondbreaker (polyethylene strip) must be used to prevent three-point bonding.

4. To maintain the recommended sealant depth, install Backer-Rod by compressing and rolling it into the joint channel without stretching it lengthwise. Backer-Rod should be about 1/8" larger in diameter than the width of the joint to allow for compression. Backer-Rod becomes an integral part of the joint. The sealant does not adhere to it, and no separation bondbreaker is required. Do not prime or puncture the backer-rod.

3.4.2 Surface Preparation

1. Remove any old joint sealing material by mechanical means. If joint surfaces have absorbed oils, sufficient concrete must be removed to ensure a clean surface.

2. Joint surfaces must be structurally sound, dry, clean, and free of all loose aggregate, laitance, oil, grease, asphalt, paint, wax, mastic compounds, waterproofing compounds, or form release materials.

3.4.3 Priming

1. Prime Joint surfaces with Primer 733 or 766 (see Form No. SJ-431) before sealing. If the surfaces are other than masonry or concrete, test first to determine adhesion. Technical assistance is available from Sonneborm.

2. Apply primer in a thin uniform film. Avoid buildup of film.

3. Allow approximate 30 minuets drying time before applying sealant.

4. Reapply primer if not sealed the same day.

5. To minimize contamination of adjacent surfaces, apply masking tape and remove before sealant has begun to thicken and set.

6. Coverage rate of primers is approximately 35 square feet per pint.

3.4.4 Mixing

1. SL 2 is a two-component system and must be thoroughly mixed before use. The oversize Part A container allows for the addition and mixing of Part B and the color pigment.

2. 1-1/3 gallon (5.67 L) unit: (1) Transfer Part B to Part A container using a spatula or knife. It is imperative that the entire contents of Part B be combined with Part A. (2) With a slow speed drill and a slotted mixing paddle, thoroughly mix 2-3 minutes. The paddle blade must be kept below the sealant's surface to avoid whipping in air. (3) Transfer the contents of the pigment can into the mixed Part A and Part B. Use a spatula or knife, removing the entire con tents to ensure consistent color. (4) Continue mixing with a slow speed drill and slotted paddle until color is uniform. During the process, the sides and bottom of the base can and the paddle itself several times.

3. 3.0 gallon (11.37 L) unit: Use 2 Part B and 2 pigment container for each Part A container. Mix as instructed under 1-1/2 gallon (5.69 L) unit.

4. Pot life of the sealant is dependent upon temperature.

3.4.5 Application

1. All caulking and sealing be should be performed when temperatures are above 40°F (+4°C) any moisture or frost on surfaces will adversely affect adhesion.

2. Ideally, the temperature at the times of application should be the median of temperature extremes when the joint width opening is at its midpoint.

3. Fill joints from the bottom; avoid bridging of the joint, which mat form air voids.

4. For large joints, the self-leveling grade may be poured directly form the can.

5. For smaller joints and for all slope-grade applications, fill the joint by flowing the sealant from a bulk-loading gun.

6. Light tooling of the sealant is recommended to smooth out ripples. On sloped surfaces, tool from lowest point to highest.

3.4.6 Clean Up

1. Immediately after use and before sealant has cured clean equipment with Reducer 990, toluene, or kylene.

3.4.7 Curing

1. The cured sealant may be removed by cutting with a sharp-edged tool thin films by abrading.

2. Protect joint from dirt and traffic overnight. Time for initial cure will vary with humidity and temperature.

3.5 BACKER ROD

Closed-Cell Backer-Rod must be compressed in the joint at the time of installation. For joint widths up to 3/4" (19.1 mm), the diameter of the rod should be 1/8" (3.18 mm) larger than the width of the joint. For 3/4" (19.1 mm) wide joints use 1" (25.4 mm) diameter rod.

Closed-Cell Backer-Rod may be easily installed with a blunt probe or a plain-faced roller to force the rod to the desired depth. A template or roller gauge may be used to control the depth at which the rod is placed. Do not puncture, fold, or crease backer-rod. Follow sealant manufacture's suggestions for joint sealant width and depth ratio.

3.6 POOL EXPANSION JOINT SEALANT

3.6.1 Joint Preparation

1. The number of joints and joint width should be designed for a maximum of ±25% movement.

2. In joints of 1/4" to 1/2" (6.4 - 12.7 mm), the sealant depth at midpoint should be 1/4" (6.4)mm). In joints of 1/2" to 1" (12.7 - 25.4 mm), the depth at midpoint should be 1/4" to 1/2" (6.4 to 12.7 mm).

3. In deep joints, the sealant depth must be controlled by Closed-Cell Backer-Rod or Soft Backer-Rod. Where the joint depth does not permit the use of Backer-Rod, a bondbreaker (polyethylene strip) must be used to prevent three-point bonding.

4. To maintain the recommended sealant depth, install Backer-Rod by compressing and rolling it into the joint channel without stretching it lengthwise. Closed Cell Backer-Rod should be about 1/8" larger in diameter than the width of the joint to allow for compression. Soft Backer-Rod should be approximately 25% larger in diameter than the joint width. Backer-Rod becomes an integral

part of the joint. The sealant does not adhere to it, and no separation bondbreaker is required. Do not prime or puncture the backer-rod.

3.6.2 Surface Preparation

1. Surface to receive sealant must be structurally sound, dry, clean, free of dirt, moisture, loose particles, oil, grease, asphalt, tar, paint, wax, rust, waterproofings, curing, and parting compounds, membrane material, and other contaminants.

3.6.3 Priming

1. Priming is required for all substrates, including masonry, glass, and metal.

2. Full strength primers are applied with a brush (or clean cloth with Primer 757 for metal and glass). A light uniform coating is sufficient for most surfaces; somewhat heavier but not excessive coat.

3. Depending on temperature and humidity, primer will be tack-free in 15-30 minutes and ready for sealant. Priming and sealing must be done on the same work day.

4. Primer 759 may slightly darken light-colored masonry and concrete; where appearance is important, prevent excess material from being applied outside of joints.

3.6.4 Mixing

1. Two-Part Polysulfide is a two-component system and must be thoroughly mixed before use. Do not open containers until ready for use. The oversize Part A container allows for the addition and mixing of Part B and the color pigment.

2. Transfer the Part B to the Part A container using a spatula or knife. It is imperative that the entire contents of Part B be mixed thoroughly with the entire contents of Part A.

3. With a slow speed drill and a slotted mixing paddle, mix Part B and Part A 4 to 6 minutes. The paddle blade must be kept below the sealant's surface to avoid whipping air into the sealant.

4. Transfer the entire contents of the pigment can into the mixed Part A and Part B. Scrape out entire contents of color package with a spatula or knife to ensure consistent color. Continue mixing with a slow speed drill and slotted paddle until color is uniform. During the process, the sides and bottom of the base container and the paddle itself must be scraped several times.

5. The pot life of mixed Two-Part Polysulfide is about 6 hours at 65°F (18°C) and 1 hour at 95°F (35°C).

3.6.5 Application

1. Two-Part Polysulfide is applied by professional bulk caulking gun loaded at the job site. Joints should be filled from bottom to top by holding a properly sized nozzle against the bottom of the joint.

2. Best results are obtained if the sealant is applied when the joint is at the midpoint of its designed expansion-contraction range, providing for optimum sealant efficiency with subsequent joint movement.

3. Field experience recommends that the caulking and sealing be performed when temperatures are above 40°F (+4°C) to avoid application to damp surfaces. Moisture will adversely affect adhesion.

4. Application may proceed as low as 20 °F (-6°C) provided that substrates are completely dry, free of moisture, and clean as previously describes.

5. For best gunablity, sealant temperatures should be in the 60°F to 80°F (15°C to 27°C) range.

3.6.6 Clean Up

1. After using Sonneborn sealant primers or Two-Part Polysulfide, clean tools and equipment with Reducer 990, toluene, or similar solvent.

3.6.7 Curing

1. Initial cure within 24 hours, Complete cure in approximately 7 days. Cure times depend on temperature and humidity. Tack free time is reduced by tooling with warm water.

3.7 PROTECTION

Protection: Protect all areas adjacent to joints from sealant smears. Masking tape may be used for this purpose if removed 5 to 10 minutes after the joint is filled.

Cleaning: Immediately scrape off fresh sealant that has been smeared on masonry and rub clean with a solvent as recommended by the sealant manufacturer. Upon completion of application, remove all remaining smears and stains resulting therefrom and leave the Work in a clean and neat condition.

-- End of Section --

SECTION 08000

DOOR SCHEDULE

PART 1 GENERAL

1.1 WORK INCLUDED

Furnish and install doors and door frames in accordance with the Drawings Specifications, and as Scheduled herein.

Refer to Specifications Sections in Division 8 - DOORS AND WINDOWS for material and installation requirements.

1.2 RELATED WORK

Examine Contract Documents for requirements that affect work of this Section. Other Specification Sections that directly relate to work of this Section include, but are not limited to:

1. Section 08110, STEEL DOORS AND FRAMES.
2. Section 08120, STAINLESS STEEL DOORS AND FRAMES.
3. Section 08210, WOOD DOORS.
4. Section 08212, STILE AND RAIL WOOD DOORS
5. Section 08330, OVERHEAD ROLLING DOORS.
6. Section 08331, METAL ROLLING COUNTER DOORS.
7. Section 08353, OPERABLE PARTITIONS.
8. Section 08700, BUILDERS' HARDWARE.
9. Section 10605, WIRE MESH PARTITIONS.

1.3 HARDWARE SETS

Refer to Section 08700, BUILDERS' HARDWARE for description of each hardware set listed for steel and wood doors.

1.4 DOOR AND FRAME SCHEDULES

The DOOR AND FRAME SCHEDULES applicable to this Project immediately follows this Section.

PART 2 PRODUCTS

Not Used.

PART 3 EXECUTION

Not Used.

-- End of Section --

		LOCATION	OPNG.	FRAME					DOOR		HARDWARE			DETAILS			REMARKS
Door	Room	Room Name	Label			Width	Hgt.	Spcl.			Lock	Thr.	Set				
Lab.	No.	From / To	(Min.)	Mat'l	Type	(Inches)	(Inch.)	Prep.	Mat'l	Type	Y	No.	No.	Head	Jamb	Sill	
Ref Drawing: Refer to Architectural Drawings																	
				Refer to Master Materials List on Drawing A1.00 - 81.1a1=steel, 81.1a2 or 81.2b=stainless steel	Refer to Drawing A8.02	Inside Frame Width in Inches or Clear Opg. Dimension for Door	Inside Frame Height in Inches or Clear Opg. Dimension for Door	*MHO-Magnetic Hold Open	Refer to Master Materials List on Drawing A1.00 - 81.1b1=steel, 81.1b2 or 81.2a=stainless steel	Refer to Drawing A8.02	Y=Yes	Refer to Drawing A8.02	Refer to Section 08710 in Specification	Refer to Drawing A8.01 or Detail Reference Given	Refer to Drawing A8.01 or Detail Reference Given	Refer to Drawing A8.01 or Detail Reference Given	Refer to Remarks List Located After Door Schedule

		LOCATION	OPG.	FRAME					DOOR		HARDWARE			DETAILS			REMARKS
Door	Room	Room Name	Label			Width	Hgt.	Spcl.			Lock	Thr.	Set				
Lab.	No.	From / To	(Min.)	Mat'l	Type	(Inches)	(Inch.)	Prep.	Mat'l	Type	Y/N	No.	No.	Head	Jamb	Sill	
Ref Drawing: A1.0YS																	
A	Y002	Stair #6/Corridor	90	81.1a1	2	72"	88"	MHO	81.1b1	NN		T.02	5	1	2		
A	Y003	Domestic Hot Water/Corridor		81.1a1	2	72"	88"		81.1b1	FF	y	T.01	60	1	2		
A	Y004	Men's/Corridor		81.1a1	1	36"	88"		81.1b1	F	y	T.02	40	1	2		
A	Y005	Women's/Corridor		81.1a1	1	36"	88"		81.1b1	F	y	T.02	40	1	2		
A	Y006	Vestibule/Corridor	90	81.1a1	1	36"	88"		81.1b1	F	y	T.01	37	1	2		
A	Y008	Electrical/Corridor		81.1a1	1	36"	88"		81.1b1	F	y	T.01	38	1	2		
A	Y009	Janitor/Corridor		81.1a1	1	36"	88"		81.1b1	F	y	T.01	39	1	2		
A	Y010	DPE Equip./Corridor		81.1a1	2	72"	88"		81.1b1	HG2	y	T.01	62	1	2		See Note 16
B	Y010	DPE Equip./Corridor		81.1a1	1	36"	88"		81.1b1	HG	y	T.01	47	1	2		See Note 16
C	Y010	DPE Equip./Corridor	20	/	/	64"	54"		83c	OH4		/	72	1/A9.24	3/A9.24	1/A9.24	See Notes 4 & 5
D	Y010	DPE Equip./Corridor		81.2b	*	15"	15"		81.2a	*	y	/	62B	*	*		*See 8 & 9/A9.24
A	Y012	Janitor/DPE Equip.		81.1a1	1	36"	88"		81.1b1	F	y	T.01	39	1	2		
A	Y013	Office/DPE Equip.		81.1a1	1	36"	88"		81.1b1	FG	y	T.03	43	1	2		
A	Y014	Kitchen/DPE Equip.		81.1a1	1	36"	88"		81.1b1	HG	y	T.03	43	1	2		
A	Y020	CS Equipment/Corridor	20	81.1a1	2	72"	80"	MHO	81.1b1	DD	y	T.01	62A	1	2		See Note 16
B	Y020	CS Equipment/Corridor	20	/	/	118"	96"		83b	OH3		/	72	2/A9.24	4/A9.24	2/A9.24	See Notes 3 & 6
C	Y020	CS Equipment/Corridor		81.2b	*	15"	15"		81.2a	*	y	/	62B	*	*		*See 8 & 9/A9.24
D	Y020	CS Equipment/Corridor		81.2b	*	15"	15"		81.2a	*	y	/	62B	*	*		*See 8 & 9/A9.24
A	Y023	Office/CS Equipment		81.1a1	1	36"	88"		81.1b1	FG	y	T.03	63	1	2		
A	Y024	Sewing/CS Equipment		81.1a1	1	36"	88"		81.1b1	FG	y	T.03	63	1	2		
A	Y026	Laundry/CS Equipment		81.1a1	2	72"	88"		81.1b1	HG2	y	T.01	62	1	2		
A	Y027	Dryer/Laundry		81.1a1	1	36"	88"		81.1b1	F	y	T.01	39	1	2		
A	Y028	Sump Pump/CS Equipment		81.1a1	2	72"	88"		81.1b1	FF	y	T.01	51	1	2		
A	Y030	Tel. Data #2/Corridor		81.1a1	1	36"	88"		81.1b1	F	y	T.01	37	1	2		
Ref Drawing: A1.1YS																	
A	Y102	Stair #6/Corridor	90	81.1a1	8	36"	96"	MHO	81.1b1	N	n	T.01	23	1	11		
B	Y102	Stair #6/Corridor	90	81.1a1	7	72"	96"	MHO	81.1b1	NN	n	T.01	16	1	11		
C	Y102	Stair #6/Corridor	90	81.1a1	8	36"	96"	MHO	81.1b1	N	n	T.01	23	1	11		
A	Y103	Entry/Lobby		81.1a1	2	72"	96"		81.1b1	FG2	n	T.01	30	1	2		
B	Y103	Entry/Lobby		81.1a1	2	72"	96"		81.1b1	FG2	n	T.01	30	1	2		
C	Y103	Entry/Exterior		81.1a1	2	72"	96"		81.1b1	*FG2	y	/	1	10/A4.61	5/A4.58	7/A4.58	*Glass Type 11
D	Y103	Entry/Exterior		81.1a1	2	72"	96"		81.1b1	*FG2	y	/	1	10/A4.61	5/A4.58	7/A4.58	*Glass Type 11
A	Y104	South Lobby/Building A	90	/	/	71"	128"		83b	OH2	n	/	72	8/A8.03	7/A8.03		See Note 2
A	Y108	Electrical & Emer. Electrical/Corridor		81.1a1	1	36"	96"		81.1b1	F	y	T.02	42	1	2		
A	Y109	Janitor/Electrical & Emer. Electrical		81.1a1	1	36"	96"		81.1b1	F	y	T.02	39	1	2		
A	Y110	Service Corridor/Corridor		81.1a1	2	72"	96"		81.1b1	NN	n	T.02	5	1	2		
A	Y111	Emergency Generator Room/Service Corridor	90	81.1a1	1	36"	96"		81.1b1	F	y	T.01	38	1	2		
A	Y112	Emergency Electrical/Service Corridor	90	81.1a1	1	36"	96"		81.1b1	F	y	T.01	38	1	2		
A	Y113	Electrical/Service Corridor	90	81.1a1	1	36"	96"		81.1b1	F	n	T.01	26	1	2		
B	Y113	Electrical/Service Corridor	90	81.1a1	2	72"	96"		81.1b1	FF	n	T.01	25	1	2		
A	Y114	DPE Corridor/Service Corridor		81.1a1	2	72"	96"		81.1b1	FG2		T.03	24	5	6		

		LOCATION	OPG.	FRAME					DOOR		HARDWARE			DETAILS			REMARKS
Door	Room	Room Name	Label			Width	Hgt.	Spcl.			Lock	Thr.	Set				
Lab.	No.	From / To	(Min.)	Mat'l	Type	(Inches)	(Inch.)	Prep.	Mat'l	Type	Y/N	No.	No.	Head	Jamb	Sill	
B	Y114	DPE Corridor/Reconditioning Room		81.1a1	2	72"	96"		81.1b1	FG2	y	T.08	62	5	6		
A	Y117	Trainer Office/DPE Corridor		81.1a1	1	36"	96"		81.1b1	FG	y	T.03	43	5	6		
A	Y118	Unisex Toilet/DPE Corridor		81.1a1	1	36"	96"		81.1b1	F	y	T.07	50	5	6		
A	Y119	PT Corridor/Corridor		81.1a1	2	72"	96"		81.1b1	FG2	y	T.07	24	5	6		
B	Y119	PT Corridor/Reconditioning Room		81.1a1	2	72"	96"		81.1b1	FG2	y	T.08	62	5	6		
A	Y125	Trainer Office/PT Rehab		81.1a1	4	36"	96"		81.1b1	F	y	T.03	43	5	6		
A	Y126	Storage/PT Rehab		81.1a1	1	36"	96"		81.1b1	F	y	T.03	34	5	6		
A	Y130	Tel. Data/Corridor		81.1a1	1	36"	96"		81.1b1	F	y	T.02	37	5	6		
A	Y131	Reconditioning Room/Service Corridor		81.1a1	2	72"	96"		81.1b1	FG2		T.04	24	5	6		
A	Y134	DPE Storage/DPE Corridor		81.1a1	1	36"	96"		81.1b1	F	y	T.01	39	5	6		
A	Y136	Sound Closet/Vestibule		81.1a1	1	36"	96"		81.1b1	F	y	T.03	42	5	6		See Note 17
A	Y138	DIA Corridor/Vestibule		81.1a1	1	36"	96"		81.1b1	F	y		47	5	6		
A	Y140	Change Room/DIA Corridor		81.1a1	1	36"	96"		81.1b1	F	y		50	5	6		
A	Y142	Office/DIA Corridor		81.1a1	3	36"	96"		81.1b1	F	y	T.03	63	5	6		
A	Y143	Change Room/DIA Corridor		81.1a1	1	36"	96"		81.1b1	F	y		50	5	6		
A	Y144	Office/DIA Corridor		81.1a1	3	36"	96"		81.1b1	F	y	T.03	63	5	6		
A	Y146	Office/DIA Corridor		81.1a1	3	36"	96"		81.1b1	F	y	T.03	63	5	6		
A	Y147	Hydrotherapy/DIA Corridor		81.1a1	14	72"	96"		81.1b1	FG2	y		62	5	6		
B	Y147	Hydrotherapy/Storage		81.1a1	1	36"	96"		81.1b1	F	y		63	5	6		
A	Y148	DIA Rehab/Reconditioning Room		81.1a1	1	36"	96"		81.1b1	FG	y	T.08	47	5	6		
A	Y149	DIA Taping/Service Corridor		81.1a1	2	72"	96"		81.1b1	FG2		T.03	24	5	6		
B	Y149	DIA Taping/Reconditioning Room		81.1a1	3	36"	96"		81.1b1	F	y	T.08	47	5	6		
A	Y170	Pool Mech/Corridor		81.1a1	1	36"	96"		81.1b1	F	y		37	1	2		
Ref Drawing: A1.2YS																	
A	Y202	Stair #6/Corridor	90	81.1a1	2	72"	96"	MHO	81.1b1	NN	n	T.01	17	1	2		
A	Y203	Tel. Data/Corridor		81.1a1	1	36"	96"		81.1b1	F	y	T.02	39	1	2		
A	Y204	Men's/Corridor		81.1a1	1	36"	96"		81.1b1	F	y	T.05	40	1	2		
A	Y205	Women's/Corridor		81.1a1	1	36"	96"		81.1b1	F	y	T.05	40	1	2		
A	Y206	Corridor/Corridor		81.1a1	2	72"	96"		81.1b1	FG2	n	T.02	24	1	2		
B	Y206	Corridor/Roof		81.1a1	1	36"	80"		81.1b1	F	y	/	44	3	4	14 sim	See Note 7
A	Y207	Emer. Electric/Corridor		81.1a1	2	60"	96"		81.1b1	FF	y	T.02	41	1	7		
A	Y208	Electric/Corridor		81.1a1	1	36"	96"		81.1b1	F	y	T.02	38	1	2		
A	Y209	Janitor/Corridor		81.1a1	1	36"	96"		81.1b1	F	y	T.02	39	1	2		
A	Y219	Stair #1/Corridor	90	81.1a1	2	72"	96"		81.1b1	NN	n	T.01	5	1	2		
A	Y220	Hayes Storage/Corridor		81.1a1	2	72"	96"		81.1b1	FF	y	T.02	60	5	6		
B	Y220	Hayes Storage/Corridor		81.1a1	2	72"	96"		81.1b1	FF	y	T.02	60	5	6		
C	Y220	Hayes Storage/Corridor		81.1a1	2	72"	96"		81.1b1	FF	y	T.02	60	5	6		
A	Y221	Intramural Wrestling/Corridor		81.1a1	2	72"	96"		81.1b1	FG2		T.01	24	5	6		
B	Y221	Intramural Wrestling/Hayes Storage		81.1a1	2	72"	96"		81.1b1	FF	y	T.01	60	5	6		
C	Y221	Intramural Wrestling/Intramural Wrestling		81.1a1	2	72"	96"		81.1b1	NN	n	T.01	31	5	6		See Note 8
A	Y222	Wrestling Storage/Intramural Wrestling		81.1a1	2	72"	96"		81.1b1	FF	y	T.01	41	5	6		See Note 8
A	Y223	Intramural Wrestling/Corridor		81.1a1	2	72"	96"		81.1b1	FG2		T.01	24	5	6		

		LOCATION	OPG.	FRAME					DOOR		HARDWARE			DETAILS			REMARKS
Door	Room	Room Name	Label			Width	Hgt.	Spcl.			Lock	Thr.	Set				
Lab.	No.	From / To	(Min.)	Mat'l	Type	(Inches)	(Inch.)	Prep.	Mat'l	Type	Y/N	No.	No.	Head	Jamb	Sill	
B	Y223	Intramural Wrestling/Intramural Wrestling		81.1a1	2	72"	96"		81.1b1	NN	n	T.01	31	5	6		See Note 8
A	Y224	Intramural Wrestling/Corridor		81.1a1	2	72"	96"		81.1b1	FG2		T.01	24	5	6		
A	Y225	Sound Closet/Intramural Wrestling		81.1a1	1	36"	96"		81.1b1	F	y	T.01	42	5	6		See Note 8
A	Y226	Wrestling Storage/Intramural Wrestling		81.1a1	2	72"	96"		81.1b1	FF	y	T.01	61	5	6		See Note 8
A	Y227	Sound Closet/Intramural Wrestling		81.1a1	1	36"	96"		81.1b1	F	y	T.01	42	5	6		See Note 8
A	Y228	Electric/Corridor		81.1a1	1	36"	96"		81.1b1	F	y	T.01	38	1	2		
A	Y229	Emer. Electric/Intramural Wrestling		81.1a1	2	48"	96"		81.1b1	FF	y	T.01	41	1	2		
A	Y230	Tel. Data #2/Corridor		81.1a1	1	36"	96"		81.1b1	F	y	T.02	37	5	6		
A	Y231	Tel. Data #1/Intramural Wrestling		81.1a1	1	36"	96"		81.1b1	F	y	T.01	37	5	6		
A	Y232	Stair #2/Intramural Wrestling	90	81.1a1	1	44"	96"		81.1b1	N	y	T.01	28A	5	6		
B	Y232	Stair #2/Vestibule	90	81.1a1	1	44"	96"		81.1b1	N		T.01	28	5	6		
A	Y234	Sound Closet/Intramural Wrestling		81.1a1	1	36"	96"		81.1b1	F		T.01	42	5	6		See Note 8
Ref Drawing: A1.3YS																	
A	Y301	Corridor/Roof		81.1a1	1	36"	80"		81.1b1	F	y	/	44	3	4	14 sim	See Note 7
A	Y302	Stair #6/Corridor	90	81.1a1	2	72"	96"	MHO	81.1b1	NN		T.02	17	1	2		
A	Y304	Men's/Corridor		81.1a1	1	36"	96"		81.1b1	F	y	T.02	40	1	2		
A	Y305	Women's/Corridor		81.1a1	1	36"	96"		81.1b1	F	y	T.02	40	1	2		
A	Y307	Emer. Electrical/Corridor		81.1a1	2	60"	96"		81.1b1	FF	y	T.01	41	1	7		
A	Y308	Electrical/Corridor		81.1a1	1	36"	96"		81.1b1	F	y	T.01	38	1	2		
A	Y309	Janitor/Corridor		81.1a1	1	36"	96"		81.1b1	F	y	T.01	39	1	2		
A	Y310	Corridor/Corridor		81.1a1	2	72"	96"		81.1b1	FG2	n	T.01	5	1	2		
A	Y319	Stair #1/Corridor	90	81.1a1	2	72"	96"		81.1b1	NN		T.01	5	1	2		
A	Y320	DPE Weights/Corridor		81.1a1	2	72"	96"		81.1b1	FG2		T.04	24	5	6		
B	Y320	DPE Weights/Corridor		81.1a1	2	72"	96"		81.1b1	FG2		T.04	24	5	6		
C	Y320	DPE Weights/Corridor		81.1a1	2	72"	96"		81.1b1	FG2		T.04	24	5	6		
A	Y321	Storage/DPE Weights		81.1a1	1	36"	96"		81.1b1	F	y	T.04	42	5	6		
A	Y322	Multi-Purpose #1/Corridor		81.1a1	1	36"	96"		81.1b1	F		T.09	45A	1	2		
B	Y322	Multi-Purpose #1/Corridor		81.1a1	1	36"	96"		81.1b1	FG		T.09	45A	1	2		
C	Y322	Multi-Purpose #1/Corridor		81.1a1	2	72"	96"		81.1b1	FG2		T.09	24	5	6		
A	Y323	Storage/Multi-Purpose #1		81.1a1	2	72"	96"		81.1b1	FF	y	T.09	61	5	6		
A	Y324	Storage/Multi-Purpose #1		81.1a1	2	72"	96"		81.1b1	FF	y	T.09	61	5	6		
A	Y325	Storage/Multi-Purpose #1		81.1a1	2	72"	96"		81.1b1	FF	y	T.09	61	5	6		
A	Y326	Storage/DPE Weights		81.1a1	2	72"	96"		81.1b1	FF	y	T.04	61	5	6		
A	Y327	Sound Closet/Multi-Purpose #1		81.1a1	1	36"	96"		81.1b1	F	y	T.09	39	5	6		See Note 17
A	Y328	Electric/Corridor		81.1a1	1	34"	96"		81.1b1	F	y	T.01	38	1	2		
A	Y329	Emer. Electric/Corridor		81.1a1	2	48"	96"		81.1b1	FF	y	T.01	41	1	2		
A	Y330	Tel. Data #2/Corridor		81.1a1	1	36"	96"		81.1b1	F	y	T.01	37	5	6		
A	Y331	Tel. Data #1/Corridor		81.1a1	1	36"	96"		81.1b1	F	y	T.01	39	5	6		
A	Y332	Stair #2/Corridor	90	81.1a1	1	44"	96"		81.1b1	N		T.01	33	5	6		
B	Y332	Stair #2/Corridor	90	81.1a1	1	44"	96"		81.1b1	N		T.01	33	5	6		
A	Y333	Sound Closet/DPE Weights		81.1a1	1	36"	96"		81.1b1	F	y	T.04	42	5	6		See Note 17

		LOCATION	OPG.	FRAME					DOOR		HARDWARE			DETAILS			REMARKS
Door	Room	Room Name	Label			Width	Hgt.	Spcl.			Lock	Thr.	Set				
Lab.	No.	From / To	(Min.)	Mat'l	Type	(Inches)	(Inch.)	Prep.	Mat'l	Type	Y/N	No.	No.	Head	Jamb	Sill	
Ref Drawing: A1.4YS																	
A	Y402	Stair #6/Corridor	90	81.1a1	2	72"	96"	MHO	81.1b1	NN		T.02	17	1	2		
A	Y404	Men's/Corridor		81.1a1	1	36"	96"		81.1b1	F	y	T.02	40	1	2		
A	Y405	Women's/Corridor		81.1a1	1	36"	96"		81.1b1	F	y	T.02	40	1	2		
A	Y406	Vestibule/Corridor		81.1a1	1	36"	96"		81.1b1	F		T.01	6	1	2		
B	Y406	Vestibule/Bldg. A	90	81.1a1	1	36"	96"		81.1b1	F		*	6	5	6	*	*See 8/A4.91
A	Y407	Emer. Electrical/Corridor		81.1a1	2	60"	96"		81.1b1	FF	y	T.01	41	5	7		
A	Y408	Electrical/Corridor		81.1a1	1	36"	96"		81.1b1	F	y	T.01	38	1	2		
A	Y409	Janitor/Corridor		81.1a1	1	36"	96"		81.1b1	F	y	T.01	39	1	2		
A	Y410	Racquetball Corridor/Corridor		81.1a1	2	72"	96"		81.1b1	FG2		T.09	24	1	2		
B	Y410	Racquetball Corridor/Boxing Corridor		81.1a	11	64"	96"		81.1b1	NN		T.09	83	5	6 Sim.		
A	Y419	Stair #1/Corridor	90	81.1a1	2	72"	96"		81.1b1	NN		T.01	5	5	6		
A	Y428	Electric/Corridor		81.1a1	1	36"	96"		81.1b1	F	y	T.01	38	5	6		
A	Y429	Emer. Electric/Corridor		81.1a1	2	60"	96"		81.1b1	FF	y	T.01	41	5	6		
A	Y430	Tel. Data #2/Corridor		81.1a1	1	36"	96"		81.1b1	F	y	T.01	37	5	6		
A	Y431	Tel. Data #1/Corridor		81.1a1	1	36"	96"		81.1b1	F	y	T.01	37	5	6		
A	Y432	Stair #2/Corridor	90	81.1a1	1	44"	96"		81.1b1	N		T.01	33	5	6		
B	Y432	Stair #2/Gymnasium	90	81.1a1	1	44"	96"		81.1b1	N	y	T.09	46	5	6		
A	Y435	Boxing/Corridor		81.1a1	2	72"	96"		81.1b1	FG2	y		24	5	6		
B	Y435	Boxing/Corridor		81.1a1	2	72"	96"		81.1b1	FG2	y		24	5	6		
A	Y436	Boxing/Corridor		81.1a1	2	72"	96"		81.1b1	FG2	y		24	5	6		
B	Y436	Boxing/Corridor		81.1a1	2	72"	96"		81.1b1	FG2	y		24	5	6		
A	Y437	Sound Closet/Boxing		81.1a1	1	36"	96"		81.1b1	F	y		63	5	6		
A	Y438	Sound Closet/Boxing		81.1a1	1	36"	96"		81.1b1	F	y		63	5	6		
A	Y439	Storage/Boxing		81.1a1	2	72"	96"		81.1b1	*	y		61	5	6		*See Note 11
A	Y440	Racquetball Storage/Corridor		81.1a1	1	36"	96"		81,1b1	F	y		39				
A	Y442	Gym Storage/CS Gymnasium	20	81.1a1	2	72"	96"		81.1b1	FF	y	T.09	61	5	6		
A	Y444	Storage/Boxing		81.1a1	2	72"	96"		81.1b1	*	y		61	5	6		*See Note 11
Ref Drawing: A1.5YS																	
A	Y519	Stair #1		81.1a1	1	36"	96"		81.1b1	N	y	T.01	34	5	6		
B	Y519	Stair #1/Exterior Bridge #1		81.1a1	2	72"	96"		81.1b1	E2	y	/	1A	3	1/A4.48	*	*See 5/A4.48 Sim.
C	Y519	Stair #1/Boxing Balcony	90	81.1a1	1	36"	96"		81.1b1	N	y		6	5	6		
A	Y522	Boxing Office/Boxing Balcony		81.1a1	1	36"	96"		81.1b1	HG	y		43	5	6		
A	Y524	Boxing Balcony/Boxing Balcony		81.1a1	2	72"	96"		81.1b1	FG2			18	5	6		
A	Y532	Stair #2/Exterior Bridge #2		81.1a1	12	72"	96"		81.1b1	E2		/	1A/1A	3	1/A4.48	*	*See 5/A4.48 Sim.; See Note 9
B	Y532	Stair #2/Boxing Balcony	90	81.1a1	1	36"	96"		81.1b1	N			6	5	6		
Ref Drawing: A1.6YS																	
A	Y619	Stair #1/Vestibule	90	81.1a1	2	72"	96"		81.1b1	NN		T.01	5	5	6		
A	Y620	Vestibule/South Mechanical Room		81.1a1	2	72"	96"		81.1b1	NN	y	T.10	51	5	6	*	See Note 18
B	Y620	Vestibule/Plenum		81.1a1	1	36"	80"		81.1b1	F	y	/	44	5	6	14 sim.	See Note 7
A	Y621	Electric Room/South Mechanical Room		81.1a1	1	36"	96"		81.1b1	F	y	T.10	38	5	6	*	See Note 18
A	Y622	Exhaust Plenum/South Mechanical Room		81.1a1	1	36"	80"		81.1b1	F	y	/	44	5	6	14 sim.	See Note 7

		LOCATION	OPG.	FRAME					DOOR		HARDWARE			DETAILS			REMARKS
Door	Room	Room Name	Label			Width	Hgt.	Spcl.			Lock	Thr.	Set				
Lab.	No.	From / To	(Min.)	Mat'l	Type	(Inches)	(Inch.)	Prep.	Mat'l	Type	Y/N	No.	No.	Head	Jamb	Sill	
B	Y622	Exhaust Plenum/Roof		81.1a1	1	36"	80"		81.1b1	F	y	/	44	15	16	14	See Note 7

		LOCATION	OPG.	FRAME					DOOR		HARDWARE			DETAILS			REMARKS
Door	Room	Room Name	Label			Width	Hgt.	Spcl.			Lock	Thr.	Set				
Lab.	No.	From / To	(Min.)	Mat'l	Type	(Inches)	(Inch.)	Prep.	Mat'l	Type	Y/N	No.	No.	Head	Jamb	Sill	
Ref Drawing: A1.0YN																	
A	Y001	Corridor/Bldg. A	90	81.1a1	2	72"	88"		81.1b1	FF		T.11	24	1	2		
A	Y031	Pool Equipment/Corridor		81.2b	2	72"	88"		81.2a	FF	y	T.01	60	1	2		
B	Y031	Pool Equipment/Pit				36"	*		55c	*		/	80	/	*		*See 5 & 6/A8.03
A	Y040	Instructional Pool/Corridor	20	81.2b	1	36"	88"		81.2a	FG	y	T.02	45A	1	2		
B	Y040	Instructional Pool/Corridor	20	81.2b	1	36"	88"		81.2a	FG	y	T.02	45A	1	2		
C	Y040	Instructional Pool/Corridor	20	81.2b	2	72"	88"		81.2a	FG2	y	T.02	24	1	2		
A	Y042	Deck Office/Instructional Pool	20	81.2b	1	36"	88"		81.2a	FG	y	T.01	67	1	2		
A	Y044	DPE Storage/Instructional Pool	20	81.2b	2	60"	88"		81.2a	FF	y	T.02	74	1	2		
B	Y044	DPE Storage/Corridor		81.1a1	2	72"	88"		81.1b1	FF	y	T.01	60	1	2		
A	Y045	Chemical Storage/Pool Equipment	90	81.2b	1	36"	88"		81.2a	F	y	T.01	39	1	2		
B	Y045	Chemical Storage/Instructional Pool	90	81.2b	1	36"	88"		81.2a	F	y	T.02	45	1	2		
A	Y046	Sound Closet/Deck Office		81.1a1	1	36"	80"		81.1b1	F	y	T.02	42	1	2		See Note 17
A	Y047	Operations Office/Corridor		81.1a1	1	36"	88"		81.1b1	F	y	T.03	43	1	2		
A	Y050	Corridor/Corridor	20	81.1a1	11	72"	88"		81.1b1	FF	n	T.02	18A	12	13		
A	Y051	Tel. Data #3/Corridor	20	81.1a1	1	36"	88"		81.1b1	F	y	T.02	37	1	2		
A	Y059	Stair #3/Corridor	90	81.1a1	1	36"	88"		81.1b1	N	n	T.01	33	1	2		
A	Y060	Corridor/Corridor	20	81.1a1	7	96"	88"	MHO	81.1b1	FF	n	T.02	16A	5	6		*See 7/A9.26
B	Y060	Corridor/Corridor		81.1a1	7*	96"	88"		*	*		*	*	*	*		*See 7/A9.26 - Cased Opening
C	Y060	Corridor/Trophy Case		81.1a1	1	36"	76"		81.1b1	F	y		16B	5	6		*See 7/A9.26
D	Y060	Corridor/Trophy Case		81.1a1	1	36"	76"		81.1b1	F	y		16B	5	6		*See 7/A9.26
Ref Drawing: A1.1YN																	
A	Y123	Trainer Office/Reception Waiting		81.1a1	3	36"	96"		81.1b1	F	y	T.03	43	5	6		
A	Y124	Trainer Office/Reception Waiting		81.1a1	3	36"	96"		81.1b1	F	y	T.03	43	5	6		
B	Y124	Trainer Office/Vestibule		81.1a1	1	36"	96"		81.1b1	F	y	T.03	43	5	6		
A	Y139	Corridor/Corridor		81.1a1	1	36"	96"		81.1b1	F	y			1	2		
A	Y141	Office/DIA Corridor		81.1a1	1	36"	96"		81.1b1	F	y		43	5	6		
A	Y150	Corridor/Service Corridor	20	81.1a1	2	72"	96"		81.1b1	FF		T.02	5	1	2		
A	Y151	Tel. Data #3/Corridor	20	81.1a1	1	36"	96"		81.1b1	F	y	T.02	37	1	2		
A	Y159	Corridor/Service Corridor		81.1a1	1	36"	96"		81.1b1	F				1	2		
A	Y159	Stair #3/Corridor	90	81.1a1	1	36"	96"		81.1b1	N		T.02	33	1	2		
A	Y160	Bike Storage/Corridor	20	81.1a1	1	36"	96"		81.1b1	F	y		47	1	2		
B	Y160	Bike Storage/Corridor	20	81.1a1	1	36"	96"		81.1b1	F	y		47	1	2		
A	Y161	Mechanical/Corridor	90	81.1a1	2	72"	96"		81.1b1	FF	y	T.02	51	1	2		
A	Y162	Shop/Corridor		81.1a1	2	72"	96"		81.1b1	FF	y		71	1	2		
A	Y163	Break/Corridor		81.1a1	1	36"	96"		81.1b1	F	y		56	1	2		
A	Y164	General Storage/Corridor		81.1a1	2	72"	96"		81.1b1	FF	y		51	1	2		
A	Y165	Toilet/Break		81.1a1	1	36"	96"		81.1b1	F	y		50	1	2		
A	Y166	DFP Storage/Corridor		81.1a1	2	72"	96"		81.1b1	FF	y		51	1	2		
A	Y167	Office/Break		81.1a1	3	36"	96"		81.1b1	F	y		56	1	2		
A	Y168	Storage/Corridor		81.1a1	2	72"	96"		81.1b1	FF	y		51	1	2		
A	Y180	Corridor/Corridor	20	81.1a1	7	96"	96"	MHO	81.1b1	FF		T.01	16A	5	6		*See 7/A9.26

		LOCATION	OPG.	FRAME					DOOR		HARDWARE			DETAILS			REMARKS
Door	Room	Room Name	Label			Width	Hgt.	Spcl.			Lock	Thr.	Set				
Lab.	No.	From / To	(Min.)	Mat'l	Type	(Inches)	(Inch.)	Prep.	Mat'l	Type	Y/N	No.	No.	Head	Jamb	Sill	
B	Y180	Corridor/Corridor		81.1a1	7*	96"	88"		*	*		*	*	*	*		*See 7/A9.26 - Cased Opening
C	Y180	Corridor/Trophy Case		81.1a1	1	36"	84"		81.1b1	F	y		16B	5	6		*See 7/A9.26
D	Y180	Corridor/Trophy Case		81.1a1	1	36"	84"		81.1b1	F	y		16B	5	6		*See 7/A9.26
Ref Drawing: A1.2YN																	
A	Y233	Vestibule/Gymnasium	20	81.1a1	1	48"	96"		81.1b1	N		T.09	28	5*	6*	*	*See A4.57
A	Y240	Gymnasium/Corridor	20	81.1a1	2	72"	96"		81.1b1	FG2		T.09	24	5*	6*	*	*See A4.57
B	Y240	Gymnasium/Corridor	20	81.1a1	2	72"	96"		81.1b1	FG2		T.09	24	5*	6*	*	*See A4.57
C	Y240	Gymnasium/Corridor	20	81.1a1	5	2@48"	96"		81.1b1	FG\FG		T.09	45A/45A	5	6		*See Note 10
D	Y240	Gymnasium/Corridor	20	81.1a1	5	2@48"	96"		81.1b1	FG\FG		T.09	45A/45A	5	6		*See Note 10
A	Y241	Janitor/Gymnasium	20	81.1a1	1	36"	96"		81.1b1	F	y	T.09	39	5*	6*	*	*See A4.57
B	Y241	Janitor/Vestibule		81.1a1	1	36"	96"		81.1b1	F	y	T.01	39	5	6		
A	Y242	Gym Storage/Gymnasium		81.1a1	1	36"	96"		81.1b1	F	y	T.09	42	5*	6*	*	*See A4.57
A	Y243	Wrestling Storage/Intramural Wrestling		81.1a1	2	72"	96"		81.1b1	FF	y	T.01	41	5	6		
A	Y244	Gym Storage/Gymnasium	20	81.1a1	2	72"	96"		81.1b1	FF	y	T.09	61	5*	6*	*	*See A4.57
B	Y244	Gym Storage/Gymnasium	20	81.1a1	2	72"	96"		81.1b1	FF	y	T.09	61	5*	6*	*	*See A4.57
A	Y245	CRD Office/Gymnasium	20	81.1a1	4	36"	96"		81.1b1	F	y	T.09	43	5*	6*	*	*See A4.57
B	Y245	CRD Office/CRD Equip.		81.1a1	1	36"	96"		81.1b1	F	y	T.01	63	5	6		
A	Y246	CRD Equip./Gymnasium	20	81.1a1	1	36"	96"		81.1b1	D	y	T.09	54A	5*	6*	*	*See A4.57
A	Y247	Sound Closet/Gymnasium	20	81.1a1	1	36"	96"		81.1b1	F	y	T.09	39	5*	6*	*	*See A4.57;See Note 17
A	Y251	Tel. Data #3/Corridor	20	81.1a1	1	36"	96"		81.1b1	F	y	T.02	37	5	6		
A	Y253	Storage/Corridor		81.1a1	1	36"	96"		81.1b1	F	y	T.02	39	1	2		
B	Y253	Storage/Corridor		81.1a1	2	72"	96"		81.1b1	FF	y	T.02	51	1	2		
A	Y254	Storage/Corridor	20	81.1a1	2	72"	96"		81.1b1	FF	y		51	1	2		
A	Y259	Stair #3/Corridor	90	81.1a1	2	72"	96"		81.1b1	NN	n	T.01	5	5	6		
A	Y260	Corridor/Corridor	20	81.1a1	7	96"	96"	MHO	81.1b1	FF		T.01	16A	5	6		*See 7/A9.26
B	Y260	Corridor/Corridor		81.1a1	7*	96"	88"		*	*		*	*	*	*		*See 7/A9.26 - Cased Opening
C	Y260	Corridor/Trophy Case		81.1a1	1	36"	84"		81.1b1	F	y		16B	5	6		*See 7/A9.26
D	Y260	Corridor/Trophy Case		81.1a1	1	36"	84"		81.1b1	F	y		16B	5	6		*See 7/A9.26
Ref Drawing: A1.3YN																	
A	Y334	Corridor/Corridor		81.1a1	2	72"	96"		81.1b1	FG2	n	T.01	5	5	6		
A	Y335	Storage/Corridor		81.1a1	2	72"	96"		81.1b1	FF	y	T.01	60	5	6		
A	Y351	Tel. Data #3/Corridor	20	81.1a1	1	36"	96"		81.1b1	F	y	T.02	37	5	6		
A	Y354	General Storage/Corridor		81.1a1	2	72"	96"		81.1b1	FF	y		51	1	2		
A	Y357	General Storage/Corridor		81.1a1	2	72"	96"		81.1b1	FF	y	T.02	41	1	2		
A	Y359	Stair #3/Corridor	90	81.1a1	2	72"	96"		81.1b1	NN	n	T.01	5	1	2		
A	Y360	Corridor/Corridor	20	81.1a1	7	96"	96"	MHO	81.1b1	FF	n	T.02	16A	5	6		*See 7/A9.26
B	Y360	Corridor/Corridor		81.1a1	7*	96"	88"		*	*		*	*	*	*		*See 7/A9.26 - Cased Opening
C	Y360	Corridor/Trophy Case		81.1a1	1	36"	84"		81.1b1	F	y		16B	5	6		*See 7/A9.26
D	Y360	Corridor/Trophy Case		81.1a1	1	36"	84"		81.1b1	F	y		16B	5	6		*See 7/A9.26
Ref Drawing: A1.4YN																	
A	Y440	CS Gymnasium/Corridor	20	81.1a1	2	72"	96"		81.1b1	FG2	y	T.09	24	5*	6*	*	*See A4.57
B	Y440	CS Gymnasium/Corridor	20	81.1a1	2	72"	96"		81.1b1	FG2	y	T.09	24	5*	6*	*	*See A4.57

		LOCATION	OPG.	FRAME					DOOR		HARDWARE			DETAILS			REMARKS
Door	Room	Room Name	Label			Width	Hgt.	Spcl.			Lock	Thr.	Set				
Lab.	No.	From / To	(Min.)	Mat'l	Type	(Inches)	(Inch.)	Prep.	Mat'l	Type	Y/N	No.	No.	Head	Jamb	Sill	
C	Y440	CS Gymnasium/Corridor	20	81.1a1	5	2@48"	96"		81.1b1	FG/FG	y	T.09	45A/45A	5	6		*See Note 10
D	Y440	CS Gymnasium/Corridor	20	81.1a1	5	2@48"	96"		81.1b1	FG/FG	y	T.09	45A/45A	5	6		*See Note 10
E	Y440	CS Gymnasium/Corridor	20	81.1a1	1	48"	96"		81.1b1	N	y	T.09	45A	5*	6*	*	*See A4.57
A	Y441	Gym Storage/CS Gymnasium		81.1a1	1	36"	96"		81.1b1	F	y	T.09	42	5*	6*	*	*See A4.57
A	Y443	Sound Closet/CS Gymnasium		81.1a1	1	36"	96"		81.1b1	F	y	T.09	42	5*	6*	*	*See A4.57; See Note 17
A	Y451	Tel. Data #3/Corridor		81.1a1	1	36"	96"		81.1b1	F	y	/	37	1	2		
A	Y458	Entry/Corridor		81.1a1	1	36"	96"		81.1b1	FG	n	T.01	6	1	2		
B	Y458	Entry/Corridor		81.1a1	2	72"	96"		81.1b1	FG2	n	T.01	5	1	2		
C	Y458	Entry/Corridor		81.1a1	1	36"	96"		81.1b1	FG	n	T.01	6	1	2		
D	Y458	Entry/Exterior Bridge #3		81.1a1	1	36"	96"		81.1b1	FG	y	/	2	10/A4.61	*	5/A4.48	*See 1 & 3/A4.61 & Note 16
E	Y458	Entry/Exterior Bridge #3		81.1a1	2	72"	96"		81.1b1	FG2	y	/	1	10/A4.61	1/A4.61	5/A4.48	
F	Y458	Entry/Exterior Bridge #3		81.1a1	1	36"	96"		81.1b1	FG	y	/	2	10/A4.61	*	5/A4.48	*See 1 & 3/A4.61
A	Y459	Stair #3/Entry	90	81.1a1	2	72"	96"		81.1b1	NN		T.02	5	1	2		
B	Y459	Stair #3/Entry	90	81.1a1	1	36"	96"		81.1b1	N	y	T.02	29	1	2		
A	Y460	Corridor/Corridor	20	81.1a1	7	72"	96"	MHO	81.1b1	FF		T.02	16	12	11		
B	Y460	Corridor/Corridor	20	81.1a1	7	72"	96"	MHO	81.1b1	FF		T.02	16	12	11		
Ref Drawing: A1.5YN																	
A	Y559	Stair #3/Vestibule	90	81.1a1	1	36"	96"		81.1b1	N	y	T.01	29	1	2		
Ref Drawing: A1.6YN																	
A	Y651	Exhaust Plenum/Vestibule		81.1a1	1	36"	80"		81.1b1	F	y	/	48	5	6		
A	Y652	Exhaust Plenum/Vestibule		81.1a1	1	36"	80"		81.1b1	F	y	/	48	5	6		
A	Y653	Vestibule/South Mechanical Room	20	81.1a1	2	72"	80"		81.1b1	FF	y	/	79	5	6	*	*See Note 18
B	Y653	Vestibule/Bridge		81.1a1	2	72"	96"		81.1b1	F	y	T.01	48	5	6		
A	Y657	Corridor/Roof		81.1a1	1	36"	80"		81.1b1	F	y	/	44	15	16	*	*See 8a/A4.15
B	Y657	Corridor/Pump Room		81.1a1	1	36"	80"		81.1b1	F	n	T.01	48	5	6		
A	Y658	Pump Room/(Cooling Tower)		81.1a1	1	36"	80"		81.1b1	F	y	/	44	15 sim.	16 sim.	14 sim.	See Note 7
B	Y658	Pump Room/South Mechanical Room		81.1a1	1	36"	80"		81.1b1	F		/	48	5	6	*	*See Note 18
A	Y659	Stair #3/Corridor	90	81.1a1	1	36"	80"		81.1b1	N	y	T.01	29	5	6		

		LOCATION	OPG.	FRAME					DOOR		HARDWARE			DETAILS			REMARKS
Door	Room	Room Name	Label			Width	Hgt.	Spcl.			Lock	Thr.	Set				
Lab.	No.	From / To	(Min.)	Mat'l	Type	(Inches)	(Inch.)	Prep.	Mat'l	Type	Y/N	No.	No.	Head	Jamb	Sill	
Ref Drawing: A1.0ZE																	
A	Z001	Corridor/Corridor	90	81.1a1	11	72"	88"	MHO	81.1b1	FF		T.01	19	12	13		
B	Z001	Corridor/Corridor	90	81.1a1	2	72"	88"	MHO	81.1b1	NN		T.11	17	1	2		
A	Z002	Change Room/Day Lockers		81.1a1	1	36"	88"		81.1b1	F		T.01	50	1	2		
A	Z003	Change Room/Day Lockers		81.1a1	1	36"	88"		81.1b1	F		T.01	50	1	2		
A	Z004	Day Lockers/Corridor	90	81.1a1	1	36"	88"		81.1b1	F	y	/	47	1	2		
A	Z020	Intramural Pool/Corridor	20	81.2b	2	72"	88"		81.2a	HG2		T.05	64	1	2		
B	Z020	Intramural Pool/Corridor	90	81.2b	1	36"	88"		81.2a	F		T.05	65	1	2		
C	Z020	Intramural Pool/Corridor	20	81.2b	1	36"	88"		81.2a	HG		T.05	65	1	2		
A	Z021	Janitor/Intramural Pool		81.2b	1	36"	88"		81.2a	F	y	T.02	68	1	2		
A	Z022	Unisex Toilet/Intramural Pool		81.2b	1	36"	88"		81.2a	F	y	T.01	69	1	2		
A	Z024	Met.Class/Intramural Pool		81.2b	4	36"	88"		81.2a	FG	y	T.01	66	1	2		
A	Z025	DPE Pool Storage/Intramural Pool		81.2b	2	72"	88"		81.2a	FF	y	T.01	66	1	2		
A	Z026	Deck Office/Intramural Pool		81.2b	1	36"	88"		81.2a	FG	y	T.01	67	1	2		
A	Z028	Sound Closet/Deck Office		81.2b	1	32"	88"		81.2a	F	y	T.02	52	1	2		See Note 17
A	Z029	Sump Pit Room/DPE Pool Storage		81.2b	1	36"	88"		81.2a	F	y	T.02	42	1	2		
A	Z030	Pump Pit Room/Pool Storage		81.2b	1	36"	88"		81.2a	F	y	T.12	42	1	2		
A	Z032	Storage/Pool Storage		81.2b	2	72"	88"		81.2a	F	y		61	1	2		
A	Z053	Electrical/Corridor		81.1a1	1	36"	88"		81.1b1	F	y	T.02	38	1	2		
A	Z054	Emer. Electrical/Corridor		81.1a1	2	60"	88"		81.1b1	FF	y	T.02	41	1	2		
A	Z056	Electrical/Corridor	90	81.1a1	1	36"	88"		81.1b1	F	y	T.02	38	1	2		
A	Z070	Corridor/Bldg. A Lobby	90	81.1a1	1	36"	84"	MHO	81.1b1	F		T.11	6	1	2		
A	Z090	Vestibule/Corridor	90	81.1a1	2	72"	88"		81.1b1	FF		T.02	5	1	2		
A	Z091	Chemical Storage/Vestibule	60	81.1a1	2	72"	88"		81.1b1	FF	y		25	1	2		
Ref Drawing: A1.1ZE																	
A	Z101	Corridor/Corridor	90	81.1a1	7	72"	96"	MHO	81.1b1	FF		T.01	20	12	11		
A	Z102	Men's/Corridor		81.1a1	1	36"	96"		81.1b1	F	y	T.05	47	1	2		
A	Z103	Women's/Corridor		81.1a1	1	36"	96"		81.1b1	F	y	T.05	47	1	2		
A	Z105	General Storage/Corridor	90	81.1a1	1	44"	96"		81.1b1	F	y	T.02	39	5	6		
B	Z105	General Storage/Corridor	90	81.1a1	1	44"	96"		81.1b1	F	y	T.02	39	5	6		
C	Z105	General Storage/Corridor	90	81.1a1	1	44"	96"		81.1b1	F	y	T.02	39	5	6		
A	Z108	Janitor/Corridor	90	81.1a1	1	36"	96"		81.1b1	F	y	T.02	39	5	6		
A	Z109	Corridor/Elevator Lobby		81.1a1	2	72"	96"		81.1b1	NN			5	1	2		
B	Z109	Corridor/Unloading		81.1a1	2	72"	96"		81.1b1	NN			62	1	2		
A	Z110	Tel. Data #4/Corridor		81.1a1	1	36"	96"		81.1b1	F	y	T.01	37	1	2		
A	Z114	Stair #4/Unloading	90	81.1a1	1	36"	96"		81.1b1	N			45	1	2		
B	Z114	Stair #4/Exterior		81.1a1	6 Sim.	36"	96"		81.1b1	E1	y		3	3	4		
A	Z122	FOP's/Corridor	90	81.1a1	1	36"	96"		81.1b1	F	y	*	43	5	6	*	*See 8/A4.91
A	Z123	Office/FOP's		81.1a1	4	36"	96"		81.1b1	F	y	T.01	52	5	6		
A	Z153	Electrical/Corridor		81.1a1	1	36"	96"		81.1b1	F	y	T.02	38	1	2		
A	Z154	Emer. Electrical/Corridor		81.1a1	2	60"	96"		81.1b1	FF	y	T.02	41	1	7		
A	Z170	Corridor/Bldg. A Lobby	90	82b	1*	36"	96"	MHO	82b	W*		T.01	6	5	6		*2-1/4" thick door

		LOCATION	OPG.	FRAME					DOOR		HARDWARE			DETAILS			REMARKS
Door	Room	Room Name	Label			Width	Hgt.	Spcl.			Lock	Thr.	Set				
Lab.	No.	From / To	(Min.)	Mat'l	Type	(Inches)	(Inch.)	Prep.	Mat'l	Type	Y/N	No.	No.	Head	Jamb	Sill	
B	Z170	Corridor/Bldg. A Lobby	90	/	/	71"	140"		83b	OH2		/	72	8/A8.03	7/A8.03		See Note 2
C	Z170	Corridor/Center Lobby	90	81.1a1	11	72"	96"	MHO	81.1b1	FF		T.11	21	12	13		
A	Z190	Elevator Lobby/Corridor	90	81.1a1	2	72"	96"		81.1b1	NN		T.02	5	1	2		
B	Z190	Elevator Lobby/Exterior		81.1a1	6	72"	96"		81.1b1	E2	y		1	3	4		
A	Z191	Electric/Corridor		81.1a1	1	36"	96"		81.1b1	F	y		34	1	2		
A	Z192	Storage/Corridor		81.1a1	1	36"	96"		81.1b1	F	y		29	1	2		
A	Z193	Ice Room/Corridor		81.1a1	1	36"	96"		81.1b1	F	y		29	1	2		
B	Z193	Ice Room/Unloading		81.1a1	1	36"	96"		81.1b1	F	y		29	1	2		
A	Z194	Unloading Dock/Exterior		/	/	98"	97"	*	83a	OH1		/	72	10	9		*See Note 1
Ref Drawing: A1.2ZE																	
A	B204	Pantry/West Lobby		81.1a1	1	36"	96"		82c	*W	y	T.01	52	5	6		*Stile & Rail Dutch Door
A	Z202	Men's/Corridor	90	81.1a1	1	36"	96"		81.1b1	F	y	T.05	47	1	2		
A	Z203	Women's/Corridor	90	81.1a1	1	36"	96"		81.1b1	F	y	T.05	47	1	2		
A	Z204	Day Use Lockers/Men's		81.1a1	1	36"	96"		81.1b1	F	y	T.01	47	5	6		
A	Z205	Day Use Lockers/Women's		81.1a1	1	36"	96"		81.1b1	F	y	T.01	47	5	6		
A	Z206	Women's/Corridor	90	81.1a1	1	36"	96"		81.1b1	F	y	T.05	47	5	6		
A	Z207	Men's/Corridor	90	81.1a1	1	36"	96"		81.1b1	F	y	T.05	47	5	6		
A	Z208	Janitor/Corridor	90	81.1a1	1	36"	96"		81.1b1	F	y	T.02	39	5	6		
A	Z209	Corridor/Corridor	90	81.1a1	11	72"	96"		81.1b1	NN		T.02	5	1	2		
A	Z210	Tel. Data #4/Corridor		81.1a1	1	36"	96"		81.1b1	F	y	T.01	37	1	2		
A	Z212	Electrical/Corridor		81.1a1	1	36"	96"		81.1b1	F	y		34	1	2		
A	Z213	Emer. Electrical/Corridor	90	81.1a1	1	36"	96"		81.1b1	F	y	T.02	34	1	2		
A	Z214	Stair #4/Corridor	90	81.1a1	1	36"	96"		81.1b1	N	y		28	1	2		
A	Z220	Varsity Wrestling/Corridor	90	81.1a1	2	72"	96"		81.1b1	NN		T.02	24	1	2		
A	Z221	Wrestling Storage/Varsity Wrestling		81.1a1	1	36"	96"		81.1b1	F	y	T.01	39	5	6		
A	Z222	Team Room/Varsity Wrestling		81.1a1	1	36"	96"		81.1b1	FG	y	T.03	47	5	6		
A	Z223	Vestibule/Varsity Wrestling	20	81.1a1	2	72"	96"		81.1b1	FG2		T.02	24	5	6		
B	Z223	Vestibule/Varsity Wrestling	20	81.1a1	2	72"	96"		81.1b1	FG2		T.02	24	5	6		
A	Z224	Office/Varsity Wrestling		81.1a1	1	36"	96"		81.1b1	FG	y	T.03	43	5	6		
A	Z225	Office/Office		81.1a1	1	36"	96"		81.1b1	F	y	T.01	52	5	6		
A	Z226	Sound Closet/Office		81.1a1	1	36"	96"		81.1b1	F	y	T.03	42	5	6		See Note 17
A	Z227	Intramural Wrestling/Corridor	90	81.1a1	1	36"	96"		81.1b1	N		T.02	45A	5	6		
B	Z227	Intramural Wrestling/Varsity Wrestling		81.1a1	2	72"	96"		81.1b1	NN		T.01	62	5	6		See Note 8
C	Z227	Intramural Wrestling/Varsity Wrestling		81.1a1	1	36"	96"		81.1b1	N		T.01	47	5	6		See Note 8
A	Z228	Wrestling Storage/Intramural Wrestling		81.1a1	1	36"	96"		81.1b1	F	y	T.01	39	5	6		
A	Z229	Sound Closet/Intramural Wrestling		81.1a1	1	36"	96"		81.1b1	F	y	T.01	42	5	6		See Note 17
A	Z253	Electrical/Corridor		81.1a1	1	36"	96"		81.1b1	F	y	T.01	38	1	2		
A	Z254	Emer. Electrical/Corridor		81.1a1	2	60"	96"		81.1b1	FF	y	T.01	41	1	7		
A	Z270	Corridor/Bldg. A Lobby	90	/	/	71"	124"		83b	OH2		/	72	8/A8.03	7/A8.03		See Note 2
B	Z270	Corridor/Center Lobby	90	81.1a1	11	72"	96"	MHO	81.1b1	FF		T.11	21	12	13		
Ref Drawing: A1.3ZE																	
A	B303	XO/Center Lobby		81.1a1	1	36"	90"		Existing	F	y		56	5	6		See Note 12

		LOCATION	OPG.	FRAME					DOOR		HARDWARE			DETAILS			REMARKS
Door	Room	Room Name	Label			Width	Hgt.	Spcl.			Lock	Thr.	Set				
Lab.	No.	From / To	(Min.)	Mat'l	Type	(Inches)	(Inch.)	Prep.	Mat'l	Type	Y/N	No.	No.	Head	Jamb	Sill	
A	B304	OPS/Center Lobby		81.1a1	1	36"	90"		Existing	F	y	T.11	56	5	6		See Note 12
A	B308	DOI/Center Lobby		81.1a1	1	36"	90"		Existing	F	y		56	5	6		See Note 12
A	Z302	Men's/Corridor	90	81.1a1	1	36"	96"		81.1b1	F	y	T.05	47	1	2		
A	Z303	Women's/Corridor	90	81.1a1	1	36"	96"		81.1b1	F	y	T.05	47	1	2		
A	Z307	Climbing Wall/Corridor		89e	89e*	72"	96"		89e	*	y	T.09	24	*	*		See Dwg. A2.33
B	Z307	Climbing Wall/Corridor		89e	89e*	72"	96"		89e	*	y	T.09	24	*	*		See Dwg. A2.33
A	Z308	Janitor/Corridor	90	81.1a1	1	36"	96"		81.1b1	F	y	T.02	39	1	2		
A	Z309	Corridor/Corridor	90	81.1a1	2	72"	96"		81.1b1	FF		T.02	5	1	2		
A	Z310	Tel. Data #4/Corridor		81.1a1	1	36"	96"		81.1b1	F	y	T.01	37	1	2		
A	Z311	General Storage/Corridor		81.1a1	2	72"	96"		81.1b1	FF	y	T.01	41	1	2		
A	Z312	Electric/Corridor		81.1a1	1	36"	96"		81.1b1	F	y		34	1	2		
A	Z314	Stair #4/Corridor	90	81.1a1	1	36"	96"		81.1b1	N			28	1	2		
A	Z320	Administration/Corridor	90	81.1a1	2	72"	96"		81.1b1	FF		T.07	24	1	2		
B	Z320	Administration/West Lobby	20	81.1a1	15	72"	96"		81.1b1	FG2		T.07	24	5	6		
A	Z322	Conference Room/Administration		81.1a1	3	36"	96"		82a	F	y	T.01	56	5	6		
A	Z323	Staff Office/Administration		81.1a1	3	36"	96"		82a	F	y	T.01	56	5	6		
A	Z324	Staff Office/Administration		81.1a1	3	36"	96"		82a	F	y	T.01	56	5	6		
A	Z326	Asst. Admin./Administration		81.1a1	3	36"	96"		82a	F	y	T.01	56	5	6		
B	Z326	Asst. Admin./Administration		81.1a1	3	36"	96"		82a	F	y	T.01	56	5	6		
A	Z328	Class Coordinators/Administration		81.1a1	3	36"	96"		82a	F	y	T.01	56	5	6		
A	Z329	IMO Storage/IMO Office		81.1a1	1	36"	96"		82a	F	y	T.03	52	5	6		
A	Z330	IMO Office/Administration		81.1a1	3	36"	96"		82a	F	y	T.01	56	5	6		
A	Z331	Competitive Sports/Administration		81.1a1	3	36"	96"		82a	F	y	T.01	56	5	6		
A	Z332	Office/Competitive Sports		81.1a1	3	36"	96"		82a	F	y	T.01	52	5	6		
A	Z333	Kitchen/Administration		81.1a1	1	36"	96"		82a	F	y	T.03	56	5	6		
A	Z334	Staff Suite/Administration		81.1a1	1	36"	96"		82a	F	y	T.01	56	5	6		
A	Z335	Staff Office/Administration		81.1a1	3	36"	96"		82a	F	y	T.01	56	5	6		
A	Z337	Deputy/Administration		81.1a1	3	36"	96"		82a	F	y	T.01	52	5	6		
A	Z338	MOS/Administration		81.1a1	3	36"	96"		82a	F	y	T.01	54	5	6		
A	Z339	Admin. Support/Corridor		81.1a1	4	36"	96"		82a	FG	y	T.01	47	5	6		
B	Z339	Admin. Support/Corridor		81.1a1	3	36"	96"		82a	FG	y	T.01	47	5	6		
A	Z340	Corridor/Corridor		81.1a1	2	72"	96"		81.1b1	HG2	y	T.03	24	5	6		
A	Z341	Media Projection/Administration		81.1a1	2	72"	96"		82a	FF	y	T.01	24	5	6		
B	Z341	Media Projection/Administration		81.1a1	1	36"	96"		82a	F	y	T.01	45A	5	6		
A	Z342	Storage/Media Projection		81.1a1	1	36"	96"		82a	F	y	T.03	68	5	6		
A	Z343	Office Visiting Prof./Administration		81.1a1	3	36"	96"		82a	F	y	T.01	56	5	6		
A	Z344	Staff Suite/Administration		81.1a1	3	36"	96"		82a	F	y	T.01	56	5	6		
A	Z345	Staff Suite/Administration		81.1a1	1	36"	96"		82a	F	y	T.01	56	5	6		
A	Z346	Copy/Administration		81.1a1	1	36"	96"		82a	F	y	T.03	56	5	6		
A	Z347	Staff Office/Administration		81.1a1	3	36"	96"		82a	F	y	T.01	56	5	6		
A	Z348	Counseling Room/Administration		81.1a1	1	36"	96"		82a	F	y	T.01	56	5	6		
A	Z349	Admin. Storage/Administration		81.1a1	1	36"	96"		82a	F	y	T.03	56	5	6		

		LOCATION	OPG.	FRAME					DOOR		HARDWARE			DETAILS			REMARKS
Door	Room	Room Name	Label			Width	Hgt.	Spcl.			Lock	Thr.	Set				
Lab.	No.	From / To	(Min.)	Mat'l	Type	(Inches)	(Inch.)	Prep.	Mat'l	Type	Y/N	No.	No.	Head	Jamb	Sill	
A	Z350	Human Performance Lab/Corridor		81.1a1	2	72"	96"		81.1b1	HG2	y	T.03	62	5	6		
A	Z351	Storage/Human Performance Lab		81.1a1	1	36"	96"		81.1b1	F	y	T.03	52	5	6		
A	Z352	Staff Office/Human Performance Lab		81.1a1	1	36"	96"		82a	F	y	T.03	52	5	6		
B	Z352	Staff Office/Guidance Testing		81.1a1	3	36"	96"		82a	F	y	T.01	52	5	6		
A	Z353	Electric/Corridor		81.1a1	1	36"	96"		81.1b1	F	y	T.01	38	1	2		
A	Z354	Emer. Electric/Corridor		81.1a1	1	36"	96"		81.1b1	F	y	T.01	41	1	7		
A	Z355	Guidance Testing/Corridor		81.1a1	3	36"	96"		82a	F	y	T.01	56	5	6		
B	Z355	Guidance Testing/Human Performance Lab		81.1a1	3	36"	96"		82a	F	y	T.01	52	5	6		
A	Z370	Center Lobby/Corridor	90	81.1a1	11	72"	96"	MHO	81.1b1	FF	n	T.11	21	12	13		
Ref Drawing: A1.4ZE																	
A	Z402	Unisex Toilet/Corridor	90	81.1a1	1	36"	96"		81.1b1	F	y	T.05	47	1	2		
A	Z408	Janitor/Corridor	90	81.1a1	1	36"	96"		81.1b1	F	y	T.02	39	5	6		
A	Z409	Corridor/Corridor	90	81.1a1	2	72"	96"		81.1b1	NN	n		5	1	2		
A	Z410	Tel. Data #4/Corridor		81.1a1	1	36"	96"		81.1b1	F	y	T.01	37	1	2		
A	Z411	Storage/Corridor	90	81.1a1	2	72"	96"		81.1b1	FF	y		34A	17	18		
A	Z412	Electric/Corridor		81.1a1	1	36"	96"		81.1b1	F	y		34	1	2		
A	Z413	Emer. Electric/Corridor	90	81.1a1	1	36"	96"		81.1b1	F	y	T.02	34	1	2		
A	Z414	Stair #4/Corridor	90	81.1a1	1	36"	96"		81.1b1	N	n		28	1	2		
A	Z420	Mech./Storage		81.1a1	2	72"	96"		81.1b1	FF	y	T.09	35	5	6		
B	Z420	Mech./Corridor		81.1a1	2	72"	96"		81.1b1	FF	y		35	17	18		
A	Z453	Electric/Vestibule		81.1a1	1	36"	96"		81.1b1	F	y	T.01	38	5	6		
A	Z454	Emer. Electric/Vestibule		81.1a1	1	60"	96"		81.1b1	FF	y	T.01	41	5	7		
A	Z455	Vestibule/Corridor	90	81.1a1	1	36"	96"		81.1b1	F	y	T.01	34	1	2		
Ref Drawing: A1.5ZE																	
A	Z555	Vestibule/Roof		81.1a1	1	36"	80"		81.1b1	F	y	/	44	15	16	14	See Note 7
A	Z556	Elevator Mach. Room/Vestibule	90	81.1a1	1	36"	80"		81.1b1	F	y	T.01	34	5	6		
A	Z590	Vestibule/Roof		81.1a1	1	36"	80"		81.1b1	F	y	/	44	3	4	14 sim	See Note 7
Ref Drawing: A1.6ZE																	
A	Z690	Vestibule/Bridge	20	81.1a1	1	44"	96"		81.1b1	F	n	T.01	48	5	6		
B	Z690	Vestibule/Stair #9		81.1a1	1	36"	96"		81.1b1	N	y	T.01	47	5	6		
A	Z691	Stair #9/Climbing Wall	20	81.1a1	1	36"	96"		81.1b1	F	y	T.01	34	5	6		
B	Z691	Platform Gate				36"	*		55c	*		/	80	/	*		*See 5 & 6/A8.03
A	Z790	Elev. Mach. Room/Stair #9	90	81.1a1	1	36"	88"		81.1b1	F	y	T.01	38	5	6		

		LOCATION	OPG.	FRAME					DOOR		HARDWARE			DETAILS			REMARKS
Door	Room	Room Name	Label			Width	Hgt.	Spcl.			Lock	Thr.	Set				
Lab.	No.	From / To	(Min.)	Mat'l	Type	(Inches)	(Inch.)	Prep.	Mat'l	Type	Y/N	No.	No.	Head	Jamb	Sill	
Ref Drawing: A1.0A																	
A	0118	Entry/Corridor		81.1a1	1	36"	88"		81.1b1	F	y		24	5	6		
Ref Drawing: A11A																	
A	A100	Lobby/Vestibule	90	82b	2	72"	90"		82b	WW			5A				
B	A100	Lobby/Vestibule	90	82b	2	72"	90"		82b	WW			5A				
A	A101	Vestibule/Waiting		82b	2	67"	90"		82c	W1W1			4				See Note 15
A	A104	Vestibule/Corridor		81.1a1	2	67"	90"		82c	W1W1			5A				See Note 15
A	A105	Lobby/Vestibule	90	82b	2	72"	90"		82b	WW			5A				
A	A108	Lobby/Bldg. Y Corridor	90	81.1a1	11	72"	96"		81.1b1	NN			17	12	13		See Note 11
B	A108	Lobby/Boxing		Existing oak		42"	106.5"		Existing oak		y		39				See Note 13 & 15
C	A108	Lobby/Boxing		Existing oak		77.5"	105.5"		Existing oak			T.04	24A				See Note 13 & 15
D	A108	Lobby/Boxing		Existing oak		78"	105.5"		Existing oak			T.04	24A				See Note 13 & 15
E	A108	Lobby/Fitness		Existing oak		77"	106"		Existing oak			T.04	24A				See Note 13 & 15
F	A108	Lobby/ PT Rehab		Existing oak		77"	105.5"		Existing oak			T.04	24A				See Note 13 & 15
G	A108	Lobby/PT Rehab		Existing oak		42"	106.5"		Existing oak		y		39				See Note 13 & 15
Ref Drawing: A1.1A1																	
A	A100	Lobby/Vestibule	90	82b	2	72"	90"		82b	WW			5A				
B	A100	Lobby/Vestibule	90	82b	2	72"	90"		82b	WW			5A				
A	A101	Vestibule/PE Fitness		82b	2	67"	90"			/			4				See Note 15
A	A102	PE Fitness/Lobby		Existing oak		77"	106"		Existing oak			T.04	24A				See Note 13 & 15
B	A102	PE Fitness/Lobby		Existing oak		77"	105.5"		Existing oak			T.04	24A				See Note 13 & 15
A	A103	PE Fitness/Lobby		Existing oak		77.5"	105.5"		Existing oak			T.04	24A				See Note 13 & 15
B	A103	PE Fitness/Lobby		Existing oak		78"	105.5"		Existing oak			T.04	24A				See Note 13 & 15
A	A104	Vestibule/Pe Fitness		81.1a1	2	67"	90"		82c	W1W1			5A				See Note 15
A	A105	Lobby/Vestibule	90	82b	2	72"	90"		82b	WW			5A				
A	A106	Office/Pe Fitness		81.1a1	4	36"	96"		81.1b1	F	y	T.08	43	5	6		
A	A107	Storage/PE Fitness		81.1a1	2	72"	96"		81.1b1	FF	y	T.04	51	5	6		
B	A107	Storage/Lobby		Existing oak		42"	106.5"		Existing oak		y		39				See Note 13 & 15
A	A108	Lobby/Bldg. Y Corridor		82b	11	72"	96"		81.1b1	NN			17	12	13		See Note 11
B	A108	Lobby/PE Fitness		Existing oak		64"	80.5"		82c	W1W1		T.04	5A				See Note 15
A	A109	Storage/PE Fitness		81.1a1	2	72"	96"		81.1b1	FF	y	T.04	51	5	6		
B	A109	Storage/Lobby		Existing oak		42"	106.5"		Existing oak		y		39				See Note 13 & 15
A	A110	Office/PE Fitness		81.1a1	4	36"	96"		81.1b1	F	y	T.08	43	5	6		
A	A111	Sound Closet/Office		81.1a1	1	36"	96"		81.1b1	F	y	T.03	42	5	6		See Note 17
A	A112	Sound Closet/Office		81.1a1	1	36"	96"		81.1b1	F	y	T.03	42	5	6		See Note 17
Ref Drawing: A1.2A																	
A	A200	Lobby/Bldg. Y. Corridor	90	82b	1	36"	80"	MHO	82b	W		T.01	26A				
A	A201	Vestibule/Lobby	90	82b	2	72"	90"		82b	WW			5A				
B	A201	Vestibule/Lobby	90	82b	2	72"	90"		82b	WW			5A				
A	A202	Hayes Gymnasium/Bldg. Y Corridor	90	81.1a1	2	71"	94"		81.1b1	NN		T.11	24A	8	8		See Note 15
B	A202	Hayes Gymnasium/Bldg. Y Corridor	90	81.1a1	2	63"	86.5"		81.1b1	NN		T.11	24A	8	8		See Note 15
A	A204	Vestibule/Lobby	90	82b	2	72"	90"		82b	WW			5A				

		LOCATION	OPG.	FRAME					DOOR		HARDWARE			DETAILS			REMARKS
Door	Room	Room Name	Label			Width	Hgt.	Spcl.			Lock	Thr.	Set				
Lab.	No.	From / To	(Min.)	Mat'l	Type	(Inches)	(Inch.)	Prep.	Mat'l	Type	Y/N	No.	No.	Head	Jamb	Sill	
B	A204	Vestibule/Lobby	90	82b	2	72"	90"		82b	WW			5				
A	A205	Lobby/Bldg Y Corridor	90	82b	1	36"	80"		82b	W			26A				
Ref Drawing: A1.3A																	
A	A301	Stair #7/Bldg. Y Corridor	90	81.1a1	2	72"	84"		81.1b1	FF		*	18	8	8	*	*See 8/A4.91; See Note 15
A	A305	Lobby/Vestibule	90	82b	2	67"	92.5"		82b	WW			5				See Note 15
B	A305	Lobby/Vestibule	90	82b	2	67"	92.5"		82b	WW			5				See Note 15

REMARKS		
Note 1		Criteria for OH-1: Insulated curtain; Factory finished; Electrically operated rolling door with surface mounted keyed open/close/stop switch located withing view of opening; Bottom sensing edge
		device. Located at loading dock. Specified in section 08330.
Note 2		Criteria for OH2: Steel, factory primed for field finish fire doors; Electric operation with a surface mounted keyed open/close/stop switch located in an adjacent electric/emergency electric closet
		with visibility of the opening if possible. Doors connected to fire alarm system for release and gravity closing. Minimum required rating of 1 1/2 hours. Located between the existing building(s)
		and new construction. Specified in section 08330.
Note 3		Criteria for OH3: Steel, factory primed for field finish fire door on the corridor side of opening; Located between corridor Y001 and CS Equipment Y020. Electric operation with a surface mounted
		keyed open/close/stop switch located adjacent to the opening; Bottom sensing edge device. Doors connected to fire alarm system for release and gravity closing. Specified in section 08330.
Note 4		Criteria for OH4: Steel, factory primed for field finish foor on room side of opening; Located between corridor Y001 and DPE Equipment Y010; Manually operated metal rolling counter shutter;
		Connected to fire alarm system for release and gravity closing. Specified in section 08331.
Note 5		Door dimension is from counter to ceiling.
Note 6		Door dimension is from floor to ceiling.
Note 7		Door located above 20" high curb.
Note 8		2" undercut
Note 9		See Frame Type 12 on Drawing A8.02 for dimensions. See detail 11/A8.03.
Note 10		See Frame Type 5 on Drawing A8.02 for dimensions.
Note 11		Fully louvered double doors Type L1 per NAAMM Standards (NAAMM = National Association of Architectural Metal Manufacturers)
Note 12		Salvaged existing wood stile and rail door to be installed in new frame. Frame size to match existing door dimensions. Patch door to match existing material/finish
		and adjust for hardware required. Refinish entire door and patches to match existing. Door is 2 1/4" thick nominal. Verify dimensions/conditions in field.
Note 13		Salvaged existing wood stile and rail door to be re-installed in existing wood frame to swing in opposite direction. Patch door and frame to match existing material/finish and adjust for
		hardware required. Refinish entire door, frame and patches to match existing. Door is 3" thick nominal. Verify dimensions/conditions in field.
Note 14		Install existing door and hardware.
Note 15		Field measure to verify frame and/or door dimensions.
Note 16		Doors to be prepared for future card reader capabilities. See detail 9/A8.03.
Note 17		3/4" undercut
Note 18		4" high concrete curb at sill.

SECTION 08110

STEEL DOORS AND FRAMES

PART 1 GENERAL

1.1 REFERENCES

The publications listed below form a part of this specification to the extent referenced. The publications are referred to in the text by basic designation only.

AMERICAN SOCIETY FOR TESTING AND MATERIALS (ASTM)

ASTM C 236	(1989; R 1993) Steady-State Thermal Performance of Building Assemblies by Means of a Guarded Hot Box
ASTM C 976	(1990) Thermal Performance of Building Assemblies by Means of a Calibrated Hot Box
ASTM D 2863	(1991) Measuring the Minimum Oxygen Concentration to Support Candle-Like Combustion of Plastics (Oxygen Index)
ASTM E 283	(1991) Determining the Rate of Air Leakage Through Exterior Windows, Curtain Walls, and Doors Under Specified Pressure Differences Across the Specimen

DOOR AND HARDWARE INSTITUTE (DHI)

DHI A115.1G	(1994) Installation Guide for Doors and Hardware

NATIONAL FIRE PROTECTION ASSOCIATION (NFPA)

NFPA 80	(1995) Fire Doors and Windows
NFPA 80A	(1993) Protection of Buildings from Exterior Fire Exposures
NFPA 101	(1997) Safety to Life from Fire in Buildings and Structures
NFPA 252	(1995) Fire Tests of Door Assemblies

STEEL DOOR INSTITUTE (SDOI)

SDOI SDI-100	(1991) Standard Steel Doors and Frames
SDOI SDI-106	(1996) Standard Door Type Nomenclature
SDOI SDI-107	(1984) Hardware on Steel Doors (Reinforcement - Application)

1.2 SUBMITTALS

Government approval is required for submittals with a "GA" designation; submittals having an "FIO" designation are for information only. The following shall be submitted in accordance with Section 01330 SUBMITTAL PROCEDURES:

SD-04 Drawings

Steel Doors and Frames; GA.

Drawings using standard door type nomenclature in accordance with SDOI SDI-106 indicating the location of each door and frame, elevation of each model of door and frame, details of construction, method of assembling sections, location and extent of hardware reinforcement, hardware locations, type and location of anchors for frames, and thicknesses of metal. Drawings shall include catalog cuts or descriptive data for the doors, frames, and weatherstripping including air infiltration data and manufacturers printed instructions.

SD-09 Reports

Fire Rated Doors; FIO.

A letter by a nationally recognized testing laboratory which identifies the product manufacturer, type, and model; certifying that the laboratory has tested a sample assembly in accordance with NFPA 252 and issued a current listing for same.

SD-13 Certificates

Fire Rated Doors; FIO. Thermal Insulated Doors; FIO. Sound Rated Doors; FIO.

a. Certification of Oversized Fire Doors: Certificates of compliance in accordance with the requirements of NFPA 252 for fire doors exceeding the sizes for which label service is available.

b. Certification of Thermal Insulating Rating: Certification or test report for thermal insulated doors shall show compliance with the specified requirements. The certification, or test report, shall list the parameters and the type of hardware and perimeter seals used to achieve the rating.

SD-14 Samples

Steel Doors and Frames; GA.

Manufacturer's standard color samples of factory applied finishes.

1.3 DELIVERY AND STORAGE

During shipment, welded unit type frames shall be strapped together in pairs with heads at opposite ends or shall be provided with temporary steel spreaders at the bottom of each frame; and knockdown type frames shall be securely strapped in bundles. Materials shall be delivered to the site in undamaged condition, and stored out of contact with the ground and under a weathertight covering permitting air circulation. Doors and assembled frames shall be stored in an upright position in accordance with DHI A115.1G. Abraded, scarred, or rusty areas shall be cleaned and touched up with matching finishes.

1.4 WARRANTY

Manufacturer's standard performance guarantees or warranties that extend beyond a 1 year period shall be provided.

PART 2 PRODUCTS

2.1 MATERIALS

Hot Rolled Steel: ASTM A 568 and ASTM A 569, commercial quality, pickled and oiled.

Cold Rolled Steel: ASTM A 366 and ASTM A 568, commercial quality carbon steel.

Galvanized Sheet Steel: Roller leveled commercial quality zinc coated carbon steel sheets complying with ASTM A 525, G60, mill phosphatized.

Anchors and Fasteners: ASTM A 153, Class C or D, 18 gage hot dipped galvanized steel.

2.2 FABRICATION - GENERAL

Provide doors and frames truly rigid, straight, plumb, level and square. Match sizes, shapes and profiles indicated on approved shop drawings.

2.2.1 Exterior Work:

Fabricate exterior doors and frames from galvanized sheet steel with closed tops and bottoms.

2.2.2 Concealed Work:

Fabricate concealed components from either hot or cold rolled steel.

2.2.3 Preparation for Hardware:

Fabricate doors and frames to receive finish hardware as indicated on approved final hardware schedules. Comply with ANSI A115 Series

specifications.

2.3 STEEL DOORS

2.3.1 Styles:

Provide steel doors of types and sizes indicated on Drawings and Schedules.

2.3.2 Faces:

Fabricate exposed faces from stretcher leveled cold rolled steel.

2.3.3 Interior Doors (Non-Rated):

SDOI SDI-100, Grade III, Extra-Heavy Duty, 14 gage minimum face sheets, Model 2A, seamless composite construction.

2.3.4 Interior Doors (Fire-Rated):

SDOI SDI-100, Grade III, Extra-Heavy Duty, 14 gage minimum face sheets, Model 2A, with seamless mineral fiberboard composite construction.

Fire rated door assemblies shall bear the listing identification label of a nationally recognized testing laboratory qualified to perform tests of fire door assemblies in accordance with NFPA 252 and having a listing for the tested assemblies. The fire resistance rating shall be as shown. Doors exceeding the sizes for which listing label service is offered shall be in accordance with NFPA 252. Listing identification labels shall be constructed and permanently applied by a method which results in their destruction should they be removed.

2.3.5 Exterior Doors:

All exterior steel doors shall be thermally insulated as specified herein.

SDOI SDI-100, Grade III, Extra Heavy Duty, 14 gage minimum face sheets, seamless, Model 2A.

The interior of thermal insulated doors shall be completely filled with rigid plastic foam permanently bonded to each face panel. The thermal conductance (U-value) through the door shall not exceed 0.41 btu/hr times sq f times f when tested as an operational assembly in accordance with ASTM C 236 or ASTM C 976. Doors with cellular plastic cores shall have a minimum oxygen index rating of 22 percent when tested in accordance with ASTM D 2863.

2.3.6 Louvers:

Sightproof Y or V profile, 24 gage steel blades, and 20 gage steel frame.

1. Provide self-closing, UL fire-rated louvers in rated assemblies.

2.3.7 Glazing Stops:

Manufacturer's standard rolled steel shapes with mitered corners and countersunk, tamper proof fasteners. Locate fasteners on least public side of door.

2.4 STEEL FRAMES

Provide steel frames from cold rolled steel sheets for doors, transoms, sidelites, borrow lights, and elsewhere as indicated.

All steel frames shall have plaster guards at strikes.

2.4.1 Steel Gages:

Provide frames and components from the following:

1. Plaster guards and mortar boxes: 26 gage.
2. Interior frames 5 ft. wide and smaller: 14 gage.
3. Interior frames over 5 ft. wide: 12 gage.
4. Exterior frames: 12 gage.
5. Floor anchors: 14 gage
6. Strike reinforcement: 14 gage.
7. Closer reinforcement: 12 gage.
8. Head channel reinforcement for frames over 4 ft. wide: 12 gage.
9. Hinge reinforcement: 10 gage.

2.4.2 Anchors:

Provide minimum of three anchors at each jamb; 'T' type for masonry, 'Z' type for metal studs. Provide floor anchors at each jamb. Provide UL approved anchors at fire-rated assemblies.

2.4.3 Frame Construction:

Fabricate frames with mitered and fully welded corners and seams. Grind and dress seams to be flush and invisible after priming.

2.4.4 Silencers:

Prepare single-leaf interior door frames to receive three resilient silencers. Prepare double-leaf interior door frames to receive two resilient silencers.

F. Stops: Extend stops to bottom of frame and cut at 90o.

2.5 WEATHERSTRIPPING

Unless otherwise specified in Section 08700 BUILDERS' HARDWARE, weatherstripping shall be as follows: Weatherstripping for head and jamb shall be manufacturer's standard elastomeric type of synthetic rubber, vinyl, or neoprene and shall be installed at the factory or on the jobsite in accordance with the door frame manufacturer's recommendations. Weatherstripping for bottom of doors shall be as shown. Air leakage rate of weatherstripping shall not exceed 0.20 cfm per linear foot of crack when tested in accordance with ASTM E 283 at standard test conditions.

2.6 BORTROWED LITES, TRANSOM AND SIDELIGHT PANELS

Panels for borrowed lites, transoms and sidelights shall be constructed in accordance with SDOI SDI-100. Panels shall be nonremovable from the outside of exterior doors or the unsecure side of interior doors.

2.7 GLAZING

Glazing shall be as specified in Section 08810 GLASS AND GLAZING . Removable glazing beads shall be screw-on or snap-on type.

2.8 REVEALS AND BATTENS

Reveals and battens shall be solid 1 in. x 1/2 in. steel bars, welded to door (plug weld from interior) with welded hex heads from 3/4 in. diameter bolt to provide the appearance of bolted on battens. Reveals shall be indented and battens shall be welded to exterior skins prior to shop finishing.

2.9 PREPARATION FOR FUTURE ELECTRICALLY OPERATED HARDWARE

Doors and frames as indicated or scheduled shall be prepared for future installation by others, of electrically operated hardware and related transfer devices and wiring. Provide door and frame preparations, mortar boxes, conduit, reinforcings, and the like as required to permit this future work to be performed. Provide required interim components to permit to permit the proper provision of the hardware required as part of this Contract. Such interim components shall include adapters, shims, fills, cover plates, fasteners and the like to permit the completion of the doors and frames in accordance with the requirements of this Contract. Interim components shall be removable without cutting, drilling, grinding or other destructive methods.

2.10 FACTORY FINISH

Doors and frames shall be phosphatized, primed, and finished as specified herein. Color shall be as scheduled in Section 09915, COLOR SCHEDULE.

2.10.1 Pretreatment

Thoroughly clean steel doors and frames with liquid and vapor degrease to conform with FS FT-C-490.

2.10.2 Galvanizing Touch-up

Apply sprayed on zinc chromate primer to touch-up all damaged galvanized surfaces during punching, welding and grinding.

2.10.3 Primer:

Coat all pretreated doors and frames with Tnemec Series 69 Hi-Build Epoxoline, or equal as manufactured by Ameron or Valspar. Minimum dry film thickness shall be 3 mils.

2.10.4 Finish Coats

Coat all doors and frames with Tnemec Series 75 Semi-Gloss Endura-Shield Aliphatic Acrylic Polyurethane, or equal as manufactured by Valspar or Ameron. Minimum dry film thickness shall be 3 mils.

PART 3 EXECUTION

3.1 INSTALLATION

Installation shall be in accordance with DHI A115.1G. Preparation for surface applied hardware shall be in accordance with SDOI SDI-107. Rubber silencers shall be installed in door frames after finish painting has been completed; adhesively applied silencers are not acceptable. Weatherstripping shall be installed at exterior door openings to provide a weathertight installation. Installation and operational characteristics of fire doors shall be in accordance with NFPA 80, NFPA 80A and NFPA 101. Hollow metal door frames shall be solid grouted as shown.

3.1.1 Thermal Insulated Doors

Hardware and perimeter seals shall be adjusted for proper operation. Doors shall be sealed weathertight after installation of hardware and shall be in accordance with Section 07900 JOINT SEALING.

-- End of Section --

SECTION 08120

STAINLESS STEEL DOORS AND FRAMES

PART 1 GENERAL

1.1 REFERENCES

The publications listed below form a part of this specification to the extent referenced. The publications are referred to in the text by basic designation only.

AMERICAN SOCIETY FOR TESTING AND MATERIALS (ASTM)

ASTM A 167	Stainless and Heat-Resisting Chromium-Nickel Steel Plate, Sheet, and Strip

National Fire Protection Association (NFPA)

NFPA 80	(1995) Standard for Fire Doors and Windows
NFPA 252	(1995) Fire Tests of Door Assemblies

STEEL DOOR INSTITUTE (SDOI)

SDOI SDI-106	(1996) Standard Door Type Nomenclatur

1.2 SUBMITTALS

Government approval is required for submittals with a "GA" designation; submittals having an "FIO" designation are for information only. The following shall be submitted in accordance with Section 01330 SUBMITTAL PROCEDURES:

SD-04 Drawings

Steel Doors and Frames; GA.

Drawings using standard door type nomenclature in accordance with SDOI SDI-106 indicating the location of each door and frame, elevation of each model of door and frame, details of construction, method of assembling sections, location and extent of hardware reinforcement, hardware locations, type and location of anchors for frames, and thicknesses of metal. Drawings shall include catalog cuts or descriptive data for the doors, frames, and weatherstripping including air infiltration data and manufacturers printed instructions.

SD-09 Reports

Fire Rated Doors; FIO.

A letter by a nationally recognized testing laboratory which identifies the product manufacturer, type, and model; certifying that the laboratory has tested a sample assembly in accordance with NFPA 252 and issued a current listing for same.

SD-13 Certificates

Fire Rated Doors; FIO.

SD-14 Samples

Steel Doors and Frames; GA.

Manufacturer's standard cut-away samples showing stainless steel finishes.

1.3 QUALITY ASSURANCE

Source: Provide stainless steel doors and frames by a single manufacturer for entire project.

For stainless steel doors and frames installed in fire-rated assemblies and where indicated or required by authorities having jurisdiction, provide door and frame assemblies that comply with NFPA 80, and which have been tested, listed and labeled in compliance with ASTM E 152 by an independent agency acceptable to authorities having jurisdiction.

1.4 PRODUCT STORAGE AND HANDLING

Doors, frames, and related items shall be properly packaged and protected during shipping, handling, and storage to prevent damage.

Store materials indoors under cover on raised platforms, fully protected from dirt and moisture.

1.5 WARRANTY

Manufacturer's standard performance guarantees or warranties that extend beyond a one-year period shall be provided.

PART 2 PRODUCTS

2.1 ACCEPTABLE MANUFACTURERS

Subject to compliance with requirements, provide products of one of the following:

1. American Metal Door
2. Bilt-Rite Steel Buck
3. Carlson Products
4. Curries

2.2 MATERIALS

2.2.1 Stainless Steel Sheet:

ASTM A 167, AISI Type 316L.

2.2.2 Anchors and Fasteners:

ASTM A 167, AISI Type 316L.

2.3 FABRICATION - GENERAL

Provide doors and frames truly rigid, straight, plumb, level and square. Match sizes, shapes and profiles indicated on approved shop drawings.

Concealed Work: Fabricate concealed components from Type 316 stainless steel sheet.

Preparation for Hardware: Fabricate doors and frames to receive finish hardware as indicated on approved final hardware schedules. Comply with ANSI A115 series specifications.

2.4 STAINLESS STEEL DOORS

Styles: Provide stainless steel doors of types and sizes indicated on Drawings and Schedules.

Faces: Fabricate exposed faces from stainless steel sheet.

Seamless Interior Doors: SDI-100, Grade III, Extra Heavy Heavy Duty, 16 gage minimum face sheets, bonded permanently to stiffened stainless steel core.

2.5 STAINLESS STEEL FRAMES

Provide stainless steel frames fabricated from stainless steel sheet.

Stainless Steel Gages: Provide frames and components from the following:

1. Plaster guards and mortar boxes: 26 gage.
2. Interior frames 5 ft. wide and smaller: 16 gage.
3. Interior frames over 5 ft. wide: 14 gage.
4. Floor anchors: 14 gage
5. Strike reinforcement: 14 gage.
6. Closer reinforcement: 12 gage.
7. Head channel reinforcement for frames over 4 ft. wide: 12 gage.
8. Hinge reinforcement: 10 gage.

Anchors: Provide minimum of three anchors at each jamb; 'T' type for masonry, 'Z' type for metal studs. Provide floor anchors at each jamb. Provide UL approved anchors at fire-rated assemblies.

Frame Construction: Fabricate frames with mitered and fully welded corners

and seams. Grind and dress seams to be flush and invisible after polishing.

Silencers: Prepare single-leaf interior door frames to receive three resilient silencers. Prepare double-leaf interior door frames to receive two resilient silencers.

Stops: Extend stops to bottom of frame and cut at 90 degrees.

2.6 SHOP FINISH

Provide AISI No. 4 Satin finish on all exposed stainless steel surfaces.

PART 3 EXECUTION

3.1 INSPECTION

Examine walls and conditions under which this work is to be performed. Notify Contractor in writing of conditions detrimental to proper completion of the work. Beginning work means Installer accepts substrates and conditions.

3.2 INSTALLATION

3.2.1 Manufacturer's Instructions:

Strictly comply with manufacturer's instructions and recommendations, except where more restrictive requirements are specified in this Section. Comply with referenced standards.

3.2.2 Frames:

Where conditions allow, place frames prior to walls or ceilings. Accurately plumb, level, align, square and brace. Place frame anchors securely at three points near hinge locations on both jambs. Place anchors at both sides into floor.

1. Secure angle floor anchors with two, 3/8 in. tempered steel expansion bolts each. Set other anchors, except those built-in by other trades. Set exposed heads centered in holes and flush with frames.

2. Set heads of thru-type anchor bolts flush with frame.

3.2.3 Doors:

Install hinges supplied under Section 08710-BUILDERS' HARDWARE and hang doors accurately into frame openings with uniform tight clearances around jambs and head. Doors shall swing freely without binding or scraping and shall remain motionless at any location when released.

3.3 TOLERANCES

Install doors in frames with clearances and tolerances specified in SDOI SDI 100.

3.4 ADJUSTING, TOUCH-UP, AND REPAIR

A. After installation of doors, frames, and hardware, make adjustments and corrections to leave operating parts in perfect operating condition. Doors shall not rub frame, scratch primer, nor bind.

SECTION 08210

WOOD DOORS

PART 1 GENERAL

1.1 REFERENCES

The publications listed below form a part of this specification to the extent referenced. The publications are referred to in the text by basic designation only.

ARCHITECTURAL WOODWORK INSTITUTE (AWI)

AWI-02	(1994) Architectural Woodwork Quality Standards, Guide Specifications and Quality Certification Program

NATIONAL FIRE PROTECTION ASSOCIATION (NFPA)

NFPA 80	(1995) Fire Doors and Windows
NFPA 101	(1997) Safety to Life from Fire in Buildings and Structures
NFPA 252	(1995) Fire Tests of Door Assemblies

NATIONAL WOOD WINDOW & DOOR ASSOCIATION (NWWDA)

NWWDA I.S. 1-A	(1993) Architectural Wood Flush Doors
NWWDA I.S. 4	(1994) Water-Repellent Preservative Non-Pressure Treatment for Millwork

1.2 GENERAL REQUIREMENTS

1.2.1 Standard Products

Doors shall be of the type, size, and design required, and shall be the standard products of manufacturers regularly engaged in the manufacture of wood doors.

1.2.2 Marking

Each door shall bear a stamp, brand, or other identifying mark indicating quality and construction of the door. The identifying mark or a separate certification shall include identification of the standard on which construction of the door is based, identity of the manufacturing plant, identification of the standard under which preservative treatment, if used, was made, and identification of the doors having a Type I glue bond.

1.3 SUBMITTALS

Government approval is required for submittals with a "GA" designation; submittals having an "FIO" designation are for information only. The following shall be submitted in accordance with Section 01330 SUBMITTAL PROCEDURES:

SD-04 Drawings

Wood Doors; GA.

Drawings indicating the location of each door, elevation of each type of door, details of construction, marks to be used to identify the doors, and location and extent of hardware blocking. Drawings shall include catalog cuts or descriptive data for doors, weatherstripping, flashing, and thresholds to be used.

SD-06 Instructions

Fire Doors; FIO.

Manufacturers preprinted installation and touch-up instructions.

SD-13 Certificates

Fire Rated Doors; GA. Adhesives; FIO.

Certificates for oversize fire doors and/or door/frame assemblies stating that the doors are identical in design, materials, and construction to a door that has been tested and meets the requirements for the class indicated. Certificate stating that adhesives used for proposed doors do not contain any formaldehyde.

SD-14 Samples

Factory Coated Paint Finish; GA.

Samples of factory applied paint finish.

1.4 STORAGE

Doors shall be stored in fully covered areas and protected from damage and from extremes in temperature and humidity. Doors shall be stored on supports to prevent warping or twisting, and to provide ventilation. Factory cartons or wrappers shall be kept intact until installation.

1.5 HARDWARE

Hardware, including weatherstripping and thresholds, is specified in Section 08700 BUILDERS' HARDWARE.

1.6 GLAZING

Glazing is specified in Section 08810 GLASS AND GLAZING.

1.7 WARRANTY

Manufacturer's standard performance guarantees or warranties that extend beyond a 1 year period shall be provided.

PART 2 PRODUCTS

2.1 GENERAL FABRICATION REQUIREMENTS

2.1.1 Edge Sealing

Wood end-grain exposed at edges of doors shall be sealed prior to shipment.

2.1.2 Preservative Treatment

Exterior softwood doors shall be water-repellent preservative treated in accordance with NWWDA I.S. 4.

2.1.3 Adhesives

Adhesives shall be in accordance with NWWDA I.S. 1-A, requirements for Type I Bond Doors (waterproof) for exterior doors and requirements for Type II Bond Doors (water-repellent) for interior doors. Adhesive for doors to receive a transparent finish shall be nonstaining. Adhesives shall contain no formaldehydes.

2.1.4 Prefitting

Doors shall be furnished prefitted or unfitted at the option of the Contractor, except plastic laminate clad doors shall be furnished prefit in accordance with the standards under which they are produced.

2.2 FLUSH DOORS

Flush doors shall be solid core and shall conform to NWWDA I.S. 1-A, except for the one year acclimatization requirement in paragraph T-2, which shall not apply. Wood doors shall be 5-ply construction with faces, stiles, and rails bonded to the cores.

2.2.1 Core Construction

2.2.1.1 Solid Cores

Door construction shall be particle board core or mineral core with vertical and horizontal edges bonded to the core. Blocking and hardware reinforcements for particle board and mineral core doors shall be in accordance with NWWDA I.S. 1-A.

2.2.2 Face Panels

2.2.2.1 Natural Finished Wood Veneer Doors

Veneer doors to receive natural finish shall be Premium Grade, book matched quarter sawn/sliced white oak veneer in accordance with NWWDA I.S. 1-A. Vertical stile strips shall be selected to provide edges of the same species and/or color as the face veneer. Doors shall be factory-finished.

2.3 FACTORY FINISHED DOORS

Factory finishing of doors shall conform to AWI-02 Section 1500.

2.3.1 Natural Finished Doors

Doors to receive natural finish shall be Premium Grade in accordance with AWI-02. Finish shall be in accordance with paragraph FINISHING.

2.4 FIRE RATED DOORS

Fire rated door assemblies shall bear the listing identification label of a nationally recognized testing laboratory qualified to perform tests of fire door assemblies in accordance with NFPA 252 and having a listing for the tested assemblies. The specific time interval rating on the labels shall be as shown. Door assemblies shall be in accordance with NFPA 80. Listing identification on labels shall be constructed and permanently applied by a method which results in their destruction should they be removed.

2.4.1 Reinforcement Blocking

Fire rated doors shall be provided, as required, with hardware reinforcement blocking, and top, bottom, and intermediate rail blocking. Lock blocks shall be not less than 5 inches by 18 inches. Reinforcement blocking shall be in compliance with the manufacturer's labeling requirements. Reinforcement blocking shall not be of mineral material.

2.4.2 Stile Edges

Composite fire rated doors shall be provided with vertical stile edges that do not contain fire retardant salts. Stiles shall be special laminated materials type.

2.5 FINISHING

2.5.1 Factory Coated Natural Finish

All wood doors shall receive a factory coated natural transparent finish conforming to AWI-02, Section 1500, Premium Grade, stain, medium rubbed sheen, close grain effect. Finish shall be AWI factory finish system Number TR3 or TR4. Color of the natural finish shall be as selected by Contracting Officer. Edges of unfitted doors shall be field finished after fitting to the frames.

PART 3 EXECUTION

3.1 INSTALLATION OF DOORS

3.1.1 General Use Doors

Doors shall be fit, hung, and trimmed as required. Door shall have a clearance of 1/8 inch at the sides and top and shall have a bottom clearance of 1/4 inch over thresholds and 1/2 inch at other locations unless otherwise shown. The lock edge or both edges of doors shall be beveled at the rate of 1/8 inchin 2 inches. Cuts made on the job shall be sealed immediately after cutting, using a clear varnish or sealer. Bottom of doors shall be undercut to allow clear door swing over carpeted areas. Vertical edges of doors which have not been rounded or beveled at the factory shall be eased when the doors are installed.

3.1.2 Fire Doors

Installation, hardware, and operational characteristics shall conform to NFPA 80 and NFPA 101 and shall be in strict conformance with the manufacturer's printed instructions. Properly sized pilot holes shall be drilled for screws in door edges. Factory applied labels shall remain intact where installed. Labeled hinge stile edge and top edge of door shall not be trimmed. Lockstile edge and bottom edge may be trimmed only to the extent recommended by the door manufacturer.

-- End of Section --

SECTION 08212

STILE AND RAIL WOOD DOORS

PART 1 GENERAL

1.1 REFERENCES

The publications listed below form a part of this specification to the extent referenced. The publications are referred to in the text by basic designation only.

ARCHITECTURAL WOODWORK INSTITUTE (AWI)

AWI Quality Standards	(1994) Guide Specifications and Quality Certification Program

NATIONAL FIRE PROTECTION ASSOCIATION (NFPA)

NFPA 80	(1995) Fire Doors and Windows
NFPA 252	(1995) Fire Tests of Door Assemblies

NATIONAL WOOD WINDOW AND DOOR ASSOCIATION (NWWDA)

NWWDA I.S.6	(1991) Industry Standard for Wood Stile and Rail Doors

1.2 SUBMITTALS

Government approval is required for submittals with a "GA" designation; submittals having an "FIO" designation are for information only. The following shall be submitted in accordance with Section 01330 SUBMITTAL PROCEDURES:

SD-01 Data

Stile and Rail Wood Doors; GA, Wood Door Frames; GA.

Door manufacturer's technical data for each type of door and wood frame required, including details of construction relative to materials, dimensions of individual components, profiles, fire ratings, and finishes.

SD-04 Drawings

Stile and Rail Wood Doors; GA, Wood Door Frames; GA.

Indicate location and size of each door and frame; elevation of each door and frame; construction details not covered in product data including those for stiles, rails, panels, frames, and moldings (sticking); location and

extent of hardware cutouts; fire ratings; and factory finishing requirements.

SD-13 Certificates

Stile and Rail Wood Doors; FIO, Wood Door Frames; FIO.

Certificate of Product Compliance: Manufacturer's certificate evidencing compliance of stile and rail wood doors with specified requirements, including fire ratings.

SD-14 Samples

Stile and Rail Wood Doors; FIO, Wood Door Frames; FIO.

Corner section, 1 ft.-0 in. square, showing edges, faces, joinery and material qualities of typical stile, rail, molding and panel for each exposed material, door type and finish required, and frame; and as follows:

1. Doors for Transparent Finish: Door faces representing typical range of color and grain for each veneer and lumber species required.

1.3 QUALITY ASSURANCE

1.3.1 Single Source Responsibility:

Obtain fire-rated, stile and rail panel wood doors from a single manufacturer.

1.3.2 Fire-Rated Stile and Rail Panel Wood Doors:

Provide stile and rail panel wood doors which are identical in materials and construction to units tested in door and frame assemblies per NFPA 252 and which are labeled and listed for fire ratings indicated by UL, Warnock Hersey or other testing and inspection agency acceptable to authorities having jurisdiction.

1.3.3 Product Certification:

Require door manufacturer to certify that doors comply with specified requirements including those of referenced door standard.

1. Mark, label or otherwise identify panel wood doors as complying with NWWDA I.S.6.

1.4 PRODUCT DELIVERY, STORAGE, AND HANDLING

Protect doors during transit, storage and handling to prevent damage, soiling and deterioration. Comply with NWWDA pamphlet "How to Store, Handle, Finish, Install and Maintain Wood Doors" and with manufacturer's instructions and with applicable requirements of referenced door standard.

Identify each door with individual opening numbers which correlate with

shop drawing designation system for doors, frames and hardware, using temporary, removable or concealed markings.

1.5 PROJECT CONDITIONS

Conditioning: Do not deliver or install doors until conditions for temperature and relative humidity have been stabilized and will be maintained in storage and installation areas during remainder of construction period to comply with requirements of the following quality standard applicable to project's geographical location.

1. AWI Quality Standards including Section 100-S-3 "Moisture Content" of Architectural Woodwork Institute (AWI).

1.6 WARRANTY

Provide manufacturer's standard 1 year warranty, from the date of Substantial completion.

PART 2 PRODUCTS

2.1 MANUFACTURERS

2.1.1 Manufacturer:

Subject to compliance with requirements, provide panel wood doors of one of the following:

1. Dimension Millworks.
2. ENJO Doors and Windows.
3. Karona, Inc.
4. Maiman Company

2.02 PANEL WOOD DOORS

2.2.1 NWWDA Quality Standard:

Comply with NWWDA I.S.6 "Industry Standard for Wood Stile and Rail Doors" of National Wood Window and Door Association (NWWDA).

2.2.2 Interior Doors:

Comply with the following requirements:

1. NWWDA Grade of Doors for Transparent Finish: Premium.
2. Wood Species for Transparent Finish: American Red Oak, Quarter Sawn/Sliced.
3. Panel Configuration: Raised.
4. Minimum Raised Panel Thickness: As indicated to match existing1.625 inches.
5. Design and Layout: As indicated on Drawings, with minimum dimensions for stiles, rails, panels, and other elements complying with referenced NWWDA standard and with requirements for 90 minute fire rated door.

6. NWWDA Design Group: 2-1/4 inch, 90 Min. Rated Interior Panel Doors.
7. Panel Design: As indicated.

2.2.3 Interior Fire Doors:

Fire-rated doors with 2-1/4 inch thick stiles and rails and 1.625 inch thick raised panels.

2.3 WOOD DOOR FRAMES

Provide wood door frames of same species specified for fire-rated wood stile and rail panel doors. Wood door frames shall be in accordance with NFPA 80.

2.4 FABRICATION:

Factory-premachine fire-rated stile and rail panel wood doors for hardware; comply with NFPA 80, and with final hardware schedule, door frame shop drawings and hardware templates.

Fabricate fire-rated stile and rail panel wood doors and frames in accordance with AWI Premium Quality Standards, including manufacturer's enhanced amendments, and to UL requirements. Attach fire-rating label to door and frame.

2.5 SHOP FINISHING

Shop-finish fire-rated doors and frames in accordance with AWI Quality Standard Section 1500 to the following finish designation:

1. Grade: Premium.
2. Finish: AWI System TR-6, Catalyzed Polyurethane.
3. Staining: Match approved sample for color.
4. Effect: Open-grain finish.
5. Sheen: Satin.

PART 3 EXECUTION

3.1 EXAMINATION:

Examine openings prior to installing door frames and hanging doors.

Reject doors and frames with defects.

Do not proceed with installation until unsatisfactory conditions have been corrected.

3.2 INSTALLATION

3.2.1 Hardware:

For installation see Section 08700, BUILDERS' HARDWARE.

3.2.2 Manufacturer's Instructions:

Install stile and rail panel wood doors and frames to comply with manufacturer's instructions, applicable requirements of referenced quality standard and as indicated.

1. Install fire-rated doors to comply with NFPA 80.

3.2.3 Factory-Fitted Doors:

Align in frames for uniform clearance at each edge.

3.2.4 Factory-Finished Doors:

Restore finish before installation, if fitting or machining is required at Project site.

3.3 ADJUSTING AND PROTECTION

Operation: Rehang or replace doors which do not swing or operate freely.

Finish Doors: Refinish or replace doors damaged during installation.

Protect doors as recommended by door manufacturer to ensure that doors are without damage at time of Substantial Completion.

-- End of Section --

SECTION 08330

OVERHEAD ROLLING DOORS

PART 1 GENERAL

1.1 REFERENCES

The publications listed below form a part of this specification to the extent referenced. The publications are referred to in the text by basic designation only.

AMERICAN SOCIETY FOR TESTING AND MATERIALS (ASTM)

ASTM A 653/A 653M	(1996) Steel Sheet, Zinc-Coated (Galvanized) or Zinc-Iron Alloy-Coated (Galvannealed) by the Hot-Dip process
ASTM E 84	(1996a) Surface Burning Characteristics of Building Materials

AMERICAN SOCIETY OF HEATING, REFRIGERATING, AND AIR-CONDITIONING ENGINEERS (ASHRAE)

ASHRAE Fundament HDBK-IP	(1997) Handbook, Fundamentals I-P Edition
ASHRAE Fundament HDBK-SI	(1997) Handbook, Fundamentals SI Edition

NATIONAL ELECTRICAL MANUFACTURERS ASSOCIATION (NEMA)

NEMA ICS 2	(1993) Industrial Control and Systems Controllers, Contactors, and Overload Relays Rated Not More Than 2,000 Volts AC or 750 Volts DC
NEMA ICS 6	(1993) Industrial Control and Systems Enclosures
NEMA MG 1	(1993; Rev 1, Rev 2, Rev 3) Motors and Generators

NATIONAL FIRE PROTECTION ASSOCIATION (NFPA)

NFPA 70	(1996; Errata 96-4) National Electrical Code
NFPA 80	(1995) Fire Doors and Fire Windows

1.2 DESCRIPTION

Overhead rolling doors shall be spring counterbalanced, rolling type, with interlocking slats, complete with guides, fastenings, hood, brackets, and operating mechanisms, and shall be designed for use on openings as indicated. Fire doors shall bear the Underwriters Laboratories, Warnock Hersey, Factory Mutual or other nationally recognized testing laboratory label for the rating listed on the drawings. Each door shall be provided with a permanent label showing the manufacturer's name and address and the model/serial number of the door. Doors in excess of the labelled size shall be deemed oversize and shall be provided with a listing agency oversize label, or a listing agency oversize certificate, or a certificate signed by an official of the manufacturing company certifying that the door and operator have been designed to meet the specified requirements.

1.2.1 Wind Load Requirements

Doors and components shall be designed to withstand the minimum design wind load of 20 psf Doors shall be constructed to sustain a superimposed load, both inward and outward, equal to 1-1/2 times the minimum design wind load. The door shall support the superimposed loads for a minimum period of 10 seconds without evidence of serious damage and shall be operable after conclusion of the tests.

1.2.2 Operational Cycle Life

All portions of the door and door operating mechanism that are subject to movement, wear, or stress fatigue shall be designed to operate through a minimum number of 10 cycles per. One complete cycle of door operation is defined as when the door is in the closed position, moves to the full open position, and returns to the closed position.

1.3 SUBMITTALS

Government approval is required for submittals with a "GA" designation; submittals having an "FIO" designation are for information only. The following shall be submitted in accordance with Section 01330 SUBMITTAL PROCEDURES:

SD-01 Data

Overhead Rolling Door Unit; GAFIO.

Manufacturer's catalog data, test data, and summary of forces and loads on the walls/jambs.

SD-04 Drawings

Overhead Rolling Door Unit; GA.

Drawings showing the location of each door including schedules. Drawings shall include elevations of each door type, details and method of anchorage, details of construction, location and installation of hardware, shape and thickness of materials, details of joints and connections, and details of guides, power operators, controls, and other fittings.

SD-06 Instructions

Overhead Rolling Door Unit; FIO.

Manufacturer's preprinted installation instructions.

SD-09 Reports

Tests; FIO.

Written record of fire door drop test.

SD-13 Certificates

Fire Doors; FIO.

Oversize labels or certificates stating that the overhead rolling doors conform to requirements of this section. Certificates for oversize fire doors stating that the doors and hardware are manufactured in compliance with the requirements for doors of this type and class and have been tested and meet the requirements for the class indicated. Certificate is not required when fire door has a listing agency label or oversize label on the door bottom bar.

SD-14 Samples

Overhead Rolling Door Unit; GA.

Manufacturer's standard color samples of factory applied finishes.

SD-19 Operation and Maintenance Manuals

Operation Manual; FIO.

Maintenance and Repair Manual ; FIO.

Six copies of the system operation manual and system maintenance and repair manual for each type of door and control system, in conformance with Section 00800, SPECIAL CONTRACT REQUIREMENTS.

1.4 DELIVERY AND STORAGE

Doors shall be delivered to the jobsite wrapped in a protective covering with the brands and names clearly marked thereon. Doors shall be stored in a dry location that is adequately ventilated and free from dirt and dust, water, and other contaminants, and in a manner that permits easy access for inspection and handling.

1.5 WARRANTY

Manufacturer's standard performance guarantees or warranties that extend beyond a 1-year period shall be provided.

1.6 OPERATION AND MAINTENANCE MANUALS

Operating instructions outlining the step-by-step procedures required for motorized door and shutter operation for the overhead rolling door unit shall be provided. The instructions shall include the manufacturer's name, model number, service manual, parts list, and brief description of all equipment and their basic operating features. Maintenance instructions listing routine maintenance procedures, possible breakdowns and repairs, troubleshooting guides, and simplified diagrams for the equipment as installed shall be provided. A complete list of parts and supplies, source of supply, and a list of the high mortality maintenance parts shall be provided. Comply with further requirements specified under Section 00800, SPECIAL CONTRACT REQUIREMENTS.

PART 2 PRODUCTS

2.1 OVERHEAD ROLLING DOORS

Doors shall be surface-mounted type with guides at jambs set back a sufficient distance to clear the opening. Exterior doors shall be mounted as indicated.

2.1.1 Curtains

The curtains shall roll up on a barrel supported at the head of opening on brackets, and shall be balanced by helical torsion springs. Steel slats for doors less than 15 feet wide shall be minimum bare metal thickness of 0.0269 inches. Steel slats for doors from 15 feet wide to 21 feet wide shall be minimum bare metal thickness of 0.0329 inches. Steel slats for doors 21 feet wide and wider shall be minimum bare metal thickness of 0.0438 inches. Slats shall be of the minimum bare metal decimal thickness required for the width indicated and the wind pressure specified above. Slats for fire doors over 12 feet wide and under 20 feet wide shall be not less than 0.0329 inches steel. Slats for fire doors 20 feet wide or wider shall be not less than 0.0438 inches steel.

2.1.1.1 Insulated Curtains

The slat system shall supply a minimum R-value of 4 when calculated in accordance with ASHRAE Fundament HDBK-IP ASHRAE Fundament HDBK-SI. Slats shall be of the flat type as standard with the manufacturer. Slats shall consist of a urethane core not less than 11/16 inch thick, completely enclosed within metal facings. Exterior face of slats shall be gauge as specified for curtains. Interior face shall be not lighter than 0.0209 inches. The insulated slat assembly shall have a flame spread rating of not more than 25 and a smoke development factor of not more than 50 when tested in accordance with ASTM E 84.

2.1.2 Endlocks and Windlocks

The ends of each alternate slat for interior doors shall have steel endlocks of manufacturer's stock design. Endlocks shall be provided in accordance with manufacturer's listing on fire doors when required by test results performed by the code listing agency. In addition to endlocks, non-rated exterior doors shall have the manufacturer's standard windlocks

as required to withstand the wind load. Windlocks shall prevent the curtain from leaving guides because of deflection from specified wind pressure.

2.1.3 Bottom Bar

The curtain shall have a standard bottom bar consisting of two hot-dip galvanized steel angles for steel doors. A sensing edge shall be attached to the bottom bar of doors that are electric-power operated.

2.1.4 Guides

Guides shall be steel structural shapes or formed steel shapes, of a size and depth to provide proper clearance for operation and resistance under the design windload. Guides shall be attached to adjoining construction with fasteners recommended by the manufacturer. Spacing of fasteners shall be as required to meet the minimum design windload. Doors and guides in hazardous areas shall have static grounding.

2.1.5 Barrel

The barrel shall be steel pipe or commercial welded steel tubing of proper diameter for the size of curtain. Deflection shall not exceed 0.03 inch per foot of span. Ends of the barrel shall be closed with metal plugs, machined to fit the pipe. Aluminum plugs are acceptable on non-fire door barrels.

2.1.6 Springs

Oil tempered helical steel counter-balance torsion springs shall be installed within the barrel and shall be capable of producing sufficient torque to assure easy operation of the door curtain. Access shall be provided for spring tension adjustment from outside of the bracket without removing the hood.

2.1.7 Brackets

Brackets shall be of steel plates to close the ends of the roller-shaft housing, and to provide mounting surfaces for the hood. An operation bracket hub and shaft plugs shall have sealed prelubricated ball bearings.

2.1.8 Hoods

Hoods shall be steel with minimum bare metal thickness of 0.0209 inches formed to fit contour of the end brackets, and shall be reinforced with steel rods, rolled beads, or flanges at top and bottom edges. Multiple segment and single piece hoods shall be provided with support brackets of the manufacturer's standard design as required for adequate support.

2.1.9 Weatherstripping

Exterior doors shall be fully weatherstripped. A compressible and replaceable weather seal shall be attached to the bottom bar. Weather seal at door guides shall be continuous vinyl or neoprene, bulb or leaf type, or

shall be nylon-brush type. A weather baffle shall be provided at the lintel or inside the hood. Weatherstripping shall be easily replaced without special tools.

2.1.10 Operation

Doors shall be operated by means of electric power with auxiliary chain hoist. Equipment shall be designed and manufactured for usage in non-hazardous areas. Provide an above-ceiling hook for manual chain storage at each door.

2.1.10.1 Electric Power Operator With Auxiliary Chain Hoist Operation

Electric power operators shall be heavy-duty industrial type. The unit shall operate the door through the operational cycle life specified. The electric power operator shall be complete with electric motor, auxiliary operation, necessary means of reduction for medium-duty doors, brake, mounting brackets, push button controls, limit switches, magnetic reversing starter, and all other accessories necessary to operate components specified in other paragraphs of this section. The operator shall be so designed that the motor may be removed without disturbing the limit-switches settings and without affecting the emergency chain operator. Doors shall be provided with an auxiliary operator for immediate emergency manual operation of the door in case of electrical failure. Auxiliary operation shall be by means of galvanized endless chain extending to within 3 feet of the floor. The emergency manual operating mechanism shall be so arranged that it may be operated from the floor without affecting the settings of the limit switches. A mechanical device shall be included that will disconnect the motor from the drive operating mechanism when the auxiliary operator is used. Where control voltages differ from motor voltage, a control voltage transformer shall be provided in and as part of the electric power operator system. Control voltage shall not exceed 120 volts.

a. Motors: Drive motors shall conform to NEMA MG 1, shall be high-starting torque, reversible type, and shall be of sufficient horsepower and torque output to move the door in either direction from any position at a speed range of 6 to 8 inches per second without exceeding the rated capacity. Motors shall be suitable for across-the-line starting. Motors shall be designed to operate at full capacity over a supply voltage variation of plus or minus 10 percent of the motor voltage rating. Motors shall be provided with overload protection.

b. Controls: Control equipment shall conform to NEMA ICS 2. Enclosures shall conform to NEMA ICS 6, Type 12 (industrial use), Type 7 or 9 in hazardous locations, in accordance with NFPA 70. Exterior control stations shall be weatherproof key-operated type with corrosion-resistant cast-metal cover. Each control station shall be of the three position button type, marked "OPEN," "CLOSE," and "STOP." The "OPEN" and "STOP" controls shall be of the momentary contact type with seal-in contact. The "CLOSE" control shall be of the momentary contact type. When the door is in motion and the "STOP" control is pressed, the door shall stop instantly and remain in the stop position; from the stop position, the door shall be operable in either direction by the "OPEN" or "CLOSE" controls. Controls

shall be of the full-guarded type to prevent accidental operation. Readily adjustable limit switches shall be provided to automatically stop the doors at their fully open and closed positions.

c. Sensing Edge Device: The bottom edge of electric power operated doors shall have an electric sensing edge for non-hazardous areas that will reverse the door movement upon contact with an obstruction and cause the door to return to its full open position. The sensing edge shall not substitute for a limit switch. Exterior doors shall be provided with a combination compressible weather seal and sensing edge.

d. Electrical Work: Conduit and wiring necessary for proper operation shall be provided in conformance with the requirements of Section 16415 ELECTRICAL WORK, INTERIOR. Flexible connections between doors and fixed supports shall be made with flexible type SJO cable, except in hazardous locations where wiring shall conform to NFPA 70, as appropriate. The cable shall have a spring-loaded automatic take up reel or a coil cord equivalent device.

2.1.11 Inertia Brake

Overhead rolling door shall have a mechanical inertia brake device which will stop the door from free fall in any position, should there be a failure in the motor operator brake or roller chain drive. The unit shall be capable of being reset with a back drive action.

2.1.12 Locking

Locking for motor operated doors shall consist of self-locking gearing and optional master keyed cylinder with electrical interlock.

2.1.13 Finish

Steel slats and hoods shall be hot-dip galvanized G90 in accordance with ASTM A 653/A 653M, and shall be treated for paint adhesion and shall receive a factory baked-on finish coat. Surfaces other than slats, hood, and faying surfaces shall be cleaned and treated to assure maximum paint adherence and shall be given a factory dip or spray coat of rust inhibitive metallic oxide or synthetic resin primer. Color shall be in accordance with Section 09915 COLOR SCHEDULE.

2.2 FIRE DOORS BETWEEN NEW CONSTRUCTION AND BUILDING A

Fire rated rolling doors shall be provided at locations shown on the drawings. Fire doors shall conform to the requirements specified herein and to NFPA 80 for the class indicated. Doors shall bear the label or oversize label, or be provided with oversize certification of a recognized testing agency indicating the listed rating for the fire door. The construction details necessary for the listed rating shall take precedence over conflicting details shown or specified herein. Fire doors shall be complete with hardware, accessories, and automatic closing device. An automatic closing device shall operate upon activation of the building's fire alarm system.

Provide electric motor operation as specified above, to reset the doors after activation. Provide a key operated open/close/stop switch, surface mounted in nearby electric closets. Provide fire doors with no safety sensing edge strip.

2.3 OVERHEAD ROLLING SMOKE DOORS BETWEEN Y001 CORRIDOR AND Y020 CS EQUIPMENT

Overhead rolling smoke doors shall be complete with hardware, accessories, and automatic closing device. The automatic closing device shall operate upon activation of the building's fire alarm system.

Provide electric motor operation as specified above, to reset the doors after activation. Provide a key operated open/close/stop switch, surface mounted at locations indicated, or if not indicated, as field directed. Provide smoke doors with safety sensing edge strip as specified above under Paragraph 2.1.10.

Provide lock in bottom bar suitable for cylinder furnished under Section 08700, BUILDER'S HARDWARE.

PART 3 EXECUTION

3.1 INSTALLATION

Doors shall be installed in accordance with approved detail drawings and manufacturer's instructions. Anchors and inserts for guides, brackets, motors, switches, hardware, and other accessories shall be accurately located. Upon completion, doors shall be free from warp, twist, or distortion. Doors shall be lubricated, properly adjusted, and demonstrated to operate freely. Fire doors shall be installed in conformance with the requirements of NFPA 80 and the manufacturer's instructions.

3.2 TESTS

The fire doors shall be drop tested in accordance with NFPA 80 to show proper operation and full automatic closure and shall be reset in accordance with the manufacturer's instructions. A written record of initial test shall be provided to the Contracting Officer.

-- End of Section --

SECTION 08331

METAL ROLLING COUNTER DOORS

PART 1 GENERAL

1.1 REFERENCES

The publications listed below form a part of this specification to the extent referenced. The publications are referred to in the text by basic designation only.

AMERICAN SOCIETY FOR TESTING AND MATERIALS (ASTM)

ASTM A 653/A 653M	(1997) Steel Sheet, Zinc-Coated (Galvanized) or Zinc-Iron Alloy-Coated (Galvannealed) by the Hot-Dip Proces

1.2 GENERAL

Rolling counter doors shall be of the type, size, and design indicated on the drawings, and shall be the standard product of a manufacturer regularly engaged in the production of rolling counter doors. Each door shall be provided with a permanent label showing the manufacturer's name and address and the model number of the door.

1.3 SUBMITTALS

Government approval is required for submittals with a "GA" designation; submittals having an "FIO" designation are for information only. The following shall be submitted in accordance with Section 01330 SUBMITTAL PROCEDURES:

SD-01 Data

Rolling Counter Door Unit; GA.

Manufacturer's descriptive data and catalog cuts.

SD-04 Drawings

Rolling Counter Door Unit; GA.

Drawings showing elevations of each door type, details of anchorage, details of construction, location and description of hardware, shape and thickness of materials, details of joints and connections, and details of guides and fittings. A schedule showing the location of each counter door shall be included with the drawings.

SD-06 Instructions

Rolling Counter Door Unit; FIO.

Manufacturer's preprinted installation and cleaning instructions.

SD-19 Operation and Maintenance Manuals

Rolling Counter Door Unit; FIO.

Six complete copies of maintenance instructions listing routine maintenance procedures, possible breakdowns and repairs, troubleshooting guides, and simplified diagrams for the equipment as installed. Spare parts data for each different item of material and equipment specified shall be supplied not later than 14 days prior to the date of beneficial occupancy. The data shall include a complete list of parts and supplies, with current unit prices and source of supply, and a list of the parts recommended by the manufacturer to be replaced after 1 year of service.

1.4 DELIVERY AND STORAGE

Rolling counter doors shall be delivered to the jobsite wrapped in a protective covering with the brands and names clearly marked thereon. Rolling counter doors shall be stored in accordance with the manufacturer's instructions in a dry location that is adequately ventilated and free from dust, water, or other contaminants, and in a manner that permits easy access for inspecting and handling. Doors shall be handled carefully to prevent damage. Damaged items that cannot be restored to like-new condition shall be replaced.

1.5 WARRANTY

Manufacturer's standard performance guarantees or warranties that extend beyond a 1 year period shall be provided.

PART 2 PRODUCTS

2.1 BASIC COMPONENTS

2.1.1 Curtain

The curtain shall be fabricated of 22 gauge galvanized steel slats conforming to ASTM A 653/A 653M, Coating Designation G90 as specified. Thickness of slat material shall be as required by width of opening or as required by specified fire-rating. Slats shall be approximately 1-1/4 to 1-1/2 inch wide with a depth of crown of 1/2 inch. Alternate slats shall be fitted with end locks to maintain curtain alignment. Bottom of curtain shall be provided with angle or tubular bar reinforcement matching the curtain, and fitted with a resilient bottom seal.

2.1.2 Jamb Guides

Guides shall be of 13 gauge minimum thickness galvanized steel angles conforming to ASTM A 653/A 653M, Coating Designation G90.

2.1.3 Counterbalance Shaft Assembly

The curtain shall be coiled around a steel tube of sufficient thickness and diameter to prevent deflection exceeding 0.03 inch per foot. The barrel shall contain oil tempered helical steel torsion springs capable of sufficient torque to counterbalance the weight of the curtain. Springs shall be calculated to provide a minimum of 7,500 operating cycles (one complete cycle of door operation will begin with the door in the closed position, move to the full open position and return to the closed position).

2.1.4 Brackets

Brackets shall be a minimum 12 gauge thickness steel if flat plate, or 16 gauge thickness if there are a minimum of 3 returns of 3/4 inch width.

2.1.5 Hood

The hood shall be of 24 gauge galvanized steel conforming to ASTM A 653/A 653M, Coating Designation G90.

2.1.6 Locks

The curtain shall be locked at each side of the bottom bar by an integral slide bolt with cylinder lock and turn-handle.

Provide lock in bottom bar suitable for cylinder furnished under Section 08700, BUILDER'S HARDWARE.

2.2 ROLLING COUNTER SMOKE DOOR (NON-RATED)

All rolling metal counter doors shall be rolling counter smoke doors conforming to the requirements specified herein and shall be constructed of galvanized steel curtains, guides and hood components.

Rolling counter smoke doors shall be complete with hardware, accessories, and automatic closing device that shall close door upon activation of the building fire alarm system. Rolling counter doors shall be provided with perimeter smoke and draft control gasketing.

2.3 OPERATION

2.3.1 Manual Operation

The curtain shall be operated by means of manual push-up with lift handles or continuous full width lift bar.

2.4 FINISH

Steel slats and hoods shall be hot-dip galvanized G90 in accordance with ASTM A 653/A 653M, and shall be treated for paint adhesion and shall receive a factory baked-on finish coat. Surfaces other than slats, hood, and faying surfaces shall be cleaned and treated to assure maximum paint adherence and shall be given a factory dip or spray coat of rust inhibitive metallic oxide or synthetic resin primer. Color shall be in accordance

with Section 09915 COLOR SCHEDULE.

PART 3 EXECUTION

3.1 INSTALLATION

Doors shall be installed in accordance with approved detail drawings and manufacturer's instructions. Anchors and inserts for guides, brackets, hardware, and other accessories shall be accurately located. Upon completion, doors shall be free from warp, twist, or distortion. Doors shall be lubricated, properly adjusted, and demonstrated to operate freely.

-- End of Section --

SECTION 08353

OPERABLE PARTITIONS

PART 1 GENERAL

1.1 REFERENCES

The publications listed below form a part of this specification to the extent referenced. The publications are referred to in the text by basic designation only.

AMERICAN SOCIETY FOR TESTING AND MATERIALS (ASTM)

ASTM E 84	(1996a) Surface Burning Characteristics of Building Materials
ASTM E 90	(1996) Laboratory Measurement of Airborne Sound Transmission Loss of Building Partitions
ASTM E 413	(1987; R 1994) Rating Sound Insulation
ASTM E 557	(1993) Architectural Application and Installation of Operable Partitions
ASTM F 793	(1993) Standard Classification of Wallcovering by Durability Characteristic

1.2 SUBMITTALS

Government approval is required for submittals with a "GA" designation; submittals having an "FIO" designation are for information only. The following shall be submitted in accordance with Section 01330 SUBMITTAL PROCEDURES:

SD-01 Data

Operable Partitions; GA.

Manufacturer's descriptive data, performance charts, catalog cuts, and installation instructions.

SD-04 Drawings

Operable Partitions; GA.

Drawings containing complete schematic diagrams and details required to

demonstrate that the system has been coordinated and will properly function as a unit. Drawings shall show proposed layout and anchorage of equipment and appurtenances, and equipment relationship to other parts of the work including clearances for maintenance and operation.

SD-13 Certificates

Materials; Operable Partitions; FIO.

Certificate attesting that the materials meet the requirements specified and that partitions have specified acoustical and flame retardant properties, as determined by test.

SD-14 Samples

Operable Partitions; GA.

Manufacturer's standard color samples of specified surfaces and finishes.

SD-19 Operation and Maintenance Manuals

Operable Partitions; FIO.

Six complete copies of maintenance instructions explaining routine maintenance procedures including inspection, adjustments, lubrication, and cleaning. The instructions shall list possible breakdown, methods of repair, and a troubleshooting guide. The instructions shall include equipment layout and diagrams of the system as installed.

1.3 DELIVERY AND STORAGE

Materials shall be delivered to the jobsite in the manufacturer's original, unopened packages and shall be stored with protection from the weather, humidity and temperature variations, dirt and dust, or other contaminants.

1.4 WARRANTY

Manufacturer's standard performance guarantees or warranties that extend beyond a 1 year period shall be provided.

PART 2 PRODUCTS

2.1 GENERAL

Operable partitions shall consist of paired top hung, ball bearing, omni-directional carriers which support individual modular panels. Panels shall be not more than 4 feet wide, except for end closure panels, and shall be full height to track. Panels shall have a protective edge which fully surrounds and protects the edges of the surface material. Panels shall be constructed of minimum 16 gauge thick steel frames with minimum 22 gauge thick face panels spot welded to the frame. Panel shall be 3 in. thick and composition shall be designed to provide an STC rating of not less than 50 in accordance with ASTM E 90 and ASTM E 413. Doors shall have vinyl sweep top seals which compress against the bottom of the top track.

Bottom seals shall be a vinyl sweep mechanical seal which will expand in place or panels which will be lowered by self-contained operating device. Panels shall lock in place to form a stable, rigid partition. Panels shall be surfaced with vinyl covering. Partition finish shall have a flame spread rating of not more than 25 in accordance with ASTM E 84. Doors shall be manually operated.

2.2 ACCEPTABLE MANUFACTURERS

Provide products of one of the following manufacturers if they meet or exceed the requirements of these specifications:

1. Holcomb and Hoke Manufacturing Co.
2. Hough Manufacturing Co.
3. Modernfold Division of American Standard Co.

2.3 PRODUCTS

Material and equipment shall be the standard or modified products of a manufacturer regularly engaged in the manufacture of such products and shall essentially duplicate items that have been in satisfactory use for at least 2 years prior to bid opening. Equipment shall be supported by a service organization that is, in the opinion of the Contracting Officer, reasonably convenient to the site. Door and partition finishes shall have a Class A rating when tested in accordance with ASTM E 84.

Provide top supported series of panels which move in overhead track and stack in wall pockets.

1. Configuration: Individual panels, omni-directional (90 degree intersections).
2. Operation: Manually operated.

2.3.1 Panel Model:

Provide Modernfold Model 931 with further modifications as specified herein, or equal from another specified manufacturer.

2.3.2 Panel Finish:

The vinyl coated fabric shall conform to ASTM F 793, Category V, Type II Medium duty. Covering shall have textured design. Color as specified under Section 009915, COLOR SCHEDULE.

2.3.3 Sound Seals:

Provide interlocking, resilient astragal seals between panels; continuous contact seal at head; and automatic bottom seal which drops when panel is locked into jamb, designed for 1 in. nominal clearance at floor.

2.3.4 Sound Seals:

Provide interlocking, resilient astragal seals between panels; continuous contact seal at head; and adjustable, manually operated bottom seal,

designed to accommodated floor deflection of irregularities up to 2-1/2 in. clearance.

2.3.5 Track and Suspension System:

Provide heavy-duty aluminum track; heavy duty trolley carrier assemblies with ball bearing wheels; bolt trolley assemblies to panels.

1. Carriers: Each individual panel shall be supported by two double-horizontal wheel-type carriers. Bearing surfaces of the wheels shall be Delrin or equal. Panel carriers shall each be capable of supporting twice the panel weight.

2. Track: Provide extruded aluminum tracks with minimum wall thickness of 3/16 in. Exposed to view surfaces of tracks shall be factory-finished with a white baked-enamel finish. Track sections shall be provided in the maximum lengths practicable, not less than 6 feet long except for narrow ends of runs where short length is required. Suitable joint devices such as interlocking keys shall be provided at each joint to provide permanent alignment of track.

3. Suspension System: Provide all necessary hanger rods, track interfaces, and miscellaneous items as required to hang tracks from structural steel.

2.3.6 Pocket Doors:

Provide manufacturer's standard or modified pocket door assemblies configured to close off storage pockets when partitions are are stored, and when extended, and capable of resisting the end of the wall thrust from the retractable jamb trim.

2.3.7 Pass Doors:

Pass doors shall be ADA approved, the same thickness, construction, and finish as the operable partitions. Doors shall be provided with positive latch and flush pulls for panic operation. Doors shall be equipped with adjustable floor seals. Doors shall be nominal 3 feet wide by height standard with the manufacturer and handed as shown.

2.3.8 Miscellaneous Items:

Provide wall receiver/trim and pocket end retractable jamb trim at end of operable partition.

PART 3 EXECUTION

3.1 INSPECTION

The Installer shall examine substrates, supports, and conditions under which this work is to be performed and notify Contractor, in writing, of conditions detrimental to the proper completion of the work. Do not proceed with work until unsatisfactory conditions are corrected. Beginning

of the work means Installer accepts both substrates and conditions.

3.2 INSTALLATION/ERECTION

Install folding panel partitions and tracks in strict accordance with approved shop drawings and manufacturer's printed instructions and recommendations. Install level and true, and securely anchor track to supporting construction above. Comply with applicable requirements of ASTM E 557.

Field Measurements: Take accurate field measurements before preparation of shop drawings and fabrication. Do not delay job progress.

Install track in as long a lengths as possible and with flush, hairline joints.

Install panels so that vertical joints are plumb, flush and light tight.

3.3 ADJUSTING, CLEANING AND PROTECTION

Adjust operating parts and hardware to work easily, smoothly, and correctly without warping or binding.

Repair minor damage to eliminate evidence of repair. Remove and replace work which cannot be satisfactorily repaired.

Clean exposed surfaces using materials and methods recommended by manufacturer of material or product being cleaned. Remove and replace work that cannot be successfully cleaned.

Provide temporary protection to ensure work being without damage or deterioration at time of final acceptance. Remove protections and reclean as necessary immediately before final acceptance.

-- End of Section --

SECTION 08520

ALUMINUM WINDOWS

PART 1 GENERAL

1.1 REFERENCES

The publications listed below form a part of this specification to the extent referenced. The publications are referred to in the text by basic designation only.

AMERICAN ARCHITECTURAL MANUFACTURERS ASSOCIATION (AAMA)

AAMA AAMA/NWWDA 101 I.S.2	(1997) Voluntary Specifications for Aluminum, Vinyl (PVC) and Wood Windows and Glass Doors
AAMA 1503.1	(1988) Voluntary Test Method for Thermal Transmittance and Condensation Resistance of Windows, Doors and Glazed Wall Sections

AMERICAN SOCIETY FOR TESTING AND MATERIALS (ASTM)

ASTM E 283	(1991) Determining the Rate of Air Leakage Through Exterior Windows, Curtain Walls, and Doors Under Specified Pressure Differences Across the Specimen
ASTM E 330	(1990) Structural Performance of Exterior Windows, Curtain Walls, and Doors by Uniform Static Air Pressure Difference
ASTM E 547	(1996) Water Penetration of Exterior Windows, Curtain Walls, and Doors by Cyclic Static Air Pressure Differentia

1.2 WINDOW PERFORMANCE

Aluminum windows shall be designed to meet the following performance requirements. Testing requirements shall be performed by an independent testing laboratory or agency.

1.2.1 Structural Performance

Structural test pressures on window units shall be for positive load (inward) and negative load (outward) in accordance with ASTM E 330. After testing, there shall be no glass breakage, permanent damage to fasteners, hardware parts, support arms or actuating mechanisms or any other damage

which could cause window to be inoperable. There shall be no permanent deformation of any main frame, sash or ventilator member in excess of the requirements established by AAMA AAMA/NWWDA 101 I.S.2 for the window types and classification specified in this section.

1.2.2 Air Infiltration

Air infiltration shall not exceed the amount established by AAMA AAMA/NWWDA 101 I.S.2 for each window type when tested in accordance with ASTM E 283.

1.2.3 Water Penetration

Water penetration shall not exceed the amount established by AAMA AAMA/NWWDA 101 I.S.2 for each window type when tested in accordance with ASTM E 547.

1.2.4 Thermal Performance

Thermal transmittance for thermally broken aluminum windows with insulating glass shall not be less than U-Value 0.62 BTU/hrs/sq.ft./degree F., when tested in accordance with AAMA 1503.1.

1.3 SUBMITTALS

Government approval is required for submittals with a "GA" designation; submittals having an "FIO" designation are for information only. The following shall be submitted in accordance with Section 01330 SUBMITTAL PROCEDURES:

SD-01 Data

Aluminum Windows; FIO.

Manufacturer's descriptive data and catalog cut sheets.

SD-04 Drawings

Aluminum Windows; GA.

Drawings indicating elevations of window, rough-opening dimensions for each type and size of window, full-size sections, thicknesses of metal, fastenings, methods of installation and anchorage, connections with other work, type of wall construction, size and spacing of anchors, method of glazing, types and locations of operating hardware, mullion details, weatherstripping details, window cleaner anchor details, and window schedules showing locations of each window type.

SD-06 Instructions

Aluminum Windows; FIO.

Manufacturer's preprinted installation instructions and cleaning instructions.

SD-09 Reports

Aluminum Windows; FIO.

Reports for each type of aluminum window attesting that identical windows have been tested and meet all performance requirements established under paragraph WINDOW PERFORMANCE.

SD-13 Certificates

Aluminum Windows; FIO.

Certificates stating that the aluminum windows are AAMA certified conforming to requirements of this section. Labels or markings permanently affixed to the window will be accepted in lieu of certificates.

SD-14 Samples

Aluminum Windows; GA.

Manufacturer's standard color samples of the specified finishes.

1.4 QUALIFICATION

Window manufacturer shall specialize in designing and manufacturing the type of aluminum windows specified in this section, and shall have a minimum of 10 years of documented successful experience. Manufacturer shall have the facilities capable of meeting contract requirements, single-source responsibility and warranty.

1.5 MOCK-UPS

Before fabrication, full-size mock-up of one window unit complete with glass and AAMA certification label will be required for review of window construction.

1.6 DELIVERY AND STORAGE

Aluminum windows shall be delivered to project site and stored in accordance with manufacturer's recommendations. Damaged windows shall be replaced with new windows.

1.7 WARRANTY

Manufacturer's standard performance guarantees or warranties that extend beyond a 1 year period shall be provided.

PART 2 PRODUCTS

2.1 GENERAL

Drawings and Specifications are based upon Wausau 2250 Series windows, with a 2-1/4 in. deep, 1/8 in. thick minimum extrusion, thermally-broken windows. Site line is 2-1/4 in. Provide these windows, or approved equal

that comply with specified requirements.

2.2 ALUMINUM WINDOW TYPES

Aluminum windows shall consist of complete units including sash, glass, and frame. Windows shall conform to AAMA AAMA/NWWDA 101 I.S.2. Windows shall be double-glazed and shall have a minimum condensation resistance factor of 46 when tested in accordance with AAMA 1503.1.

2.2.1 Fixed Windows

Aluminum fixed (F) windows shall conform to AAMA AAMA/NWWDA 101 I.S.2 F-HC65 type, non-operable glazed frame, complete with provisions for reglazing in the field.

2.2.2 Casement Windows

Aluminum casement (C) windows shall conform to AAMA AAMA/NWWDA 101 I.S.2 Designation C-C55 type with ventilators which swing on side jamb. Hinges shall be type. Operators shall be bottom push-type bar operators with positive stops/hold opens. Cam-latch locking devices shall be provided to secure ventilators tightly in the frame in the closed position.

2.3 INSECT SCREENS

Insect screens shall be aluminum window manufacturer's standard design, and shall be provided at all operable windows. Insect screens shall be fabricated of extruded aluminum frames and (18 x 16) stainless steel mesh screening with minimum wire diameter of 0.016 in.

2.4 ACCESSORIES

2.4.1 Fasteners

Fastening devices shall be window manufacturer's standard design made from aluminum, stainless steel, cadmium-plated steel, nickel/chrome-plated steel in compliance with AAMA AAMA/NWWDA 101 I.S.2. Self-tapping sheet metal screws will not be acceptable for material thicker than 1/16 inch.

2.4.2 Window Anchors

Anchoring devices for installing windows shall be made of aluminum, cadmium-plated steel, stainless steel, or zinc-plated steel conforming to AAMA AAMA/NWWDA 101 I.S.2. Anchors shall be designed to engage the frame extrusion, and to transfer loads to the back-up construction. Mounting clips shall be separate from from Snap-On-Cover clip angles.

2.4.3 Extruded Aluminum Sills

Provide extruded aluminum sills with 4 in. exposure, unless indicated otherwise on Drawings. Sill starter extrusions shall be configured to provide an overall site line of 4 in. at sill, flush interior and exterior faces to window framing members, and of the same extrusion characteristics as window frame members.

2.4.4 Snap-On Covers

Snap-On-Cover interior trim of extruded aluminum with extrusion thickness of a minimum .062 in.. Snap-On-Covers shall be 1 in. high and 2 in. deep with extruded aluminum clip angles at no more than 12 in. on center. Snap-On-Cover shall extend full perimeter of window units.

2.4.5 PVC Sealant Backers

PVC sealant backers of 1/8 in. thick PVC configured to engage the frame and starter sill extrusions shall be provided. Sealant backers shall extend the full length of all window unit perimeter frame members, and be cut to tightly fit around mounting clips.

2.5 GLASS AND GLAZING

Aluminum windows shall be designed for inside glazing, field glazing, and for glass types scheduled on drawings and specified in Section 08810 GLASS AND GLAZING. Units shall be complete with glass and glazing provisions to meet AAMA AAMA/NWWDA 101 I.S.2. Glazing material shall be compatible with aluminum, and shall not require painting.

2.6 FINISH

Comply with NAAMM "Metal Finishes Manual" for recommendations relative to applying and designating finishes.

Finish designations prefixed by AA conform to the system established by the Aluminum Association for designating aluminum finishes.

Finish aluminum windows to match other aluminum components on the project, including curtain wall framing; louvers; and exterior metal wall panels.

High-Performance Organic Coating Finish: AA-C12C42R1x (Chemical Finish: cleaned with inhibited chemicals; Chemical Finish: acid chromate-fluoride-phosphate conversion coating; Organic Coating: as specified below). Prepare, pretreat, and apply coating to exposed metal surfaces to comply with coating and resin manufacturer's instructions.

Fluoropolymer 3-Coat Coating System: Provide 3-coat, thermocured, metallic Finnish system composed of specially formulated inhibitive primer, fluoropolymer color coat, and clear fluoropolymer topcoat, with both color coat and clear topcoat containing not less than 70 percent polyvinylidene fluoride resin by weight; complying with AAMA 605.2. Coating shall be equal to PPG Duranar XL.

2. Color and Gloss: As indicated in Section 09915, COLOR SCHEDULE.

2.6.1 Salt Spray Test

A sample of the sheets shall withstand a salt spray test for a minimum of

3000 hours in accordance with ASTM B 117, including the scribe requirement in the test. Immediately upon removal of the panel from the test, the coating shall receive a rating of not less than 8F, few no. 8 blisters, as determined by ASTM D 714.

2.6.2 Formability Test

When subjected to testing in accordance with ASTM D 522 Method B, 1/8 inch diameter mandrel, the coating film shall show no evidence of fracturing to the naked eye.

2.6.3 Accelerated Weathering, Chalking Resistance and Color Change

A sample of the sheets shall be tested in accordance with ASTM D 4587. The coating shall withstand the weathering test without cracking, peeling, blistering, loss of adhesion of the protective coating, or corrosion of the base metal. Protective coating that can be readily removed from the base metal with tape in accordance with ASTM D 3359, Test Method B, shall be considered as an area indicating loss of adhesion. Following the accelerated weathering test, the coating shall have a chalk rating not less than No. 8 in accordance with ASTM D 4214 test procedures, and the color change shall not exceed 5 CIE or Hunter Lab color difference (delta E) units in accordance with ASTM D 2244. For sheets required to have a low gloss finish, the chalk rating shall be not less than No. 6 and the color difference shall be not greater than 7 units.

2.6.4 Humidity Test

When subjected to a humidity cabinet test in accordance with ASTM D 2247 for 3000 hours, a scored panel shall show no signs of blistering, cracking, creepage or corrosion.

2.6.5 Impact Resistance

Factory-painted sheet shall withstand direct and reverse impact in accordance with ASTM D 2794 0.500 inch diameter hemispherical head indenter, equal to 1.5 times the metal thickness in mils, expressed in inch-pounds, with no loss of adhesion.

2.6.6 Abrasion Resistance Test

When subjected to the falling sand test in accordance with ASTM D 968, Method A, the coating system shall withstand a minimum of 170 - 220 liters of sand before the appearance of the base metal. The term "appearance of base metal" refers to the metallic coating on aluminum base metal.

PART 3 EXECUTION

3.1 INSTALLATION

Aluminum windows shall be installed in accordance with approved shop drawings and manufacturer's published instructions. Aluminum surfaces in contact with masonry, concrete, wood and dissimilar metals other than stainless steel, zinc, cadmium or small areas of white bronze, shall be

protected from direct contact using protective materials recommended by AAMA AAMA/NWWDA 101 I.S.2. The completed window installation shall be watertight in accordance with Section 07900 JOINT SEALING. Glass and glazing shall be installed in accordance with requirements of this section and Section 08810 GLASS AND GLAZING.

3.2 ADJUSTMENTS AND CLEANING

3.2.1 Cleaning

Aluminum window finish and glass shall be cleaned on exterior and interior sides in accordance with window manufacturer's recommendations. Alkaline or abrasive agents shall not be used. Precautions shall be taken to avoid scratching or marring window finish and glass surfaces.

-- End of Section --

SECTION 08700

BUILDERS' HARDWARE

PART 1 GENERAL

1.1 REFERENCES

The publications listed below form a part of this specification to the extent referenced. The publications are referred to in the text by basic designation only.

AMERICAN SOCIETY FOR TESTING AND MATERIALS (ASTM)

ASTM E 283	(1991) Determining the Rate of Air Leakage Through Exterior Windows, Curtain Walls and Doors Under Specified Pressure Differences Across the Specimen

BUILDERS HARDWARE MANUFACTURERS ASSOCIATION (BHMA)

BHMA-01	(Effective thru Jun 1998) Directory of Certified Locks & Latches
BHMA-02	(Effective thru Jul 1997) Directory of Certified Door Closers
BHMA-03	(Effective thru Jul 1997) Directory of Certified Exit Devices
BHMA ANSI/BHMA A156.1	(1997) Butts and Hinges
BHMA ANSI/BHMA A156.2	(1996) Bored and Preassembled Locks and Latches
BHMA ANSI/BHMA A156.3	(1994) Exit Devices
BHMA ANSI/BHMA A156.4	(1992) Door Controls - Closers
BHMA ANSI/BHMA A156.5	(1992) Auxiliary Locks & Associated Products
BHMA ANSI/BHMA A156.6	(1994) Architectural Door Trim
BHMA ANSI/BHMA A156.7	(1988) Template Hinge Dimensions
BHMA ANSI/BHMA A156.8	(1994) Door Controls - Overhead Stops and Holders

BHMA ANSI/BHMA A156.13	(1994) Mortise Locks & Latches
BHMA ANSI/BHMA A156.15	(1995) Closer Holder Release Devices
BHMA ANSI/BHMA A156.16	(1989) Auxiliary Hardware
BHMA ANSI/BHMA A156.17	(1993) Self Closing Hinges & Pivots
BHMA ANSI/BHMA A156.18	(1993) Materials and Finishes
BHMA ANSI/BHMA A156.21	(1996) Thresholds

DOOR AND HARDWARE INSTITUTE (DHI)

DHI-03	(1989) Keying Systems and Nomenclature
DHI-04	(1976) Recommended Locations for Builders' Hardware for Custom Steel Doors and Frames
DHI 05	(1990) Recommended Locations for Architectural Hardware for Standard Steel Doors and Frames
DHI-A115.1G	(1994) Installation Guide for Doors and Hardware
DHI A115-W	(Varies) Wood Door Hardware Standards (Incl All5-W1 thru A115-W9)

NATIONAL FIRE PROTECTION ASSOCIATION (NFPA)

NFPA 80	(1999) Fire Doors and Fire Windows
NFPA 101	(1997; Errata 97-1) Life Safety Code
NFPA 105	(1993) Installation of Smoke-Control Door Assemblies

1.2 SUBMITTALS

Government approval is required for submittals with a "GA" designation; submittals having an "FIO" designation are for information only. The following shall be submitted in accordance with Section 01330 SUBMITTAL PROCEDURES:

SD-01 Data

Hardware and Accessories; GA.

Manufacturer's descriptive data, technical literature, catalog cuts, and installation instructions. Spare parts data for locksets, exit devices, closers, electric locks, electric strikes, electro-magnetic closer holder release devices, and electric exit devices, after approval of the detail drawings, and not later than 3 month(s) prior to the date of beneficial

occupancy. The data shall include a complete list of parts and supplies, with current unit prices and source of supply.

SD-04 Drawings

Hardware Devices; GA.

Detail drawings for hardware devices for computerized keying systems, magnetic cards, keyless push button access control systems, and other electrical hardware devices showing complete wiring and schematic diagrams and other details required to demonstrate proper function of units.

SD-07 Schedules

Hardware Schedule; GA.

Hardware schedule listing all items to be furnished. The schedule shall include for each item: the quantities; manufacturer's name and catalog numbers; the ANSI number specified, sizes; detail information or catalog cuts; finishes; door and frame size and materials; location and hardware set identification cross-references to drawings; corresponding reference standard type number or function number from manufacturer's catalog if not covered by ANSI or BHMA; and list of abbreviations and template numbers.

Keying Schedule; GA.

Keying schedule developed in accordance with DHI-03, after the keying meeting with the user.

SD-13 Certificates

Hardware and Accessories; GA.

The hardware manufacturer's certificates of compliance stating that the supplied material or hardware item meets specified requirements. Each certificate shall be signed by an official authorized to certify in behalf of the product manufacturer and shall identify quantity and date or dates of shipment or delivery to which the certificates apply. A statement that the proposed hardware items appear in BHMA-01, BHMA-02 and BHMA-03 directories of certified products may be submitted in lieu of certificates.

1.3 PREDELIVERY CONFERENCE

Upon approval of the Hardware Schedule, the construction Contractor shall arrange a conference with the hardware supplier, Contracting Officer and the using agency to determine keying system requirements. Location of the key control storage system, set-up and key identification labeling will also be determined.

1.4 DELIVERY, STORAGE, AND HANDLING

Hardware shall be delivered to the project site in the manufacturer's original packages. Each article of hardware shall be individually packaged in the manufacturer's standard commercial carton or container, and shall be

properly marked or labeled to be readily identifiable with the approved hardware schedule. Each change key shall be tagged or otherwise identified with the door for which its cylinder is intended. Where double cylinder functions are used or where it is not obvious which is the key side of a door, appropriate instructions shall be included with the lock and on the hardware schedule. Manufacturer's printed installation instructions, fasteners, and special tools shall be included in each package.

1.5 SPECIAL TOOLS

Special tools, such as those supplied by the manufacturer, unique wrenches, and dogging keys, shall be provided as required to adjust hardware items.

1.6 WARRANTY

Manufacturer's standard performance guarantees or warranties that extend beyond a one year period shall be provided.

1.7 OPERATION AND MAINTENANCE MANUALS

Six complete copies of maintenance instructions listing routine maintenance procedures, possible breakdowns and repairs, and troubleshooting guides shall be provided. The instructions for electric locks, electric strikes, electro-magnetic closer holder release devices, and electric exit devices shall include simplified diagrams as installed.

PART 2 PRODUCTS

2.1 GENERAL HARDWARE REQUIREMENTS

Hardware shall conform to the requirements specified herein and the HARDWARE SETS listing at the end of this section. Hardware set numbers correspond to the set numbers shown on the drawings.

2.2 TEMPLATES

Requirements for hardware to be mounted on metal doors or metal frames shall be coordinated between hardware manufacturer and door or frame manufacturer by use of templates and other information to establish location, reinforcement required, size of holes, and similar details. Templates of hinges shall conform to BHMA ANSI/BHMA A156.7.

2.3 HINGES

2.3.1 Hinges and Pivots:

Hinges shall conform to BHMA ANSI/BHMA A156.1, 4-1/2 by 4-1/2 inches unless otherwise specified. Construct loose pin hinges for exterior doors and reverse-bevel interior doors so that pins will be nonremovable when door is closed.

a. Number of hinges or pivots per door: Two hinges or pivots shall be provided for doors up to and including five feet in height, and an additional hinge for each 2-1/2 feet, or fraction thereof, of

the height of the door.

b. Hinges for exterior doors (inswinging and outswinging) shall be ANSI A2101 anti-friction bearings, both lateral and vertical, and barrel diameter of 11/16 inch, 5 inch x 4-1/2 inch, NRP.

c. Hinges for Interior Doors shall be ANSI A 8100 Series, sized as follows:

Door Thickness	Door Width	Hinge Weight	Hinge Height
1-3/4 in.	Under 39 in.	Regular Weight .540 Barrel Dia.	4-1/2 in.
1-3/4 in.	39 in. and Over	Regular Weight .690 Barrel Dia.	4-1/2 in.

Width of hinges shall be determined by trim conditions.

d. Hinges shall be three-knuckle design, equipped with full radial trust lateral bearing assemblies. The bearing assemblies shall be permanently lubricated and sealed. All hinges shall have positive non-rising pins and a hole in the bottom tip for easy pin removal. Hinges shall have flush tips. Pins shall be through-hardened and polished stainless steel.

e. Electric conductor hinges shall be equal to above, modified with 4-wire leads.

f. Outswing interior lockable doors shall have non-removable pins (NRP).

2.3.2 Spring Hinges

Spring hinges shall conform to BHMA ANSI/BHMA A156.17.

2.3.3 Electric Hinges

Electric hinges shall conform to BHMA ANSI/BHMA A156.1 with modification of added electric wires to insure correct operation of electric hardware items.

2.4 LOCKS AND LATCHES

To the maximum extent possible, locksets, latchsets and deadlocks, and all components thereof, including cylinders and removable cores, shall be the products of a single manufacturer. Lock fronts for double-acting doors shall be rounded. Strikes for wood frames and pairs of wood doors shall be furnished with wrought boxes.

2.4.1 Mortise Lock and Latchsets

Mortise lock, latchsets, and strikes shall be series 1000 and shall conform to BHMA ANSI/BHMA A156.13, operational Grade 1. Strikes for security doors shall be rectangular without curved lip. Mortise type locks and latches

for doors 1-3/4 inches thick and over shall have adjustable bevel fronts or otherwise conform to the shape of the door. Mortise locks shall have armored fronts.

2.4.2 Bored Lock and Latchsets

Bored lock, latchsets, and strikes shall be series 4000 and shall conform to BHMA ANSI/BHMA A156.2, Grade 1. Bored type locks and latches for doors 1-3/8 inches thick and over shall have adjustable bevel fronts or otherwise conform to the shape of the door. Lever handle trim for both mortise locks and panic devices shall be equal to Arrow HSL, Sargent LNH or Falcon SG.

2.4.3 Lever Handle Trim:

Lever handle trim for both mortise locks and panic devices shall be equal to Arrow HAL; Sargent LNH; or Falcon SG.

2.4.4 Electro-Mechanical Locks

Electro-mechanical locks shall allow for locking or unlocking of doors from a remote location. Locks shall be fail safe mode (unlocked when power is off). Locks shall be mortise series conforming to BHMA ANSI/BHMA A156.13 manufactured electro-mechanical locks conforming to BHMA ANSI/BHMA A156.13 or BHMA ANSI/BHMA A156.2 test standards. In hazardous locations, products shall use safe power supplies or be pneumatic.

2.4.5 Auxiliary Locks and Associated Products

Bored and mortise dead locks and dead latches, narrow style dead locks and dead latches, rim latches, dead latches, and dead bolts, and electric strikes shall conform to BHMA ANSI/BHMA A156.5. Strike boxes shall be furnished with dead bolt and latch strikes for Grade 1. Electric strikes shall be locked or unlocked from a remote location in fail safe or fail secured mode as scheduled. Electric strike for rated openings shall be fail secured.

2.4.6 Lock Cylinders (Mortise, Rim and Bored)

Lock cylinders shall comply with BHMA ANSI/BHMA A156.5. Lock cylinder shall have not less than seven pins. Cylinders shall have key removable type cores. An extension of the existing keying system shall be provided. A construction master keying system and Construction interchangeable cores shall be provided. Disassembly of knob or lockset shall not be required to remove core from lockset. All locksets, lockable exit devices, and padlocks shall accept same interchangeable cores.

2.4.7 Lock Trim

Lock trim shall be cast, forged, or heavy wrought construction of commercial plain design. In addition to meeting the test requirement of BHMA ANSI/BHMA A156.2 or BHMA ANSI/BHMA A156.13, knobs, lever handles, roses, and escutcheons shall be 0.050 inch thick, if unreinforced. If reinforced, the outer shell shall be 0.035 inch thick and the combined thickness shall be 0.070 inch except that knob shanks shall be 0.060 inch

thick. Lever handles shall be of plain design with ends returned to no more than 1/2 inch from the door face.

2.5 EXIT DEVICES AND EXIT DEVICE ACCESSORIES

Exit devices and exit device accessories shall conform to BHMA ANSI/BHMA A156.3, Grade 1.

2.5.1 Exit Devices and Auxiliary Items

Trim shall be of wrought construction and commercial plain design with straight, beveled, or smoothly rounded sides, corners, and edges. Adjustable strikes shall be provided for rim type and vertical rod devices. Open back strikes shall be provided for pairs of doors with mortise and vertical rod devices; except open back strikes shall be used on labeled doors only where specifically provided for in the published listings. Touch bars shall be provided in lieu of conventional crossbars and arms. Escutcheons shall be provided not less than 7 by 2-1/4 inches. Escutcheons shall be cut to suit cylinders and operating trim.

2.5.2 Door Coordinator

Door coordinator with carry bar shall be Type 21 and shall be provided for each pair of doors equipped with an overlapping astragal. The coordinator shall be capable of holding the active door of a pair open until the inactive door has preceded it in the closing cycle. When used as fire exit hardware, the coordinator and carry bar shall be listed or labeled by a nationally recognized independent testing laboratory.

2.5.3 Electric Exit Devices

Electric exit devices shall conform to BHMA ANSI/BHMA A156.3 with factory installed electric lock modification having the capability to lock or unlock from remote location. Exit devices shall comply with life safety requirements of NFPA 101. In hazardous locations, products shall use safe power supplies or be pneumatic.

2.5.4 Automatic Flush Bolts

Automatic flush bolts shall be Type 25 in accordance with BHMA ANSI/BHMA A156.3, and shall be installed at the top and bottom of the inactive leaf of pairs of fire rated doors where specified in the hardware sets. Flush bolts shall be mortised in the strike edge of the door.

2.6 KEYING

All locks shall be furnished with a 7 pin removable interchangeable core as manufactured by Best Lock Co., keyed to the existing Best Lock System. Contractor is responsible for the cost of permanent keying

Locks shall be shipped to the job site with complete construction cores where necessary to provide construction site security, all other locks shall have non-keyed plastic cores.

Permanent keying will be determined in a meeting between and authorized representative of Best Locking systems of New York and the Owner. The DHPW locksmith shall be the person to be contacted by the Best Locking Systems of New York representative.

Best Locking Systems of New York shall ship all permanent cores, codes, and keys directly to the DHPW locksmith. At no time shall the Contractor or Contracting Officer have access to permanent cores or keys in order to maintain integrity of the locking system.

Best Lock Corporation will not provide permanent keying for locks they did not provide. Therefore, cylindrical locks must be Best manufacture, mortise locks may be of different manufacture, but, must be capable of using a mortise cylinder of Best manufacture. Cylindrical locks and mortise cylinders and rim cylinders must be provided by an authorized Best representative in order to receive permanent keying.

Deviations from this specification may only be approved by an authorized DHPW representative and coordinated with the DHPW locksmith.

Locks shall be keyed in sets or subsets as scheduled. Locks shall be furnished with the manufacturer's standard construction key system. Change keys for locks shall be stamped with change number and the inscription "U.S. Property - Do Not Duplicate." Keys shall be supplied as follows:

Locks: 3 change keys each lock.

Locks shall have not less than 7 pins. Cylinders shall have key removable type cores. An extension of the existing keying system shall be provided. All locks shall be furnished with a 7 pin removable core as manufactured by Best Lock Corporation. Disassembly of knob or lockset shall not be required to remove core from lockset. Provide key removable cores on all locksets and exit devices.

2.7 DOOR CLOSING DEVICES

Door closing devices shall conform to BHMA ANSI/BHMA A156.4, Series CO2000, Grade 1 with PT 4C. Provide complete with brackets, arms, mounting devices, fasteners, full size covers, pivots, cement cases, and other features necessary for the particular application. Closers shall be multi-size. Sizes 1 through 6, and list sizes in the Hardware Schedule. Provide manufacturer's 10 year warranty.

Overhead Closers shall be hydraulically controlled and full rack and pinion operation. The closer body shall be of high strength cast iron. Each closer shall have adjustable general speed and backcheck control. The spring power of the closers must be all size. Necessary arms, brackets, and other door accessories must be available to suit job conditions.

Closers for interior doors shall be CO2011 and C)2021, except as scheduled otherwise under Hardware Sets.

Electronic Closer/Magnetic Holders shall be ANSI C00191.

Unless specified otherwise, closers shall be mounted on that side of the opening least objectionable to public view. Provide parallel arm type at reverse bevel conditions.

The hardware schedule shall note the degrees of opening for all doors with closers.

2.7.1 Surface Type Closers

Surface type closers shall be Grade 1, Series as scheduled with options PT-4H, Size 1 or 2 through Size 6, and PT-4D with back check position valve. Except as otherwise specified, sizes shall conform to the manufacturer's published recommendations. Closers for outswinging exterior doors shall have parallel arms or shall be top jamb mounted. Closers for doors close to a wall shall be of narrow projection so as not to strike the wall at the 90-degree open position.

2.7.2 Floor Closers and Pivots

Floor closers shall be Grade 1 with internal dead stop for all exterior doors. Floor closers shall have cement boxes. Pivots used on doors with floor closers shall be of the same manufacturer as the floor closers. Floor plates are not required where thresholds cover the closer cement box. Floor closers shall have independent latch and sweep speed adjusting valves, backcheck, mechanical selective hold-open (except fire rated openings), and optional delayed action. Setting tools shall be furnished for use in installing floor closers. Electric pivots and floor closers shall comply with BHMA ANSI/BHMA A156.4 with modifications to ensure correct operation of electric hardware items.

2.8 DOOR CONTROLS - OVERHEAD HOLDERS

Door controls - overhead holders shall conform to BHMA ANSI/BHMA A156.8.

2.9 ELECTRO-MAGNETIC HOLDERS

Electro-magnetic door holders, door closers with integral hold-open device shall conform to BHMA ANSI/BHMA A156.15 and shall release the door upon activation of the building fire alarm system a ceiling mounted smoke detector or interruption of electric power. Door closers with integral hold-open device shall conform to BHMA ANSI/BHMA A156.15. The door shall be released upon activation of the detector or interruption of electric power.

2.10 ARCHITECTURAL DOOR TRIM

Architectural door trim shall conform to BHMA ANSI/BHMA A156.6.

2.10.1 Door Protection Plates

2.10.1.1 Armor Plates

Armor plates shall be Type 304 stainless steel, 36 inches in height, and 2 inches less in width than the width of the door for single doors and 1 inch

less for pairs of doors. Edges of metal plates shall be square.

2.10.1.2 Kick Plates

Kick plates shall be Type 304 stainless steel. Width of plates shall be 2 inches less than door width for single doors and 1 inchless for pairs of doors. Height shall be 10 inches, except where the bottom rail is less than 10 inches the plate shall extend to within 1/2 inch of the panel mold or glass bead. Edges of metal plates shall be square.

2.10.2 Door Edge Guards

Door edge guards shall be furnished to protect door edges with the required cut-outs for hardware items such as hinges, flush bolts, and locks. Door edge guards shall satisfy fire door ratings. Door edge guards shall be Type J205 0.50 inch thick stainless steel.

2.10.3 Push Plates

2.10.3.1 Combination Push-Pull Plates

Combination push-pull plates shall be Type J303, 0.050 inchthick minimum stainless steel beveled four edges.

2.10.4 Door Pulls and Push/Pull Units

2.10.4.1 Door Pulls

Door pulls shall be Category J400 stainless steel of plain modern design. Pulls for hollow metal, mineral core wood or kalamein doors shall be Type J405 thru-bolted to Type J301 flat push plates.

2.10.5 Push and Pull Bars

Push and pull bars shall be Category J401, stainless steel. Edges of mounting plates shall be square.

2.11 AUXILIARY HARDWARE

Auxiliary hardware, consisting of catches, door holders, door stops, and roller latches , shall conform to BHMA ANSI/BHMA A156.16. Lever extension flush bolts shall be Type L14081. Dust-proof strikes shall be Type L04011 for doors that are not fire rated. Dust-proof strikes shall be Type L04021 for fire rated doors. Other auxiliary hardware of the types listed below, shall conform to BHMA ANSI/BHMA A156.16.

2.12 MISCELLANEOUS

2.12.1 Automatic Door Bottoms

Automatic door bottoms shall be type as scheduled. Door bottom shall have a wool, felt, rubber, vinyl, or neoprene seal and shall be actuated by the opening and closing of the door. The door bottom shall exclude light when the door is in the closed position and shall inhibit the flow of air

through the unit.

2.12.2 Metal Thresholds

Thresholds shall conform to BHMA ANSI/BHMA A156.21. Thresholds for exterior doors shall be extruded aluminum of the type indicated and shall provide proper clearance and an effective seal with specified weather stripping.

2.12.3 Rain Drips

Extruded aluminum, not less than 0.07 inch thick, material as scheduled. Door sill rain drips shall be 1-1/2 inches to 1-3/4 inches high by 5/8 inch projection. Overhead rain drips shall be approximately 1-1/2 inches high by 2-1/2 inchesprojection and shall extend 2 inches on either side of the door opening width.

2.12.4 Aluminum Housed Type Weatherseals

Weatherseals of the type indicated shall consist of extruded aluminum retainers not less than 0.07 inch wall thickness with vinyl, neoprene, silicone rubber, polyurethane or vinyl brush inserts. Weatherseal material shall be of an industrial/commercial grade. Seals shall remain functional through all weather and temperature conditions. Air leakage rate of weatherstripping shall not exceed 0.5 cubic feet per minute per lineal foot of crack when tested in accordance with ASTM E 283 at standard test conditions.

2.12.5 Gasketing

Gasketing (weatherstripping/lightproofing) for exterior and interior doors shall be Pemko S88, National Guard Products 5050 or Reese 797, applied at head and jambs.

Automatic door bottoms shall be mortise type, Pemko 434AR, NGP 422, or Reese 430. If mortise type conflicts with material construction or other hardware, furnish surface type in the same grade.

Where a set of Astragals is noted in the Hardware Sets, furnish one set (two pieces) or Sealexe Therm-L-Brush A180 or Pemko 18062. Where an overlapping astragal is noted, furnish one-piece Pemko 375AR, National Guard Products 190NS, or Reese 93A.

Furnish gasketing and door bottoms as noted herein and/or as noted on the Door Schedule.

2.12.6 Door Stops

Wall stops, floor stops and combination stop and holders shall conform to BHMA ANSI/BHMA A156.16.

2.13 FASTENINGS

Fastenings of proper type, size, quantity, and finish shall be supplied

with each article of hardware. Machine screws and expansion shields shall be used for attaching hardware to concrete or masonry. Fastenings exposed to the weather in the finished work shall be of brass, bronze, or stainless steel. Sex bolts, through bolts, or machine screws and grommet nuts, where used on reverse-bevel exterior doors equipped with half-surface or full-surface hinges, shall employ one-way screws or other approved tamperproof screws. Screws for the jamb leaf of half-mortise and full-surface hinges attached to structural steel frames shall be one-way or other approved tamperproof type.

2.14 FINISHES

Unless otherwise specified, finishes shall conform to those identified in BHMA ANSI/BHMA A156.18. Where painting of primed surfaces is required, painting is specified in Section 09900 PAINTING, GENERAL.

Butts, Pivots, Spring Hinges, Locksets, Latchsets, Deadlocks, Cylinders, Exit Devices, Flush Bolts, Floor Stops, Overhead Stops, Flush Pulls, Catches, Etc. shall be Satin Chrome US26D (626).

Push Plates, Kick Plates, Armor Plates, Edge Guards, Door Pulls, and Wall Stops shall be stainless steel US32D (630). All plates shall be BS 0.050, 18-8 alloy.

Thresholds, saddles, door sweeps, automatic door bottoms (surface) and astragals shall be aluminum US 28 (628).

Surface Closers: At all painted doors, arms and covers shall be painted the same as door color. At all stained doors, finish of arms and covers shall be US26D plated.

Coordinators shall be USP (prime coat).

2.15 HARDWARE FOR FIRE DOORS

Hardware for fire doors shall conform to the requirements of NFPA 80and NFPA 101.

PART 3 EXECUTION

3.1 APPLICATION

Hardware shall be located in accordance with DHI-04 and DHI 05, except that deadlocks shall be mounted 48 inches above finish floor. When approved, slight variations in locations or dimensions will be permitted. Application shall be in accordance with DHI-A115.1G or DHI A115-W. Door control devices for exterior doors such as closers and holders, shall be attached to doors with thru bolts and nuts or sex bolts. Alternate fastening methods may be approved by the Contracting Officer when manufacturers' documentation is submitted to verify that the fastening devices and door reinforcements are adequate to resist wind induced stresses. Electric hardware items and access control devices shall be installed in accordance with manufacturer's printed installation procedures.

3.1.1 Hardware for Fire Doors and Smoke-Control Door Assemblies

Hardware for fire doors shall be installed in accordance with the requirements of NFPA 80. Exit devices installed on fire doors shall have a visible label bearing the marking "Fire Exit Hardware". Other hardware installed on fire doors, such as locksets, closers, and hinges shall have a visible label or stamp indicating that the hardware items have been approved by an approved testing agency for installation on fire-rated doors. Hardware for smoke-control door assemblies shall be installed in accordance with NFPA 105.

3.1.2 Door-Closing Devices

Door-closing devices shall be installed and adjusted in accordance with the templates and printed instructions supplied by the manufacturer of the devices. Insofar as practicable, doors opening to or from halls and corridors shall have the closer mounted on the room side of the door.

3.1.3 Key Control Storage Systems

Key control storage system shall be installed where directed.

3.1.4 Kick Plates and Mop Plates

Kick plates shall be installed on the push side of single-acting doors and on both sides of double-acting doors. Mop plates shall be installed on the pull side of the single acting doors.

3.1.5 Auxiliary Hardware

Lever extension flush bolts shall be installed at the top and bottom of the inactive leaf of pairs of doors. The bottom bolt shall operate into a dust-proof floor strike or threshold.

3.1.6 Thresholds

Thresholds shall be secured with a minimum of three fasteners per single door width and six fasteners per double door width with a maximum spacing of 12 inches. Exterior thresholds shall be installed in a bed of sealant with expansion anchors and stainless steel screws, except that bronze or anodized bronze thresholds shall be installed with expansion anchors with brass screws. Minimum screw size shall be No. 10 length, dependent on job conditions, with a minimum of 3/4 inchthread engagement into the floor or anchoring device used.

3.1.7 Rain Drips

Door sill rain drips shall align with the bottom edge of the door. Overhead rain drips shall align with bottom edge of door frame rabbet. Drips shall be set in sealant and fastened with stainless steel screws.

3.1.8 Weatherseals

Weatherseals shall be located as indicated, snug to door face and fastened

in place with color matched metal screws after door and frames have been finish painted. Screw spacing shall be as recommended by manufacturer.

3.1.9 Gasketing

Gasketing shall be installed at the inside edge of the hinge and head and latch sides of door frame. Frames shall be toleranced for a 1/8 inch clearance between door and frame. Frames shall be treated with tape primer prior to installation.

3.2 OPERATIONAL TESTS

Prior to acceptance of any electrical hardware system, an operational test shall be performed to determine if devices are operating as intended by the specifications. Wiring shall be tested for correct voltage, current carrying capacity, and proper grounding. Stray voltages in lock wiring shall be eliminated to prevent locking devices from releasing in critical situations.

3.3 FIELD QUALITY CONTROL

Architectural Hardware Consultant shall inspect the completed installation and certify that the hardware has been furnished and installed in accordance with the manufacturers' instructions and as specified. The inspection report shall identify any malfunctioning items and recommend adjustment or replacement as appropriate.

3.4 HARDWARE SETS

Notes:

1. "TO" indicates Tactile Outside trim.
2. Panic Device Modification:
3. Function "14-MOD" = Entrance by Lever Handle outside at all times.

3.4.1 **HW-1**

2	Thrust Pivots	A5511xNRP x 5" x 630
6	Butts	A5111 x NRP x 5" x 630
1	Panic Device	Type 8 x 12, Fig. 12 x 630
1	Panic Device	Type 8 x 01, Fig. 12 x 630
2	Pulls J401 -	1" x 10" o.c. x 630
2	Closers C02021 -	MOD to stop and hold open x 630
2	Kick Plates	J102 x 630
1	Threshold	J35123 x O.A. Height 1/2" x 5" Width
1	Set Gasketing	R0E154 - Charcoal @ Head and Jambs
1	Set Astragals	R3E735E (96")

Note: At pair Doors 2109A, furnish 8 butts-A5111 6" x 6" NRP x 630

3.4.2 **HW-1A**

8	Butts	A5111 x 6" x 6" x NRP x 630
2	Panic Devices	Type 8 x 01, Fig. 12 x 630
2	Closers C02021 -	MOD to stop and hold open x 630

2	Kick Plates	J102 x 630
1	Threshold	J35123 x O.A. Height 1/2" x 5" Width
1	Set Gasketing	R0E154 - Charcoal @ Head and Jambs
1	Set Astragals	R3E735 (96")

3.4.3 **HW-2**

1	Thrust Pivot	A5511 x NRP x 5" x 630
3	Butts	A5111 x NRP x 5" x 630
1	Panic Device	Type 8 x 01, Fig. 12 x 630
1	Pull	J401 - 1" x 10" o.c. x 630
1	Closer C02021 -	MOD to stop and hold open
1	Threshold	J35123 x O.A. Height 1/2" x 5" Width
1	Set Gasketing	R0E154 - Charcoal @ Head and Jambs

3.4.4 **HW-3**

4	Butts	A5111 x NRP x 630
1	Panic Device	Type 1 x 03 Fig. 2 x 630
1	Offset Pull	J402 - 1" x 10" o.c. x 630
1	Closer	C02021 - MOD to stop and hold open
1	Kick Plate	J102 x 630
1	Threshold	J35123 x O.A. Height 1/2" x 5" Width
1	Set Gasketing	R0E154 - Charcoal - @ head and Jambs

3.4.5 **HW-4**

8	Butts	A5111 x 630
2	Push Plates	J301 16x4 x 630
2	Pulls	J401 - 1" x 10"o.c. x 630
2	Closers	C02011 or C02021
2	Kick Plates	J102 x 630
2	Wall Stops/Floor Stops	L12101 x 630/L12131 x 626
2	Silencers	L03011

3.4.6 **HW-5**

8	Butts	A5111 x 630
2	Panic Devices	Type 8-F x 14-MOD, Fig. 12 x LBR x levers x 630
2	Closers	C02011 or C02021
2	Kick Plates	J102 x 630
2	Wall Stops/Floor Stops	L12101 x 630/L12131 x 626
2	Silencers	L03011
1	Set Gasketing	R0E154 - Charcoal - @ Head & Jambs
1	Set Smoke Astragals	R3E734 x full height of door

3.4.7 **HW-5A**

4	Butts	A5111 x 630
1	Panic Device	Type 8-F x 14-MOD, Fig. 6 x levers x 630
1	Closer	C02011 or C02021
1	Kick Plate	J102 x 630
1	Wall Stops/Floor Stops	L12101 x 630/L12131 x 626
1	Set Gasketing	R0E154 - Charcoal - @ Head & Jambs

3.4.8 **HW-6**

4	Butts	A5111 x 630
1	Panic Device	Type 3-F x 14-MOD, Fig. 6 x levers x 630
1	Closer	C02011 or C02021
1	Kick Plate	J102 x 630
1	Wall Stop/Floor Stop	L12101 x 630/L12131 x 626
1	Set Gasketing	R0E154 - Charcoal - @ Head & Jambs

3.4.9 **HW-7**

8	Butts	A5111 x NRP x 630
1	Panic Device	Type 8 x 12, Fig. 12 x 630
1	Panic Device	Type 8 x 01, Fig. 12 x 630
2	Pulls	J401 - 1" x 10" o.c. x 630
2	Closers	C02021 Mod. To Stop & Hold Open
2	Kick Plates	J102 x 630
1	Threshold	J35123 x O.A. Height 1/2" x 5" Width
1	Set Gasketing	R0E154 - Charcoal - @ Head & Jambs
1	Set Astragals	R3E735 x full height of door

3.4.10 **HW-8**

8	Butts	A5111 x NRP x 630
1	Panic Device	Type 8 x 12, Fig. 12 x 630
1	Panic Device	Type 8 x 01, Fig. 12 x 630
2	Pulls	J401 - 1" x 10"o.c. x 630
2	Closers	C02021 - MOD to stop and hold ope
2	Kick Plates	J102 x 630
1	Threshold	J35123 x O.A. Height 1/2" x 5" Width
1	Set Gasketing	R0E154 - Charcoal - @ Head & Jambs
1	Set Astragals	R3E735 x full height of door

3.4.9 **HW-9 THROUGH HW-15**

NOT USED

3.4.12 **HW-16**

8	Pocket Pivots	Dorma 75523, Dor-o-matic 91105F, or Rixson 519 x 626
2	Panic Devices	Type 8-F x 14-MOD, Fig. 12 x LBR x levers x 630
2	Pocket Closers	C02021 MOD for wall pocket mounting
2	Electromagnetic Holders	C00011 x 626
1	Set Gasketing	R0E154 - Charcoal - @ Head and Jambs
1	Set Smoke Gasket Astragals	R3E734 x full height of door

3.4.13 **HW-16A**

8	Pocket Pivots	Dorma 75523, Dor-o-matic 91105F, or Rixson 519 x 626
2	Panic Devices	Type 8-F x 14-MOD, Fig. 12 x LBR x levers x 630

2 Overhead Stops C12541 x 626
1 Set Gasketing R0E154 - Charcoal - @ Head and Jambs
1 Set Smoke Gasket Astragals R3E734 x full height of door

3.4.14 **HW-16B**

1 Butt A5112 x 630
2 Spring Hinges K81071 4.5" x 4.5" x 630
1 Lockset F86, Grade 1 x Levers x 630
1 Overhead Stop C12541 x 626
1 Set Gasketing R0E154 - Charcoal - @ Head and Jambs

3.4.15 **HW-17**

8 Butts A5112 x 630
2 Panic Devices Type 8-F x 14-MOD, Fig. 12 x LBR x levers x 630
2 Closer/Holder Releases C00191 x Invert Mount, 170 deg. H.O.
2 Wall Stops/Floor Stops L12101 x 630/L12131 x 626
1 Set Gasketing R0E154 - Charcoal - @ Head and Jambs
1 Set Smoke Gasket Astragals R3E734 x full height of door

3.4.16 **HW-18**

8 Butts A5112 x 630
2 Panic Devices Type 8-F x 14-MOD, Fig. 12 x 630 x levers x LBR
2 Closers C02011 or C02021
2 Kick Plates J102 x 630
2 Wall Stops/Floor Stops L12101 x 630/L12131 x 626
1 Set Gasketing R0E154 - Charcoal - @ Head and Jambs
1 Set Smoke Gasket Astragals R3E734 x full height of door

3.4.17 **HW-18A**

8 Butts A5112 x 630
2 Panic Devices Type 8-F x 01, Fig. 12 x 630 x LBR
2 Closers C02011 or C02021
2 Kick Plates J102 x 630
2 Wall Stops/Floor Stops L12101 x 630/L12131 x 626
1 Set Gasketing R0E154 - Charcoal - @ Head and Jambs
1 Set Smoke Gasket Astragals R3E734 x full height of door

3.4.18 **HW-19**

8 Butts A5112 x 630
2 Panic Devices Type 8-F x 01, Fig. 12 x 630 x LBR
2 Closers C02011 or C02021
2 Electromagnetic Holders C0001 x 626
1 Set Gasketing R0E154 - Charcoal - @ Head & Jambs
1 Set Smoke Gasket Astragals R3E734 x full height of door

3.4.19 **HW-20**

8 Butts A5112 x 630

2	Panic Devices	Type 8-F x 14-MOD, Fig. 12 x levers x 630 x LBR
2	Closer/Holder Releases	C00191 (Mount Pull Side)
2	Overhead Stops	C12541 x 626 (Mount Push Side)
1	Set Gasketing	R0E154 - Charcoal - @ Head and Jambs
1	Set Smoke Gasket Astragals	R3E734 x full height of door

3.4.20 **HW-21**

2	Sets Pocket Pivots	Dorma 75523 Dor-o-Matic 91105F or Rixson 519 x 626
2	Panic Devices	Type 8-F x 14-MOD, Fig. 12 x 630 x levers x LBR
2	Pocket Closers	C02021 MOD for wall pocket mtg.
2	Electromagnetic Holders	C00011 X 626
2	Sets Gasketing	R0E154 - Charcoal - @ Head & Jambs
1	Overlapping Smoke Astragal	R53635E (96")

3.4.21 **HW-22**

8	Butts	A5112 x 630
2	Panic Devices	Type 8-F x 14-MOD, Fig. 12 x 630 x levers x LBR
2	Closer/Holder Releases	C00191
2	Overhead Stops	C12541 X 626
1	Set Gasketing	R0E154 - Charcoal - @ Head and Jambs
1	Set Smoke Astragals	R3E734 x full height of door

3.4.22 **HW-23**

1	Set Pocket Pivots	Dorma 75523, Dor-o-matic 91105F, or Rixson 519 x 626
1	Panic Device	Type 3-F x 14-MOD, Fig. 6 x levers x 630
1	Pocket Closer	C02021 MOD for wall pocket mounting
1	Electromagnetic Holder	C00011 x 626
1	Set Gasketing	R0E154 - Charcoal - Head and Jambs

3.4.23 **HW-24**

8	Butts	A5111 x 630
2	Panic Devices	Type 8-F x 08, Fig. 12 x levers x 630 x LBR
2	Closers	C02011 or C02021
2	Kick Plates	J102 x 630
2	Wall Stops/Floor Stops	L12101 x 630/L12131 x 626
1	Set Gasketing	R0E154 - Charcoal - @ Head and Jambs
1	Set Smoke Gasket Astragals	R3E734 x full height of door

3.4.24 **HW-24A**

8	Butts	A5111 x 630
2	Panic Devices	Type 2-F x 08, Fig. 9 x lever x 630 x LBR
2	Closers	C02011 or C02021-Cush 90
2	Kick Plates	J102 x 630
1	Set Gasketing	R0E154 - Charcoal - @ Head and Jambs
1	Set Smoke Gasket Astragals	R3E734 x full height of door

3.4.25 **HW-25**

8	Butts	A5112 x 630
1	Panic Device	Type 3-F x 13, Fig. 6 x levers x TO x 630
1	Panic Device	Type 8-F x 01, Fig. 12 x 630
1	Coordinator	Type 21
2	Closers	C02011 or C02021
2	Kick Plates	J102 x 630
2	Wall Stops/Floor Stops	L12101 x 630/L12131 x 626
1	Set Gasketing	R0E154 - Charcoal - @ Head and Jambs
1	Set Smoke Astragals	R3E734 x full height of door x 630

3.4.26 **HW-26**

4	Butts	A5112 x 630
1	Panic Device	Type 3-F x 13, Fig. 6 x levers x TO x 630
1	Closer	C02011 or C02021
1	Kick Plate	J102 x 630
1	Wall Stop/Floor Stop	L12101 x 630/L12131 x 626
1	Set Gasketing	R0E154 - Charcoal - @ Head and Jambs

3.4.27 **HW-26A**

4	Butts	A5112 x 630
1	Panic Device	Type 3-F x 14-MOD x Fig. 6 x lever x TO x 630
1	Closer	C02011 or C02021
1	Kick Plate	J102 x 630
1	Wall Stop/Floor Stop	L12101 x 630/L12131 x 626
1	Set Gasketing	R0E154 - Charcoal - @ Head and Jambs

3.4.28 **HW-27**

8	Butts	A5112 x 630
2	Push Plates	J301 - 16x4 x 630
2	Pulls	J401 - 1" x 10"o.c. x 630
2	Closers	C02011 or C02021
2	Kick Plates	J102 x 630
2	Wall Stops/Floor Stops	L12101 x 630/L12131 x 626
2	Silencers	L03011

3.4.29 **HW-28**

4	Butts	A5112 x 630
1	Panic Device	Type 3-F x 14-MOD, Fig. 6 x levers x630
1	Closer	C02011 or C02021
1	Kick Plate	J102 x 630
1	Wall Stop/Floor Stop	L12101 x 630/L12131 x 626
1	Set Gasketing	R0E154 - Charcoal - @ Head and Jambs
1	Auto. Door Bottom	R3E324B (2-5/16")

3.4.30 **HW-28A**

1	Conductor Hinge	A5111 MOD for 8 conc. Conductors x 630

3	Butts	A5112 x 630
1	Elect Panic Device	Type 3-F x 03 x lever x Gig 6 x Fail Safe x 630
1	Closer	C02011 or C02021
1	Kick Plate	J102 x 630
1	Wall Stop/Floor Stop	L12101 x 630/L12131 x 626
1	Set Gasketing	R0E154 - Charcoal - @ Head and Jambs
1	Auto. Door Bottom	R3E324B (2-5/16")

3.4.31 **HW-29**

4	Butts	A5112 x 630
1	Lockset	F07 x Lever x 630
1	Closer	C02011 or C02021
1	Kick Plate	J102 x 630
1	Wall Stop/Floor Stop	L12101 x 630/L12131 x 626
1	Set Gasketing	R0E154 - Charcoal - @ Head and Jambs
1	Auto. Door Bottom	R3E324B (2-5/16")

3.4.32 **HW-30**

8	Butts	A5112 x 630
2	Push Plates	J301 - 16x4 x 630
2	Pulls	J401 - 1" x 10"o.c. x 6 0
2	Closers	C02011 or C02021
2	Kick Plates	J102 x 630
2	Wall Stops/Floor Stops	L12101 x 630/L12131 x 626
	or	
2	O.H. Stays	C12541 x 626 @ Back-to-Back Conditions
2	Silencers	L03011

3.4.33 **HW-31**

8	Butts	A5112 x 630
2	Push Plates	J301 16" x 4" x 630
2	Flush Pulls	J403 (3-3/8 x 4-3/4") x 626
2	Closers	C02021 x H.O.
2	Kick Plates	J102 x 630
2	Wall Stops/Floor Stops	L12101 x 630/L12131 x 626
2	Silencers	L03011

3.4.34 **HW-32**

1	Conductor Hinge	A5111 MOD for 8 conc. Conductors x 630
3	Butts	A5111 x NRP x 630
1	Electric Lockset	F07 x Lever x 630 MOD for "Fail-Safe
1	Closer	C02021 - MOD to stop and hold open
1	Threshold	J36120 x O.A. Hgt. 1" x 3-11/16"Wide
1	Set Gasketing	R0E154 - Charcoal - @ Head and Jambs

3.4.35 **HW-33**

4	Butts	A5112 x 630

1	Panic Device	Type 3-F x 14-MOD, Fig. 6 x lever x 630
1	Closer	C02011 or C02021
1	Kick Plate	J102 x 630
1	Wall Stop/Floor Stop	L12101 x 630/L12131 x 626
1	Set Gasketing	R0E154 - Charcoal - @ Head and Jambs
1	Auto. Door Bottom	R3E324B (2-5/16")

3.4.36 **HW-34**

4	Butts	A5112 x 630
1	Lockset	F07 x Lever x 630 x T.O.
1	Closer	C02011 or C02021
1	Kick Plate	J102 x 630
1	Wall Stop/Floor Stop	L12101 x 630/L12131 x 626
1	Set Gasketing	R0E154 - Charcoal - @ Head & Jambs

3.4.37 **HW-34A**

8	Butts	A5112 x 630
1	Lockset	F07 x Lever x 630 x T.O.
2	Manual Flush Bolts	L14081 x 626
1	Closer	C02011 or C02021 (Active Leaf)
1	Kick Plate	J102 x 630
2	Wall Stops/Floor Stops	L12101 x 630/L12131 x 626
1	Set Gasketing	R0E154 - Charcoal - @ Head and Jambs
2	Auto. Door Bottoms	R3E324B (2-5/16")
1	Overlapping Smoke Astragal	R53635E (96")

3.4.38 **HW-35**

8	Butts	A5112 x 630
1	Lockset	F07 x Lever x 630 x T.O.
2	Manual Flush Bolts	L14081 x 626
1	Closer	C02011 or C02021 (Active Leaf)
2	Kick Plates	J102 x 630
2	Wall Stops/Floor Stops	L12101 x 630/L12131 x 626
1	Set Gasketing	R0E154 - Charcoal - @ Head and Jambs
2	Auto. Door Bottoms	R3E324B (2-5/16")
1	Overlapping Smoke Astragal	R53635E (96")

3.4.39 **HW-36**

4	Butts	A5112 x 630
1	Latchset	F01 x Lever x 630
1	Closer	C02011 or C02021
1	Kick Plate	J102 x 630
1	Wall Stop/Floor Stop	L12101 x 630/L12131 x 626
1	Set Gasketing	R0E154 - Charcoal - @ Head and Jambs

3.4.40 **HW-37**

4	Butts	A5112 x 630
1	Lockset	F07 x Lever x Less Outside Trim x 630
1	Cylinder Pull	J303 2" x 3/4" x 630 x T.O.

1	Closer	C02011 or C02021
1	Kick Plate	J102 x 630
1	Wall Stop/Floor Stop	L12101 x 630/L12131 x 626
1	Set Gasketing	R0E154 - Charcoal - @ Head & Jambs

3.4.41 **HW-38**

4	Butts	A5112 x 630
1	Lockset	F07 x Lever x 630 x T.O.
1	Closer	C02011 or C02021
1	Kick Plate	J102 x 630
1	Wall Stop/Floor Stop	L12101 x 630/L12131 x 626
1	Set Gasketing	R0E154 - Charcoal - @ Head & Jambs

3.4.42 **HW-39**

4	Butts	A5112 x 630
1	Lockset	F07 x Lever x 630 .
1	Closer	C02011 or C02021
1	Kick Plate	J102 x 630
1	Wall Stop/Floor Stop	L12101 x 630/L12131 x 626
1	Set Gasketing	R0E154 - Charcoal - @ Head & Jambs

3.4.43 **HW-40**

4	Butts	A5112 x 630
1	Deadlock	E6090 x 626
1	Push Plate	J301 - 16x4 x 630
1	Pull	J401 - 1" x 10"o.c. x 630
1	Closer	C02011 or C02021
1	Kick Plate	J102 x 630 x 14 in. high
1	Wall Stop/Floor Stop	L12101 x 630/L12131 x 626
1	Set Gasketing	R0E154 - Charcoal - @ Head & Jambs

3.4.44 **HW-41**

8	Butts	A5112 x 630
1	Lockset	F07 x Lever x Less Outside Trim x 630
1	Cylinder Pull	J303 - 2" x 3/4"x 630 x T.O.
2	Manual Flush Bolts	L14081 x 626
1	Closer	C02011 or C02021 (Active Leaf)
2	Wall Stops/Floor Stops	L12101 x 630/L12131 x 626
1	Set Gasketing	R0E154 - Charcoal - @ Head & Jambs
1	Overlapping Smoke Astragal	R53635E (96")

3.4.45 **HW-42**

4	Butts	A5112 x 4-1/2"x 4" x 630
1	Lockset	F07 x Lever x Less Outside Trim x 630
1	Cylinder Pull	J303 - 2" x 3/4" x 630
1	Closer	C02011 or C02021
1	Wall Stop/Floor Stop	L12101 x 630/L12131 x 626
3	Silencers	L03011

3.4.46 **HW-43**

4	Butts	A5112 x 630
1	Lockset	F04 x Lever x 630
1	Closer	C02011 or C02021
1	Kick Plate	J102 x 630
2	Wall Stops/Floor Stops	L12101 x 630/L12131 x 626
1	Set Gasketing	R0E154 - Charcoal - @ Head & Jambs

3.4.47 **HW-44**

4	Butts	A5111 x NRP x 630
1	Lockset	F14 x Lever x 630
1	Closer	C02021 - MOD to stop and hold open
1	Threshold	J36120 x O.A. Hgt. 1" x 3-11/16"Wide
1	Set Gasketing	R0E154 - Charcoal - @ Head & Jam s

3.4.48 **HW-45**

4	Butts	A5112 x 630
1	Panic Device	Type 3-F x 13, Fig. 6 x lever 630
1	Closer	C02011 or C02021
1	Kick Plate	J102 x 630
2	Wall Stops/Floor Stops	L12101 x 630/L12131 x 626
1	Set Gasketing	R0E154 - Charcoal - @ Head & Jambs
1	Auto. Door Bottom	R3E324B (2-5/16")

3.4.49 **HW-45A**

4	Butts	A5112 x 630
1	Panic Device	Type 3-F x 08, Fig. 6 x lever x non-ferrous x 630
1	Closer	C02011 or C02021
1	Kick Plate	J102 x 630
2	Wall Stops/Floor Stops	L12101 x 630/L12131 x 626
1	Set Gasketing	R0E154 - Charcoal - @ Head & Jambs

3.4.50 **HW-46**

4	Butts	A5112 x 630
1	Panic Device	Type 3-F x 08, Fig. 6 x lever x 630
1	Closer	C02011 or C02021
1	Kick Plate	J102 x 630
1	Wall Stop/Floor Stop	L12101 x 630/L12131 x 626
1	Set Gasketing	R0E154 - Charcoal - @ Head & Jambs

3.4.51 **HW-47**

4	Butts	A5112 x 630
1	Latchset	F01 x Lever x 630
1	Deadlock	E6090 x 626
1	Closer	C02011 or C02021
1	Kick Plate	J102 x 630
1	Wall Stop/Floor Stop	L12101 x 630/L12131 x 626

1	Set	Gasketing R0E154 - Charcoal - @ Head & Jambs

3.4.52 **HW-48**

4	Butts	A5112 x 630
1	Latchset	F01 x Lever x 630
1	Closer	C02011 or C02021
1	Wall Stop/Floor Stop	L12101 x 630/L12131 x 626
3	Silencers	L03011

3.4.53 **HW-49**

4	Butts	A5111 x NRP x 630
1	Lockset	F14 x Lever x 630
1	Closer	C02011 or C02021
1	Threshold	J35123 x O.A. Height 1/2" x 5" Width
1	Set Gasketing	R0E154 - Charcoal - @ Head and Jambs

3.4.54 **HW-50**

4	Butts	A5112 x 630
1	Privacy Latch	F02 x Lever x 630
1	Closer	C02011 or C02021
1	Kick Plate	J102 x 630
1	Wall Stop/Floor Stop	L12101 x 630/L12131 x 626
3	Silencers	L0301

3.4.55 **HW-51**

8	Butts	A5112 x 630
1	Lockset	F07 x Lever x 630 x T.O.
2	Manual Flush Bolts	L14081 x 626
1	Closer	C02011 or C02021 (Active Leaf)
2	Wall Stops/Floor Stops	L12101 x 630/L12131 x 626
1	Set Gasketing	R0E154 - Charcoal - @ Head & Jambs
1	Smoke Astragal	R3734 x full height of door

3.4.56 **HW-52**

4	Butts	A5112 x 630
1	Lockset	F04 x Lever x 630
1	Wall Stop/Floor Stop	L12101 x 630/L12131 x 626
3	Silencers	L03011

3.4.57 **HW-53**

8	Butts	A5112 x 630
2	Panic Devices	Type 8-F x 01, Fig. 12 x 630
2	Closers	C02011 or C02021
2	Kick Plates	J102 x 630
2	Wall Stop/Floor Stops	L12101 x 630/L12131 x 626
1	Set Gasketing	R0E154 - Charcoal - @ Head & Jambs
1	Smoke Astragal	R3E734 x full height of door

3.4.58 **HW-54**

4	Butts	A5112 x 630
1	Lockset	F04 x Lever x 630
1	Closer/Holder Release	C00191
1	Kick Plate	J102 x 630
1	Wall Stop/Floor Stop	L12101 x 630/L12131 x 626
3	Silencers	L03011

3.4.59 **HW-54A**

4	Butts	A5112 x 630
1	Lockset	F04 x Lever x 630
1	Closer	C02011 or C02021 - 180 degrees
1	Electromag Holder	C00011, recessed wall mount x concealed wiring x 626
1	Latch	F01121 x 630
1	Kick Plate	J102 x 630
1	Wall Stop/Floor Stop	L12101 x 630/L12131 x 626
4	Silencers	L03011

3.4.60 **HW-55**

4	Butts	A5112 x 630
1	Lockset	F04 x Lever x 630
1	Closer	C02011 or C02021
1	Kick Plate	J102 x 630
1	Wall Stop/Floor Stop	L12101 x 630/L12131 x 626
3	Silencers	L03011

3.4.61 **HW-56**

4	Butts	A5112 x 630
1	Lockset	F04 x Lever x 630
1	Closer	C02011 or C02021
1	Kick Plate	J102 x 630
1	Wall Stop/Floor Stop	L12101 x 630/L12131 x 626
1	Set Gasketing	R0E154 - Charcoal - @ Head & Jambs

3.4.62 **HW-57**

8	Butts	A5112 x 630
1	Deadlock	E6070 x 626
2	Flush Pulls	J403 - 3-3/8" x 4-3/4" x 626
2	Manual Flush Bolts	L14081 x 626
2	Catches	13292 x 626 (Mt. @ Head Jambs)
2	Silencers	L03011

3.4.63 **HW-58**

2	Floor Closers	C06021 x top pivots
2	Push/Pull Bar Assemblies	J401 - 10" o.c. x 1" dia., B-to-B with J501 c-to-c stiles x 630

3.4.64 **HW-59**

4	Butts	A5112 x 630
1	Push Plate	J301- 16x4 x 630
1	Push/Pull Plate	J303 - 3-1/2" X 15-3/4" X 630
1	Closer	C02021 x H.O.
1	Kick Plate	J102 x 630
1	Wall Stop/Floor Stop	L12101 x 630/L12131 x 626
3	Silencers	L03011

3.4.65 **HW-60**

8	Butts	A5112 x 630
1	Lockset	F07 x Lever x 630 .
2	Manual Flush Bolts	L14081 X 626
1	Closer (Active Leaf)	C02011 or C02021 x Bracket
2	Kick Plates	J102 x 630
2	Heavy Duty OH Stops	C25541
1	Set Gasketing	R0E154 - Charcoal - @ Head & Jambs
1	Overlapping Smoke Astragal	R53635E (96")

3.4.66 **HW-61**

8	Butts	A5112 - 4-1/2" x 4" x 630
1	Deadlock	E6090
2	Manual Flush Bolts	L14081 x 626 - 1/12" - 1/18" (Top)
1	Set Pulls (Active Leaf)	J203 x 630 - Back-to-back mt. (Cut for lock functions)
1	Set Pulls (Inactive Leaf)	J203 x 630 - Back-to-back
2	Catches	BHMA 13292 x 626 - Mt. @ Top Rails
2	Wall Stops/Floor Stops	L12101 x 630/L12131 x 626
2	Silencers	L03011

3.4.67 **HW-62**

8	Butts	A5111 x 630
1	Lockset	F09 x Lever x 630
1	Set Auto. Flush Bolts	Type 25 X 630
1	Coordinator	Type 21 x USP
2	Closers	C02011 or C02021 x Brackets
2	Kick Plates	J102 x 630
2	O.H. Stops	C12541 x 626
1	Set Gasketing	R0E154 - Charcoal - @ Head & Jambs
1	Overlapping Smoke Astragal	R53635E (96")

3.4.68 **HW-62A**

8	Butts	A5111 x 630
1	Lockset	F09 x Lever x 630
2	Latchsets	F76 Grade 1 x lever x 630 (Mount on upper leaves to latch into lower leaves)
1	Set Auto. Flush Bolts	Type 25 X 630
1	Coordinator	Type 21 x USP
2	Closer/Holder Releases	C00191

2	O.H. Stops	C12541 x 626
1	Set Gasketing	R0E154 - Charcoal - @ Head & Jambs
1	Overlapping Smoke Astragal	R53635E (96")

3.4.69 **HW-62B**

1	Butt	A5111 x NRP x 630
1	Spring Hinge	K81071 4.5" x 4.5" x 630
1	Latchset	F76 Grade 1 x Lever x 630 (Mount bottom rail)
1	Set Gasketing	R0E154 - Charcoal - @ Head & Jambs

3.4.70 **HW-63**

4	Butts	A5112 x 630
1	Lockset	F04 x Lever x 630
1	Closer	C02011 or C02021
1	Kick Plate	J102 x 630
1	Wall Stop/Floor Stop	L12101 x 630/L12131 x 626
3	Silencers	L03011

3.4.71 **HW-64**

8	Butts	A5111 x 630
2	Panic Devices	Type 8-F x 08, Fig. 12 x 630 x levers x LBR
2	Closers	C02021-MOD for stop
2	Kick Plates	J102 x 630
1	Set Gasketing	R0E154 - Charcoal - @ Head & Jambs
1	Set Smoke Astragals	R3E734 x full height of door

3.4.72 **HW-65**

4	Butts	A5111 x 630
1	Panic Device	Type 3-F x 13, Fig. 6 x levers x 630
1	Closer	C02011 or C02021
1	Kick Plate	J102 x 630
1	Wall Stop/Floor Stop	L12101 x 630/L12131 x 626
1	Set Gasketing	R0E154 - Charcoal - @ Head & Jambs

3.4.73 **HW-66**

8	Butts	A5112 - 4-1/2 X 4" x 630
1	Deadlock	E6070 (N.F.)
2	Manual Flush Bolts	L14081 x 626
2	Flush Pulls	J403 - 3-3/8" x 4-3/4" x 626
2	Wall Stops/Floor Stops	L12101 x 630/L12131 x 626
2	Catches	BHMA 13292 x 626 (Mount @ Top Rails)
2	Silencers	L03011

3.4.74 **HW-67**

4	Butts	A5112 x 630
1	Lockset	F04 Non Ferrous x Lever x 630
1	Closer	C02011 or C02021
1	Kick Plate	J102 x 630

1	Wall Stop/Floor Stop	L12101 x 630/L12131 x 626
3	Silencers	L03011

3.4.75 **HW-68**

4	Butts	A5112 x 630
1	Lockset	F07 Non Ferrous x Lever x 630 .
1	Closer	C02011 or C02021
1	Kick Plate	J102 x 630
1	Wall Stop/Floor Stop	L12101 x 630/L12131 x 626
3	Silencers	L03011

3.4.76 **HW-69**

4	Butts	A5112 x 630
1	Privacy Set	F02 Non Ferrous x Lever x 630
1	Closer	C02011 or C02021
1	Kick Plate	J102 x 630
1	Wall Stop/Floor Stop	L12101 x 630/L12131 x 626
3	Silencers	L03011

3.4.77 **HW-70**

4	Butts	A5112 - 4-1/2" x 4" x 630
1	Deadlock	E6090 x 630
1	Flush Pull	J403- 3-3/8" x 4-3/4" x 626
1	Catch	BHMA 13292 x 626 (Mount @ Top Rail)
1	Wall Stop/Floor Stop	L12101 x 630/L12131 x 626
3	Silencers	L03011

3.4.78 **HW-71**

	Butts	A5111 x 630
1	Lockset	F09 x Lever x 630
1	Set Auto. Flush Bolts	Type 25 x 630
1	Coordinator	Type 21 x USP
2	Closers	C02011 or C02021
2	Armor Plates	J102 -14-in. high x 630
2	Edge Guards	J203 - 14-in. high x 630(@ hinge edges)
2	Wall Stops/Floor Stops	L12101 x 630/L12131 x 626
1	Set Gasketing	R0E154 - Charcoal - @ Head & Jambs
1	Overlapping Smoke Astragal	R53635E (96")

3.4.79 **HW-71A**

	Butts	A5111 x 630
1	Lockset	F09 x Lever x 630
1	Set Auto. Flush Bolts	Type 25 x 630
1	Coordinator	Type 21 x USP
2	Closer/Holder Releases	C00191 x Invert Mount
2	Armor Plates	J102 -14-in. high x 630
2	Edge Guards	J203 - 14-in. high x 630(@ hinge edges)
2	Overhead Stops	C12541 x 626 (mount push side)

1	Set Gasketing	R0E154 - Charcoal - @ Head & Jambs
1	Overlapping Smoke Astragal	R53635E (96")

3.4.80 **HW-72**

1	Cylinder as required	GMK to system.

3.4.81 **HW-73**

8	Butts	A5112 x 630
1	Lockset	F07 x Lever x 630 .
2	Manual Flush Bolts	L14081 x 626
1	Closer	C02011 or C02021 (Active Leaf)
1	Kick Plate (Active Leaf)	J102 x 630
2	Wall Stops/Floor Stops	L12101 x 630/L12131 x 626
1	Set Gasketing	R0E154 - Charcoal - @ Head & Jambs
1	Overlapping Smoke Astragal	R53635E (96")

3.4.82 **HW-74**

8	Butts	A5111 x 630
1	Lockset	F07 Non Ferrous x Lever x Less Outside Trim x 630
1	Flush Pull	J403 - 3-3/8" x 4-3/4" x 626
2	Manual Flush Bolts	L14081 x 626
1	Closer	C02011 or C02021Active Leaf
2	Wall Stops/Floor Stops	L12101 x 630/L12131 x 626
2	Silencers	L03011

3.4.83 **HW-75**

8	Butts	A5112 x 630
1	Lockset	F09 Non Ferrous x Lever x 630
1	Set Auto. Flush Bolts	Type 25 x 630
1	Coordinator	Type 21 x USP
2	Closers	C02011 or C02021
2	Kick Plates	J102 x 630
2	O.H. Stops	C12541 x 626
1	Set Gasketing	R0E154 - Charcoal - @ Head & Jambs
1	Overlapping Smoke Astragal	R53635E (96")

3.4.84 **HW-76**

4	Butts	A5112 x 630
1	Lockset	F09 Non Ferrous x Lever x 630
1	Closer	C02011 or C02021
1	Kick Plate	J102 x 630
1	Wall Stop/Floor Stop	L12101 x 630/L12131 x 626
1	Set Gasketing	R0E154 - Charcoal - @ Head & Jambs

3.4.85 **HW-77**

4	Butts	A5112 x 630

1	Deadlock	E6070 Non Ferrous x 630
1	Push Plate	J301 - 16" x 4" x 630
1	Pull	J401 - 1" x 10"o.c. x 630
1	Closer	C02011 or C02021
1	Kick Plate	J102 x 630
1	Wall Stop/Floor Stop	L12101 x 630/L12131 x 626
3	Silencers	L03011

3.4.86 **HW-78**

4	Butts	A5112 x 630
1	Push Plate	J301 - 16" x 4" x 630
1	Pull	J401 - 1" x 10"o.c. x 630
1	Closer	C02011 or C02021
1	Kick Plate	J102 x 630
1	Wall Stop/Floor Stop	L12101 x 630/L12131 x 626
3	Silencers	L03011

3.4.87 **HW-79**

8	Butts	A5112 x 630
1	Latchset	F01 x Lever x 630
2	Manual Flush Bolts	L14081 x 626
1	Closer	C02011 or C02021 (Active Leaf)
2	Wall Stops/Floor Stops	L12101 x 630/L12131 x 626
1	Set Gasketing	R0E154 - Charcoal - @ Head and Jambs
1	Overlapping Smoke Astragal	R53635E (96")

3.4.88 **HW-80**

1	Butt	A5112 x 630
1	Spring Hinge	K81071 - 4.5 x 4.5 x 630
1	Electromagnetic Holder	C00011 x 626

3.4.89 **HW-81**

8	Butts	A5112 x 630
2	Panic Devices	Type 8F x 01, Fig 12 x levers x 630
2	Closers	C02011 or C02021
2	Kick Plates	J102 x 630
2	Wall Stops/Floor Stops	L12101 x 630/L12131 x 626
3	Silencers	L03011
1	Overlapping Smoke Astragal	R53635E (96")

3.4.90 **HW-82**

1	Butt	A5111 x 630
1	Spring Hinge	K81071 - 4.5" x 4.5" x 630
1	Secret Gate Latch	Knape-Vogt 989 x 626

3.4.91 **HW-83**

8	Butts	A5112 x 630

2 Push Plates	J301-16x4 x 630
2 Closers	C02021 x H.O.
2 Kickplates	J102 x 630
2 Wall Stops/Floor Stops	L12101 x 630/L12131 x 626
2 Silencers	L03011

3.4.92 **MISCELLANEOUS**

Furnish the following for User's Stock

20 Heavy Weight Butts	A5111 - 4.5" x 4.5" x 630
10 Standard Weight Butts	A5112 - 4.5" x 4.5" x 630
5 Latchsets	F01 x lever x 630
5 Privacy Sets	F02 x lever x 630
5 Locksets	F04 x lever x 630
5 Locksets	F07 x lever x 630
5 Locksets	F09 x lever x 630
2 Exit Devices	Type 8-F x 08, Fig 12 x levers x 630
2 Exit Devices	Type 3-F x 14 MOD, Fig 6 x levers x 630
5 Closers	C02011

-- End of Section --

SECTION 08810

GLASS AND GLAZING

PART 1 GENERAL

1.1 REFERENCES

The publications listed below form a part of this specification to the extent referenced. The publications are referred to in the text by basic designation only.

AMERICAN NATIONAL STANDARDS INSTITUTE (ANSI)

ANSI Z97.1	(1984; R 1994) Safety Performance Specifications and Methods of Test for Safety Glazing Materials Used in Buildings

AMERICAN SOCIETY FOR TESTING AND MATERIALS (ASTM)

ASTM C 509	(1994) Elastomeric Cellular Preformed Gasket and Sealing Material
ASTM C 864	(1993) Dense Elastomeric Compression Seal Gaskets, Setting Blocks, and Spacers
ASTM C 1036	(1991) Flat Glass
ASTM C 1048	(1992) Heat-Treated Flat Glass - Kind HS, Kind FT Coated and Uncoated Glass
ASTM E 1300	(1994) Determining the Minimum Thickness and Type of Glass Required to Resist a Specified Load

GLASS ASSOCIATION OF NORTH AMERICA (GANA)

GANA-01	(1997) Glazing Manual

NATIONAL FIRE PROTECTION ASSOCIATION (NFPA)

NFPA 80	(1995) Fire Doors and Fire Windows
NFPA 252	(1995) Fire Tests of Door Assemblies
NFPA 257	(1996) Fire Tests for Window and Glass Block Assemblies

1.2 SUBMITTALS

Government approval is required for submittals with a "GA" designation;

submittals having an "FIO" designation are for information only. The following shall be submitted in accordance with Section 01330 SUBMITTAL PROCEDURES:

SD-01 Data

Glass; FIO. Glazing Accessories; FIO.

Manufacturer's descriptive product data, handling and storage recommendations, installation instructions, and cleaning instructions.

SD-04 Drawings

Glazing Materials and Accessories; GA. Glass Shelf Support System; GA.

Drawings showing complete details of the proposed setting methods, mullion details, edge blocking, size of openings, frame details, materials, and types and thickness of glass.

Complete details of glass shelf support system.

SD-13 Certificates

Glass; FIO.

Certificates stating that the glass meets the specified requirements. Labels or manufacturers marking affixed to the glass will be accepted in lieu of certificates.

SD-14 Samples

Glass; GA.

Two 8 x 10 inch samples of each of the following: insulating glass units.

1.3 SYSTEM DESCRIPTION

Glazing systems shall be fabricated and installed watertight and airtight to withstand thermal movement and wind loading without glass breakage, gasket failure, deterioration of glazing accessories, and defects in the work. Glazed panels shall comply with the safety standards, as indicated in accordance with ANSI Z97.1. Glazed panels shall comply with indicated wind/snow loading in accordance with ASTM E 1300.

1.4 DELIVERY, STORAGE AND HANDLING

Glazing compounds shall be delivered to the site in the manufacturer's unopened containers. Glass shall be stored indoors in a safe, well ventilated dry location in accordance with manufacturer's instructions, and shall not be unpacked until needed for installation. Glass shall not be stored on site over 1 month.

1.5 PROJECT/SITE CONDITIONS

Glazing work shall not be started until outdoor temperature is above 40 degrees F and rising, unless procedures recommended by glass manufacturer and approved by Contracting Officer are made to warm the glass and rabbet surfaces. Ventilation shall be provided to prevent condensation of moisture on glazing work during installation. Glazing work shall not be performed during damp or raining weather.

1.6 WARRANTY

1.6.1 General:

Warranties shall be in addition to, and not a limitation of, other rights the Owner may have under the Contract Documents.

1.6.2 Manufacturer's Special Project Warranty on Laminated Glass:

Provide written warranty signed by manufacturer of laminated glass agreeing to furnish f.o.b. point of manufacture, freight allowed project site, within specified warranty period indicated below, replacements for those laminated glass units which develop manufacturing defects. Manufacturing defects are defined as edge separation or delamination which materially obstructs vision through glass.

1. Warranty Period: Manufacturer's standard but not less than 4 years after date of substantial completion.

1.6.3 Manufacturer's Special Project Warranty on Coated Glass Products:

Provide written warranty signed by manufacturer of coated glass agreeing to furnish f.o.b. point of manufacture, freight allowed project site, within specified warranty period indicated below, replacements for those coated glass units which develop manufacturing defects. Manufacturing defects are defined as peeling, cracking or deterioration in metallic coating due to normal conditions and not due to handling or installation or cleaning practices contrary to glass manufacturer's published instructions.

1. Warranty Period: Manufacturer's standard but not less than 5 years after date of substantial completion.

1.6.4 Manufacturer's Special Project Warranty on Insulating Glass:

Provide written warranty signed by manufacturer of insulating glass agreeing to furnish f.o.b. point of manufacture, freight allowed project site, within specified warranty period indicated below, replacements for those insulating glass units developing manufacturing defects. Manufacturing defects are defined as failure or hermetic seal of air space (beyond that due to glass breakage) as evidenced by intrusion of dirt or moisture, internal condensation or fogging, deterioration of protected internal glass coatings, if any, and other visual indications of seal failure or performance; provided the manufacturer's instructions for handling, installing, protecting and maintaining units have been complied with during the warranty period.

1. Warranty Period: Manufacturer's standard but not less than 10

years after date of substantial completion.

1.6.5 Monolithic Opacified Spandrel

Manufacturer shall warrant the opacifier film on the spandrel to be free of peeling for a period of five years after Date of Substantial Completion. Warranty shall be signed by manufacturer.

PART 2 PRODUCTS

2.01 ACCEPTABLE MANUFACTURERS/FABRICATORS

Provide glass products of one of the following manufacturers/fabricators that meet or exceed the requirements of these specifications:

1. Advanced Coating Technology.
2. AFG Industries.
3. Falconer Glass Industries.
4. Ford Glass Division.
5. Guardian Industries.
6. Hordis Brothers.
7. Interpane Coatings, Inc.
8. Libbey Owens Ford.
9. PPG Industries.
10. Saint-Gobain.
11. Solar Seal Company.
12. Spectrum Glass Products.
13. Viracon, Inc.

2.2 GLASS MATERIALS AND PRODUCTS

2.2.1 Clear Float Glass:

ASTM C 1036,Type I-Transparent, Flat, Class 1-Clear, Quality q3.

2.2.2 Clear Heat Strengthened Glass:

ASTM C 1048, Condition A-Uncoated, Type I-Transparent, Flat, Class 1-Clear, Quality q3, Kind HS.

2.2.3 Clear Tempered Glass:

ASTM C1048, Condition A-Uncoated, Type I-Transparent, Flat, Class 1-Clear, Quality q3, Kind FT.

2.2.4 Laminated Safety Glass:

Provide two glass panes of equal thickness, laminated together with a polyvinyl butyl interlayer, and as follows:

1. Interlayer Color: White translucent, and clear, as scheduled.
2. Interlayer Material: Provide Monsanto "Saflex" or DuPont "Butacite", 0.060 in. thick.

2.2.5 Vertical Insulating Glass:

Provide factory assembled units of organically sealed panes of glass enclosing a hermetically sealed dehydrated air space, complying with ASTM E 774, and as follows:

1. Sealing System: Dual Seal.
2. Primary Sealant: Polyisobutylene.
3. Secondary Sealant: Silicone, General Electric IGS 3204 or IGS 3100, Rhodorsil Rhodortherm 542 or 543, or Dow Corning 982.
4. Spacer: Clear finish aluminum with welded, soldered, or bent corners.
5. Dessicant: Molecular sieve, silica gel, or blen of both.
6. Air Space Thickness: 1/2 in.
7. Outer Lite: Refer to Glazing Schedule at end of this Section.
8. Inner Lite: Refer to Glazing Schedule at end of this Section.

2.2.6 Ceramic Coated Spandrel Glass:

Provide ASTM C 1048, Heat Strengthened, Condition B - Ceramic Coated Spandrel Glass, Type I - Transparent, Class 1 - Clear, Quality q3, with ceramic frit coating applied to second, third, or fourth surface as scheduled at the end of this Section, and as follows:

1. Adhered Backing: Provide adhered scrim to ceramic-coated surface to keep broken glass in opening in compliance with Federal General Services Administration Construction Program for Public Building Service.

2. Color: Provide clear spandrel glass with ceramic frit in color as indicated in Section 09915, COLOR SCHEDULE.

2.2.7 Wire Glass:

ASTM C 1036, UL Listed, Fire Rated polished transparent wire glass complying with ANSI Z97.1. Provide Type II - Patterned and Wired Glass, Class 1 - Clear, Quality q8 - Glazing, Form 1 - Polished Both Sides, and as follows:

1. Thickness: 1/4 in. unless otherwise indicated as required.
2. Square Pattern: Mesh M2.

Wired glass for fire-rated windows shall bear an identifying UL label or the label of a nationally recognized testing agency, and shall be rated for 20 and 45 minutes as required when tested in accordance with NFPA 257. Wired glass for fire-rated doors shall be tested as part of a door assembly in accordance with NFPA 252.

2.2.8 Mirrors:

Glass for mirrors shall be Type I transparent flat type, Class 1-clear, Glazing Quality q1 1/4 inch thick conforming to ASTM C 1036. Mirrors shall be fully tempered at locations indicated. Glass color shall be clear. Glass shall be coated on one surface with silver coating, copper

protective coating, and mirror backing paint. Silver coating shall be highly adhesive pure silver coating of a thickness which shall provide reflectivity of 83 percent or more of incident light when viewed through 1/4 inch thick glass, and shall be free of pinholes or other defects. Copper protective coating shall be pure bright reflective copper, homogeneous without sludge, pinholes or other defects, and shall be of proper thickness to prevent "adhesion pull" by mirror backing paint. Mirror backing paint shall consist of two coats of special scratch and abrasion-resistant paint , and shall be baked in uniform thickness to provide a protection for silver and copper coatings which will permit normal cutting and edge fabrication.

1. Edges: Uniformly ground and polished.

2.3 GLAZING MATERIALS AND PRODUCTS

2.3.1 General:

Provide sealants and gaskets with performance characteristics suitable for applications indicated. Ensure compatibility of glazing sealants with insulated glass sealants, with laminated glass interlayers, and with any other surfaces in contact.

2.3.2 General Glazing Sealant:

Provide sealant with maximum Shore A hardness of 50. Provide one of the following:

1. Dow Corning 795.
2. General Electric Silglaze N 2500 or Contractors SCS-1000.
3. Rhodorsil 3B, 5C, or 6B.
4. Tremco Proglaze.

2.3.3 Weather Seal Sealant:

Provide non-acid curing sealant with movement range + 50%, ASTM C 719. Provide one of the following:

1. Dow Corning 79 .
2. General Electric Silpruf.
3. Rhodorsil 3B, 5C, or 6B.
4. Tremco Spectrum 2.

2.3.4 Structural Sealant:

Provide one of the following structural sealants recommended by manufacturer for structural glazing applications.

1. Dow Corning 795 or 983.
2. General Electric Ultraglaze SSG 4000 or SSG 4200.
3. Tremco Proglaze II.
4. Rhodorsil 70, or 90.
5. Dow Corning 999 for monolithic glass only.
6. General Electric 1200 for monolithic glass only.

7. Tremco Proglaze for monolithic glass only.

2.3.5 Gaskets and Weatherstrip for Structural Glazing:

Provide black cured silicone rubber glazing gaskets, sealant backers in glazing pockets, and continuous glass spacer pads. Provide Type I to prevent sealant adhesion and Type 2 where adhesion is desired.

2.3.6 Dense Elastomeric Compression Seal Gaskets:

Provide molded or extruded neoprene or EPDM gaskets, Shore A hardness of 75+5 for hollow profile, and 60+5 for solid profiles, ASTM C 864.

2.3.7 Cellular, Elastomeric Preformed Gaskets:

Provide extruded or molded closed cell, integral-skinned neoprene, Shore A 40+5, and 20% to 35% compression, ASTM C 509.

2.3.8 Preformed Glazing Tape:

Provide solvent-free butyl-polyisobutylene rubber with 100% solids content complying with AAMA A 804.1. Provide preformed glazing tape in extruded tape form. Provide one of the following:

1. Protective Treatments 303 or 60 .
2. Tremco Preshimmed 440.
3. Woodmont Chem-Tape 40.

2.3.9 Setting Blocks:

Provide neoprene or silicone blocks with Shore A hardness of 80-90. Provide products certified by manufacturer to be compatible with silicone sealants.

1. Shims: For shims used with setting blocks, provide same materials, hardness, length and width as setting blocks.
2. Structural Silicone Glazing: Provide silicone setting blocks where structural silicone occurs at sills and at insulated units with silicone edge seals.

2.3.10 Edge Blocks:

Provide neoprene or silicone as required for compatibility with glazing sealants. Provide blocks with Shore A hardness of 55+5.

2.3.11 Miscellaneous Glazing Materials:

Provide sealant backer rods, primers, cleaners, and sealers of type recommended by glass and sealant manufacturers.

2.3.12 Mirror Adhesive:

Mastic for setting mirrors shall be a polymer type mirror mastic resistant to water, shock, cracking, vibration and thermal expansion. Mastic shall

be compatible with mirror backing paint, and shall be approved by mirror manufacturer.

2.3.13 Sliding Glass Door Hardware

Provide sliding glass door hardware, equal to the Knape & Vogt P992ZC system with the 965 lock and 836 threaded finger pull.

2.3.14 Glass Shelf Support System

Provide a cable supported glass shelf system, equal to the Arakawa Hanging System. System shall include a ceiling-hung cable that is secured to the floor and has vertically adjustable shelf supports that slide along and lock unto the cable. The cable shall be 1/8 in. diameter stainless steel. All clips, fittings, and supports shall be stainless steel with polished finish.

Provide complete installation of system at locations indicated in conformance with approved shop drawings.

PART 3 EXECUTION

3.1 INSPECTION

The Installer/Glazier shall examine substrates, supports, and conditions under which this work is to be performed. Notify Contractor in writing, outlining conditions detrimental to proper completion of work. Do not proceed with work until unsatisfactory conditions are corrected. Beginning of installation will be construed as glazier accepting substrates and conditions.

3.2 PREPARATION

Openings and framing systems scheduled to receive glass shall be examined for compliance with approved shop drawings, GANA-01 and glass manufacturer's recommendations including size, squareness, offsets at corners, presence and function of weep system, face and edge clearance requirements and effective sealing between joints of glass-framing members. Detrimental materials shall be removed from glazing rabbet and glass surfaces and wiped dry with solvent. Glazing surfaces shall be dry and free of frost.

3.3 INSTALLATION

Glass and glazing work shall be performed in accordance with approved shop drawings, GANA-01, glass manufacturer's instructions and warranty requirements. Glass shall be installed with factory labels intact and removed only when instructed. Wired glass and shall be installed in accordance with NFPA 80. Edges and corners shall not be ground, nipped or cut after leaving factory. Springing, forcing or twisting of units during installation will not be permitted.

1. Prior to installing glass, clean glazing channels and framing members.

2. Remove coatings not completely bonded to substrates.
3. Remove lacquer from metal surfaces where in contact with sealants.
4. Protect glass from edge damage at all times. Use roller blocks and suction cups.
5. Replace glass with edge damage or other imperfections which could weaken glass.
6. Install setting and side blocks in locations recommended by referenced standards, and as required to prevent glass displacement.
7. Center glass in openings. Provide 1/2 in. minimum glass bite and 1/8 in. edge clearances.
8. Install glass and glazing in such a manner as to allow for easy replacement of glass and glazing without dismantling of frames.
9. Install glazing tapes and gaskets.
10. Prevent metal to glass contact at all times. Protect edges of insulated units from moisture and solvents.
11. Clean, prime, and install stops.

Mirrors: Adhere mirrors to walls plumb and level. Support mirror bottoms with stainless steel clips spaced at quarter-points \

Glass Shelf Support System: Install glass shelf support system, including all cables, fittings, anchors and attachments in configurations and at locations indicated on Drawings, and in conformance with approved shop drawings.

Gasket Glazing: Provide gasket glazing for all glass installed in frames at spaces two or more stories/floors in height including, but not limited to pools, gymnasiums, and atrium. Gasket glazing shall be in accordance with applicable codes, standards and regulations.

3.4 CLEANING

Upon completion of project, outside surfaces of glass shall be washed clean and the inside surfaces of glass shall be washed and polished in accordance with glass manufacturer's recommendations.

3.5 PROTECTION

Glass work shall be protected immediately after installation. Glazed openings shall be identified with suitable warning tapes, cloth or paper flags, attached with non-staining adhesives. Reflective glass shall be protected with a protective material to eliminate any contamination of the reflective coating. Protective material shall be placed far enough away from the coated glass to allow air to circulate to reduce heat buildup and moisture accumulation on the glass. Glass units which are broken, chipped, cracked, abraded, or otherwise damaged during construction activities shall be removed and replaced with new units.

3.6 GLASS SCHEDULE

Provide following glass types. Types are keyed to drawings:

1. Type 1: 1 in. insulating glass, both lites clear annealed.

2. Type 2: 1 in. insulating glass, both lites clear tempered.
3. Type 3: 1 in. insulating glass, one lite clear annealed; one lite laminated with white translucent interlayer (laminated unit to face Gymnasium).
4. Type 4: 1 in. insulating spandrel glass, one lite clear; one lite ceramic coated spandrel glass with ceramic frit on #4 surface with opacifier (typical at and above entrances).
5. Type 5: 1 in. insulating spandrel glass, one lite laminated with white translucent interlayer (laminated lite faces Pool side); one lite ceramic coated spandrel glass with ceramic frit on #3 surface with no opacifier (typical between Sports Medicine and Pool).
6. Type 6: 1/4 in. monolithic clear tempered glass.
7. Type 7: 1/4 in. wire glass.
8. Type 8: 1/4 in. heat strengthened spandrel glass, with ceramic frit on #2 surface with opacifier.
9. Type 9: 1/4 in. annealed mirror glass.
10. Type 10: 1/4 in. tempered mirror glass.
11. Type 11: 1/2 in. clear tempered laminated glass with clear interlayer.
12. Type 12: 3/4 in. clear tempered laminated glass with white translucent interlayer.

-- End of Section --

SECTION 08900

GLAZED CURTAIN WALLS

PART 1 GENERAL

1.1 REFERENCES

The publications listed below form a part of this specification to the extent referenced. The publications are referred to in the text by basic designation only.

American Welding Society (AWS)

AWS D1.2	Structural Welding Code--Aluminum

American Society for Testing and Materials (ASTM)

ASTM B 209	(1995) Aluminum and Aluminum-Alloy Sheet and Plate (Metric)
ASTM B 221	(1996) Aluminum and Aluminum-Alloy Extruded Bars, Rods, Wire, Profiles, and Tubes (Metric)
ASTM B 429	Aluminum-Alloy Extruded Structural Pipe and Tubing

1.2 WORK INCLUDED

The work of this section includes, but is not limited to the following:

1. Design and engineering of glazed aluminum curtain wall systems.
2. Finished aluminum framing components for glazed curtain wall systems.
3. Glass and glazing for curtain wall systems.
4. Aluminum entrance doors at interior locations.

1.3 SUBMITTALS

Government approval is required for submittals with a "GA" designation; submittals having an "FIO" designation are for information only. The following shall be submitted in accordance with Section 01330 SUBMITTAL PROCEDURES:

SD-01 Data

Curtain Wall System Components; GA.

Product Data for each product specified, including details of construction

relative to materials, dimensions of individual components, profiles, and finishes.

SD-04 Drawings

Curtain Wall System Components; GA.

Shop Drawings showing fabrication and installation of glazed aluminum curtain wall system including plans, elevations, sections, details of components, and attachments to other units of Work.

1. For installed products indicated to comply with certain design loadings, include structural analysis data signed and sealed by the qualified professional engineer responsible for their preparation.

SD-09 Reports

Product Test Reports; GA.

Product test reports from a qualified independent testing agency evidencing compliance of glazed aluminum curtain wall system with requirements based on comprehensive testing of manufacturer's standard systems.

Field Test Reports; GA.

Field test reports from a qualified independent inspecting and testing agency indicating and interpreting test results relative to compliance with performance requirements of glazed aluminum curtain wall system.

SD-13 Certificates

Welder Certificates; FIO.

Welder certificates indicating that welders comply with requirements specified in "Quality Assurance" Article.

Installer Certificates; FIO.

Installer certificates signed by manufacturer certifying that installers comply with requirements in "Quality Assurance" Article.

SD-14 Samples

Color Samples; GA.

Samples for verification of each type of exposed finish required in manufacturer's standard sizes. Where finishes involve normal color and texture variations, include Sample sets showing the full range of variations expected.

Cutaway Samples; GA.

Cutaway Sample of each vertical-to-horizontal intersection of system, made

from 12-in. lengths of full-size components and showing details of the following:

1. Joinery.
2. Anchorage.
3. Expansion provisions.
4. Glazing.
5. Flashing and drainage.

1.4 QUALITY ASSURANCE

1.4.1 Testing Agency Qualifications:

To qualify for approval, an independent testing agency must demonstrate to Contracting Officer's satisfaction, based on evaluation of agency-submitted criteria conforming to ASTM E 699, that it has the experience and capability to satisfactorily conduct the testing indicated without delaying the Work.

1.4.2 Professional Engineer Qualifications:

A professional engineer who is legally qualified to practice in the jurisdiction where Project is located and who is experienced in providing engineering services of the kind indicated. Engineering services are defined as those performed for installations of glazed aluminum curtain wall systems that are similar to those indicated for this Project in material, design, and extent.

1.4.3 Installer Qualifications:

Engage an experienced installer to assume engineering responsibility and perform work of this Section who has specialized in installing glazed aluminum curtain wall systems similar to those required for this Project and who is acceptable to manufacturer.

a. Engineering Responsibility: Prepare data for glazed aluminum curtain wall systems, including drawings, based on testing and engineering analysis of manufacturer's standard units in assemblies similar to those indicated for this Project.

1.4.4 Source Limitations:

Obtain each type of glazed aluminum curtain wall system from one source and by a single manufacturer.

1.4.5 Product Options:

Information on Drawings and in Specifications establishes requirements for system's aesthetic effects and performance characteristics. Aesthetic effects are indicated by dimensions, arrangements, alignment, and profiles of components and assemblies as they relate to sight lines and relationships to one another and to adjoining construction. Performance characteristics are indicated by criteria subject to verification by one or more methods. Other manufacturers' systems with equal performance

characteristics will be considered.

a. Do not modify intended aesthetic effects, as judged solely by Contracting Officer, except with Contracting Officer's approval and only to the extent needed to comply with performance requirements. Where modifications are proposed, submit comprehensive explanatory data to Contracting Officer for review.

1.4.6 Welding Standards:

Comply with applicable provisions of AWS D1.2.

Engage welders who have satisfactorily passed AWS qualification tests for welding processes involved and who are currently certified for these processes.

1.4.7 Preinstallation Conference:

Conduct conference at Project site. Review methods and procedures related to glazed aluminum curtain wall system including, but not limited to, the following:

a. Inspect and discuss condition of substrate and other preparatory work performed by other trades.

b. Review structural loading limitations.

c. Review and finalize construction schedule and verify availability of materials, Installer's personnel, equipment, and facilities needed to make progress and avoid delays.

d. Review required inspecting, testing, and certifying procedures.

e. Review weather and forecasted weather conditions and procedures for coping with unfavorable conditions.

1.5 SYSTEM DESCRIPTION

1.5.1 General:

Provide glazed aluminum curtain wall system that has the following capabilities based on testing manufacturer's standard units in assemblies similar to those indicated for this Project:

a. Withstands loads and thermal and structural movement requirements indicated without failure. Failure includes the following:

1. Air infiltration and water penetration exceeding specified limits.
2. Framing members transferring stresses, including those caused by thermal and structural movement, to glazing units.

b. Glazing is physically and thermally isolated from framing members.

c. System is reglazable from the exterior.

1.5.2 Wind Loads:

Provide glazed aluminum curtain wall system, including anchorage, capable of withstanding wind-load design pressures calculated according to requirements of authorities having jurisdiction or the American Society of Civil Engineers' ASCE 7, "Minimum Design Loads for Buildings and Other Structures," 6.4.2, "Analytical Procedure," whichever are more stringent.

a. Deflection of framing members in a direction normal to wall plane is limited to 1/175 of clear span or 3/4 in., whichever is smaller, unless otherwise required.

b. Test Performance: Provide glazed aluminum curtain wall system that does not evidence material failures, structural distress, or permanent deformation of main framing members exceeding 0.2 percent of clear span when tested according to ASTM E 330.

1. Test Pressure: 150 percent of inward and outward wind-load design pressures.

2. Duration: As required by design wind velocity; fastest 1 mile (1.609 km) of wind for relevant exposure category.

1.5.3 Dead Loads:

Provide glazed aluminum curtain wall system members that do not deflect an amount which will reduce glazing bite below 75 percent of design dimension when carrying full dead load of system and glazing. Provide a minimum 1/8-in. clearance between members and top of fixed panels, glazing, or other fixed part immediately below. Provide a minimum 1/16-in. clearance between members and operable windows and doors.

1.5.4 Live Loads:

Provide glazed aluminum curtain wall system, including anchorage, that accommodates supporting structure's deflection from uniformly distributed and concentrated live loads required without failure of materials or permanent deformation.

1.5.5 Air Infiltration:

Provide glazed aluminum curtain wall system with permanent resistance to air leakage through system of not more than 0.06 cfm/sq. ft. of fixed wall area when tested according to ASTM E 283 at a static-air-pressure difference of 6.24 lbf/sq. ft.

a. Provide operable windows with permanent resistance to air leakage complying with AAMA 101 requirements for types of windows indicated.

1.5.6 Water Penetration:

Provide glazed aluminum curtain wall system that does not evidence water leakage when tested according to ASTM E 331 at minimum differential pressure of 20 percent of inward acting wind-load design pressure as defined by ASCE 7, "Minimum Design Loads for Buildings and Other Structures," but not less than 10 lbf/sq. ft.

1.5.7 Thermal Movements:

Provide glazed aluminum curtain wall system, including anchorage, that accommodates thermal movements of system and supporting elements resulting from the following maximum change (range) in ambient and surface temperatures without buckling, damaging stresses on glazing, failure of joint sealants, damaging loads on fasteners, noise or vibration, and other detrimental effects.

a. Temperature Change (Range): 120 deg F., ambient; 180 deg F., material surfaces.

1.5.8 Structural Support Movement:

Provide glazed aluminum curtain wall system that accommodates structural movements including, but not limited to, sway, twist, and deflection.

1.5.9 Condensation Resistance:

Provide glazed aluminum curtain wall system with condensation-resistance factor (CRF) of not less than 55 when tested according to AAMA 1503.1.

1.5.10 Average Thermal Conductance:

Provide glazed aluminum curtain wall system with an average U-value of not more than 0.66 Btu/sq. ft. x h x deg F. when tested according to AAMA 1503.1.

1.5.11 Dimensional Tolerances:

Provide glazed aluminum curtain wall system, including anchorage, that accommodates dimensional tolerances of building frame and other adjacent construction.

1.6 FIELD TESTS

1.6.1 Field Testing:

Owner may employ an independent testing agency to perform tests on in-place curtain wall systems and components. Cooperate with testing agency at all times during field tests.

1.6.2 Leakage:

Tests will generally include a prolonged water spray test similar to AAMA 501.3. Any uncontrolled leakage within the curtain wall system or between the curtain wall system and adjacent construction will be considered a

failure.

1.6.3 Failures:

Contractor shall pay for all remedial work and all retesting required because of failures.

1.7 DELIVERY, STORAGE AND HANDLING

Deliver materials and products in unopened, factory labeled packages. Store and handle in strict compliance with manufacturer's instructions and recommendations. Store under cover and protect from weather damage.

Sequence deliveries to avoid delays, but minimize on-site storage.

1.8 WARRANTIES

1.8.1 General Warranty:

The special warranty specified in this Article shall not deprive the Owner of other rights the Owner may have under other provisions of the Contract Documents and shall be in addition to, and run concurrent with, other warranties made by the Contractor under requirements of the Contract Documents.

1.8.2 Special Warranty:

Submit a written warranty executed by the manufacturer agreeing to repair or replace components of a glazed aluminum curtain wall system that fail in materials or workmanship within the specified warranty period of 2 years from date of Substantial Completion. Failures include, but are not limited to, the following:

a. Structural failures including, but not limited to, excessive deflection.
b. Noise or vibration caused by thermal movements.
c. Failure of system to meet performance requirements.
d. Deterioration of metals, metal finishes, and other materials beyond normal weathering.
e. Failure of operating components to function normally.
f. Water leakage.
g. Glazing breakage.

1.8.3 Finish System Warranty:

Provide written warranty, signed by both manufacturer and finisher, agreeing to repair or replace work which exhibits defects in material finishes or workmanship. "Defects" is defined to include, but not limited to, peeling, chipping, chalking, fading or abnormal aging or deterioration, and failure to perform as required.

a. Warranty Period: 5 years from the date of substantial completion.

PART 2 PRODUCTS

2.1 ACCEPTABLE MANUFACTURERS

Provide curtain wall systems of one of the following manufacturers that meet or exceed the requirements of these specifications:

a. Kawneer Company, Inc.
b. EFCO Corp.
c. Wausau Metals Corporation
d. Butler Manufacturing Company; Vistawall Architectural Products

2.2 MATERIALS AND PRODUCTS

2.2.1 General:

Provide pre-engineered, standard or custom assemblies complying with design and performance requirements. Provide manufacturer's standard or custom assembly of structural framing and supporting members, insulated glass, and glazing stops, and brake-formed sheet metal trim.

a. Provide manufacturer' standard system, glazed from the exterior.

2.2.2 Design and Appearance:

The drawings and specifications are based upon Kawneer's 1600 Series Curtain Wall System, 2-1/2 in. wide x 7-1/2 in. deep, thermally-broken system. Other manufacturer's standard systems are acceptable that closely match profiles and details indicated, and if all performance requirements are properly certified.

2.2.3 Aluminum:

Alloy and temper recommended by manufacturer for type of use and finish indicated, complying with the requirements of standards indicated below.

a. Sheet and Plate: ASTM B 209.
b. Extruded Bars, Rods, Shapes, and Tubes: ASTM B 221, minimum 0.125 in. thick.
c. Extruded Structural Pipe and Tubes: ASTM B 429.

2.2.4 Welding Rods and Bare Electrodes:

AWS A5.10.

2.2.5 Steel Reinforcement:

ASTM A 36 (ASTM A 36M) for structural shapes, plates, and bars; ASTM A 611 for cold-rolled sheet and strip; or ASTM A 570 (ASTM A 570M) for hot-rolled sheet and strip.

2.2.6 Glass and Glazing:

Glazing as specified in Section 08810, GLASS AND GLAZING.

2.2.7 Glazing Sealants and Fillers:

As specified in Section 08810, GLASS AND GLAZING.

2.2.8 Framing System Gaskets and Joint Fillers:

As recommended by manufacturer for joint type.

2.2.9 Sealants and Joint Fillers:

Sealants and joint fillers for joints within glazed aluminum curtain wall system as specified in Section 07900, JOINT SEALING.

2.2.10 Firesafing:

Firesafing materials as specified in Section 07840, FIRESTOPPING.

2.2.11 Bituminous Paint:

Cold-applied asphalt-mastic paint complying with SSPC-Paint 12 requirements, except containing no asbestos, formulated for 30-mil thickness per coat.

2.3 COMPONENTS

2.3.1 Operable Windows:

Conforming to requirements of AAMA 101 for types indicated, unless otherwise indicated.

a. Grade: Heavy Commercial.
b. Screens: Metal wire fabric screens conforming to requirements of FS RR-W-365A.

2.3.2 Brake Metal Trim

Provide brake-formed aluminum sheet in profiles indicated, formed from minimum 0.10 in. thick aluminum sheet. Provide back-routing for tight corner formations as required. Radius of bends shall be maximum 1/8 in. Provide all end closures with base metal thickness to match brake metal components. Provide positive drainage and weepage of all components.

2.3.3 Aluminum Entrance Doors

Aluminum entrance doors shall be Series 500 Heavy Stile factory-glazed aluminum doors with standard aluminum frames, manufactured by Kawneer Company, Inc., or approved equal.

Aluminum entrance doors shall be stile and rail type swing doors. Aluminum shall be extruded aluminum conforming to ASTM B 221, 0.125 in. thick for door stiles and 0.050 in. thick for glazing molding.

1. Sections shall be of sizes and profiles indicated; shall present straight, sharply defined lines and arrises; and shall be free

from defects impairing strength, durability, and appearance.

2. Fasteners where exposed shall be aluminum stainless steel or plated steel conforming to ASTM A 164.

Each door shall be factory glazed with 1/4 in. thick, clear tempered glass set in neoprene glazing gasket. Glass shall conform to requirements of Section 08810, GLASS AND GLAZING.

2.3.4 Brackets and Reinforcements:

Provide manufacturer's standard high-strength aluminum brackets and reinforcements. Provide nonstaining, nonferrous shims for aligning system components.

2.3.5 Fasteners and Accessories:

Manufacturer's standard corrosion-resistant, nonstaining, nonbleeding fasteners and accessories compatible with adjacent materials. Finish exposed portions to match glazed aluminum curtain wall.

a. At movement joints, use slip-joint linings, spacers, slotted clips, and sleeves of material and type recommended by manufacturer.
b. Where fasteners anchor into aluminum less than 0.125 in. thick, provide reinforcement to receive fastener threads.
c. Use exposed fasteners with countersunk Phillips screw heads finished to match framing members, unless otherwise indicated.

2.3.6 Anchors:

3-way adjustable anchors that accommodate fabrication and installation tolerances in material and finish compatible with adjoining materials and recommended by manufacturer.

2.3.7 Concrete and Masonry Inserts:

Hot-dip galvanized cast-iron, malleable-iron, or steel inserts complying with ASTM A 123 or ASTM A 153 requirements.

2.3.8 Concealed Flashing:

Dead-soft, 0.018-in. thick stainless steel, complying with ASTM A 666, of type selected by manufacturer for compatibility with system.

2.4 FABRICATION

2.4.1 General:

Fabricate glazed aluminum curtain wall system according to Shop Drawings. Fabricate components that, when assembled, will have accurately fitted joints with ends coped or mitered to produce hairline joints free of burrs and distortion. After fabrication, clearly mark components to identify their locations in Project according to Shop Drawings.

2.4.2 Forming:

Form shapes with sharp profiles, straight and free of defects or deformations, before finishing.

2.4.3 Preparation of Components:

Prepare components to receive concealed fasteners and anchor and connection devices.

2.4.4 Water Drainage:

Fabricate components to drain water passing joints, condensation occurring in glazing channels, condensation occurring within framing members, and moisture migrating within the system to the exterior.

2.4.5 Welding:

Weld components to comply with referenced standard and Shop Drawings, unless otherwise indicated. Weld before finishing components. Weld in concealed locations to greatest extent possible to minimize distortion or discoloration of finish. Remove weld spatter and welding oxides from exposed surfaces by descaling or grinding.

2.4.6 Glazing Pockets:

Provide minimum clearances for thickness and type of glass indicated according to FGMA's "Glazing Manual."

2.4.7 Metal Protection:

Where aluminum will contact dissimilar metals, protect against galvanic action by painting contact surfaces with primer or by applying sealant or tape recommended by manufacturer for this purpose. Where aluminum will contact concrete or masonry, protect against corrosion by painting contact surfaces with bituminous paint.

2.4.8 Frame Units:

Factory assemble frame units according to Shop Drawings to greatest extent possible. Rigidly secure nonmovement joints. Seal joints watertight, unless otherwise indicated. Assemble components to drain water passing joints, condensation occurring in glazing channels, condensation occurring within framing members, and moisture migrating within the system to the exterior.

2.4.9 Glass and Glazing:

Install glazing according to Shop Drawings. Comply with requirements of Section 08810, GLASS AND GLAZING, unless otherwise indicated.

2.5 FINISH

Comply with NAAMM "Metal Finishes Manual" for recommendations relative to applying and designating finishes.

Finish designations prefixed by AA conform to the system established by the Aluminum Association for designating aluminum finishes.

Finish aluminum curtain wall components to match other aluminum components on the project, including aluminum louvers; aluminum windows; and exterior metal wall panels.

High-Performance Organic Coating Finish: AA-C12C42R1x (Chemical Finish: cleaned with inhibited chemicals; Chemical Finish: acid chromate-fluoride-phosphate conversion coating; Organic Coating: as specified below). Prepare, pretreat, and apply coating to exposed metal surfaces to comply with coating and resin manufacturer's instructions.

1. Fluoropolymer 3-Coat Coating System: Provide 3-coat, thermocured, metallic Finnish system composed of specially formulated inhibitive primer, fluoropolymer color coat, and clear fluoropolymer topcoat, with both color coat and clear topcoat containing not less than 70 percent polyvinylidene fluoride resin by weight; complying with AAMA 605.2. Coating shall be equal to PPG Duranar XL.

2. Color and Gloss: As indicated in Section 09915, COLOR SCHEDULE.

2.5.1 Salt Spray Test

A sample of the sheets shall withstand a salt spray test for a minimum of 3000 hours in accordance with ASTM B 117, including the scribe requirement in the test. Immediately upon removal of the panel from the test, the coating shall receive a rating of not less than 8F, few no. 8 blisters, as determined by ASTM D 714.

2.5.2 Formability Test

When subjected to testing in accordance with ASTM D 522 Method B, 1/8 inch diameter mandrel, the coating film shall show no evidence of fracturing to the naked eye.

2.5.3 Accelerated Weathering, Chalking Resistance and Color Change

A sample of the sheets shall be tested in accordance with ASTM D 4587. The coating shall withstand the weathering test without cracking, peeling, blistering, loss of adhesion of the protective coating, or corrosion of the base metal. Protective coating that can be readily removed from the base metal with tape in accordance with ASTM D 3359, Test Method B, shall be considered as an area indicating loss of adhesion. Following the accelerated weathering test, the coating shall have a chalk rating not less than No. 8 in accordance with ASTM D 4214 test procedures, and the color change shall not exceed 5 CIE or Hunter Lab color difference (delta E) units in accordance with ASTM D 2244. For sheets required to have a low gloss finish, the chalk rating shall be not less than No. 6 and the color

difference shall be not greater than 7 units.

2.5.4 Humidity Test

When subjected to a humidity cabinet test in accordance with ASTM D 2247 for 3000 hours, a scored panel shall show no signs of blistering, cracking, creepage or corrosion.

2.5.5 Impact Resistance

Factory-painted sheet shall withstand direct and reverse impact in accordance with ASTM D 2794 0.500 inch diameter hemispherical head indenter, equal to 1.5 times the metal thickness in mils, expressed in inch-pounds, with no loss of adhesion.

2.5.6 Abrasion Resistance Test

When subjected to the falling sand test in accordance with ASTM D 968, Method A, the coating system shall withstand a minimum of 170 - 220 liters of sand before the appearance of the base metal. The term "appearance of base metal" refers to the metallic coating on aluminum base metal.

PART 3 EXECUTION

3.1 INSPECTION

The Installer/Erector shall examine substrates, supports, and conditions detrimental to the proper completion of the work. Do not proceed with work until unsatisfactory conditions are corrected. Beginning of installation will be construed as installer accepting substrates and conditions.

3.2 INSTALLATION

3.2.1 General Installation Requirements:

Strictly comply with manufacturer's instructions and recommendations, except where more restrictive requirements are specified in this section.

3.2.2 Installation:

Install units plumb, level, in alignment and plane without warp or rack. Anchor securely in place. Match profiles, sizes and spacings indicated on approved shop drawings.

3.2.3 Inspection:

Inspect all components of the curtain wall system and remove any bent, twisted, marred or otherwise damaged materials from the site immediately.

3.2.4 Coordination:

Coordinate installation of curtain wall with adjacent construction. Anchor all work securely to supporting structures. Allow for differential and thermal movement. Isolate dissimilar materials by application of heavy

coats of bituminous paint, 40 mil neoprene sheeting, or other effective isolators approved by the Contracting Officer.

3.2.5 Glass and Glazing:

Glaze glass and insulating panels into glazing systems in strict compliance with Section 08810, GLASS AND GLAZING, and manufacturer's recommendations.

3.3 TOLERANCES

The following allowable installed tolerances are allowable variations from locations and dimensions indicated by the Contract Documents. Do not add these tolerances to any allowable tolerances indicated for other work.

a. Plumb: 1/8 inch in 10 ft.; 1/4 inch in 40 ft.
b. Level: 1/8 inch in 20 ft.; 1/4 inch in 40 ft.
c. Alignment: Where surfaces abut in line, limit offset from true alignment to 1/16 in.; where a reveal or protruding element separates aligned surfaces by less than 2 in., limit offset to 1/2 in.
d. Location: Limit variation from plane or location shown on Shop Drawings to 1/8 in. in 12 ft.; 1/2 in. over total length.

3.4 FIELD QUALITY CONTROL

3.4.1 Testing Agency:

Engage a qualified independent testing agency to perform testing indicated.

3.4.2 Water Spray Test:

After completing the installation of a minimum 2-bay area of glazed aluminum curtain wall system, test system for water penetration according to AAMA 501.2.

Repair or remove Work that does not meet requirements or that is damaged by testing; replace to conform to specified requirements.

3.5 CLEANING, TOUCH-UP, AND PROTECTION

Clean exposed surfaces using manufacturer recommended materials and methods. Remove and replace work which cannot be successfully cleaned.

Touch-up damaged coatings and finishes. Eliminate all visible evidence of repair.

Provide temporary protection at all times during the course of the work, and immediately after completion to ensure the work of this Section is not damaged or deteriorated in any way at time of final acceptance. Remove temporary protections and reclean as necessary immediately prior to final acceptance.

-- End of Section --

-

SECTION 08950

TRANSLUCENT WALL AND SKYLIGHT SYSTEMS

PART 1 GENERAL

1.1 REFERENCES

The publications listed below form a part of this specification to the extent referenced. The publications are referred to in the text by basic designation only.

AMERICAN ARCHITECTURAL MANUFACTURER'S ASSOCIATION (AAMA)

AAMA 501	Methods of Test
AAMA 1503.01	(1988) Thermal Transmittance and Condensation Resistance of Wall Sections

American Society for Testing and Materials (ASTM)

ASTM C236	(1993) Thermal Conductance and Transmittance of Built-Up Sections by Means of The Guarded Hot Box
ASTM C297	(1994) Tension Test of Flat Sandwich Constructions in Flatwise Plane
ASTM D635	(1996) Rate of Burning and/or Extent and Time of Burning of Self-Supporting Plastics in a Horizontal Position
ASTM D1002	(1994) Strength Properties of Adhesives in Shear by Tension Loading (Metal-to-Metal)
ASTM D1037	(1996) Evaluating the Properties of Wood-Base Fiber and Particle Panel Materials
ASTM D2244	(1993) Instrumental Evaluation of Color Differences of Opaque Materials
ASTM E84	(1999) Surface Burning Characteristics of Building Materials
ASTM E283	(1991) Determining the Rate of air Leakage Through Exterior Windows, Curtain Walls, and Doors Under Specified Pressure Difference Across the Specimen

ASTM E331	(1996) Test Method for Water Penetration of Exterior Windows, Curtain Walls, and Doors by Uniform Static Air Pressure Differenc

NATIONAL FENESTRATION RATING COUNCIL (NFRC)

NFRC-100	(1997) Procedure for Determining Fenestration Product U-Factor

1.2 SUBMITTALS

Government approval is required for submittals with a "GA" designation; submittals having an "FIO" designation are for information only. The following shall be submitted in accordance with Section 01330 SUBMITTAL PROCEDURES:

SD-01 Data

Translucent Panel System; GA.

Submit complete manufacturer's product data for approval, consisting of complete product description and specifications, test data, installation instructions, and other pertinent technical data required for complete product and product use information.

SD-04 Drawings

Translucent Panel System; GA.

Show adaptation of manufacturer's standard aluminum skylight and curtain wall system to the project; include typical unit elevations at ½ inch scale and details at 3 inch scale. Show dimensions, profiles of members, anchorage system, interface with building construction. Include setting drawings, templates, and directions for the installation of anchor bolts and other anchorages installed as a unit of work under other sections. Indicate where and how the system deviates from Contract Drawings and Specifications. Show section moduli of wind-loadbearing members and calculations of stresses and deflections. Provide material properties and other information needed for structural analysis including computations, prepared, signed, or, and sealed by a professional engineer licensed to practice, in the jurisdiction where the project is located. Include complete structural calculations of the work, as part of, or attached to, shop drawings.

SD-09 Reports

Product Test Reports; FIO.

Test reports to be furnished by translucent wall and skylight system manufacturer. The manufacturer shall submit certified test reports made by an independent testing organization for each type and class of panel system. Reports shall verify that the material will meet all performance requirements of this specification. Previously completed test reports will

be acceptable if by current manufacturer and indicative of products used on this project. Test reports required are:

a. Flame Spread and smoke development (ASTM E84)

b. Burn Extent (ASTM D635).

c. Color Difference (ASTM D2244).

d. Impact Strength (Free Falling Ball Method).

e. Tensile Bond Strength (ASTM C297) after 5 different aging by ASTM D 1037

f. Shear Bond Strength (ASTM D1002) after 5 different aging conditions.

g. Beam Bending Strength (ASTM E 72).

h. Insulation "U" Factor (by NFRC-100; ASTM C236, ASTM E1423, and ASTM C1199).

i. Complete energy calculations.

SD-13 Certificates

Installer Certificates; FIO.

Signed by manufacturer certifying that installers comply with requirements.

Glazing Materials; FIO.

Certificates stating that the plastic sheets and glazing materials meet the specified requirements.

SD-14 Samples

Samples for Selection; GA.

Submit duplicate samples of translucent wall and skylight system materials in proposed colors and finishes.

Samples for Verification; GA.

For each exposed finish required, in same thickness and material indicated for the Work and in size indicated below. If finishes involve normal color variations, include sample sets consisting of two or more units showing the full range of variations expected.

1. Factory-Finished Aluminum: 12-inch long sections.
2. Fiberglass Sandwich Panels: 12-inch square units.

Cutaway Samples; GA.

Of framing intersection, made from 12-inch long lengths of full-size components and showing details of the following:

1. Primary framing members.
2. Joinery.
3. Expansion provisions.
4. Fiberglass sandwich panels.
5. Methods of drainage.

1.3 WORK INCLUDED

Translucent panel system consists of a pre-assembled structural composite sandwich panel formed by permanently bonding specifically formulated, reinforced, translucent fiberglass sheets to a grid core constructed of reinforced, translucent fiberglass sheets to a grid core constructed of interlocked, extruded structural aluminum I-Beams. The translucent panel system shall be provided in the locations indicated on Contract Drawings.

1.3.1 Primary Components

Primary components of the translucent skylight and wall panel system include:

a. Fiberglass panels with a mechanically interlocked aluminum grid core.

b. The superstructure shall be pre-fabricated of extruded aluminum alloy 6005-T5 or 6061-T6 box beams. Ferrous metals shall not be allowed. All parts shall be pre-assembled at the factory, and knocked down for shipment.

c. Anchors, shims, fasteners, inserts, accessories, and support brackets.

d. Transparent panels as part of the translucent panel skylight system.

e. Membrane and aluminum flashing.

f. Seismic expansion joint - Structural aluminum header tube on either side of ridge integrating with an expandable bellows type flashing allowing for both vertical and horizontal movement, running continuously the length of the skylight, as part of the total skylight system.

g. Anchorage for lightning protection system components.

1.3.2 System Performance Requirements

General: Provide the manufacturer's stock translucent panel system, adapted to the application indicated, that complies with performance requirements specified as demonstrated by testing the manufacturers corresponding stock systems according to test methods indicated.

Provide translucent wall and skylights capable of withstanding loads and thermal and structural movements required without failure. Failure includes the following:

1. Supporting-frame deflection exceeding specified limits.
2. Sandwich-panel deflection exceeding manufacturer's recommended limits or causing panel failure.
3. Thermal stresses transferred to the building structure.
4. Noise or vibration created by thermal and structural movement and wind.
5. Loosening or weakening of fasteners, attachments, and other components.
6. Sealant failure.

1.3.2.1 Structural Loads:

Provide wall and skylights, including anchorage, capable of withstanding the effects of the design loads required by the Uniform Building Code, when supporting full dead loads except where greater loadings are required herein:

1. Wind Loads: 33 pounds per square foot, pressure or suction.
2. Dead Loads: Not to exceed 18 pounds per square foot.
3. Roof Loads: As follows:

   a. Concentrated Load: 300 lbf applied to translucent wall and skylight at location that produces the most severe stress or deflection.
   b. Live Load (Snow): 27 pounds per square foot, on horizontal projected surface, plus drifting where applicable at elevator machine room.

4. Seismic Loads: As indicated on Drawings, or as required by Code.

1.3.2.2 Skylight Supporting-Frame-Member Deflection Limits:

Skylight Supporting-Frame-Member Deflection Limits shall be as follows:

1. Deflection of the entire length of framing members in direction normal to skylight plane is limited to 1/240 of clear span, unless otherwise indicated.

2. Deflection of the entire length of framing members for spans exceeding 15 feet is limited to 1/360 of clear span.

1.3.2.3 Thermal Movement:

Provide translucent walls and skylights that allow for thermal movement resulting from the following maximum change (range) in ambient and surface temperatures by preventing buckling, sealant failure, and other detrimental effects.

1. Temperature Change (Range): 120 deg F, ambient; 180 deg F, material surfaces.

Translucent wall and skylight systems shall accommodate thermal movement within the system and shall not transfer any thermal movement within the system and shall not transfer any thermal stress into the surrounding work. Provide thermal movement framing, fittings, flashings and the like to maintain required system performance.

1.3.2.4 Air Infiltration:

Provide translucent wall and skylights with maximum air leakage of 0.06 cfm/sq. ft. of surface when tested according to ASTM E283 at a minimum static-air-pressure differential of 1.57 pounds force per square foot (Pascals).

1.3.2.5 Water Penetration:

Provide translucent wall and skylights that do not evidence water penetration, as defined in AAMA 501, when tested according to ASTM E331 at a minimum static pressure differential of 20 percent of positive design wind load, but not less than 6.24 pounds force per square foot (Pascals), or more than 12 pounds force per square foot.

1.3.2.6 Condensation Requirements:

The translucent panel systems shall be of construction that has been tested in accordance with AAMA 1503.01 and certified by the manufacturer to provide a condensation resistance factor (CRF) of at least 47.

1.4 RELATED WORK

Examine Contract Documents for requirements that affect work of this Section. Other Specification Sections that directly relate to work of this Section include, but are not limited to:

1. Section 05120, STRUCTURAL STEEL; Structural steel framing to receive translucent skylight system.
2. Section 06100, ROUGH CARPENTRY; Wood blockings at skylight curbs.
3. Section 07900, JOINT SEALING; Joint sealing, except as specified herein.

1.5 QUALITY ASSURANCE

1.5.1 Installer Qualifications:

An experienced installer to assume engineering responsibility who has specialized in installing translucent wall and skylights similar to those indicated for this Project and who is acceptable to manufacturer.

1.5.2 Professional Engineer Qualifications:

A professional engineer who is legally qualified to practice in jurisdiction where Project is located and who is experienced in providing engineering services of the kind indicated. Engineering services are defined as those performed for installations of translucent wall and

skylights that are similar to those indicated for this Project in material, design, and extent.

1.5.3 Product Requirements:

Information on Drawings and in Specifications establishes requirements for aesthetic effects and performance characteristics of translucent walls and skylights. Aesthetic effects are indicated by dimensions, arrangements, alignment, and profiles of components and assemblies as they relate to sightlines, to one another, and to adjoining construction. Performance characteristics are indicated by criteria subject to verification by one or more methods including testing or in-service performance.

1. The Contractor shall provide all required structural design and supporting framing to transfer system and applied loads to the supporting substrates. Supporting framing shall consist of aluminum, in continuous extrusions, box beams, connections, fasteners and the like to develop the required capacities. Panel layout shall minimize the number of joints in completed construction.

1.5.4 Sandwich-Panel Fire-Test-Response Characteristics:

Provide fiberglass sandwich panels identical to those tested for the following fire-test-response characteristics per test method indicated below by an independent testing and inspecting agency acceptable to authorities having jurisdiction.

1. Plastic Self-Ignition Temperature: 650 deg F or more when tested per ASTM D1929.
2. Interior-Face Burning Extent: 1 inch or less per ASTM D635.
3. Interior-Face Surface Burning: Flame-spread and smoke-developed ratings of not more than 20 and 200, respectively, per ASTM E84.
4. Exterior-Face Surface Burning: Class A, burning brand only, per ASTM E108.

1.5.5 Preinstallation Conference:

Conduct conference at Project site. Review methods and procedures related to translucent wall and skylights including, but not limited to, the following:

1. Inspect and discuss condition of preparatory work performed by other trades.
2. Review structural load limitations.
3. Review translucent wall and skylight curb structural requirements.
4. Review and finalize construction schedule and verify availability of materials, Installer's personnel, equipment, and facilities needed to avoid delays.
5. Review required testing procedures.
6. Review weather and forecasted weather conditions and procedures for unfavorable conditions.
7. Review protection of adjacent roof areas.

1.6 PROJECT CONDITIONS

Field Measurements: Where translucent wall and skylights are indicated to fit to other construction, verify dimensions of other construction by field measurements before fabrication and indicate measurements on Shop Drawings. Coordinate fabrication schedule with construction progress to avoid delaying the Work.

1. Established Dimensions: Where field measurements cannot be made without delaying the Work, establish dimensions and proceed with fabricating translucent wall and skylights without field measurements. Coordinate construction to ensure that actual dimensions correspond to established dimensions.

1.7 WARRANTY

1.7.1 General Warranty:

Special warranty specified in this Article shall not deprive Owner of other rights Owner may have under other provisions of the Contract Documents and shall be in addition to, and run concurrent with, other warranties made by Contractor under requirements of the Contract Documents.

1.7.2 Special Warranty:

Written warranty, executed by manufacturer agreeing to repair or replace components of translucent wall and skylights that fail in materials or workmanship within specified warranty period. Failures include, but are not limited to, the following:

1. Structural failures.
2. Deterioration of metals, metal finishes, fiberglass sandwich panels, and other materials beyond normal weathering.
3. Water leakage, defined as uncontrolled water appearing on normally exposed interior surfaces of translucent wall and skylights from sources other than condensation. Water controlled by flashing and gutters and drained back to the exterior and that cannot damage adjacent materials or finishes is not water leakage.
4. Warranty Period: Five years from date of Substantial Completion.

1.7.3 Finish System, Warranty:

Written warranty, executed by manufacturer agreeing to repair or refinish components of translucent wall and skylights that fail in materials or workmanship within specified warranty period. Failures include, but are not limited to, the following:

1. Fading, cracking, hazing, or peeling.
2. Finish System Warranty Period: Ten years from date of Substantial Completion.

PART 2 PRODUCTS

2.1 MATERIALS

2.1.1 Aluminum:

Alloy and temper recommended by manufacturer for use and finish indicated, and as follows:

1. Extrusions: ASTM B221.
2. Sheet and Plate: ASTM B209.
3. Bars, Rods, and Wire: ASTM B211.

Aluminum Superstructure: Provide pre-fabricated aluminum superstructure, fabricated from aluminum alloy 6005-T5 or 6061-T6 box beams. Ferrous metals shall not be allowed. All exposed aluminum shall be finished as specified herein below.

Aluminum Grid Core: The aluminum I-beams shall be 6063-T or 6005-T5 with provisions for direct mechanical interlocking of muntin-mullion and perimeter to prevent high and low intersections which do not allow full bonding surface to contact with face material. Ferrous metals are not allowed. Width of I-beam shall be no less than 7/16 inch. Aluminum I-beam grid shall be machined to tolerances of not greater than +.002 inch.

Perimeter Closure System: Closure system shall be extruded 6063-T6 and 6063-T5 aluminum clamp-tite screw type.

2.1.2 Battens, Brackets, and Reinforcements:

Manufacturer's standard high-strength aluminum units.

2.1.3 Exposed Flashing and Closures:

Aluminum sheet, minimum 0.060 inch thick.

2.1.4 Fasteners and Accessories:

Manufacturer's standard corrosion-resistant, nonstaining, nonbleeding fasteners and accessories; compatible with adjacent materials.

1. Movement Joints: Provide slip-joint linings, spacers, and sleeves of material and type recommended by manufacturer.
2. Aluminum-Retaining-Cap or Batten Fasteners: ASTM A193, Series 300 stainless-steel screws; type as recommended by manufacturer.
3. Connections to Supporting Structure: ASTM A193, stainless-steel screws; type as recommended by manufacturer.
4. Anchor Bolts: ASTM A307, Grade A, zinc-coated steel anchor bolts.
5. Concrete or Masonry Inserts: Zinc-coated cast-iron, malleable-iron, or steel inserts; hot-dip galvanized according to ASTM A123.
6. Shims: Nonstaining, nonferrous shims compatible with adjacent materials, for intalling and aligning translucent wall and skylight.

2.1.5 Translucent wall and Skylight-System Gaskets and Joint Fillers:

Manufacturer's standard permanent gaskets and joint fillers for sliding, compression, and nonmoving joints.

2.1.6 Translucent wall and skylight-System Sealants:

Compatible with components with which sealants come in contact and recommended by translucent wall and skylight and sealant manufacturers for this use.

2.1.7 Bituminous Paint:

Cold-applied asphalt mastic paint complying with SSPC-Paint 12, except containing no asbestos, and formulated for 30-mil thickness per coat.

2.1.8 Thermal Insulation:

Provide batt insulation conforming to requirements specified in Section 07210, BUILDING INSULATION.

2.1.9 Translucent Fiberglass Sandwich Panels:

2-3/4 inches thick with uniformly colored, translucent, fiberglass-reinforced-polymer face sheets permanently attached to a grid core using adhesive.

1. Erosion Protection: Manufacturer's standard Polyvinyl-fluoride film between 1.5 mils and 2.0 mils thick.

2. U-Value: Not more than 0.29 Btu/sq. ft. x h x deg F per ASTM C236.

3. Grid Core: Aluminum I-beams complying with ASTM B221 and in alloy and temper recommended by manufacturer.

4. Grid Pattern: Inline rectangle (shoji), nominal 12 by 24 inches, symmetrical about the horizontal centerline of each panel.

5. Adhesive: Waterproof, heat-and-pressure-resin type with tensile bond strength of 750 psi when tested according to ASTM C297 after aging according to ASTM D1037, and shear bond strength of 700 psi when tested according to ASTM D1002 after aging according to ASTM D1183.

6. Impact Resistance: No failure at impact of 60 ft. x lbf according to free-falling ball impact test using a 3-1/2-inch diameter, 6.3-lb ball.

7. Color Stability: Not more than 3.0 units Delta E after 60 months when tested according to ASTM D2244.

8. Interior Face Color: Interior face sheets shall be 0.045 inches thick, and White in color

9. Exterior Face Color: Exterior face sheets shall be smooth texture, 0.070 inches thick, and Crystal in color

10. Light Transmission: 30%.

11. Roof Solar Heat Gain Coefficient: 27

2.1.10 Transparent Fiberglass Sandwich Panels:

2-3/4 inches thick with uniformly transparent 0.125 in. thick acrylic transparent sheets attached to grid core using adhesive, with a light transmittance of 81%.

1. Erosion Protection: Manufacturer's standard Polyvinyl-fluoride film between 1.5 mils and 2.0 mils thick.

2. U-Value: Not more than 0.53 Btu/sq. ft. x h x deg F per ASTM C236.

3. Grid Core: Aluminum I-beams complying with ASTM B221 and in alloy and temper recommended by manufacturer.

4. Grid Pattern: Inline rectangle (shoji), equally spaced across panel dimensions and to align with supporting framing at not more than 12 in. in width and not more than 24 in. in length.

5. Adhesive: Waterproof, heat-and-pressure-resin type with tensile bond strength of 750 psi when tested according to ASTM C297 after aging according to ASTM D1037, and shear bond strength of 700 psi when tested according to ASTM D1002 after aging according to ASTM D1183.

6. Interior Face Color: Interior face sheets shall be 0.125 inches thick, and Clear in color

7. Exterior Face Color: Exterior face sheets shall be smooth texture, 0.125 inches thick, and Clear in color

2.2 FABRICATION

2.2.1 Aluminum Components:

As follows:

1. Fabricate components that, when assembled, will have accurately fitted joints with ends coped, mitered, or butted to produce hairline joints free of burrs and distortion.
2. Fabricate components to drain water passing joints and to drain condensation and moisture occurring or migrating within translucent wall and skylight system to the exterior.
3. Fabricate components to accommodate expansion, contraction, and field adjustment and to provide for minimum clearance and shimming at translucent wall and skylight perimeter.
4. Form shapes with sharp profiles, straight and free of defects or deformations, before finishing.
5. Fit and assemble components to greatest extent practicable before finishing.

6. Reinforce members as required to retain fastener threads.
7. Where fasteners are exposed to view from interior, countersink fastener heads and finish them to match framing.
8. Before shipping, shop assemble, mark, and disassemble components that cannot be permanently shop assembled.

2.2.2 Flashing Fabrication:

Fabricate flashing with weatherproof expansion joints and corners.

2.2.3 Framing:

Prepare framing to receive anchor and connection devices and fasteners.

2.2.4 Fiberglass-Sandwich-Panel Fabrication:

As follows:

1. Laminate face sheets to grid core under a controlled heat-and-pressure process with straight adhesive bonding lines that cover the width of core members and that have sharp edges.
2. White spots indicating lack of bond at intersections of grid core members are limited in number to 4 for every 40 sq. ft. of panel and limited in diameter to 3/64 inch.
3. Fabricate with grid pattern that is symmetrical about centerlines of each panel.
4. Fabricate panel to allow condensation within the panel to escape.
5. Reinforce panel corners.

2.3 FINISH

Comply with NAAMM "Metal Finishes Manual" for recommendations relative to applying and designating finishes.

Finish designations prefixed by AA conform to the system established by the Aluminum Association for designating aluminum finishes.

Finish aluminum components of the translucent wall and skylight system to match other aluminum components on the project, including curtain wall framing; aluminum windows; and exterior metal wall panels.

High-Performance Organic Coating Finish: AA-C12C42R1x (Chemical Finish: cleaned with inhibited chemicals; Chemical Finish: acid chromate-fluoride-phosphate conversion coating; Organic Coating: as specified below). Prepare, pretreat, and apply coating to exposed metal surfaces to comply with coating and resin manufacturer's instructions.

1. Fluoropolymer 2-Coat Coating System: Provide 2-coat, thermocured, solid color finish system composed of specially formulated inhibitive primer, and fluoropolymer color coat, with color coat containing not less than 70 percent polyvinylidene fluoride resin by weight; complying with AAMA 605.2. Coating shall be equal to PPG Duranar.

2. Color and Gloss: As indicated in Section 09915, COLOR SCHEDULE.

2.3.1 Salt Spray Test

A sample of the sheets shall withstand a salt spray test for a minimum of 3000 hours in accordance with ASTM B 117, including the scribe requirement in the test. Immediately upon removal of the panel from the test, the coating shall receive a rating of not less than 8F, few no. 8 blisters, as determined by ASTM D 714.

2.3.2 Formability Test

When subjected to testing in accordance with ASTM D 522 Method B, 1/8 inch diameter mandrel, the coating film shall show no evidence of fracturing to the naked eye.

2.3.3 Accelerated Weathering, Chalking Resistance and Color Change

A sample of the sheets shall be tested in accordance with ASTM D 4587. The coating shall withstand the weathering test without cracking, peeling, blistering, loss of adhesion of the protective coating, or corrosion of the base metal. Protective coating that can be readily removed from the base metal with tape in accordance with ASTM D 3359, Test Method B, shall be considered as an area indicating loss of adhesion. Following the accelerated weathering test, the coating shall have a chalk rating not less than No. 8 in accordance with ASTM D 4214 test procedures, and the color change shall not exceed 5 CIE or Hunter Lab color difference (delta E) units in accordance with ASTM D 2244. For sheets required to have a low gloss finish, the chalk rating shall be not less than No. 6 and the color difference shall be not greater than 7 units.

2.3.4 Humidity Test

When subjected to a humidity cabinet test in accordance with ASTM D 2247 for 3000 hours, a scored panel shall show no signs of blistering, cracking, creepage or corrosion.

2.3.5 Impact Resistance

Factory-painted sheet shall withstand direct and reverse impact in accordance with ASTM D 2794 0.500 inch diameter hemispherical head indenter, equal to 1.5 times the metal thickness in mils, expressed in inch-pounds, with no loss of adhesion.

2.3.6 Abrasion Resistance Test

When subjected to the falling sand test in accordance with ASTM D 968, Method A, the coating system shall withstand a minimum of 170 - 220 liters of sand before the appearance of the base metal. The term "appearance of base metal" refers to the metallic coating on aluminum base metal.

PART 3 EXECUTION

3.1 EXAMINATION

A. Examine substrates and conditions, with Installer present, for compliance with requirements for installation tolerances and other conditions affecting performance.

1. Proceed with installation only after unsatisfactory conditions have been corrected.

3.2 PREPARATION

Carefully review substrates to which translucent wall and skylight systems are to be applied. Provide all anchor bolts, inserts, fasteners, bearing pads and the like to properly secure systems to substrate. At concrete and masonry provide items to be embedded into concrete or masonry construction to permit proper placement and integration into the work. At structural steel provide connection details, bolt hole layouts, and the like to permit proper fabrication of structural steel components. Coordinate for proper accommodation of fabrication and erection tolerances of substrates.

Field measure existing construction before fabrication and adjust nominal unit dimensions indicated to fit existing conditions. Dimensions indicated are approximate only. Any variations of up to 12 in. in either direction shall be provided without change in the Contract Price. At existing construction, provide anchors, clips, fasteners, flashings and the like to properly complete the work.

Provide separation between metals to eliminate galvanic corrosion including the following:

1. Where aluminum will contact dissimilar metals, protect against galvanic action by painting contact surfaces with primer or by applying sealant or tape recommended by manufacturer for this purpose.
2. Where aluminum will contact concrete or masonry, protect against corrosion by painting contact surfaces with bituminous paint.
3. Where aluminum will contact pressure-treated wood, separate dissimilar materials by methods recommended by manufacturer.

3.3 INSTALLATION

3.3.1 General:

Comply with manufacturer's written instructions for protecting, handling, and installing translucent wall and skylight components.

1. Fit aluminum component joints to produce hairline joints free of burrs and distortion.
2. Rigidly secure nonmovement joints.
3. Accommodate thermal and mechanical movements.
4. Install framing components to drain water passing joints and to drain condensation and moisture occurring or migrating within translucent wall and skylight system to the exterior.
5. Coordinate installation of insulation and flashings at translucent

wall and skylight perimeters to maintain continuity of thermal and water barriers.

6. Set continuous flashings in a full sealant bed, unless otherwise indicated. Comply with requirements in Section 07900, JOINT SEALING.

3.3.2 Erection Tolerances:

Install translucent wall and skylight components true in plane, accurately aligned, and without warp or rack. Adjust to comply with the following tolerances:

1. Variation from Plane: Limit variation from plane or location shown to 1/8 inch in 10 feet; 1/4 inch over total length.
2. Alignment: Where surfaces abut in line and at corners and where surfaces are separated by less than 3 inches, limit offset from true alignment to less than 1/32 inch; otherwise, limit offset from true alignment to 1/8 inch.

3.3.3 Sealants:

Install sealants according to sealant manufacturer's written instructions to provide weatherproof joints. Install joint fillers behind sealant as recommended by sealant manufacturer.

3.4 FIELD QUALITY CONTROL

3.4.1 Testing Agency:

Engage a qualified independent testing and inspecting agency to perform field quality-control tests and to prepare test reports.

3.4.2 Water-Spray Test:

Test translucent wall and skylights according to procedures in AAMA 501.2.

Repair or replace Work that does not pass testing or that is damaged by testing; and retest Work.

3.5 CLEANING

Clean translucent wall and skylights inside and outside, after installation and just prior to final acceptance, according to manufacturer's written recommendations.

1. Remove temporary protective coverings and strippable coatings from factory-finished metal surfaces and fiberglass sandwich panels. Remove labels and markings from all components.

-- End of Section --

SECTION 08960

ALUMINUM FRAMED CANOPYS

PART 1 GENERAL

1.1 REFERENCES

The publications listed below form a part of this specification to the extent referenced. The publications are referred to in the text by basic designation only.

ARCHITECTURAL ALUMINUM MANUFACTURER'S ASSOCIATION (AAMA)

AAMA 501.3	Field Check of Water Penetration Through Installed Windows, Curtain Walls, and Doors by Uniform Static Air Pressure
AAMA 1600	Voluntary Specifications for Skylights

AMERICAN SOCIETY FOR TESTING AND MATERIALS (ASTM)

ASTM B 221	Aluminum Alloy Extruded Bars, Rods, Wire, Shapes, and Tubes
ASTM E 330	Structural Test Method of Exterior Windows, Curtain Walls, and Doors by Uniform Static Air Pressure Difference
ASTM E 331	Test Method for Water Penetration of Exterior Windows, Curtain Walls, and Doors by Uniform Static Air Pressure Differenc

1.2 SUBMITTALS

Government approval is required for submittals with a "GA" designation; submittals having an "FIO" designation are for information only. The following shall be submitted in accordance with Section 01330 SUBMITTAL PROCEDURES:

SD-04 Drawings

Canopy Shop Drawings; GA.

Provide large scale shop drawings for fabrication, installation and erection of all parts of the work. Provide plans, elevations, and details of anchorages, connections and accessory items. Provide installation templates for work installed by others. Show all interfaces and relationships to work of other trades. Provide shop drawings stamped and signed by a professional engineer, licensed to practice in the State of New

York.

SD-13 Certificates

Calculations; FIO.

Provide professionally prepared calculations and certifications of the performance of the work. Provide calculations and certifications stamped and sealed by a professional engineer registered in the jurisdiction in which the Project is being built. Show how design load requirements and other performance criteria have been satisfied.

SD-14 Samples

Initial Selection Samples; GA.

Submit samples showing complete range of colors, textures, and finishes available for each material used.

Verification Samples; FIO.

Submit representative samples of each material that is to be exposed in the completed work. Show full color ranges and finish variations expected. Provide samples having minimum size of 144 sq. in.

1.3 WORK INCLUDED

Provide glazed aluminum-framed canopy work as indicated on Drawings and as specified. Include, but do not limit to:

1. Design and engineering of canopy system.

2. Factory finishing of exposed aluminum members.

3. Flashing and counterflashing of canopy system.

4. Components and accessories required to complete framing for the canopy system.

5. Glass and glazing for canopy systems.

1.4 RELATED WORK

Examine Contract Documents for requirements that affect work of this Section. Other Specification Sections that directly relate to work of this Section include, but are not limited to:

1. Section 05120, STRUCTURAL STEEL; Structural steel framing to receive canopy.

2. Section 08810, GLASS AND GLAZING; Glass and glazing requirements for canopies.

1.5 QUALITY ASSURANCE

Source: For each material type required for the work of this section, provide primary materials which are the product of one manufacturer. Provide secondary or accessory materials which are acceptable to the manufacturers of the primary materials.

Installer: A firm with a minimum of five years experience in type of work required by this section and which is acceptable to the manufacturers of the primary materials.

1.6 TESTS AND PERFORMANCE REQUIREMENTS

Manufacturer's Standard Tests: Provide manufacturer's standard test data showing compliance with specified requirements. Provide specified tests if manufacturer's standard units have been modified, or when custom units are used.

1.6.1 Water Leakage Test:

Test canopy unit in accordance with ASTM E 331, with four test cycles, each cycle consisting of five minutes with pressure applied, and one minute of pressure released, during which time the water spray will be continuously applied.

1. Test Pressure: 4 pounds per square foot.

2. Performance: No leakage as defined in the test method at the specified test pressure.

1.6.2 Uniform Load Structural Test:

Test canopy unit in accordance with ASTM E 330 at the following Test Pressures. Apply the high pressure load first on the positive (exterior) side and then on the negative (interior) side. At the conclusion of the test there shall be no glass breakage and no permanent damage to fasteners or any other components in the assembly.

1. Performance Class: IV, as shown in Table 8.1.3 of AAMA 1600.

2. Test Pressure: 60 psf positive, 40 psf negative.

3. Test Procedure: Procedure A as specified in ASTM E 330.

4. Performance: Deflection in each member measured at locations of greatest deflection shall not exceed L/175 at the specified Test Pressure.

5. Permanent Deformation in Any Member: Not to exceed 0.4% of member span.

1.6.3 Thermal Movement:

Provide canopy system that allows for expansion and contraction of members throughout an ambient temperature range of 120 degrees F.

J. Field Leakage Test:

The Government reserves the right to employ an independent testing agency to perform in-place field tests for water leakage. Complete first canopy unit and surrounding construction at earliest possible date in order that any problems or failures can be identified before majority of canopy work has been installed. Field test will include a prolonged water spray test, similar to AAMA 501.3. Any uncontrolled water leakage will be considered a failure. Contractor shall pay for all remedial work and all retesting due to failures.

1.7 PROJECT CONDITIONS

Weather: Perform work of this Section only when existing or forecasted weather conditions are within the limits established by manufacturers of the materials and products used.

Substrates: Proceed with work only when substrate construction and penetration work is complete.

1.8 DELIVERY, STORAGE AND HANDLING

Deliver materials and products in unopened, factory labeled packages. Store and handle in strict compliance with manufacturer's instructions and recommendations. Store under cover and protect from weather damage.

B. Sequence deliveries to avoid delays, but minimize on-site storage.

1.9 WARRANTIES

Provide a written warranty, signed by the manufacturer, installer, and Contractor, agreeing to repair or replace work which exhibits defects in materials or workmanship. "Defects" is defined to include, but not limited to, leakage of water, abnormal aging or deterioration, abnormal deterioration or fading of finishes, and failure to perform as required. Include requirement for removal and replacement of covering and connected adjacent work.

1. Warranty period: Ten years from date of Substantial Completion.

PART 2 PRODUCTS

2.1 ALUMINUM-FRAMED CANOPY SYSTEM

Acceptable Manufacturers: Provide products of one of the following manufacturers that meet or exceed specified requirements:

1. Bohem Skylights, Inc.
2. EPI Architectural Systems, Inc.
3. Fisher Skylights, Inc.
4. Super Sky Products, Inc.
5. Wasco Products, Inc.

2.2 MATERIALS

Canopy framing sections shall be extruded aluminum conforming to ASTM B 221, 6063-T5 alloy and temper. Brake-metal work shall be sheet aluminum. Alloys and tempers of aluminum shall be as recommended by manufacturer for strength, corrosion resistance, and specified finish, but of not less than 27,000 psi ultimate tensile strength and not less than 0.109 in. (framing members) and 0.094 in. (interior and exterior caps) thicknesses at any location for extrusions and not less than 0.062 in. thick for sheet metal.

Sections shall present straight, sharply defined lines and arrises, and shall be free from defects impairing strength, durability, or appearance.

Glazing Gaskets: Shall be extruded neoprene glazing with Shore A Hardness of 45 to 55 durometer.

Fasteners:

1. Fasteners used for attachment of glazing caps shall by Type 302 or 304 (18-8) stainless steel with neoprene washers.

2. Fasteners used for attachment of aluminum extrusions to connecting and supporting members shall be 2024-T4 aluminum alloy or Type 302 or 304 (18-8) stainless steel.

3. Fasteners shall be finished to match finish of surrounding aluminum.

2.3 GLASS

Provide glass and glazing as specified in Section 08810, GLASS AND GLAZING.

2.4 SEALANTS

Provide sealants and fillers complying with requirements of Section 07900, JOINT SEALING.

2.5 FABRICATION

Insofar as practicable, the work shall be fitted and assembled in the shop. Work that cannot be permanently shop-assembled shall be assembled, marked, and disassembled before shipment to ensure proper assembly in the field. Components shall be designed and installed with provisions to allow relief of all stresses caused by thermal and building movement, without excessive stresses in, or deformation of, any of the installed components or failure of the weathertight integrity of the installations.

Rafter bars shall be extruded aluminum, size(s) and shape(s) as indicated on the approved Submittals. Rafter bars shall be fitted with neoprene glazing strips and shall have integral condensation gutters formed into the extrusions.

Caps shall be extruded aluminum, attached with specified, neoprene-gasketed fasteners located 12 in. o.c., maximum.

Clips for the attachment of the rafter bars shall be aluminum and shall be shop riveted, bolted, or welded to the rafter bars.

Welding shall be by heliarc process. Exposed welds shall be ground smooth and finished to a minimum of 100 grit finish to closely match surrounding aluminum surfaces.

Glass and Glazing: Comply with applicable requirements of Section 08810, GLASS AND GLAZING.

Weepholes shall be located in the aluminum curb bars to provide positive drainage of condensation to the exterior, and shall be baffled to prevent water infiltration.

2.6 ALUMINUM BRAKE-METAL

Fabricate and install aluminum "brake-metal" flashing work at canopy installations as detailed and as necessary to complete the work, including all sheet metal closures, end closures, corner closures, flashings, fillers, etc., as required.

Note: Standard extrusions are preferred to formed sheet metal work and, if available, shall be used.

Form sheet work components straight, true, and free of "oil-canning". Protect surfaces from marring.

2.08 ALUMINUM FINISH

Comply with NAAMM "Metal Finishes Manual" for recommendations relative to applying and designating finishes.

Finish designations prefixed by AA conform to the system established by the Aluminum Association for designating aluminum finishes.

Finish aluminum curtain wall components to match other aluminum components on the project, including aluminum louvers; aluminum windows; and exterior metal wall panels.

High-Performance Organic Coating Finish: AA-C12C42R1x (Chemical Finish: cleaned with inhibited chemicals; Chemical Finish: acid chromate-fluoride-phosphate conversion coating; Organic Coating: as specified below). Prepare, pretreat, and apply coating to exposed metal surfaces to comply with coating and resin manufacturer's instructions.

1. Fluoropolymer 3-Coat Coating System: Provide 3-coat, thermocured, metallic Finnish system composed of specially formulated inhibitive primer, fluoropolymer color coat, and clear fluoropolymer topcoat, with both color coat and clear topcoat containing not less than 70 percent polyvinylidene fluoride resin by weight; complying with AAMA 605.2. Coating shall be equal to PPG Duranar XL.

2. Color and Gloss: As indicated in Section 09915, COLOR SCHEDULE.

2.7 3 EXECUTION

3.1 INSTALLATION

Aluminum-framed canopy work shall be erected in strict accordance with the approved shop drawings and the manufacturer's printed installation instructions by the canopy manufacturer utilizing his own fully experienced, adequately supervised, erection crews. Installation shall be complete in all respects, including all framing and all related aluminum closures, flashings, fillers, fastenings, anchors, sealing, glazing, insulation, etc., required for a complete weathertight installation, including sealing between the canopy system components and the surrounding construction. Provide positive fastening and anchorage of all components.

Contact between aluminum and dissimilar materials shall be protected with coating of bituminous mastic or application of non-absorptive, dielectric tape for prevention of electrolytic action and corrosion. Do not use bituminous mastic where it might contaminate a joint or surface to receive sealant.

Install sheet aluminum closures, fillers, flashings, and similar "brake-metal" work as indicated and/or required to assure positive weather-tight conditions at all perimeters, edges, and changes of plane.

3.2 SEALING

Do all metal-to-metal sealing required to assure thoroughly weathertight installations throughout, as recommended by sealant manufacturer and complying with applicable requirements specified under Section 07900, JOINT SEALING.

3.3 GLAZING

Install glass and glazing in compliance with all applicable requirements specified in Section 08810, GLASS AND GLAZING.

3.4 PROTECTION AND CLEANING OF ALUMINUM

Protect finished metal surfaces from damage during fabrication, shipping, storage, and erection, and from then until acceptance by Government.

Clean all metal and glass surfaces promptly after installation. Remove excess sealant, dirt, and other substances.

3.5 PROTECTION AND CLEANING OF GLASS

Replace all glass which is broken, cracked or chipped prior to time of final acceptance of Project by Government.

Clean glass surfaces promptly after installation, exercising care to avoid damage to same.

-- End of Section --

SECTION 09000

FINISH SCHEDULE

PART 1 GENERAL

1.1 WORK INCLUDED

Provide all finishes to Rooms and Spaces as indicated on Drawings and as Scheduled herein.

Refer to Specifications Sections in Division 9 - FINISHES for material and installation requirements.

Refer to the following Room Finish Schedules:

1. Room Finish Schedule: Refer to Finish Schedule, a copy of which follows this Section.

1.2 RELATED WORK

Examine Contract Documents for requirements that affect work of this Section. Other Specification Sections that directly relate to work of this Section include, but are not limited to:

1. Section 03300, CAST-IN-PLACE STRUCTURAL CONCRETE.
2. Section 04200, MASONRY.
3. Section 06200, FINISH CARPENTRY.
4. Section 06400, ARCHITECTURAL WOODWORK.
5. Section 07240, EXTERIOR AND INTERIOR FINISH SYSTEM
6. Section 09200, LATHING AND PLASTERING.
7. Section 09250, GYPSUM WALLBOARD.
8. Section 09310, CERAMIC TILE.
9. Section 09380, SWIMMING POOL TILE.
10. Section 09445, RESINOUS TERRAZZO FLOORING.
11. Section 09446, PRECAST TERRAZZO STAIR TREADS/RISERS.
12. Section 09510, ACOUSTICAL CEILINGS.
13. Section 09620, RESILIENT ATHLETIC FLOORING.
14. Section 09640, WOOD STRIP FLOORING.
15. Section 09650, RESILIENT FLOORING.
16. Section 09670, INDUSTRIAL FLOORING.
17. Section 09685, CARPET.
18. Section 09840, ACOUSTICAL WALL TREATMENT.
19. Section 09900, PAINTING, GENERAL.
20. Section 09915, COLOR SCHEDULE.

1.3 ROOM FINISH SCHEDULES

The ROOM FINISH SCHEDULE immediately follows this Section.

PART 2 PRODUCTS

NOT USED.

PART 3 EXECUTION

NOT USED

-- End of Section --

NUMBER	ROOM		FLOOR	FLOOR COLOR	BASE	BASE COLOR	WALL SUBSTRATE	WALL FINISH	WALL COLOR	CEILING	CEILINGHT	REMARKS: SEE GENERAL NOTES AND REMARKS NOTES AND END OF SCHEDULE
Ref Drawing: A1.0YS												
Y001		CORRIDOR	99b1	NA	96.5b	VB-1	42b/92a5	99b/MCP*	VARIES*	95b/92a2	VARIES	*See A2.36 & A2.37 & Note 38
Y002		STAIR #6	99b1	NA	96.5b	VB-1	42b/92a5	99b*/MCP	*/**	95b/92a2	VARIES	See A6.18, *Note 2, **Note 38
Y003	DOMESTIC	HOT WATER	99b1	NA	96.5b	VB-1	33/42b	99b	PT-1	None	NA	*See Note N
Y004		MEN'S	93a*	MULTI	93b7	CT-2	42b/92a5	99b/93b*	PT-1/*	95b	8'-0"	See A5.01YS *See Note 5
Y005		WOMEN'S	93a*	MULTI	93b7	CT-2	42b/92a5	99b/93b*	PT-1/*	95b	8'-0"	See A5.01YS *See Note 5
Y006		VESTIBULE	99b1	NA	96.5b	VB-1	42b	99b	PT-1	95b	8'-0"	
Y008	EMERG. ELECT. &	ELECTRICAL	99b1	NA	96.5b	VB-1	42b	99b	PT-1	None	NA	*See Note N
Y009		JANITOR	99b1	NA	96.5b	VB-1	42b	99b	PT-1	None	NA	*See Note N
Y010	DPE	EQUIPMENT	99b1	NA	96.5b	VB-1	33/42b	99b	PT-1	95a	8'-0"	See A5.02YS
Y012		JANITOR	99b1	NA	96.5b	VB-1	33/42b	99b	PT-1	None	NA	*See Note N
Y013		OFFICE	96.8e	CPT-5	96.5b	VB-2	42b	99b	PT-1	95a	8'-0"	
Y014		KITCHEN	96.5a	VCT-1	96.5b	VB-1	42b/92a1	99b/64c,d*	PT-1	95a	8'-0"	See A5.02YS *Note 35
Y015		CORRIDOR	99b1	NA	96.5b	VB-1	42b	99b/MCP*	VARIES*	95b	8'-0"	See A2.36, A2.37, A2.38, *Note 38
Y020	CS	EQUIPMENT	99b1	NA	96.5B	VB-1	33/42b	99b	PT-1	95a	8'-0"	
Y023		OFFICE	96.8e	CPT-5	96.5b	VB-2	42b/92a1	99b/64c,d*	PT-1	95a	8'-0"	See A5.03YS *Note 35
Y024		SEWING	96.8e	CPT-5	96.5b	VB-2	42b	99b/64c,d*	PT-1	95a	8'-0"	See A5.03YS *Note 35
Y026		LAUNDRY	99b1	NA	96.5b	VB-1	42b	99b/64c,d*	PT-1	95a	8'-0"	See A5.03YS *Note 35
Y027		DRYER	99b1	NA	96.5b	VB-1	42b	99b	PT-1	None	NA	*See Note N
Y028	SUMP	PIT	99b1	NA	96.5b	VB-1	33/42b	99b	PT-1	None	NA	*See Note N
Y030		TEL/DATA #2	99b1	NA	96.5b	VB-1	42b	99b*	PT-1*	None	NA	*See Note 1, **See Note N
Ref Drawings: A1.1YS												
Y101		CORRIDOR (OP)	33.6	MULTI	42n/96.5b	CB/VB-1	42c/92a5	GF/99b*	VARIES*	95b/92a2	VARIES	See A2.36, A2.37, *Note 38
Y102		STAIR #6	33.6	NA	96.5b	VB-1	42b/92a5	99b*/MCP	*/**	95b/92a2	VARIES	See A6.18, *Note 2, **Note 38
Y103		ENTRY	126c/33.6	MULTI	42n	CB-1	42c	GF/99b*	VARIES*	95b	11'-4"	
Y104	SOUTH	LOBBY (OP)	33.6	MULTI	42n/96.5b	CB/VB-1	42c/92a5	GF/99b*	VARIES*	95b/92a2	VARIES	*Note 38
Y108	EMERG. ELECT. &	ELECTRICAL	99b1	NA	96.5b	VB-1	42b/92a1	99b	PT-1	None	NA	*See Note N
Y109		JANITOR	99b1	NA	96.5b	VB-1	42b/92a1	99b	PT-1	None	NA	*See Note N

NUMBER	ROOM		FLOOR	FLOOR COLOR	BASE	BASE COLOR	WALL SUBSTRATE	WALL FINISH	WALL COLOR	CEILING	CEILINGHT	REMARKS: SEE GENERAL NOTES AND REMARKS NOTES AND END OF SCHEDULE
Y110	SERVICE	CORRIDOR	99b1	NA	96.5b	VB-1	42b	99b	PT-1	95a	10'-0"	
Y111	EMERGENCY	GENERATOR	99b1	NA	96.5b	VB-1	92a1	99b	PT-1	None	NA	*See Note N
Y112	EMERGENCY	ELECTRICAL	99b1	NA	96.5b	VB-1	92a1	99b	PT-1	None	NA	*See Note N
Y113		ELECTRICAL	99b1	NA	96.5b	VB-1	92a1	99b	PT-1	None	NA	*See Note N
Y114	DPE	CORRIDOR	96.5c*	MULTI*	96.5b	VB-1	92a1	99b	PT-1	95b	10'-0"	*See Note 30
Y115	DPE	REHAB	96.5c*	MULTI*	96.5b	VB-1	42b/92a1	99b	PT-1/**	95b	10'-0"	A5.10YS *Note 30 **Note 41
Y116	DPE	TAPING	96.5c*	MULTI*	96.5b	VB-1	42b/92a1	99b	PT-1/**	95b	10'-0"	A5.10YS *Note 30 **Note 41
Y117	TRAINER	OFFICE	96.8g	CPT-7	96.5b	VB-2	92a1	99b	PT-1	95b	10'-0"	See A5.11YS
Y118	UNISEX	TOILET	93a*	MULTI	93b7	CT-2	92a1/92a3	99b/93b*	PT-1/*	95b	9'-0"	*See Note 5
Y119		CORRIDOR	96.5c*	MULTI*	96.5b	VB-1	92a1	99b	PT-1	95b	10'-0"	*Note 30
Y120	PT	REHAB	96.5c*	MULTI*	96.5b	VB-1	92a1	99b	PT-1/**	95b	10'-0"	A5.11YS *Note 30 **Note 41
Y125	TRAINER	OFFICE	96.8g	CPT-7	96.5b	VB-2	92a1	99b	PT-1	95b	10'-0"	See A5.13YS
Y126	PT	STORAGE	96.5c	R-3	96.5b	VB-1	92a1	99b	PT-1	None	NA	*See Note N
Y130		TEL./DATA	99b1	NA	96.5b	VB-1	92a1	99b*	PT-1*	None	NA	*See Note 1, **See Note N
Y131	RECONDITIONING	ROOM	96.2a	R-8	96.5b	VB-1	42b/92a1	99b	PT-1	95b	10'-0"	*Refer A5.13YS
Y132		VESTIBULE	96.2a	R-8	96.5b	VB-1	42b/92a1	99b	PT-1	95b	10'-0"	
Y134	DPE	STORAGE	96.5c	R-3	96.5b	VB-1	92a1	99b	PT-1	None	NA	*See Note N
Y136	SOUND	CLOSET	99b1	NA	96.5b	VB-1	92a1	99b	PT-1	None	NA	*See Note N
Y138	DIA	CORRIDOR	96.5c*	MULTI*	96.5b	VB-1	92a1	99b	PT-1	95b/92a2	10'-0"	*See Note 30
Y140	CHANGE	ROOM	96.5c	MULTI	96.5b	VB-1	92a1*	99b	PT-1	95b	9'-0"	*See A5.12YS
Y142		OFFICE	96.8g	CPT-7	96.5b	VB-2	92a1	99b	PT-1	95b	9'-0"	
Y143	CHANGE	ROOM	96.5c	MULTI	96.5b	VB-1	42b/92a1*	99b	PT-1	95b	9'-0"	*See A5.12YS
Y144		OFFICE	96.8g	CPT-7	96.5b	VB-2	92a1	99b	PT-1	95b	9'-0"	
Y145		STORAGE	99b1	NA	96.5b	VB-1	92a3	93b*	CT-19	99b/PT*	NA	*See Note 20
Y146		OFFICE	96.8g	CPT-7	96.5b	VB-2	92a1	99b	PT-1	95b	9'-0"	
Y147	HYDRO	THERAPY	93a*	CT-1	93b7	CT-1	42b/92b	93b*	CT-19	95c**	10'-0"	*See Dwg's.A5.14YS, A9.15 **See Note N
Y148	DIA	REHAB	96.8h	CPT-8	96.5b	VB-1	42b/92a1	99b	PT-1/*	95b	10'-0"	See A5.14YS *Note 42
Y149	DIA	TAPING	96.5c*	MULTI*	96.5b	VB-1	42b/92a1	99b	PT-1/*	95b	10'-0"	See A5.14YS *Note 42
Y170	POOL	MECHANICAL	93a*	CT-1	93b7	CT-1	42b/92a5	99b	PT-1	99b/PT*	NA	*See Note 20

NUMBER	ROOM		FLOOR	FLOOR COLOR	BASE	BASE COLOR	WALL SUBSTRATE	WALL FINISH	WALL COLOR	CEILING	CEILINGHT	REMARKS: SEE GENERAL NOTES AND REMARKS NOTES AND END OF SCHEDULE
Ref Drawing: A1.2YS												
Y201		CORRIDOR (OP)	33.6	MULTI	42n/96.5b	CB/VB-1	42c/92a5	GF/99b*	VARIES*	95b/92a2	VARIES	See A2.36, A2.37, *Note 38
Y202		STAIR #6	33.6	NA	96.5b	VB-1	42b/92a5	99b*/MCP	*/**	95b/92a2	12'-0"	See A6.18, *Note 2, **Note 38
Y203		TEL./DATA	99b1	NA	96.5b	VB-1	92a1	99b*	PT-1*	None**	NA	*See Note 1, **See Note N
Y204		MEN'S	93a*	MULTI	93b7	CT-2	92a3/92a5	99b/93b*	PT-1/*	95b	9'-0"	*See Note 5
Y205		WOMEN'S	93a*	MULTI	93b7	CT-2	92a3/92a5	99b/93b*	PT-1/*	95b	9'-0"	*See Note 5
Y206		CORRIDOR	99b1	NA	96.5b	VB-1	42b/92a5	99b	PT-1	95a	12'-4"	
Y207	EMER.	ELECTRIC	99b1	NA	96.5b	VB-1	92a1	99b	PT-1	None*	NA	*See Note N
Y208		ELECTRIC	99b1	NA	96.5b	VB-1	92a1	99b	PT-1	None*	NA	*See Note N
Y209		JANITOR	99b1	NA	96.5b	VB-1	92a5	99b	PT-1	None*	NA	*See Note N
Y215		CORRIDOR (OP)	33.6	MULTI	42n/96.5b	CB/VB-1	42c/92a5	GF/99b*	VARIES*	95b/92a2	VARIES	*See Note 38
Y219		STAIR #1	99b1	NA	96.5b	VB-1	92a5	99b*	PT-1*	95b/92a2	VARIES	See A6.11, *Note 2
Y220	HAYES	STORAGE	99b1	NA	96.5b	VB-1	92a5	99b	PT-1	None*	NA	*See Note N
Y221	INTRAMURAL	WRESTLING	99b1/114y	NA	96.5b	VB-1	42b/92a6	99b*	PT-1	95b/92a2	12'-0"	See A5.22YS, Mat Underlay, *Note 12
Y222	WRESTLING	STORAGE	99b1	NA	96.5b	VB-1	92a5	99b	PT-1	None	NA	*See Note N
Y223	INTRAMURAL	WRESTLING	99b1/114y	NA	96.5b	VB-1	42b/92a6	99b*	PT-1	95b/92a2	12'-0"	See A5.22YS, Mat Underlay, *Note 12
Y224	INTRAMURAL	WRESTLING	99b1/114y	NA	96.5b	VB-1	42b/92a6	99b*	PT-1	95b/92a2	11'-0"	See A5.23YS, Mat Underlay, *Note 12
Y225	SOUND	CLOSET	99b1	NA	96.5b	VB-1	92a1	99b	PT-1	None*	NA	*See Note N
Y226	WRESTLING	STORAGE	99b1	NA	96.5b	VB-1	92a5	99b	PT-1	None*	NA	*See Note N
Y227	SOUND	CLOSET	99b1	NA	96.5b	VB-1	92a1	99b	PT-1	None*	NA	*See Note N
Y228		ELECTRIC	99b1	NA	96.5b	VB-1	92a1	99b	PT-1	None*	NA	*See Note N
Y229	EMER.	ELECTRIC	99b1	NA	96.5b	VB-1	92a1	99b	PT-1	None*	NA	*See Note N
Y230		TEL./DATA #2	99b1	NA	96.5b	VB-1	92a1	99b*	PT-1*	None**	NA	*See Note 1, **See Note N
Y231		TEL./DATA #1	99b1	NA	96.5b	VB-1	92a1	99b*	PT-1*	None**	NA	*See Note 1, **See Note N
Y232		STAIR #2	99b1	NA	96.5b	VB-1	92a5	99b*	PT-1*	95b/92a2	12'-0"	See A6.12, *Note 2
Y234	SOUND	CLOSET	99b1	NA	96.5b	VB-1	92a1	99b	PT-1	None*	NA	*See Note N
Ref Drawing: A1.3YS												

NUMBER	ROOM		FLOOR	FLOOR COLOR	BASE	BASE COLOR	WALL SUBSTRATE	WALL FINISH	WALL COLOR	CEILING	CEILINGHT	REMARKS: SEE GENERAL NOTES AND REMARKS NOTES AND END OF SCHEDULE
Y301		CORRIDOR	99b1	NA	96.5b	VB-1	42b/92a5	99b/MCP	VARIES*	95b/92a2	VARIES	See A2.36, A2.37, *Note 38
Y302		STAIR #6	99b1	NA	96.5b	VB-1	42b/92a5	99b*/MCP	*/**	95b/92a2	12'-0"	See A6.18, *Note 2, **Note 38
Y304		MEN'S	93a*	MULTI	93a7	CT-2	92a3/92a5	93b/99b*	*/PT-1	95b	9'-0"	See A5.01YS *See Note 5
Y305		WOMEN'S	93a*	MULTI	93a7	CT-2	92a3/92a5	93b/99b*	*/PT-1	95b	9'-0"	See A5.01Ys *See Note 5
Y307	EMER.	ELECTRICAL	99b1	NA	96.5b	VB-1	92a1	99b	PT-1	None*	NA	*See Note N
Y308		ELECTRICAL	99b1	NA	96.5b	VB-1	92a1	99b	PT-1	None*	NA	*See Note N
Y309		JANITOR	99b1	NA	96.5b	VB-1	92a5	99b	PT-1	None*	NA	*See Note N
Y310		CORRIDOR	99b1	NA	96.5b	VB-1	42b	99b	PT-1	95b	12'-4"	
Y315		CORRIDOR	99b1	NA	96.5b	VB-1	42b	99b/MCP	VARIES*	95b	10'-0"	
Y319		STAIR #1	99b1	NA	96.5b	VB-1	42b/92a5	99b*	PT-1*	95b/92a2	12'-4"	See A6.11, *Note 2
Y320	DPE	WEIGHTS	96.2a	R-8	96.2d	R-8	42b/92a6	99b	PT-1	95b	12'-4"	A5.31YS Baselast Underlayment
Y321		STORAGE	99b1	NA	96.5b	VB-1	92a5	99b	PT-1	None*	NA	*See Note N
Y322	MULTI-	PURPOSE #1	96.4c	NA	96.5b1(Vent.)	VCB-1	42b/92a6	99b	PT-1	95b	12'-4"	See A5.32YS
Y323		STORAGE	99b1	NA	96.5b	VB-1	92a5	99b	PT-1	None*	NA	*See Note N
Y324		STORAGE	99b1	NA	96.5b	VB-1	92a5	99b	PT-1	None*	NA	*See Note N
Y325		STORAGE	99b1	NA	96.5b	VB-1	92a5	99b	PT-1	None*	NA	*See Note N
Y326		STORAGE	99b1	NA	96.5b	VB-1	92a5	99b	PT-1	None*	NA	*See Note N
Y327	SOUND	CLOSET	99b1	NA	96.5b	VB-1	92a1	99b	PT-1	None*	NA	*See Note N
Y328		ELECTRIC	99b1	NA	96.5b	VB-1	92a1	99b	PT-1	None*	NA	*See Note N
Y329	EMER.	ELECTRIC	99b1	NA	96.5b	VB-1	92a1	99b	PT-1	None*	NA	*See Note N
Y330		TEL./DATA #2	99b1	NA	96.5b	VB-1	92a1	99b*	PT-1*	None**	NA	*See Note 1, **See Note N
Y331		TEL./DATA #1	99b1	NA	96.5b	VB-1	92a1	99b*	PT-1*	None**	NA	*See Note 1, **See Note N
Y332		STAIR #2	99b1	NA	96.5b	VB-1	92a5	99b*	PT-1*	95b/92a2	12'-0"	See A6.12, *Note 2
Y333	SOUND	CLOSET	99b1	NA	96.5b	VB-1	92a1	99b	PT-1	None*	NA	*See Note N
Y336	PARTITION	STORAGE	99b1	NA	96.5b	VB-1	92a5	99b	PT-1	None*	NA	*See Note N
Ref Drawing: A1.4YS												
Y401		CORRIDOR	99b1	NA	96.5b	VB-1	42b/92a5	99b/MCP	VARIES*	95b/95a2	10'-4"	See A2.36, A2.37, *Note 38
Y402		STAIR #6	99b1	NA	96.5b	VB-1	42b/92a5	99b*/MCP	*/**	95b/92a1	VARIES	See A6.18, *Note 2, **Note 38

NUMBER	ROOM		FLOOR	FLOOR COLOR	BASE	BASE COLOR	WALL SUBSTRATE	WALL FINISH	WALL COLOR	CEILING	CEILINGHT	REMARKS: SEE GENERAL NOTES AND REMARKS NOTES AND END OF SCHEDULE
Y403		VENDING	99b1	NA	96.5b	VB-1	42b	99b/MCP	*	95b	10'-4"	See A2.36, A2.37 *See Note 38
Y404		MEN'S	93a*	MULTI	93b7	CT-2	92a5/92a3	99b/93b*	PT-1/*	95b	9'-0"	See A5.01YS *See Note 5
Y405		WOMEN'S	93a*	MULTI	93b7	CT-2	92a5/92a3	99b/93b*	PT-1/*	95b	9'-0"	See A5.01YS *See Note 5
Y406		VESTIBULE	99b1	NA	96.5b	VB-1	92a5	99b	PT-1	95b	9'-0"	
Y407	EMER.	ELECTRICAL	99b1	NA	96.5b	VB-1	42b/92a1	99b	PT-1	None*	NA	*See Note N
Y408		ELECTRICAL	99b1	NA	96.5b	VB-1	42b/92a1	99b	PT-1	None*	NA	*See Note N
Y409		JANITOR	99b1	NA	96.5b	VB-1	42b/92a5	99b	PT-1	None*	NA	*See Note N
Y410	RACQUETBALL	CORRIDOR	114qq	NA	96.5b1	VCB-1	92a5/Glass	99b/	PT-1	95b	VARIES	
Y411		RACQUETBALL	114qq	*	*	*	*	*	*	*	20'-0"	*Refer Spec Section 11491
Y412		RACQUETBALL	114qq	*	*	*	*	*	*	*	20'-0"	*Refer Spec Section 11491
Y413		RACQUETBALL	114qq	*	*	*	*	*	*	*	20'-0"	*Refer Spec Section 11491
Y415		CORRIDOR	99b1	NA	96.5b	VB-1	42b	99b/MCP	*	95b	9'-0"	
Y419		STAIR #1	99b1	NA	96.5b	VB-1	92a5	99b*	PT-1*	95b/92a2	10'-0"	See A6.11, *Note 2
Y420		RACQUETBALL	114qq	*	*	*	*	*	*	*	20'-0"	*Refer Spec Section 11491
Y421		RACQUETBALL	114qq	*	*	*	*	*	*	*	20'-0"	*Refer Spec Section 11491
Y422		RACQUETBALL	114qq	*	*	*	*	*	*	*	20'-0"	*Refer Spec Section 11491
Y428		ELECTRIC	99b1	NA	96.5b	VB-1	92a1	99b	PT-1	None*	NA	*See Note N
Y429	EMER.	ELECTRIC	99b1	NA	96.5b	VB-1	92a1	99b	PT-1	None*	NA	*See Note N
Y430		TEL./DATA #2	99b1	NA	96.5b	VB-1	92a1	99b*	PT-1*	None**	NA	*See Note 1, **See Note N
Y431		TEL./DATA #1	99b1	NA	96.5b	VB-1	92a1	99b*	PT-1*	None**	NA	*See Note 1, **See Note N
Y432		STAIR #2	99b1	NA	96.5b	VB-1	92a5	99b*	PT-1*	95b/92a2	8'-0"	See A6.12, *Note 2
Y433		CORRIDOR	99b1	NA	96.5b	VB-1	92a5	99b	PT-1	95b	10'-0"	
Y434	BOXING	CORRIDOR	99b1	NA	96.5b	VB-1	92a5	99b	PT-1	95b	10'-0"	
Y435		BOXING	96.2b	R-10	96.5b	VB-1	92a6/92a1*	99b	PT-1	95b	24'-0"	See A5.41YS *See Note 17
Y436		BOXING	96.2b	R-10	96.5b	VB-1	92a6/92a1*	99b	PT-1	95b	24'-0"	See A5.41YS *See Note 17
Y437	SOUND	CLOSET	99b1	NA	96.5b	VB-1	92a1	99b	PT-1	None*	NA	*See Note N
Y438	SOUND	CLOSET	99b1	NA	96.5b	VB-1	92a1	99b	PT-1	None*	NA	*See Note N
Y439		STORAGE	99b1	NA	96.5b	VB-1	92a5	99b	PT-1	None*	NA	*See Note N
Y440	RACQUETBALL	STORAGE	99b1	NA	96.5b	VB-1	92a5	99b	PT-1	None*	NA	*See Note N

NUMBER	ROOM		FLOOR	FLOOR COLOR	BASE	BASE COLOR	WALL SUBSTRATE	WALL FINISH	WALL COLOR	CEILING	CEILINGHT	REMARKS: SEE GENERAL NOTES AND REMARKS NOTES AND END OF SCHEDULE
Y442	GYM	STORAGE	99b1	NA	96.5b	VB-1	92a5	99b	PT-1	None*	NA	*See Note N
Y444		STORAGE	99b1	NA	96.5b	VB-1	92a5	99b	PT-1	None*	NA	*See Note N
Ref Drawing: A1.5YS												
Y519		STAIR #1	99b1	NA	96.5b	VB-1	92a5	99b*	PT-1*	95b/92a2	10'-0"	See A6.11, *Note 2
Y520	BOXING	BALCONY	96.2b	R-10	96.5b	VB-1	92a6	99b	PT-1	95b	10'-0"	See A5.42YS
Y522	BOXING	OFFICE	96.8q	CPT-7	96.5b	VB-2	92a1	99b	PT-1	95b	10'-0"	
Y524	BOXING	BALCONY	96.2b	R-10	96.5b	VB-1	92a6	99b	PT-1	95b	10'-0'	See A5.42YS
Y532		STAIR #2	99b1	NA	96.5b	VB-1	92a5	99b*	PT-1*	95b/92a2	12'-0"	See A6.12, *Note 2
Ref Drawing: A1.6YS												
Y619		STAIR #1	99b1	NA	96.5b	VB-1	92a5	99b*	PT-1*	95b**	9'-0"	See A6.11, *Note 2 **Note 4/A3.00
Y620		VESTIBULE	99b1	NA	96.5b	VB-1	92a1	99b	PT-1	95b*	9'-0"	*See Note 4/A3.00
Y621		ELECTRIC	99b1	NA	96.5b	VB-1	92a1	99b	PT-1	None*	NA	*See Note 4/A3.00
Y622	EXHAUST	PLENUM	See Plan	NA	42b	NA	42b/92c4	None	NA	None*	NA	*See Note 4/A3.00
Y624		PLENUM	See Plan	NA	42b	NA	42b/92c4	None	NA	None*	NA	*See Note 4/A3.00
Y640	SOUTH	MECHANICAL ROOM	96.7a	#631	96.7a	#631	42b/92a1	99b	PT-1	None*	NA	*See Note 4/A3.00
Ref Drawing: A1.0YN												
Y001		CORRIDOR	99b1	NA	96.5b	VB-1	42b/92a5	99b	*	95b/92a2	VARIES	See A2.36, A2.37, A2.38, *Note 38
Y031	POOL	EQUIPMENT	99b1	NA	96.5b	VB-1	42b	99b	PT-1	99b/PT*	NA	*See Notes 20 & 4/A3.00
Y040	INSTRUCTIONAL	POOL	93a*	MULTI*	93b7	CT-2	42b	99b/93b*	*	95c*	20'-4"	See A5.01YN, *Notes 3, 20, & 4/A3.00
Y042	DECK	OFFICE	93a1*	CT-2	93b7	CT-2	42b	99b	PT-1	95c*	8'-0"	See A5.03YN, *Notes 20 & 4/A3.00
Y044	DPE	STORAGE	93a1*	CT-2	93b7	CT-2	42b	99b	PT-1	95c*	8'-0"	See A5.03YN, *Notes 20 & 4/A3.00
Y045	CHEMICAL	STORAGE	96.7a	#631	96.7a	#631	33/42b	99b	PT-1	99b/PT*	NA	*See Notes 20 & 4/A3.00
Y046	SOUND	CLOSET	99b1	NA	None	NA	42b	99b	PT-1	95c*	8'-0"	*See Notes 20 & 4/A3.00
Y047	OPERATIONS	OFFICE	96.5a	VCT-1	96.5b	VB-1	42b	99b	PT-1	95b	8'-0"	See A5.03YN
Y050		CORRIDOR	99b1	NA	96.5b	VB-1	42b	99b	PT-1	95b	8'-0"	See A2.33, *Note 38
Y051		TEL/DATA #3	99b1	NA	None	NA	42b	99b*	PT-1	None**	NA	*See Note 1 **See Note N

NUMBER	ROOM		FLOOR	FLOOR COLOR	BASE	BASE COLOR	WALL SUBSTRATE	WALL FINISH	WALL COLOR	CEILING	CEILINGHT	REMARKS: SEE GENERAL NOTES AND REMARKS NOTES AND END OF SCHEDULE
Y052		STAIR #5 (OP)	33.6	MULTI*	42n	CB	42c	GF	NA	*	VARIES	See A2.34, A6.16, *Notes 2 & 7
Y059		STAIR #3	99b1	NA	96.5b	VB-1	33/42b	99b*	PT-1*	92a2	9'-0"	See A2.34 & A6.14
Y060		CORRIDOR (OP)	33.6	MULTI	42n	CB	42c	GF	VARIES*	95b/92a2	VARIES	See A2.33, *Note 38
Ref Drawing: A1.1YN												
Y101		CORRIDOR (OP)	33.6	MULTI	42n/96.5b	CB/VB-1	42c/92a5	GF/99b*	VARIES*	95b/92a2	VARIES	See A2.36, A2.37, *Note 38
Y110	SERVICE	CORRIDOR	99b1	NA	96.5b	VB-1	42b	99b	PT-1	95b	10'-0"	
Y121	RECEPTION/	WAITING	96.5c*	MULTI	96.5b	VB-1	42b/92a1	99b	PT-1	95b	10'-0"	*See Note 30
Y123	TRAINER	OFFICE	96.8g	CPT-7	96.5b	VB-2	42b/92a1	99b	PT-1	95b	10'-0"	See A5.11YN
Y124	TRAINER	OFFICE	96.8g	CPT-7	96.5b	VB-2	42b/92a1	99b	PT-1	95b	10'-0"	
Y139		CORRIDOR	96.2a	R-8	96.5b	VB-1	42b/92a5	99b	PT-1	95b	10'-0"	
Y141		OFFICE	96.8g	CPT-7	96.5b	VB-2	42b/92a1	99b	PT-1	95b	10'-0"	
Y150		CORRIDOR (OP)	33.6	MULTI	42n/96.5b	CB/VB-1	42c/92a5	GF/99b*	VARIES*	95b/92a2	13'-0"	See A2.33, A2.34, *Note 38
Y151		TEL./DATA #3	99b1	NA	96.5b	VB-1	42b/92a1	99b*	PT-1*	None	NA	*See Note 1, **See Note N
Y152		STAIR #5 (OP)	33.6	MULTI	*	PT-30	42c/92a5	GF/99b*	VARIES*	None	NA	See A2.34, A6.16, *Note 2
Y159		STAIR #3	99b1	NA	96.5b	VB-1	33/42b	99b*	PT-1*	92a2	14'-0"	See A2.34 & A6.14
Y160	BIKE	STORAGE	99b1	NA	96.5b	VB-1	42b	99b	PT-1	None*	NA	*See Note N
Y161	FAN	ROOM	99b1	NA	96.5b	VB-1	33/42b	99b	PT-1	None*	NA	*See Note N
Y162		SHOP	99b1	NA	96.5b	VB-1	42b	99b	PT-1	None*	NA	*See Note N
Y163	BREAK	ROOM	96.5a	VCT-1	96.5b	VB-1	42b	99b*	PT-1	95b	9'-0"	
Y164	GENERAL	STORAGE	99b1	NA	96.5b	VB-1	42b	99b	PT-1	None*	NA	*See Note N
Y165		TOILET	93a*	MULTI	93b7	CT-2	42b	99b/93b*	PT-1/*	95c*	9'-0"	*See Notes 5, 8 & 14, See A5.12YN
Y166	DFP	STORAGE	99b1	NA	96.5b	VB-1	42b	99b	PT-1	None*	NA	*See Note N
Y167		OFFICE	96.5a	VCT-1	96.5b	VB-1	42b	99b	PT-1	95b	9'-0"	
Y168		STORAGE	99b1	NA	96.5b	VB-1	42b	99b	PT-1	None*	NA	*See Note N
Y180		CORRIDOR (OP)	33.6	MULTI	42n/96.5b	CB/VB-1	42c/92a5	GF/99b*	VARIES*	95b/92a2	13'-0"	See A2.33, A2.34, *Note 38
Ref Drawing: A1.2YN												
Y201		CORRIDOR (OP)	33.6	MULTI	42n/96.5b	CB/VB-1	42c/92a5	GF/99b*	VARIES*	95b/92a2	VARIES	See A2.36, A2.37, *Note 38

NUMBER	ROOM		FLOOR	FLOOR COLOR	BASE	BASE COLOR	WALL SUBSTRATE	WALL FINISH	WALL COLOR	CEILING	CEILINGHT	REMARKS: SEE GENERAL NOTES AND REMARKS NOTES AND END OF SCHEDULE
Y233		VESTIBULE	99b1	NA	96.5b	VB-1	92a5	99b	PT-1	95b	10'-0"	
Y240		GYMNASIUM	96.4a	NA	96.5b1(Vent)	VCB-1	42b/92a7 **	99b*	VARIES*	95d/92a2	VARIES	See A5.21Y, *Note 45 **Note 11
Y241		JANITOR	99b1	NA	96.5b	VB-1	42b/92a5	99b	PT-1	None*	NA	*See Note N
Y242	GYM	STORAGE	99b1	NA	96.5b	VB-1	92a5	99b	PT-1	None*	NA	*See Note N
Y243	WRESTLING	STORAGE	99b1	NA	96.5b	VB-1	92a5	99b	PT-1	None*	NA	*See Note N
Y244	GYM	STORAGE	99b1	NA	96.5b	VB-1	92a5	99b	PT-1	None*	NA	*See Note N
Y245	CRD	OFFICE	96.5a	VCT-1	96.5b	VB-1	92a1	99b	PT-1	95b	9'-0"	See A5.24YN
Y246	CRD	EQUIP	96.5a	VCT-1	96.5b	VB-1	92a1	99b	PT-1	95b	12'-0"	
Y247	SOUND	CLOSET	99b1	NA	96.5b	VB-1	92a1	99b	PT-1	None*	NA	*See Note N
Y250		CORRIDOR (OP)	33.6	MULTI	42n/96.5b	CB/VB-1	42c/92a5	GF/99b*	VARIES*	95b/92a2	13'-0"	See A2.33, A2.34, *Note 38
Y251		TEL./DATA #3	99b1	NA	96.5b	VB-1	92a1	99b*	PT-1	None**	NA	*See Note 1, **Note N
Y252		STAIR #5 (OP)	33.6	MULTI*	*	PT-30	42c/92a5	GF/99b*	VARIES*	None	NA	See A2.34, A6.16, *Note 2
Y253		STORAGE	99b1	NA	96.5b	VB-1	42b/92a5	99b	PT-1	None*	NA	*See Note N
Y254		STORAGE	99b1	NA	96.5b	VB-1	42b/92a5	99b	PT-1	None*	NA	*See Note N
Y259		STAIR #3	99b1	NA	96.5b	VB-1	92a5	99b*	PT-1*	95b/92a2	12'-0"	See A6.13, *Note 2
Y260		CORRIDOR (OP)	33.6	MULTI	42n/96.5b	CB/VB-1	42c/92a5	GF/99b*	VARIES*	95b/92a2	13'-0"	See A2.33, A2.34, *Note 38
Ref Drawing: A1.3YN												
Y301		CORRIDOR	99b1	NA	96.5b	VB-1	42b/92a5	99b/MCP	*	95b/92a2	VARIES	See A2.36 & A2.37 *See Note 38
Y334		CORRIDOR	99b1	NA	96.5b	VB-1	92a5	99b/MCP	PT-1	95b	12'-0"	*See Note 38
Y335		STORAGE	99b1	NA	96.5b	VB-1	42b/92a5	99b	PT-1	None*	NA	*See Note N
Y350		CORRIDOR (OP)	33.6	MULTI	42n/96.5b	CB/VB-1	42c/92a5	GF/99b*	VARIES*	95b/92a2	13'-0"	See A2.33, A2.34, *Note 38
Y351		TEL./DATA #3	99b1	NA	96.5b	VB-1	92a1	99b*	PT-1*	None**	NA	*See Note 1, **Note N
Y352		STAIR #5 (OP)	33.6	MULTI*	*	PT-30	42c/92a5	GF/99b*	VARIES*	None	NA	See A2.34, A6.16, *Note 2
Y354	GENERAL	STORAGE	99b1	NA	96.5b	VB-1	42b/92a5	99b	PT-1	None*	NA	*See Note N
Y357	GENERAL	STORAGE	99b1	NA	96.5b	VB-1	42b/92a5	99b	PT-1	None*	NA	*See Note N
Y359		STAIR #3	99b1	NA	96.5b	VB-1	92a5	99b*	PT-1*	95b/92a2	12'-0"	See A6.13, *Note 2
Y360		CORRIDOR (OP)	33.6	MULTI	42n/96.5b	CB/VB-1	42c/92a5	GF/99b*	VARIES*	95b/92a2	13'-0"	See A2.33, A2.34, *Note 38

NUMBER	ROOM		FLOOR	FLOOR COLOR	BASE	BASE COLOR	WALL SUBSTRATE	WALL FINISH	WALL COLOR	CEILING	CEILINGHT	REMARKS: SEE GENERAL NOTES AND REMARKS NOTES AND END OF SCHEDULE
Ref Drawing: A1.4YN												
Y401		CORRIDOR	99b1	NA	96.5b	VB-1	42b/92a	99b/MCP	*	95b/92a2	10'-4"	See A2.36, A2.37, *Note 38
Y440	CS	GYMNASIUM	96.4b	NA	96.5b1(Vent.)	VCB-1	42b/92a7**	99b*	VARIES*	95d/92a2	VARIES	See A5.42YN, A5.43YN *Note 46**Note 13
Y441	GYM	STORAGE	99b1	NA	96.5b	VB-1	92a5	99b	PT-1	None*	NA	*See Note N
Y443	SOUND	CLOSET	99b1	NA	96.5b	VB-1	92a1	99b	PT-1	None*	NA	*See Note N
Y450		CORRIDOR (OP)	33.6	MULTI	42n/96.5b	CB/VB-1	42c/92a5	GF/99b*	VARIES*	**	VARIES	See A2.33, A2.34, *Note 38 **Note 16
Y451		TEL./DATA #3	99b1	NA	96.5b	VB-1	92a1	99b*	PT-1	None**	NA	*See Note 1, **See Note N
Y452		STAIR #5 (OP)	33.6	MULTI*	*	PT-30	42c/92a5	GF/99b*	VARIES*	None	NA	See A2.34, A6.16, *Note 2
Y458		ENTRY	126c/33.6	VARIES	42n	CB-1	42c	GF	*	95b	11'-4"	See A2.34, *Note 38
Y459		STAIR #3	99b1	NA	96.5b	VB-1	92a5	99b*	PT-1*	95b/92a2	11'-4"	See A6.13, *Note 2
Y460		CORRIDOR (OP)	33.6	MULTI	42n/96.5b	CB/VB-1	42c/92a5	GF/99b*	VARIES*	**	VARIES	See A2.33, A2.34, *Note 38 **Note 16
Ref Drawing: A1.5YN												
Y558		LOUNGE	99b1	NA	42n	CB-1	42c	GF	VARIES*	**	VARIES	*See A2.34 **Note 16
Y559		STAIR #3	99b1	NA	96.5b*	VB-1	92a5	99b*	PT-1	95b/92a2	10'-0"	See A6.13, *Note 2
Ref Drawing: A1.6YN												
Y640	SOUTH	MECHANICAL ROOM	96.7a	#631	96.7a	#631	42b/92a1	99b	PT-1	None*	NA	*See Note 4/A3.00
Y651	EXHAUST	PLENUM	99b1	NA	None	NA	42b/92a1	None	NA	None*	NA	*See Note 4/A3.00
Y652	EXHAUST	PLENUM	99b1	NA	None	NA	42b/92a1	None	NA	None*	NA	*See Note 4/A3.00
Y653		VESTIBULE	99b1	NA	None	NA	92a1	99b	PT-1	None*	NA	*See Note 4/A3.00
Y657		CORRIDOR	99b1	NA	None	NA	42b/92a1	99b	PT-1	None*	NA	*See Note 4/A3.00
Y658	PUMP	ROOM	96.7a	#631	96.7a	#631	42b/92a1	99b	PT-1	None*	NA	*See Note 4/A3.00
Y659		STAIR #3	99b1	NA	96.5b*	VB-1	92a5	99b	PT-1	95b**	10'-0"	See A6.13, *Note 2 **Note 4/A3.00
Ref Drawing: A1.0ZE												
B001		MECHANICAL	EXST	NA	EXST	NA	EXST	EXST	NA	EXST	NA	
B002	SKI	SUPPLY	EXST	NA	EXST	NA	EXST	EXST	NA	EXST	NA	
B003	SKI	SUPPLY	EXST	NA	EXST	NA	EXST	EXST	NA	EXST	NA	

NUMBER	ROOM		FLOOR	FLOOR COLOR	BASE	BASE COLOR	WALL SUBSTRATE	WALL FINISH	WALL COLOR	CEILING	CEILINGHT	REMARKS: SEE GENERAL NOTES AND REMARKS NOTES AND END OF SCHEDULE
Z001		CORRIDOR (OP)	33.6	MULTI	42n/96.5b	CB/VB-1	42c/92a5	GF/99b*	VARIES*	95b/92a2	8'-0"*	See A2.41, A6.20 & A6.25 *Note 44
Z002	CHANGE	ROOM	93a*	MULTI	93b7	CT-2	42b/92b	99b/93b*	PT-1	95c/72.4b	8'-0"	See A5.01ZE, *Notes 6, 8, & 20
Z003	CHANGE	ROOM	93a*	MULTI	93b7	CT-2	42b/92b	99b/93b*	PT-1	95c/72.4b	8'-0"	See A5.01ZE, *Notes 6, 8, & 20
Z004	DAY	LOCKERS	93a*	MULTI	93b7	CT-2	42b	99b/93b*	PT-1	95c*	8'-0"	See A5.01ZE, *Notes 6 & 20
Z005		VESTIBULE (OP)	33.6	MULTI	42n/96.5b	CB/VB-1	42c/92a5	GF/99b*	VARIES*	95b/92a2	VARIES	*See Note 44
Z020	INTRAMURAL	POOL	93a*	MULTI*	93b7	CT-2	42b/92f2	93b/72.4b*	*	95c/72.4b*	VARIES	See A5.03ZE, *Notes 4 & 20
Z021		JANITOR	99b1	NA	96.5b	VB-1	42b	99b	PT-1	99b/PT-1*	NA	*See Note 20
Z022	UNISEX	TOILET	93a*	MULTI	93b7	CT-2	42b	99b/93b*	PT-1/*	95c**	8'-0"	See A5.02ZE *See Note 5 **See Note 20
Z023	POOL	STORAGE	93a	CT-2	93b7	CT-2	33/42b	93b	CT-19	95c*	8'-0"	*See Note 20
Z024	WET	CLASS ROOM	93a	CT-2	93b7	CT-2	42b	99b	PT-1	95c*	8'-0"	See A5.02ZE, *See Note 20
Z025	DPE POOL	STORAGE	93a	CT-2	93b7	CT-2	42b	99b	PT-1	95c*	8'-0"	See A5.02ZE, *See Note 20
Z026	DECK	OFFICE	93a	CT-2	93b7	CT-2	42b	99b	PT-1	95c*	8'-0"	See A5.02ZE, *See Note 20
Z027	STAIR	#8 (OP)	33.6	MULTI	*	PT-30	42c	GF	VARIES*	92a2	VARIES	See A2.41, A6.20, *Note 2
Z028	SOUND	CLOSET	99b1	NA	96.5b	VB-1	42b	99b	PT-1	95c*	8'-0"	*See Note 20
Z029	SUMP PIT	ROOM	99b1	NA	None	NA	42b	99b	PT-1	99b/PT-1*	NA	*See Note 20
Z030	PUMP PIT	ROOM	99b1	NA	None	NA	42b	99b	PT-1	99b/PT-1*	NA	*See Note 20
Z032		STORAGE	93a	CT-2	93b7	CT-2	33/42b	93b	CT-19	99b/PT-1*	NA	*See Note 20
Z053		ELECTRICAL	99b1	NA	None	NA	42b	99b	PT-1	None	NA	*See Note N
Z054	EMERGENCY	ELECTRICAL	99b1	NA	None	NA	42b	99b	PT-1	None	NA	*See Note N
Z056		ELECTRICAL	99b1	NA	None	NA	42b	99b	PT-1	None	NA	*See Note N
Z070	ELEVATOR	CORRIDOR (OP)	33.6	MULTI	42n	CB	42c	GF	VARIES*	95b/92a2	9'-8"	*See A2.33, A2.34
Z090		VESTIBULE	99b1	NA	96.5b	VB-1	33/42b	99b	PT-1	95a	8'-0"	
Z091	CHEMICAL	STORAGE	99b1	NA	None	NA	33/42b	99b	PT-1	99b/PT-1*	NA	*See Note 20
Ref Drawing: A1.1ZE												
B101		VEST	EXST	EXST	EXST	EXST	EXST	99b	PT-16	92g	VARIES	See Note #10. See details for clg ht.
B102	CENTER	LOBBY	EXST	EXST	EXST	EXST	EXST	99b	PT-16	EXST/92g	EXST	See Note #9 & 10
B103		OFFICE	96.8b	CPT-2	96.5b	VB-2	EXST	99b	PT-16	92g	12'-0"	See Note #10
B104		VEST	EXST	EXST	EXST	EXST	EXST	99b	PT-16	EXST	EXST	See Note #10

NUMBER	ROOM		FLOOR	FLOOR COLOR	BASE	BASE COLOR	WALL SUBSTRATE	WALL FINISH	WALL COLOR	CEILING	CEILINGHT	REMARKS: SEE GENERAL NOTES AND REMARKS NOTES AND END OF SCHEDULE
B105		OFFICE	96.8b	CPT-2	96.5b	VB-2	EXST	99b	PT-16	EXST	EXST	See Note #10
B106		VEST	EXST	EXST	EXST	EXST	EXST	99b	PT-16	92g	EXST	See Note #10
B107	FIRE	COMMAND	96.5a	VCT-2	96.5b	VB-1	EXST	99b	PT-16	92g	EXST	See Note #10
B108		OFFICE	96.8b	CPT-2	96.5b	VB-2	EXST	99b	PT-16	92g	12'-0"	See Note #10
B109		STAIR	EXST	EXST	EXST	EXST	EXST	99b	PT-16	EXST	EXST	See Note #10
B110		STAIR	EXST	EXST	EXST	EXST	EXST	99b	PT-16	EXST	EXST	See Note #10
B112	WEST	LOBBY (OP)	33.6	MULTI*	42n/96.5b	CB/VB-1	42c/92a5	GF/99b*	VARIES*	92g	VARIES	See A2.41
Z027	STAIR	#8 (OP)	33.6	MULTI	*	PT-30	42c	GF	VARIES*	92a2*	VARIES	See A2.41, A6.20, *Note 2
Z101		CORRIDOR (OP)	33.6	MULTI	42n/96.5b	CB/VB-1	42c/92a5	GF/99b*	VARIES*	95b/92a2	VARIES	
Z102		MEN'S	93a*	MULTI	93b7	CT-2	92a5/92a3	99b/93b*	PT-1/*	95b	9'-0"	*See Note 5
Z103		WOMEN'S	93a*	MULTI	93b7	CT-2	92a5/92a3	99b/93b*	PT-1/*	95b	9'-0"	*See Note 5
Z105	GENERAL	STORAGE	99b1	NA	96.5b	VB-1	92a5	99b	PT-1	None*	NA	*See Note N
Z108		JANITOR	99b1	NA	96.5b	VB-1	92a5	99b	PT-1	None*	NA	*See Note N
Z109		CORRIDOR	99b1	NA	96.5b	VB-1	42b	99b	PT-1	95b	12'-0"	
Z110		TEL./DATA #4	99b1	NA	96.5b	VB-1	42b/92a1	99b*	PT-1*	None**	NA	*See Note 1, **Note N
Z114	STAIR	#4	99b1	NA	96.5b	VB-1	33/42b	99b*	PT-1*	95b/92a2	10'-4"	See A6.15, *Note 2
Z120		OBSERVATION (OP)	33.6	MULTI	42n/96.5b	CB/VB-1	42c/92a5	GF/99b*	VARIES*	95b/92a2	12'-0"	*See Note 38 & 44
Z121		LOUNGE (OP)	33.6	MULTI	42n/96.5b	CB/VB-1	42c/92a5	GF/99b*	VARIES*	95b/92a2	12'-8"	*See Note 38 & 44
Z122		FOP'S	96.8e	CPT-5	96.5b	VB-4	92a1	99b	PT-20	95b	10'-0"	
Z123		OFFICE	96.8e	CPT-5	96.5b	VB-4	92a1	99b	PT-20	95b	10'-0"	
Z153		ELECTRICAL	99b1	NA	96.5b	VB-1	42b/92a1	99b	PT-1	None*	NA	*See Note N
Z154	EMERGENCY	ELECTRICAL	99b1	NA	96.5b	VB-1	42b/92a1	99b	PT-1	None*	NA	*See Note N
Z155		VESTIBULE (OP)	33.6	MULTI	42n/96.5b	CB/VB-1	42c/92a5	GF/99b*	VARIES*	95b/92a2	10'-0"	
Z170	ELEVATOR	CORRIDOR (OP)	33.6	MULTI	42n/96.5b	CB/VB-1	42c/92a5	GF/99b*	VARIES*	95b/92a2	11'-4"	
Z190	ELEVATOR	LOBBY	99b1	NA	96.5b	VB-1	42b	99b	PT-1	95b	12'-0"	
Z191		ELECTRICAL	99b1	NA	96.5b	VB-1	42b/92a5	99b	PT-1	None*	NA	*See Note N
Z192		STORAGE	99b1	NA	96.5b	VB-1	42b/92a5	99b	PT-1	None*	NA	*See Note N
Z193	ICE	ROOM	99b1	NA	96.5b	VB-1	42b	99b	PT-1	95b	9'-0"	
Z194		UNLOADING	99b1	NA	96.5b	VB-1	42b	99b	PT-1	95b	9'-0"	

NUMBER	ROOM		FLOOR	FLOOR COLOR	BASE	BASE COLOR	WALL SUBSTRATE	WALL FINISH	WALL COLOR	CEILING	CEILINGHT	REMARKS: SEE GENERAL NOTES AND REMARKS NOTES AND END OF SCHEDULE
Ref Drawing: A1.2ZE												
B202	CENTER	LOBBY	EXST	NA	EXST	NA	EXST	99b	PT-16	EXST/92g	VARIES	*See Note 9, 10 and P28710
B203	MEETING/	READING	96.8b	CPT-4	96.5b	VB-4	EXST/92a1	99b/99b	PT-16	92g	12'-0"	*See Note 10
B204		PANTRY	96.5a	VCT-1	96.5b	VB-1	EXST/92a1	99b/99b*	PT-16	99b/PT**	NA	Note 10 *Note 26, **Note 20
B208	MEETING/	READING	96.8b	CPT-4	96.5b	VB-4	EXST/92a1	99b/99b	PT-16	92g	12'-0"	*See Note 10
B209		STAIR	EXST	NA	EXST	NA	EXST	99b	PT-16	EXST	EXST	*See Note 10
B210		STAIR	EXST	NA	EXST	NA	EXST	99b	PT-16	EXST	EXST	*See Note 10
B211	EAST	LOBBY	EXST	NA	EXST	NA	EXST	99b	PT-16	92g	VARIES	*See Note 10. See details for clg ht.
B212	WEST	LOBBY	EXST	NA	EXST	NA	EXST/92a1	99b/99b	PT-16	92g	VARIES	*See Note 10. See details for clg ht.
Z201		CORRIDOR (OP)	33.6	MULTI	42n	CB	42c	GF	VARIES*	95b	13'-0"	*See Note 38
Z202		MEN'S	93a*	MULTI	93b7	CT-2	92a3/92a5	93b/99b*	*/PT-1	95b	9'-0"	*See Note 5
Z203		WOMEN'S	93a*	MULTI	93b7	CT-2	92a3/92a5	93b/99b*	*/PT-1	95b	9'-0"	*See Note 5
Z204	MEN'S	DAY USE LOCKERS	93a*	MULTI	93b7	CT-2	92a3*/92a5	93b/99b*	*/PT-1	95c**	9'-0"	See A5.21ZE, *Note 6, **Note 8
Z205	WOMEN'S	DAY USE LOCKERS	93a*	MULTI	93b7	CT-2	92a3*/92a5	93b/99b*	*/PT-1	95c**	9'-0"	See A5.22ZE, *Note 6, **Note 8
Z206		WOMEN'S	93a*	MULTI	93b7	CT-2	92a3/92a5	93b/99b*	*/PT-1	95b	9'-0"	*See Note 5
Z207		MEN'S	93a*	MULTI	93b7	CT-2	92a3/92a5	93b/99b*	*/PT-1	95b	9'-0"	*See Note 5
Z208		JANITOR	99b1	NA	96.5b	VB-1	92a5	99b	PT-1	None*	NA	*See Note N
Z209		CORRIDOR	99b1	NA	96.5b	VB-1	42b	99b	MCP-1	95b	12'-4"	
Z210		TEL./DATA #4	99b1	NA	96.5b	VB-1	42b/92a1	99b*	PT-1	None**	NA	*See Note 1, **Note N
Z212		ELECTRICAL	99b1	NA	95.5b	VB-1	42b/92a1	99b	PT-1	None*	NA	*See Note N
Z213	EMER.	ELECTRIC	99b1	NA	96.5b	VB-1	42b/92a1	99b	PT-1	None*	NA	*See Note N
Z214	STAIR	#4	99b1	NA	96.5b	VB-1	42b/92a5	99b*	PT-1*	92a2	10'-4"	See A6.15, *Note 2
Z220	VARSITY	WRESTLING	99b1/114y		96.5b	VB-1	92a6	99b*	PT-1	95b	9'-8"UNO	See A5.23ZE, Resilient Mat Underlay*Note 11
Z221	WRESTLING	STORAGE	99b1	NA	96.5b	VB-1	92a5	99b	PT-1	None*	NA	*See Note N
Z222	TEAM	ROOM	96.5c	R-3	96.5b	VB-1	92a5	99b	PT-1	95b	9'-0"	
Z223		VESTIBULE	94a	MULTI	94d	TZ-7	92a5	99b*	VARIES*	95b	9'-8"UNO	See A5.25ZE *Note 23
Z224		OFFICE	96.8d	CPT-2	96.5b	VB-4	92a1	99b	PT-20	95b	9'-0"	See A5.25ZE
Z225		OFFICE	96.8d	CPT-2	96.5b	VB-4	92a1	99b	PT-20	95b	9'-0"	See A5.25ZE

NUMBER	ROOM		FLOOR	FLOOR COLOR	BASE	BASE COLOR	WALL SUBSTRATE	WALL FINISH	WALL COLOR	CEILING	CEILINGHT	REMARKS: SEE GENERAL NOTES AND REMARKS NOTES AND END OF SCHEDULE
Z226	SOUND	CLOSET	96.8b	CPT-2	96.5b	VB-2	92a1	99b	PT-1	None*	9'-0"	*See Note N
Z227	INTRAMURAL	WRESTLING	99b1/114y	NA	96.5b	VB-1	92a6	99b*	PT-1	95b	9'-8"UNO	See A5.24ZE, Resilient Mat Underlay *Note 12
Z228	WRESTLING	STORAGE	99b1	NA	96.5b	VB-1	92a5	99b	PT-1	None*	NA	*See Note N
Z229	SOUND	CLOSET	99b1	NA	96.5b	VB-1	92a1	99b	PT-1	None*	NA	*See Note N
Z253		ELECTRICAL	99b1	NA	96.5b	VB-1	42b/92a1	99b	PT-1	None*	NA	*See Note N
Z254	EMERGENCY	ELECTRICAL	99b1	NA	96.5b	VB-1	42b/92a1	99b	PT-1	None*	NA	*See Note N
Z255		VESTIBULE	94a	MULTI	94d	TZ-7	42c	GF	VARIES*	95b	10'-10"	*Note 23
Z270	ELEVATOR	CORRIDOR (OP)	33.6	MULTI	42n	CB	42c	GF	VARIES*	95b	9'-6"	
Ref Drawing: A1.3ZE												
B302	CENTER	LOBBY	EXST	NA	EXST	NA	EXST	EXST	NA	EXST/95b	NA	*See Note 10
B303		XO	96.8b	CPT-4	EXST	NA	EXST/92a1	99b	PT-16	95b	10'-0"	*See Note 10
B304		OPS	96.8b	CPT-4	EXST	NA	EXST/92a1	99b	PT-16	95b	10'-0"	*See Note 10
B308		DOI	96.8b	CPT-4	EXST	NA	EXST/92a1	99b	PT-16	95b	10'-0"	*See Note 10
B309		STAIR	EXST	NA	EXST	NA	EXST	99b	PT-16	EXST	EXST	*See Note 10
B310		STAIR	EXST	NA	EXST	NA	EXST	99b	PT-16	EXST	EXST	*See Note 10
B311	EAST	LOBBY	94a	MULTI	94d	TZ-7	42c/92a5	99b*	PT-16	95b/92a2	VARIES	See A2.36, A2.37, *Note 38 & 23
B312	WEST	LOBBY	94a	MULTI	94d	TZ-7	42c/92a5	99b*	PT-16	95b/92a2	VARIES	See A2.36, A2.37, *Note 38 & 23
Z301		CORRIDOR (OP)	33.6	MULTI	42n	CB	42c	GF	VARIES*	95b/92a2	13'-0"	See A2.36, A2.37, *Note 38
Z302		MEN'S	93a*	MULTI	93b7	CT-2	92a3/93a5	93b/99b*	*/PT-1	95b	9'-0"	*See Note 5
Z303		WOMEN'S	93a*	MULTI	93b7	CT-2	92a3/93a5	93b/99b*	*/PT-1	95b	9'-0"	*See Note 5
Z307	CLIMBING	WALL	*	*	*	*		84b/*	*	**	VARIES	*See Note 22 **See Note 16
Z308		JANITOR	99b1	NA	96.5b	VB-1	92a5	99b	PT-1	None*	NA	*See Note N
Z309		CORRIDOR	99b1	NA	96.5b	VB-1	42b	99b	MCP-1	95b	12'-4"	
Z310		TEL./DATA #4	99b1	NA	96.5b	VB-1	92a1	99b*	PT-1*	None**	NA	*See Note 1, **Note N
Z311	GENERAL	STORAGE	99b1	NA	96.5b	VB-1	42b/92a5	99b	PT-1	None*	NA	*See Note N
Z312		ELECTRIC	99b1	NA	96.5b	VB-1	42b/92a1	99b	PT-1	None*	NA	*See Note N
Z314	STAIR	#4	99b1	NA	96.5b	VB-1	92a5	99b*	PT-1*	92a2	10'-4"	See A6.15, *Note 2
Z320		ADMINISTRATION	96.8a	CPT-1	96.5b	VB-4	92a1	99b	*	95b	10'-0"	*Refer A5.33ZE

NUMBER	ROOM		FLOOR	FLOOR COLOR	BASE	BASE COLOR	WALL SUBSTRATE	WALL FINISH	WALL COLOR	CEILING	CEILINGHT	REMARKS: SEE GENERAL NOTES AND REMARKS NOTES AND END OF SCHEDULE
Z322	CONFERENCE	ROOM	96.8d	CPT-2	96.5b	VB-4	92a1	99b	*	95b	10'-0"	*Refer A5.32ZE
Z323	STAFF	OFFICE	96.8d	CPT-2	96.5b	VB-4	92a1	99b	PT-20	95b	10'-0"	
Z324	STAFF	OFFICE	96.8d	CPT-2	96.5b	VB-4	92a1	99b	PT-20	95b	10'-0"	
Z325		STORAGE	99b1	NA	96.5b	VB-1	92a1	99b	PT-1	None*	NA	*See Note N
Z326	ASST.	ADMIN.	96.8a	CPT-1	96.5b	VB-4	92a1	99b	PT-20	95b	10'-0"	
Z327		STORAGE	99b1	NA	96.5b	VB-1	92a1	99b	PT-1	None*	NA	*See Note N
Z328	CLASS	COORDINATORS	96.8d	CPT-2	96.5b	VB-4	92a1	99b	PT-20	95b	10'-0"	
Z329		OFFICE	96.5d	CPT-2	96.5b	VB-4	92a1	99b	PT-20	95b	10'-0"	
Z330	IMO	OFFICE	96.8d	CPT-2	96.5b	VB-4	92a1	99b	PT-20	95b	10'-0"	
Z331	COMPETITIVE	SPORTS	96.8d	CPT-2	96.5b	VB-4	92a1	99b	PT-20	95b	10'-0"	
Z332		OFFICE	96.8d	CPT-2	96.5b	VB-4	92a1	99b	PT-20	95b	10'-0"	
Z333		KITCHEN	96.5a	VCT-2	96.5b	VB-3	92a1	99b*	PT-20	95b	10'-0"	A5.32ZE *Note 36
Z334	STAFF	SUITE	96.8d	CPT-2	96.5b	VB-4	92a1	99b	PT-20	95b	10'-0"	
Z335	STAFF	OFFICE	96.8d	CPT-2	96.5b	VB-4	92a1	99b	PT-20	95b	10'-0"	
Z336		CORRIDOR	96.8f	CPT-6	96.5b	VB-4	92a1	99b	PT-20	95b	10'-0"	*Refer 5/A5.33ZE
Z337		DEPUTY	96.8c	CPT-3	96.5b	VB-4	92a1	99b	MCP-2	95b	10'-0"	
Z338		MOS	96.8c	CPT-3	96.5b	VB-4	92a1	99b	MCP-2	95b	10'-0"	
Z339	ADMIN.	SUPPORT	96.8f	CPT-6	96.5b	VB-4	92a1	99b	PT-20	95b	10'-0"	See A5.33ZE
Z340		CORRIDOR	96.8a	CPT-1	96.5b	VB-4	92a1	99b	PT-20	95b	10'-0"	
Z341	MEDIA	PROJECTION	96.8d	CPT-2	96.5b	VB-4	92a1	99b	PT-20	95b	12'-0"	See A5.32ZE
Z342		STORAGE	96.5a	VCT-2	96.5b	VB-3	92a1	99b	PT-20	None*	NA	*See Note N
Z343	OFFICE	VISITING PROF.	96.8d	CPT-2	96.5b	VB-4	92a1	99b	PT-20	95b	10'-0"	
Z344	STAFF	SUITE	96.8d	CPT-2	96.5b	VB-4	92a1	99b	PT-20	95b	10'-0"	
Z345	STAFF	SUITE	96.8d	CPT-2	96.5b	VB-4	92a1	99b	PT-20	95b	10'-0"	
Z346		COPY	96.5a	VCT-1	96.5b	VB-3	92a1	99b*	PT-20	95b	10'-0"	A5.33ZE *Note 36
Z347	STAFF	OFFICE	96.8d	CPT-2	96.5b	VB-4	92a1	99b	PT-20	95b	10'-0"	
Z348	COUNSELING	ROOM	96.8d	CPT-2	96.5b	VB-4	92a1	99b	PT-20	95b	10'-0"	
Z349	ADMIN.	STORAGE	96.5a	VCT-2	96.5b	VB-3	92a1	99b	PT-20	None*	NA	*See Note N
Z350	HUMAN	PERFORMANCE LAB	96.5c	R-6	96.5b	VB-3	42b/92a1	99b*	PT-20	95b	10'-0"	A5.33ZE *Note 37

NUMBER	ROOM		FLOOR	FLOOR COLOR	BASE	BASE COLOR	WALL SUBSTRATE	WALL FINISH	WALL COLOR	CEILING	CEILINGHT	REMARKS: SEE GENERAL NOTES AND REMARKS NOTES AND END OF SCHEDULE
Z351		STORAGE	96.5a	VCT-1	96.5b	VB-1	92a1	99b	PT-20	None*	NA	*See Note N
Z352	STAFF	OFFICE	96.8d	CPT-2	96.5b	VB-4	92a1	99b	PT-20	95b	10'-0"	
Z353		ELECTRIC	99b1	NA	96.5b	VB-1	92a1	99b	PT-1	None*	NA	*See Note N
Z354		EMER. ELEC.	99b1	NA	96.5b	VB-1	92a1	99b	PT-1	None*	NA	*See Note N
Z355	GUIDANCE/	TESTING	96.8d	CPT-2	96.5b	VB-4	92a1	99b	PT-20	95b	10'-0"	
Z357	IMO	STORAGE	96.5a	VCT-2	96.5b	VB-3	92a1	99b	PT-20	None	NA	*See Note N
Z356		VESTIBULE	94a	MULTI	94d	TZ-7	92a5	99b*	VARIES*	95b/92a2	9'-4"	See A2.33, A2.34, *Note 38
Z370	ELEVATOR	CORRIDOR (OP)	33.6	MULTI	42n	CB	42c	GF	VARIES*	95b/92a2	11'-4"	See A2.33, A2.34, *Note 38
Ref Drawing: A1.4ZE												
Z401		CORRIDOR (OP)	33.6	MULTI	42n/96.5b	CB/VB-1	42c/92a5	GF/99b*	VARIES*	None	NA	See A2.33 *Note 38
Z402	UNISEX	TOILET	93a*	MULTI	93b7	CT-2	92a3/92a5	93b/99b*	*/PT-1	95b	9'-0"	*See Note 5
Z408		JANITOR	99b1	NA	96.5b	VB-1	92a5	99b	PT-1	None*	NA	*See Note N
Z409		CORRIDOR	99b1	NA	96.5b	VB-1	42b	99b	MCP-1	95b*	13'-8"	*See Note 4/A3.00
Z410		TEL./DATA #4	99b1	NA	96.5b	VB-1	92a1	99b*	PT-1	None**	NA	*See Note 1, **Note N
Z411		STORAGE	99b1	NA	96.5b	VB-1	92a1	99b	PT-1	None*	NA	*See Note 4/A3.00
Z412		ELECTRIC	99b1	NA	96.5b	VB-1	42b/92a1	99b	PT-1	None*	NA	*See Note 4/A3.00
Z413	EMER.	ELECTRIC	99b1	NA	96.5b	VB-1	42b/92a1	99b	PT-1	None	NA	*See Note N
Z414	STAIR	#4	99b1	NA	96.5b	VB-1	33/42b	99b*	PT-1*	95b	10'-0"	See A6.15, *Note 2
Z420	NORTH	MECH. ROOM	96.7a	#631	96.7a	#631	42a/92a1	99b	PT-1	None*	NA	*See Note 4/A3.00
Z453		ELECTRIC	99b1	NA	96.5b	VB-1	92a1	99b	PT-1	None*	NA	*See Note N
Z454	EMERGENCY	ELECTRIC	99b1	NA	96.5b	VB-1	92a1	99b	PT-1	None*	NA	*See Note N
Z455		VESTIBULE	99b1	NA	96.5b	VB-1	92a1	99b	PT-1	None*	NA	*See Note N
Z470	ELEVATOR	CORRIDOR (OP)	33.6	MULTI	42n	CB	42c	GF	VARIES*	95b/92a2	11'-4"	See A2.33, A2.34, *Note 38
Ref Drawing: A1.5ZE												
Z555		VESTIBULE	99b1	NA	None	VB-1	92a1	99b	PT-1	None*	NA	*See Note N
Z556	ELEVATOR	MACH. ROOM	99b1	NA	None	VB-1	92a1	None	NA	95a	8'-0"	
Z590		VESTIBULE	99b1	NA	None	VB-1	92a1	99b	PT-1	None*	NA	*See Note N

NUMBER	ROOM		FLOOR	FLOOR COLOR	BASE	BASE COLOR	WALL SUBSTRATE	WALL FINISH	WALL COLOR	CEILING	CEILINGHT	REMARKS: SEE GENERAL NOTES AND REMARKS NOTES AND END OF SCHEDULE
Ref Drawing: A1.6ZE												
Z690		VESTIBULE	99b1	NA	None	NA	92a5	99b	PT-1	None*	NA	*See Note N
Z691	STAIR	#9	99b1	NA	96.5b*	VB-1	92a5*	99b*	PT-1*	None**	NA	*See Note 2 **See Note N
Ref Drawing: A1.6ZE/DWG. Number												
Z790	ELEVATOR	MACHINE ROOM	99b1	NA	None	NA	92a1	99b	PT-1	95a	8'-0"	
Ref Drawing: A1.1A												
A100		LOBBY	EXST	EXST	EXST	EXST	EXST/92a5	EXST/99b	PT-16	EXST	EXST	DO NOT PAINT EXST MASONRY
A101		VEST	EXST	EXST	EXST	EXST	EXST/92a5	EXST/99b	PT-16	EXST	EXST	DO NOT PAINT EXST MASONRY
A104		VEST	EXST	EXST	EXST	EXST	EXST/92a5	EXST/99b	PT-16	EXST	EXST	DO NOT PAINT EXST MASONRY
A105		LOBBY	EXST	EXST	EXST	EXST	EXST/92a5	EXST/99b	PT-16	EXST	EXST	DO NOT PAINT EXST MASONRY
A108		LOBBY	EXST	EXST	EXST	EXST	EXST	EXST	EXST	EXST	EXST	
1041		VESTIBULE	EXST	EXST	EXST	EXST	EXST	EXST	EXST	EXST	EXST	
1042		CORRIDOR	EXST	EXST	EXST	EXST	EXST	EXST	EXST	EXST	EXST	
1044		BOXING	EXST	EXST	EXST	EXST	EXST	EXST	EXST	EXST	EXST	
1045		CUSTODIAL	EXST	EXST	EXST	EXST	EXST	EXST	EXST	EXST	EXST	
1046		VESTIBULE	EXST	EXST	EXST	EXST	EXST	EXST	EXST	EXST	EXST	
1047		BOXING	EXST	EXST	EXST	EXST	EXST	EXST	EXST	EXST	EXST	
1054		FITNESS	EXST	EXST	EXST	EXST	EXST	EXST	EXST	EXST	EXST	
1055		VESTIBULE	EXST	EXST	EXST	EXST	EXST	EXST	EXST	EXST	EXST	
1204		PT OFFICE	EXST	EXST	EXST	EXST	EXST	EXST	EXST	EXST	EXST	
1205		TOILET	EXST	EXST	EXST	EXST	EXST	EXST	EXST	EXST	EXST	
1206		ICE MACHINE	EXST	EXST	EXST	EXST	EXST	EXST	EXST	EXST	EXST	
1207		PT/ REHABILITATION	EXST	EXST	EXST	EXST	EXST	EXST	EXST	EXST	EXST	
1208		DPE TRAINING	EXST	EXST	EXST	EXST	EXST	EXST	EXST	EXST	EXST	
1209		DPE OFFICE	EXST	EXST	EXST	EXST	EXST	EXST	EXST	EXST	EXST	
1210		PE STORAGE	EXST	EXST	EXST	EXST	EXST	EXST	EXST	EXST	EXST	

NUMBER	ROOM		FLOOR	FLOOR COLOR	BASE	BASE COLOR	WALL SUBSTRATE	WALL FINISH	WALL COLOR	CEILING	CEILINGHT	REMARKS: SEE GENERAL NOTES AND REMARKS NOTES AND END OF SCHEDULE
1211		WAITING	EXST	EXST	EXST	EXST	EXST	EXST	EXST	EXST	EXST	
Ref Drawing: A1.1A1 (Option OP02)												
A100		LOBBY	EXST	EXST	EXST	EXST	EXST/92a5	EXST/99b	PT-16	EXST	EXST	DO NOT PAINT EXST MASONRY
A101		VEST	EXST	EXST	EXST	EXST	EXST/92a5	EXST/99b	PT-16	EXST	EXST	DO NOT PAINT EXST MASONRY
A102	PE	FITNESS	96.2a	R-8	96.2a/96.5b	VB-1	EXST	99b	PT-1	EXST	EXST	See A5.10A
A103	PE	FITNESS	96.2a	R-8	96.2a/96.5b	VB-1	EXST	99b	PT-1	EXST	EXST	See A5.11A
A104		VEST	EXST	EXST	EXST	EXST	EXST/92a5	EXST/99b	PT-16	EXST	EXST	DO NOT PAINT EXST MASONRY
A105		LOBBY	EXST	EXST	EXST	EXST	EXST/92a5	EXST/99b	PT-16	EXST	EXST	DO NOT PAINT EXST MASONRY
A106		OFFICE	96.8e	CPT-5	96.5b	VB-2	92a1	99b	PT-1	95b	9'-0"	
A107		STORAGE	96.5a	VCT-1	96.5b	VB-1	92a1	99b	PT-1	95a	9'-0"	
A108		LOBBY	EXST	EXST	EXST	EXST	EXST	EXST	EXST	EXST	EXST	
A109		STORAGE	96.5a	VCT-1	96.5b	VB-1	92a1	99b	PT-1	95a	9'-0"	
A110		OFFICE	96.8e	CPT-5	96.5b	VB-2	92a1	99b	PT-1	95b	9'-0"	
A111	SOUND	CLOSET	96.5a	VCT-1	96.5b	VB-1	92a1	99B	PT-1	95a	9'-0"	
A112	SOUND	CLOSET	96.5a	VCT-1	96.5b	VB-1	92a1	99B	PT-1	95a	9'-0"	
Ref Drawing: A1.2A												
A200		LOBBY	EXST	NA	EXST	NA	EXST/92a5	EXST/99b	PT-16	EXST	EXST	DO NOT PAINT EXST MASONRY
A201		VEST	EXST	NA	EXST	NA	EXST/92a5	EXST/99b	PT-16	EXST	EXST	DO NOT PAINT EXST MASONRY
A202	HAYES	GYMNASIUM	EXST	NA	EXST	NA	EXST	EXST	NA	EXST	EXST	
A204		VEST	EXST	NA	EXST	NA	EXST/92a5	EXST/99b	PT-16	EXST	EXST	DO NOT PAINT EXST MASONRY
A205		LOBBY	EXST	NA	EXST	NA	EXST/92a5	EXST/99b	PT-16	EXST	EXST	DO NOT PAINT EXST MASONRY
Ref Drawing: A1.3A												
A300		VEST	EXST	EXST	EXST	EXST	EXST	EXST	EXST	EXST	EXST	
A301		STAIR #7	99b1	NA	*	*	EXST	99b	PT-16	EXST	EXST	See A6.20, *Note 2
A302		OFFICE	96.8b	CPT-4	96.5b	VB-4	92a	99b	PT-1	95b	*	*SEE A1.3YS
A303		OFFICE	96.8b	CPT-4	96.5b	VB-4	92a	99b	PT-1	95b	*	*SEE A1.3YS

NUMBER	ROOM		FLOOR	FLOOR COLOR	BASE	BASE COLOR	WALL SUBSTRATE	WALL FINISH	WALL COLOR	CEILING	CEILINGHT	REMARKS: SEE GENERAL NOTES AND REMARKS NOTES AND END OF SCHEDULE
A304		VEST	EXST	EXST	EXST	EXST	EXST	EXST	EXST	EXST	EXST	
A305		LOBBY	EXST	EXST	EXST	EXST	EXST	EXST	EXST	EXST	EXST	
A306	HAYES GYM	TRACK LEVEL	EXST	EXST	EXST	EXST	EXST	EXST	EXST	EXST	EXST	
Terrazzo Flooring Option: OP 201												
Y101		CORRIDOR	94a*	MULTI*	42n/94d	CB-1/TZ-7						Refer to Spec Section 01030, *Note 23
Y103		ENTRY	126c/94a*	MULTI*	42n/94d	CB-1/TZ-7						Refer to Spec Section 01030, *Note 23
Y104	SOUTH	LOBBY	94a*	MULTI*	42n/94d	CB-1/TZ-7						Refer to Spec Section 01030, *Note 23
Y201		CORRIDOR	94a*	MULTI*	42n/94d	CB-1/TZ-7						Refer to Spec Section 01030, *Note 23
Y215		CORRIDOR	94a*	MULTI*	42n/94d	CB-1/TZ-7						Refer to Spec Section 01030, *Note 23
Y050		CORRIDOR	94a*	MULTI*	42n/94d	CB-1/TZ-7						Refer to Spec Section 01030, *Note 23
Y060		CORRIDOR	94a*	MULTI*	42n/94d	CB-1/TZ-7						Refer to Spec Section 01030, *Note 23
B112	WEST	LOBBY	94a*	MULTI*	42n/94d	CB-1/TZ-7						Refer to Spec Section 01030, *Note 23
Y101		CORRIDOR	94a*	MULTI*	42n/94d	CB-1/TZ-7						Refer to Spec Section 01030, *Note 23
Y150		CORRIDOR	94a*	MULTI*	42n/94d	CB-1/TZ-7						Refer to Spec Section 01030, *Note 23
Y180		CORRIDOR	94a*	MULTI*	42n/94d	CB-1/TZ-7						Refer to Spec Section 01030, *Note 23
Y201		CORRIDOR	94a*	MULTI*	42n/94d	CB-1/TZ-7						Refer to Spec Section 01030, *Note 23
Y250		CORRIDOR	94a*	MULTI*	42n/94d	CB-1/TZ-7						Refer to Spec Section 01030, *Note 23
Y260		CORRIDOR	94a*	MULTI*	42n/94d	CB-1/TZ-7						Refer to Spec Section 01030, *Note 23
Y350		CORRIDOR	94a*	MULTI*	42n/94d	CB-1/TZ-7						Refer to Spec Section 01030, *Note 23
Y360		CORRIDOR	94a*	MULTI*	42n/94d	CB-1/TZ-7						Refer to Spec Section 01030, *Note 23
Y450		CORRIDOR	94a*	MULTI*	42n/94d	CB-1/TZ-7						Refer to Spec Section 01030, *Note 23
Y458		ENTRY	126c/94a*	MULTI*	42n/94d	CB-1/TZ-7						Refer to Spec Section 01030, *Note 23
Y460		CORRIDOR	94a*	MULTI*	42n/94d	CB-1/TZ-7						Refer to Spec Section 01030, *Note 23
Z001		CORRIDOR	94a*	MULTI*	42n/94d	CB-1/TZ-7						Refer to Spec Section 01030, *Note 23
Z005		VESTIBULE	94a*	MULTI*	42n/94d	CB-1/TZ-7						Refer to Spec Section 01030, *Note 23
Z070	ELEVATOR	CORRIDOR	94a*	MULTI*	42n/94d	CB-1/TZ-7						Refer to Spec Section 01030, *Note 23
Z101		CORRIDOR	94a*	MULTI*	42n/94d	CB-1/TZ-7						Refer to Spec Section 01030, *Note 23
Z120		OBSERVATION	94a*	MULTI*	42n/94d	CB-1/TZ-7						Refer to Spec Section 01030, *Note 23

NUMBER	ROOM		FLOOR	FLOOR COLOR	BASE	BASE COLOR	WALL SUBSTRATE	WALL FINISH	WALL COLOR	CEILING	CEILINGHT	REMARKS: SEE GENERAL NOTES AND REMARKS NOTES AND END OF SCHEDULE
Z121		LOUNGE	94a*	MULTI*	42n/94d	CB-1/TZ-7						Refer to Spec Section 01030, *Note 23
Z155		VESTIBULE	94a*	MULTI*	42n/94d	CB-1/TZ-7						Refer to Spec Section 01030, *Note 23
Z170	ELEVATOR	CORRIDOR	94a*	MULTI*	42n/94d	CB-1/TZ-7						Refer to Spec Section 01030, *Note 23
Z201		CORRIDOR	94a*	MULTI*	42n/94d	CB-1/TZ-7						Refer to Spec Section 01030, *Note 23
Z270	ELEVATOR	CORRIDOR	94a*	MULTI*	42n/94d	CB-1/TZ-7						Refer to Spec Section 01030, *Note 23
Z301		CORRIDOR	94a*	MULTI*	42n/94d	CB-1/TZ-7						Refer to Spec Section 01030, *Note 23
Z370	ELEVATOR	CORRIDOR	94a*	MULTI*	42n/94d	CB-1/TZ-7						Refer to Spec Section 01030, *Note 23
Z401		CORRIDOR	94a*	MULTI*	42n/94d	CB-1/TZ-7						Refer to Spec Section 01030, *Note 23
Z470	ELEVATOR	CORRIDOR	94a*	MULTI*	42n/94d	CB-1/TZ-7						Refer to Spec Section 01030, *Note 23
Stair #5 Finish Option: OP												
Y052		STAIR #5	94a*	MULTI*	42n/94d	CB-1/TZ-7						Refer to Spec Section 01030, *Note 23
Y152		STAIR #5	94a*	MULTI*	42n/94d	CB-1/TZ-7						Refer to Spec Section 01030, *Note 23
Y252		STAIR #5	94a*	MULTI*	42n/94d	CB-1/TZ-7						Refer to Spec Section 01030, *Note 23
Y352		STAIR #5	94a*	MULTI*	42n/94d	CB-1/TZ-7						Refer to Spec Section 01030, *Note 23
Y452		STAIR #5	94a*	MULTI*	42n/94d	CB-1/TZ-7						Refer to Spec Section 01030, *Note 23
Z027		STAIR#8	94a*	MULTI*	42n/94d	CB-1/TZ-7						Refer to Spec Section 01030, *Note 23

		GENERAL FINISH SCHEDULE NOTES
Note A.		All Hollow Metal Door Frames shall be painted PT-2 (ICI #231) U.N.O.
Note B.		See drawing A1.00 for Key to Materials List.
Note C.		An Asterisk (*) means to refer to the REMARKS Column.
Note D.		"NA" means "Not Applicable". "MCP" means "multi-colored-paint". "UNO" means "unless noted otherwise".
Note E.		Paint all Gyp. Ceilings and Soffits PT-28 U.N.O.
		Not Used
Note G.		Where Inside of Mechanical Equipment is Visible to the eye it shall be painted PT-1.
		Not Used
		Not Used
Note I.		Not Used
Note J.		Ceiling Height Conflicts: Ceiling Plans Supercede Finish Schedule Which Supercedes Interior Elevations.
Note K.		"Multi" Means/Refers to use of "Multiple Colors".
Note L.		Finish Conflicts: Interior Elevations supercede Finish Schedule/A9 Series Drawings Supercede Finish Schedule/Finish Schedule
		Supercedes Reflected Ceiling Plans.
Note M.		Not Used
Note N.		At all rooms where there is exposed (To View) low density spray-on fireproofing (78.1a) and no suspended ceiling
		provide a clear coat sealer over the fireproofing.
Note O.		At All Floor Areas Indicated or Scheduled to Receive Tile Provide Thin Set Installation (TCA-01, Method F-113) For Tile U.N.O.
Note P.		At All Floor Areas Indicated or Scheduled to Receive Tile Where Slab is Recessed Provide Thick Set Installation
		(TCA-01, Method F-121) For Tile.
Note Q.		At Shower Floors Provide Shower Receptor Installation (TCA-01, Method B415 as Modified In The Specifications).
		REMARK NOTES
Note 1.		Paint All Plywood Mounting Material PT-1.
Note 2.		Paint steel stair stringers, steel handrails, steel guardrails and underside of exposed to view metal pans PT-30 UNO.
		Do not paint stainless steel handrails.
Note 3.		Interior Elevations on Drawing A5.01YN Show Scope of Tile and Paint Colors.
		For Tile Colors, Patterns, and Details See Finish Material Plans on Drawings
		A9.07, A9.08 and A9.12.
		PT-7 on 42b at CJT change to PT-1 at 92c1 finish shall be D-2.
Note 4.		Interior Elevations on Drawing A5.03ZE Show Scope of Tile and Paint Colors.
		For Tile Colors, Patterns, and Details See Finish Material Plans on Drawings
		A9.09, A9.10, A9.11 and A9.12.
Note 5.		See Interior Elevations for Extent and Location of Tile. See A9 DWGS for Toilet Room Typical Tile Colors, Patterns,
		Details and Finish Material Plans.
Note 6.		See Drawing A9.19 for Locker Room Typical Tile Patterning, Details and Finish Material Plans.
		At walls of shower stalls, use cementitious backerboard (92b) as substrate for ceramic tile
Note 7.		See Drawings A6.16, A6.17, and A6.21 Thru A6.27 for Stair Plans, Sections, Details, and Finish Materials.
		See Also Note 4/A3.00.
Note 8.		Ceilings at Shower Rooms shall be synthetic plaster (72.4b) on exterior sheathing board (92f2)

Note 9.		See Drawing A7.02 for Ceiling Decorative Painting Requirements.
Note 10.		Paint new and existing surfaces. Do not paint Limestone or Marble. Refinish wood as required for new wood.
Note 11.		Wall Padding to be PD-1, Yellow.
Note 12.		Wall Padding to be PD-2, Gray.
Note 13.		Wall Padding to be PD-3, Black.
Note 14.		At floors of shower stalls ceramic tile is thickset and sloped to drain a minimum of 1/4" per foot.
Note 15.		Not Used
Note 16.		See Drawings A7.6YN and A7.6ZE for paint colors on underside of high roof.
Note 17.		Boxing Rooms: Start 92a1 at 8'-4" above floor datum.
Note 18.		Not Used
Note 19.		Not Used
Note 20.		Paint underside of metal deck prior to installation of suspended ceiling. See also Note 4/A3.00.
Note 21.		Prior to the installation of the suspended acoustical tile ceiling in this room provide one layer of Type X core
		gypsum board (92a1) directly to the underside of metal joists. All electrical conduit, ductwork, sprinkler pipe, etc. shall be located
		between the gypsum board and the suspended ceiling.
Note 22.		Climbing wall Z307: At this room all finishes on the north and west walls, below Elevation 251.00, are by others.
Note 23.		For Terrazzo patterning details finish materials and colors see Drawing A9.00-A9.06.
Note 24.		Not Used
Note 25.		Not Used
Note 26.		Not Used
Note 27.		Not Used
Note 28.		Not Used
Note 29.		Not Used
Note 30.		Floor Marterial color and patterning see Drawing A9.13
Note 31.		Not Used
Note 32.		See Drawing A9.15.
Note 33.		Not Used
Note 34.		Not Used
Note 35.		For Millwork Plastic Lam. Use 62d and 64d PL-11, 64c PL-10.
Note 36.		For Millwork Plastic Lam. Use 62d and 64d PL-5, 64c PL-6.
Note 37.		For Millwork Plastic Lam. Use 62d and 64d PL-8, 64c PL-7.
Note 38.		For Interior Wall Finish/Color Refer to room elevations and building sections for color and location.
Note 39.		Not Used
Note 40.		Not Used
Note 41.		Paint 99b at East Interior Wall PT-14, All others PT-1
Note 42.		Paint 99b at West Interior Wall PT-14, All others PT-1
Note 43.		Refers to use of colored concrete floor stain.
Note 44.		99b is to be color PT-29.
Note 45.		PT-1 General wall color. PT-12 at block (Horizontal stripe). PT-11 at 36" (Vertical Stripe) centered at column lines.
		See room elevations for locations.
Note 46.		PT-1 General wall color. PT-12 at block (Horizontal stripe). PT-10 at 36" (Vertical Stripe) centered at column lines.

SECTION 09155

SWIMMING POOL PLASTER

PART 1 GENERAL

1.1 SUBMITTALS

Government approval is required for submittals with a "GA" designation; submittals having an "FIO" designation are for information only. The following shall be submitted in accordance with Section 01330 SUBMITTAL PROCEDURES:

SD-09 Reports

Test Reports; FIO.

Submit results of domestic water analysis.

SD-13 Certificates

Certificates; FIO.

Submit certificates attesting that materials and products furnished for this project meet all specified requirements..

SD-14 Samples

Plaster Samples; GA.

Submit 12 in. square panel showing color and texture of pool plaster. Finished plaster work shall match the approved sample.

1.2 PRODUCT DELIVERY AND STORAGE

Deliver manufactured materials to site in manufacturers' original unbroken packages or containers bearing manufacturers' name and brand labels. Keep cementitious materials dry until ready to be used and stored off the ground, under cover, and away from damp surfaces.

1.3 JOB CONDITIONS

Apply plaster in swimming pools only when ambient temperature is above 40°F and below 90°F, and protect applied plaster from rapid drying by sun or wind until curing is completed or pool is filled with water.

1.4 DESCRIPTION OF WORK

Work of this Section includes the following:

1. Swimming pool plaster finish.
2. Swimming pool start-up and maintenance.

Related Work Specified Elsewhere:

2. Swimming Pool Sealants and Caulking: Section 07920.
3. Swimming Pool Tile: Section 09380.
4. Swimming Pool General Requirements: Section 13150.

PART 2 PRODUCTS

2.1 MATERIALS

2.1.1 Portland Cement:

ASTM C150, Type I white portland cement.

2.1.2 Hydrated Lime:

ASTM C206, Type S.

2.1.3 Sand for Pool Plaster Finish Coat:

White marble dust uniformly graded within following limits, all passing the No. 30 sieve:

Percentage Retained (by Weight Plus or Minus 2%) on Each Sieve

Sieve Size	Minimum	Maximum
No. 30	0	0
No. 50	40	55
No. 100	70	80
No. 200	80	100

2.1.4 Water:

Clean, fresh, from domestic potable source.

2.2 PROPORTIONS AND MIXING

2.2.1 General

Materials are specified on a volume basis and shall be measured in approved containers which will insure that the specified proportions will be controlled and accurately maintained during the progress of the work. Measuring materials with shovels ("shovel count") is not permitted.

2.2.2 White Marble Pool Plaster Finish Coat:

Mix finish in proportion of one part by volume of white portland cement to not more than two parts by volume of sand (specified white marble dust).

2.2.3 Mixing:

Perform mixing in approved mechanical mixers of the type in which quantity of water can be controlled accurately and uniformly. While mixer is in continuous operation, charge approximately 90% of estimated quantity of water, half of sand, all cement, and the other one-half of the sand into mixer in that sequence and mix thoroughly with remainder of water until mixture is uniform in color and consistency. Avoid excess mixing to prevent hasty solution of cement resulting in accelerated set. Discard plaster which has begun to set before it is used; retempering is not allowed. Do not use any caked or lumpy materials. Completely empty mixer and mixing boxes after each batch is mixed and keep free of old plaster.

PART 3 EXECUTION

3.1 PREPARATION OF SURFACES

Clean base surfaces of projections, dust, loose particles, grease, bond breakers, and foreign matter; make sufficiently rough to provide a strong mechanical bond. Do not apply plaster directly to the surfaces of masonry or concrete that are coated with any membrane-forming curing compound or similar agent until compound or agent is completely removed by sandblasting. Thoroughly wash entire surface with 2,000 psi high pressure water immediately prior to plastering. Wet cementitious base surfaces with a fine fog water spray to produce a uniformly moist condition and check screeds, pool equipment, and accessories for correct alignment before plastering is started. Do not apply plaster to base surfaces containing frost. Install temporary coverings as required to protect adjoining surfaces from staining or damage by plastering operations.

3.2 APPLICATION OF PLASTER

3.2.1 General:

Apply finish plaster to minimum 1/2 inch thickness at any location. Apply finish plaster by hand or machine. If plastering machine is used, control fluidity of plaster to have a sump not exceeding 2-1/2 inches when tested using a 2" by 4" by 6" high slump cone. Do not add additional water to the mix subsequent to determining water content to meet this slump. Perform slump test according to following procedure:

1. Place cone on level, dry, non-absorptive base plate.
2. While holding cone firmly against base plate, fill cone with plaster taken directly from hose or nozzle of plastering machine, tamping with a metal rod during filling to release all air bubbles.
3. Screed off plaster level with top of cone. Remove cone by lifting it straight up with a slow and smooth motion.
4. Place cone in a vertical position adjacent to freed plaster sample using care not to jiggle base plate.
5. Lay straightedge across top of cone being careful not to vibrate cone; measure slump in inches from bottom edge of straightedge to the top of slumped plaster sample

3.2.2 Workmanship:

Apply finish plaster in two coats by "double-back" method with second coat applied as soon as first coat is tamped and initially floated. Apply plaster with sufficient pressure to provide a good bond on bases. Work plaster to screeds at intervals of from 5 feet to 8 feet, or closer as required on curved surfaces. Finish plaster to tolerance of -0 to +1/8 inch in thickness and to 1/8 inch in 8 feet on straight surfaces. Apply smooth trowel finish without waves, cracks, trowel marks, ridges, pits, crazing, discoloration, projections, or other imperfections. Form plaster carefully around curves and angles, well up to screeds. Take special care to prevent sagging and consequent drooping of applications. Produce surfaces free of visible junction marks in finish coat where one day's work adjoins another.

3.2.3 Curing:

Cure plaster with fine fog water spray applied to finish coat as frequently as required to prevent dry-out of plaster. Keep plaster damp until pool is filled. Prevent damage or staining of plaster by troweling or curing.

3.2.4 Patching, Pointing, and Cleaning Up:

Upon completion, cut out and patch loose, cracked, damaged, or defective plaster; patches matching existing plaster in texture, color, and finish, flush with adjoining plaster. Perform pointing and patching of surfaces and plaster work abutting or adjoining any other finish work in a neat and workmanlike manner. If 10 per cent or more of the pools plaster finish is found to be defective, the plaster shall be removed and replaced complete for the entire pool. Remove plaster droppings or spatterings from all surfaces. Leave plaster surfaces in clean, unblemished condition ready for pool filling. Remove protective coverings from adjoining surfaces. Remove rubbish and debris from the site.

3.3 START-UP SPECIFICATIONS

3.3.1 General

Contractor shall employ a qualified water testing agency to analyze the domestic water with which the pool will be filled within 2 weeks of the plaster date, and shall employ a swimming pool experienced water chemistry consultant to determine types and quantities of chemicals required to ensure calcium-balanced water immediately upon the completion of water filling.

1. Have on hand quantities of the chemicals as determined above, plus overage for follow-up treatment. These chemicals, typically including calcium chloride, bicarbonate of soda, and muriatic acid, are in addition to standard chlorine/chlorine products and alkalizer/pH control products required elsewhere

2. The pool shall not be plastered until the filtration system and chlorination system are complete and ready for start-up. Contractor shall notify the Owner in writing of start-up at least two weeks prior to the plaster date. The Contractor is

responsible for supplying bromine/bromine products and alkalizer/pH control products for maintenance of the pool by the automatic treatment systems. Should these automatic treatment systems fail or the Contractor fail to notify the Owner as required, the Contractor shall supply all chemicals required for manual treatment of the pool water.

3. Contractor shall maintain swimming pool for 14 consecutive days in conjunction with the mechanical system operational test. This maintenance period shall be extended with the mechanical system operational test if required per specifications. During this time, brush the entire pool plaster surface daily starting immediately after filling pool for a minimum of 5 days to remove plaster dust, periodically clean grates until no further accumulation of foreign material occurs, and add chemicals as required for acceptable water quality. The pool shall be vacuumed throughout the 14 day period starting no sooner than 5 days after the date of plaster. After successful conclusion of the mechanical system operational testing, clean grates, vacuum pool, and maintain the pools until final acceptance, and leave the pool ready for use.

-- End of Section --

SECTION 09200

LATHING AND PLASTERING

PART 1 GENERAL

1.1 DESCRIPTION OF WORK

Provide lathing and plastering work for partitions, ceilings, soffits, fascias and the like as required, including, but not limited to, framing, suspension systems, furring, beads, control joints, plaster, lath, and curing.

1.2 REFERENCES

The publications listed below form a part of this specification to the extent referenced. The publications are referred to in the text by basic designation only.

AMERICAN SOCIETY FOR TESTING AND MATERIALS (ASTM)

ASTM A 853	(1993) Steel Wire, Carbon, for General Use
ASTM B 164	(1993) Nickel-Copper Alloy Rod, Bar, and Wire
ASTM C 28	(1996) Gypsum Plasters
ASTM C 61	(1995) Gypsum Keene's cement
ASTM C 472	(1993) Physical Testing of Gypsum, Gypsum Plasters and Gypsum Concrete
ASTM C 841	(1997) Installation of Interior Lathing and Furring
ASTM C 842	(1997) Application of Interior Gypsum Plaster
ASTM C 847	(1995) Metal Lath
ASTM C 1002	(1996a) Steel Drill Screws for the Application of Gypsum Panel Products or Metal Plaster Base

1.3 SUBMITTALS

Government approval is required for submittals with a "GA" designation; submittals having an "FIO" designation are for information only. The

following shall be submitted in accordance with Section 01330 SUBMITTAL PROCEDURES:

SD-01 Data

Plastering Materials and Accessories; GA.

Manufacturer's pre-printed descriptive data, catalog cuts, and installation instructions for plastering materials and accessories.

SD-04 Drawings

Lath and Plaster; FIO.

Drawings including installation details.

SD-13 Certificates

Gypsum Plaster; GA

One 36 inch square sample panel of each specified finish.

1.4 QUALIFICATIONS

Manufacturer shall specialize in manufacturing the types of material specified, and shall have a minimum of 5 years of documented successful experience. Applicator shall specialize in the type of lath and plaster work required to meet requirements, with a minimum of 3 years of documented experience.

1.5 DELIVERY, STORAGE AND HANDLING

Materials shall be delivered to project site in the original containers bearing the name of manufacturer, contents, and brand name. Plaster, cement, and lime shall be stored off the ground under weathertight cover and away from sweating walls and other damp surfaces until ready for use. Accessories shall be stored off the ground in a weathertight structure for protection. Damaged or deteriorated materials shall be removed from project site.

1.6 ENVIRONMENTAL CONDITIONS

A temperature between 40 degrees F and 80 degrees Fshall be evenly maintained in the building for a period of not less than 1 week prior to application of plaster, and for a period of at least 1 week after the gypsum plaster is set, in accordance with ASTM C 842. Interior spaces shall be ventilated in accordance with ASTM C 842 immediately after applying plaster.

PART 2 PRODUCTS

2.1 METAL WALL FRAMING AND FURRING

Metal framing and furring shall be as specified under Section 09250 GYPSUM

WALLBOARD.

2.2 CEILING SUSPENSION SYSTEMS, FRAMING AND FURRING

Ceiling suspensions system, framing and furring shall be as specified under Section 09250 GYPSUM WALLBOARD.

2.3 TRIM, MOLDINGS, AND ACCESSORIES

2.3.1 Fastenings

Tie wire, rings, and other fastenings shall be corrosion-resisting stainless steel conforming to ASTM A 580, composition 316, Condition A, or nickel-copper alloy conforming to ASTM B 164, annealed condition. Walls, partitions, and other vertical surfaces not incorporated in ceiling construction may be erected with soft, annealed steel conforming to ASTM A 853.

2.3.1.1 Tie Wire

Tie wire for securing metal lath to supports, and for lacing shall be not less than No. 18 SWG diameter. Tie wire for all other applications shall be not less than No. 16 SWG diameter.

2.3.2 Arch, Flexible Corner Beads

Flexible corner beads shall be fabricated of aluminum, with minimum 1-1/4 inch wide flanges and 1/8 inch thick bead, designed to bend without buckles, kinks, or breaks in the nose.

2.3.3 Expanded Flange Corner Beads

Expanded flange corner beads shall be fabricated of aluminum, with 2-1/2 inch wide flanges and 1/8 inch wide bead.

2.3.4 Bullnose Corner Beads

Bullnose corner beads shall be fabricated of aluminum, with 2-1/2 inch wide flanges and 3/4 inch bead.

2.3.5 Cornerites

Cornerites shall conform to ASTM C 847. Cornerites shall be fabricated of galvanized expanded metal lath to form an angle of at least 100 degrees, with outstanding legs of not less than 2 inches.

2.3.6 Striplath

Striplath shall conform to ASTM C 847. Striplath shall be fabricated of galvanized steel sheet, 2.5 pounds per square yard.

2.3.7 Base or Parting Screed

Base screeds shall be fabricated of 0.0210 in galvanized steel, 1/2 inch

depth, with not less than 2 inch wide expansion flanges.

2.3.8 Casing Beads

Casing beads shall be fabricated of galvanized 0.0276 inch thick steel 3/4 inch depth, 1 inch wide expansion wings, front edge of face flange shaved for intended use, back slightly arched to provide a spring effect.

2.3.9 Control Joints

Control joints shall be designed for expansion and contraction of plaster work due to thermal exposure. Control joints shall be fabricated of 0.0217 inch thick galvanized steel for interior dry locations, or 0.030 inch thick zinc alloy for interior wet locations, with perforated or expanded-metal wings.

2.3.10 Reveal Molding

Reveal moldings shall be fabricated of aluminum. Reveal molding shall be size and shape as shown.

2.3.11 Screws

Self-drill steel screws shall conform to ASTM C 1002. Screws shall be Type S for use with steel framing and Type W for use with wood members.

2.4 METAL LATH

2.4.1 Expanded Metal Lath

Expanded metal lath shall conform to ASTM C 847. Lath shall be self-furring lath over solid (CMU) substrates, and flat rib lath over stud framing and suspensions systems; expanded from cold-rolled carbon sheet steel of commercial quality, coated with rust-inhibitive paint after fabrication, 3.4 pounds per square yard. Provide lath with backing for use at stud framing or furring locations.

2.5 GYPSUM LATH AND VENEER PLASTER BASE

2.6 GYPSUM PLASTER

2.6.1 Ready-Mixed Gypsum Plaster

Ready-mixed plaster for use over metal lath shall conform to ASTM C 28 for the following: ready-mixed plaster with sand aggregate.

2.6.2 Gypsum Gauging Plaster for Finish Coats

Gypsum gauging plaster shall conform to ASTM C 28. Keene's quick-set cement for finish coats shall conform to ASTM C 61.

2.7 WALL OPENING FRAMES

Steel frames for wall openings for doors, pass-through openings, and access

panels shall be as specified in Section 08110 STEEL DOORS AND FRAMES or Section 05500 MISCELLANEOUS METAL. Wood frames, wood bucks, and blocking for wall openings for doors, pass-through openings, and access panels shall be as specified in Section 06100 ROUGH CARPENTRY.

PART 3 EXECUTION

3.1 PREPARATION

Project conditions shall be verified as ready to receive the work. Field measurements shall be verified for compliance with manufacturer's published recommendations. Beginning of installation means installer accepts existing conditions.

3.2 WALL FRANMING AND FURRING INSTALLATION

Metal framing and furring installation shall be as specified under Section 09250 GYPSUM WALLBOARD.

3.3 CEILING SUSPENSION SYSTEMS, FRAMING AND FURRING INSTALLATION

Ceiling suspensions system, framing and furring installation shall be as specified under Section 09250 GYPSUM WALLBOARD.

3.4 LATHING INSTALLATION

3.4.1 Metal Lath on Vertical Surfaces

Metal lath shall be applied with the long dimension across the supports, with true even surfaces, and without sags or buckles in accordance with ASTM C 841. Metal lath on vertical surfaces shall be oriented to provide maximum mechanical bond with plaster and the upper sheet shall be attached to overlap the lower sheet. When paper-backed lath is used, the upper sheet shall be attached to overlap the lower sheet. The lath shall be secured to supports at intervals not exceeding 6 inches. Nails or staples shall be used for securing lath to wood supports. Tie wires, rings, clips, or other approved fasteners having equivalent holding power of the tie wires shall be used for securing the plaster base to metal supports and to concrete or masonry. Side-laps or junction of sides of plaster base shall be tied or otherwise secured at intervals not exceeding 9 inches between supports, in addition to being secured to supports.

3.4.2 Metal Lath on Ceilings

Metal lath on ceilings shall be in accordance with ASTM C 841. Lath on unrestrained ceilings shall not be turned down at junction with wall or tied to wall lath or furring. Lath on restrained ceilings shall be turned down at junction with wall, or shall be applied to cornerite or corner bead.

3.4.3 Side and End Laps

Side and end laps of metal plaster bases shall be performed in accordance with ASTM C 841 for flat lath and ribbed lath.

3.4.4 Chases and Recesses

Chases and recesses shall be lathed for plastering. Openings over 12 inches wide shall be bridged with furring channels spaced 12 inches on centers. Openings 12 inches wide and less do not need to be bridged. Lath shall extend 3 inches beyond the edges of opening. Lath shall be securely fastened by nailing or tying. Lath shall be securely fastened with nails, screws or wire ties.

3.5 OPENINGS

Reinforcement shall be provided at corners of openings in plastered areas extending 12 inches or more in any dimension by securing striplath diagonally at corners. Striplath shall be at least 6 inches wide by 16 inches long. Shorter lengths shall be used to preclude lapping striplath. Striplath shall be secured to lathing without extending fastenings into or around supporting members. Where plaster is applied directly to concrete or masonry surfaces, striplath shall be secured to the concrete or masonry.

3.5.1 Steel Frames

Steel frames shall be securely attached through built-in anchors to the nearest stud on each side of opening with tie wire, bolts, screws, or welding or bracing where bracing is specified. Steel frames shall be grouted solid with plaster grout and a groove shall be formed within the frame returns to receive lath and plaster.

3.5.2 Wood Frames

Wood frames shall be securely attached to the nearest stud in frame partitions and to wood bucks built into the solid partition. Sizes shall be as indicated for each type and size of wall or partition.

3.6 INSTALLATION OF TRIM, MOLDINGS, AND ACCESSORIES

Trim, moldings, and accessories shall be installed in standard lengths level and plumb to straight lines and as indicated on drawings. Fastenings shall be spaced not over 12 inches on centers for single-flanged accessories and not over 24 inches on centers on each flange of double-flanged accessories. Items shall be mitered or coped at corners, or prefabricated corners shall be used. Joints in straight runs shall be formed with splice or tie plates.

3.6.1 Base Screeds

Base screeds shall be installed approximately 3 inches above finished floor elevation unless indicated otherwise.

3.6.2 Corner Beads

Corner beads shall be installed in standard lengths at external plastered corners, and shall be secured to furring members or supports.

3.6.3 Cornerites

Cornerites shall be installed at internal angles formed by abutting surfaces of gypsum lath or metal lath not turned down at horizontal corners or returned around vertical corners. Cornerites shall be secured to lathed surfaces. Cornerites shall be secured to concrete or masonry where plaster is applied directly to concrete or masonry surfaces. Cornerites shall not be installed at unrestrained ceilings.

3.6.4 Casing Beads

Casing beads shall be installed at the joints of dissimilar base materials in the same plane and at exposed edges of plaster including junctions of walls and ceilings except that beads shall not be installed at restrained ceilings abutting plastered surfaces. At the perimeter of unrestrained suspended ceilings, the casing bead shall be secured to the ceiling to provide a 3/8 inch opening between the abutting surfaces. The opening shall be sealed prior to plastering with sealant as specified in Section 07900 JOINT SEALING.

3.6.5 Expansion and Control Joint Beads

Expansion joint beads shall be installed as control joints in plaster work at the locations indicated. Plaster base shall not be run continuous through control joints. Additional supports shall be installed as required to support the beads.

3.6.6 Trim

Trim shall be installed where indicated and as required to complete the plaster work.

3.7 PLASTER THICKNESS AND SURFACE EVENNESS

Plaster thickness and surface evenness shall be controlled by grounds or screeds of metal, wood, or plaster. Wood grounds are specified under Section 06100 ROUGH CARPENTRY. Plaster thickness shall be as shown.

3.7.1 Grounds and Screeds

Grounds shall be used for securing trim items, and for finished corners and terminations. Screeds shall be installed for base screeds when wood or metal grounds are not required. Temporary screeds shall be installed when permanent screeds or grounds cannot be used. On completion of approved base coats, temporary screeds shall be removed and voids immediately filled with plaster.

3.7.2 Plaster Screeds

Plaster screeds shall be used within the plastered areas to supplement wood and metal grounds and screeds.

3.8 PLASTER GROUT

Plaster grout shall be scratch-coat material mixed to a non-fluid

consistency. Plaster grout shall be used to fill steel door frames and partition bases. Grout shall be placed and grooved prior to gypsum lathing operations. Heads and jambs of frames shall be filled solid with grout, and 1/2 inch deep grooves shall be formed in the grout, while plastic, to receive gypsum lath.

3.9 PROPORTIONS AND MIXING

3.9.1 Prepared-Gypsum Finish

Prepared-gypsum finish shall be mixed with water to the proper consistency in accordance with manufacturer's published instructions. Prepared-gypsum finish shall have a minimum compressive strength of not less than 300 psi when tested in accordance with ASTM C 472. Prepared gypsum finish shall be used only over sanded base coats.

3.9.2 Keene's Cement Finish

Keene's cement finish shall be mixed in the proportions of 100 pounds of Keene's cement to 25 pounds, dry weight, of hydrated lime. The mix shall be approximately equivalent to one 100 pound bag of Keene's cement to one-half 50 pound bag of hydrated lime or 50 pounds lime putty or 4-1/2 gallons lime putty. Subject to approval, 10 pounds of fine white sand may be added to the above mix. When mixing mechanically, the water shall be put into the mixer first, then the lime, the white sand if used, and finally the Keene's cement.

3.9.3 High-Strength Gypsum Finish

High-strength gypsum finish shall be mixed by dry weights in proportions of 100 pounds of high-strength gypsum gauging plaster to 100 pounds of hydrated lime or 200 pounds of lime putty. Gypsum gauging plaster for high-strength finish coat shall be mixed with lime putty in accordance with ASTM C 28. Gauging plaster shall have a compressive strength not less than 3000 psi when tested in accordance with ASTM C 472. Factory-mixed gypsum finishing plasters shall equal or exceed the performance requirements of job-mixed finishing plasters.

3.10 MACHINE APPLICATION

A plastering machine may be used for the application of scratch and brown coats. Plaster for machine application shall be a special plaster compounded and packaged by the manufacturer for this purpose. Slump cone equipment shall be present on the jobsite when base-coat plastering begins, and until completion. Testing of the mix shall be the responsibility of the Contractor, but equipment shall be available for use by the Government. Additional water shall not be added to the mix to allow pumping through extended hose lines to the plastering nozzle. The amount of water added to each batch of plaster shall be that quantity which results in a plaster slump of not more than 3 inches for gypsum and 2-1/2 inches for portland cement using a standard plaster slump cone or 6 inches for gypsum and 5 inches for portland cement using a concrete slump cone. Application of plaster shall conform to the provisions of ASTM C 842.

3.11 QUALITY CONTROL

Fluidity or stiffness of plaster shall be tested with a standard 2 x 4 x 6 inch plaster slump testing cone or by a 4 x 8 x 12 inch concrete slump testing cone. Method of making slump test shall be as follows:

a. Place cone on center of dry base plate located on a level, firm surface. Hold cone tightly against plate.

b. Fill the cone with plaster obtained from the hose or nozzle, without air on the nozzle, puddling with tamping rod during the operation to eliminate air bubbles or voids.

c. Screed plaster level with top of cone.

d. Lift cone straight up from base plate in a slow and uniform motion, and place it on the base plate next to plaster sample.

e. Lay a straightedge across top of cone, being careful not to disturb or jostle the plate, and measure the slump in inches from the bottom of the straightedge to the top of the plaster sample.

3.12 APPLICATION OF FINISHES

The finish coat shall extend behind all projecting bases, wainscots, casework, structural-glass wall finish, cabinets, chalkboards, tackboards, bulletin boards, acoustic treatments, fixed equipment, and the like. Plaster shall have a smooth-trowel finish.

3.12.1 Interior Gypsum Plaster

Application of interior gypsum plaster (full thick) shall be in accordance with ASTM C 842. Nominal plaster thickness shall be 1 inch.

3.12.2 Prepared-Gypsum Finish

Prepared-gypsum finish may be used in lieu of lime-putty finish, and shall be applied in accordance with the manufacturer's printed directions.

3.12.3 Keene's Cement Finish and High Strength Gypsum-Plaster Finish

Keene's cement finish and high-strength gypsum-plaster finish shall be applied in accordance with ASTM C 842. Where indicated on the finish schedule, either may be used at the Contractor's option. Neither finish shall be used over lightweight-aggregate-plaster or portland-cement-plaster base coats. The finish coat shall be 1/16 to 1/8 inch thick, and troweled smooth and free from blemishes and irregularities.

3.13 PATCHING

Plaster showing oversanding, cracks, blisters, pits, checks, discoloration or other defects is not acceptable. Defective plaster work shall be removed and replaced with new plaster at the expense of Contractor. Patching of defective work will be permitted only when approved by the

Contracting Officer. Patching shall match existing work in texture and color.

3.14 SAMPLES OF COMPLETED WORK

Samples of completed work may be taken by the Contracting Officer at any time for laboratory inspection and tests to determine conformance.

-- End of Section --

SECTION 09215

PLASTER PATCHING

PART 1 GENERAL

1.1 DESCRIPTION OF WORK

Provide plaster patching at existing plaster walls, ceilings, soffits, fascias and the like as directed by the Contracting Officer, including, but not limited to, removal of existing plaster systems and integration of framing systems, suspension systems, lath, plaster and finishing to provide surfaces to match existing adjacent original surfaces.

The work of this Section shall not include plaster patching required to integrate new work into the existing construction or new plaster work. Such work shall be provided in accordance with the specifications including Section 01120, ALTERATION PROJECT PROCEDURES, Section 02220, DEMOLITION, and Section 09200, LATHING AND PLASTERING.

1.2 REFERENCES

The publications listed below form a part of this specification to the extent referenced. The publications are referred to in the text by basic designation only.

AMERICAN SOCIETY FOR TESTING AND MATERIALS (ASTM)

ASTM C 472	(1993) Physical Testing of Gypsum, Gypsum Plasters and Gypsum Concrete
ASTM C 842	(1997) Application of Interior Gypsum Plaster
ASTM C 843	(1996) Application of Gypsum Veneer Plaster
ASTM C 847	(1995) Metal Lat

1.3 SUBMITTALS

Government approval is required for submittals with a "GA" designation; submittals having an "FIO" designation are for information only. The following shall be submitted in accordance with Section 01330 SUBMITTAL PROCEDURES:

SD-01 Data

Plastering Materials and Accessories; GA.

Manufacturer's pre-printed descriptive data, catalog cuts, and installation

instructions for plastering materials and accessories.

SD-04 Drawings

Lath and Plaster; FIO.

Drawings including installation details.

SD-13 Certificates

Gypsum Plaster; FIO.

Certification indicating that factory-mixed plaster provides a minimum compressive strength of not less than 1000 psi when tested in accordance with ASTM C 472.

SD-14 Samples

Gypsum Plaster; GA

One 36 inch square sample panel of each specified finish.

1.4 COORDINATION

Work under this Section shall be properly coordinated with the work of other Sections to assure the steady progress of all the work of the Contract. Obtain complete information regarding wall and ceiling mounted fixtures, grilles, registers, equipment, accessories, etc., to be used on the work from other trades. In no case shall work of other Sections be concealed until it has been inspected.

1.5 QUALITY ASSURANCE

Specification standards of ASTM C 842, ASTM C 843, and ASTM C 847 which are applicable to work of this Section are hereby included in and made a part of this Section.

Mock-Up Installation: Provide a mock-up sample repair of one area of plaster needing repair.

1.6 PRODUCT DELIVERY, STORAGE, AND HANDLING

All manufactured materials shall be delivered to site in original packages or containers bearing manufacturer's names and brand names, type of material, and contents.

Store packaged materials indoors or under cover, on raised platforms, with adequate protection at all times against damage from all sources.

1.7 BASIS OF PAYMENT

Payment for the provision of plaster patching shall be included in the contract price as indicated in the "Price Schedule" and in section 01025 MEASUREMENT AND PAYMENT. No payment will be made for plaster patching work

not complying with the requirements of the Specifications.

Payment in accordance with the above paragraph shall constitute full compensation for removal and disposal of all materials, furnishing, delivering, handling, and/or installing (as applicable) all material, labor and equipment necessary to meet contract requirements applicable to plaster patching.

1.8 MEASUREMENT

Measurement shall be in accordance with the requirements of Section 01025 MEASUREMENT AND PAYMENT.

If any part of the work is carried beyond the depths and dimensions indicated by the Contracting Officer and the dimensions indicated on the Drawings or called for by the Specifications, the Contractor at his own expense shall provide the additional labor and materials necessary to properly incorporate the required work. Such additional labor and materials shall be approved by the Contracting Officer.

PART 2 PRODUCTS

2.1 GYPSUM PLASTER

Provide gypsum plaster materials in conformance with Section 09200 PLATHING AND PLASTERING.

2.2 METAL LATH, TRIM, MOLDINGS, AND ACCESSORIES

Provide metal lath, trim, moldings, and accessory materials in conformance with Section 09200 PLATHING AND PLASTERING

PART 3 EXECUTION

3.1 GENERAL INSTALLATION REQUIREMENTS

All work shall conform to the printed specifications and installation instructions of each of the manufacturers, applicable requirements of the referenced specification standards, and to the requirements of the governing laws and building code.

Inspect job conditions and related work and report to the Contracting Officer in writing, all conditions interfering with the proper carrying out of the plaster patching work. Commencement of work will constitute acceptance of conditions as being proper to satisfactorily receive the work of this Section.

Make all changes and adjustments in existing lath and plaster substrate work as required to accommodate the plaster patching work, providing all cutting and patching of existing lathing and plastering work as required.

Lath and plaster patching work shall be erected, rigidly supported and securely fastened in place, in such manner that plumb, level, and true finished lines and surfaces will result in the finished work, and that new

work will blend into existing work without visible evidence of patching.

Substrates to receive lath and plaster patching work shall be clean and free of defects.

In cold and/or inclement weather, no lathing and plaster patching work shall be started or applied until all windows and door openings are adequately fitted with temporary covers, or until the permanent installations are in place, so that a temperature range of not less than 60 degrees F. can be maintained during and up to completion of the lathing and plaster patching work.

In dry, warm weather control ventilation so as not to cause too rapid drying of the applied plaster materials.

3.2 PREPARATION

Prepare existing plaster substrates for patching by cutting and removing damaged portions of existing work back to sound substrates.

1. Provide adequate temporary support as necessary to assure integrity of affected portion of Work.

2. Provide devices and methods to protect other portions of Project from damage.

3. Provide protection from elements for that portion of the Project which may be exposed by cutting and patching work.

Execute cutting of existing lath and plaster using methods that will prevent damage to other work, and will provide proper surfaces to receive installation of patches and repairs.

a. In general, where mechanical cutting is required, cut work with sawing and grinding tools, not with hammering and chopping tools.

b. The use of hammering and chopping tools shall not be permitted without specific approval of the Contracting Officer. The Contractor shall assume that no hammering or chopping tools shall be permitted."

Restore existing work which has been cut or removed; install new lath and plaster to provide completed Work in accordance with requirements of Contract Documents.

Patch with seams which are durable and as invisible as possible.

Restore exposed finishes of patched areas; and, where necessary extend finish restoration onto retained work adjoining, in a manner that will eliminate evidence of patching.

Refinish entire surfaces as necessary to provide an even finish to match adjacent finishes:

a. For continuous surfaces, refinish to nearest intersection.

3.3 LATHING INSTALLATION

Install metal lath with long dimension perpendicular to existing supports by use of 18 gauge galvanized wire ties spaced 6 in. on center. Join ends of lath sheets at existing supports or solid substrates only, lap at least one inch, and wire tie to existing supports or substrates. Lap sides of lath and wire tie at 9 in. on center. Install trim and corner bead accessories as required.

3.4 PLASTER INSTALLATION

Gypsum Plaster Installation: Install gypsum plaster systems in conformance with Section 09200, LATHING AND PLASTERING.

Finish Coat Application: Apply over a base that has set and is surface dry. Finish coat shall be scratched in thoroughly, laid on well. Allow to draw a few minutes, then finish to match existing.

3.4 PROTECTION AND COMPLETION

During lath and plaster patching work, protect existing substrates and finishes to remain, and the work of other trades against soiling and damage by the exercise of reasonable care and precautions. Repair or replace any work so damaged or soiled.

-- End of Section --

SECTION 09250

GYPSUM WALLBOARD

PART 1 GENERAL

1.1 REFERENCES

The publications listed below form a part of this specification to the extent referenced. The publications are referred to in the text by basic designation only.

AMERICAN SOCIETY FOR TESTING AND MATERIALS (ASTM)

ASTM A 580/A 580M	(1995a) Stainless Steel Wire
ASTM A 853	(1993) Steel Wire, Carbon, for General Use
ASTM C 36	(1997) Gypsum Wallboard
ASTM C 473	Physical Testing for Humidified Deflection
ASTM C 475	(1994) Joint Compound and Joint Tape for Finishing Gypsum Board
ASTM C 630/C 630M	(1996a) Water-Resistant Gypsum Backing Board
ASTM C 645	(1996a) Nonstructural Steel Framing Members
ASTM C 754	(1997) Installation of Steel Framing Members to Receive Screw-Attached Gypsum Panel Products
ASTM C 840	(1996) Application and Finishing of Gypsum Board
ASTM C 1002	(1996a) Steel Drill Screws for the Application of Gypsum Board or Metal Plaster Bases
ASTM C 1047	(1995) Accessories for Gypsum Wallboard and Gypsum Veneer Base

GYPSUM ASSOCIATION (GA)

GA 216	(1996) Application and Finishing of Gypsum Board
GA 600	(1997) Fire Resistance Design Manual

UNDERWRITERS LABORATORIES (UL)

UL Fire Resist Dir (1998) Fire Resistance Director

1.2 SYSTEM DESCRIPTION

1.2.1 Fire-Rated Construction

Joints of fire-rated gypsum board enclosures shall be closed and sealed in accordance with UL test requirements or GA requirements, and as required to meet pressurization requirements. Penetrations through rated partitions and ceilings shall be sealed tight in accordance with tested systems. Fire ratings shall be as indicated.

1.3 SUBMITTALS

Government approval is required for submittals with a "GA" designation; submittals having an "FIO" designation are for information only. The following shall be submitted in accordance with Section 01330 SUBMITTAL PROCEDURES:

SD-04 Drawings

Steel Framing; FIO. Control Joints; FIO. Fire-Resistant Assemblies; FIO.

Drawings and installation details for ceiling framing, furring, special wall framing, and framed openings in walls and ceilings.

SD-13 Certificates

Gypsum Wallboard; FIO. Water-Resistant Gypsum Board; FIO. . Steel Framing ; FIO. Fire-Rated Gypsum Board; FIO.

Certificates stating that the steel framing and gypsum wallboard meet the specified requirements.

SD-14 Samples

1.4 QUALIFICATIONS

Manufacturer shall specialize in manufacturing the types of material specified and shall have a minimum of 5 years of documented successful experience. Installer shall specialize in the type of gypsum board work required and shall have a minimum of 3 years of documented successful experience.

1.5 DELIVERY, STORAGE AND HANDLING

Materials shall be delivered in original containers bearing the name of manufacturer, contents, and brand name. Materials shall be stored off the ground in a weathertight structure for protection. Gypsum boards shall be stacked flat, off floor and supported to prevent sagging and warpage. Adhesives and joint materials shall be stored in accordance with manufacturer's printed instructions. Damaged or deteriorated materials

shall be removed from jobsite.

1.6 ENVIRONMENTAL CONDITIONS

Environmental conditions for application and finishing of gypsum board shall be in accordance with ASTM C 840. During the application of gypsum board without adhesive, a room temperature of not less than 40 degrees F shall be maintained. During the application of gypsum board with adhesive, a room temperature of not less than 50 degrees F shall be maintained for 48 hours prior to application and continuously afterwards until completely dry. Building spaces shall be ventilated to remove water not required for drying joint treatment materials. Drafts shall be avoided during dry hot weather to prevent materials from drying too rapidly.

PART 2 MATERIALS

2.1 METAL FRAMING

2.1.1 Studs

Studs shall conform to ASTM C 645. Studs shall be C-shaped, roll formed steel with minimum uncoated design thickness of 20 gauge made from G40 hot-dip galvanized coated sheet.

2.1.2 Runner Tracks

Floor and ceiling runner tracks shall conform to ASTM C 645. Tracks shall be prefabricated, U-shaped with minimum 1 inch flanges, unpunched web, thickness to match studs, made from G40 hot-dip galvanized coated sheet.

2.1.3 Deflection Tracks

Provide special shaped tracks and deflection tracks as indicated or as required to accommodate structural deflections of up to 1-1/4 inch.

2.1.4 Steel Sheet for Blocking

Provide minimum 20 gauge galvanized steel sheet for blocking and strapping, in conformance with ASTM A 446, G40.

2.1.5 SUSPENDED CEILING FRAMING

Suspended ceiling framing system shall have the capability to support the finished ceiling, light fixtures, air diffusers, and accessories. The suspension system shall have a maximum deflection of L/240 of clear span. Carrying channels shall be formed from minimum 0.0548 in thick cold-rolled steel, 1-1/2 x 3/4 inch. Furring members shall be formed from cold-rolled steel, 7/8 x 2-9/16 inch. Carrying channels and furring members shall be made from hot-dip galvanized coated sheet.

2.2 GYPSUM BOARD

Gypsum board shall have square-cut ends, tapered or beveled edges and shall be maximum possible length. Gypsum board thickness shall be as shown.

2.2.1 Standard Gypsum Board for Walls

Regular gypsum board shall conform to ASTM C 36, and shall be 48 inches wide.

2.2.2 Special Gypsum Boards for Ceilings

Special gypsum board for ceilings shall be 1/2 inch thick and shall conform to ASTM C 36, and shall exhibit resistance to sag greater than a 5/8 inch regular gypsum wallboard when tested according to ASTM C 473.

2.2.3 Gypsum Board Base for Multi-Layer Applications

Provide gypsum base in conformance to ASTM C 36, and shall be 48 inches wide.

2.2.4 Fire-Rated Gypsum Board

Fire-rated gypsum board shall conform to ASTM C 36, and shall be Type X or Type C as required, 48 inches wide.

2.2.5 Water-Resistant Gypsum Board

Water-resistant gypsum board shall conform to ASTM C 630/C 630M, with water-resistant paper faces, paintable surfaces, and shall be 48 inch width and maximum permissible length. Provide Type X, fire rated panels at walls indicated to be of fire resistive construction or part of fire rated assemblies.

2.2.6 Shaftwall Liner Panel

Shaftwall liner panel shall conform to UL listing. Liner Panel shall be specifically manufactured for cavity shaftwall system, with water-resistant paper faces, bevel edges, single lengths to fit required conditions, 1 inch thick, by 24 inches wide.

2.2.7 Exterior and Interior Gypsum Sheathing Board

Gypsum Sheathing: Provide fiber-glass faced gypsum sheathing board with a silicone treated water-resistant core, as manufactured in conformance with ASTM C 79 and as follows:

1. Grade: W, water resistant core, except provide Type X fire-resistant where indicated.
2. Thickness: 1/2 in., unless otherwise indicated; provide 5/8 in. for fire-resistant type.
3. Size: 4 ft.-0 in. x 8 ft.-0 in.
4. Face: Manufacturer's standard fiberglass face.

2.2.8 Hi-Abuse Resistant Wall Board

Provide Gold-Bond Fire Shield Hi-Abuse Wallboard Type X panels as manufactured by National Gypsum Co., or Fiberock Brand Abuse Resistant

Gypsum Fiber Panels as manufactured by United States Gypsum Corp.; or approved equal; in 5/8 inch thickness.

2.2.9 Hi-Impact Resistant Gypsum Board

Provide Gold-Bond Fire Shield Type X Hi-Impact 2000 HA Wallboard panels as manufactured by National Gypsum Co.; or Fiberock Brand VHI (Very High Impact) Abuse Resistant Gypsum Fiber Panels as manufactured by United States Gypsum Corp.; or approved equal; in 5/8 inch thickness.

2.2.10 Combination Hi-Abuse/Hi-Impact Resistant Gypsum Board

Provide Gold-Bond Fire Shield Type X Hi-Impact 2000 Wallboard panels as manufactured by National Gypsum Co.; or Fiberock Brand VHI (Very High Impact) Abuse Resistant Gypsum Fiber Panels as manufactured by United States Gypsum Corp.; or approved equal; in 5/8 inch thickness.

2.2.11 Cementitious Backer Board for Ceramic Tile

Cementitious backer units shall comply with ANSI A118.9.

2.3 TRIM, MOLDINGS, AND ACCESSORIES

2.3.1 Taping and Embedding Compound

Taping and embedding compound shall conform to ASTM C 475. Compound shall be specifically formulated and manufactured for use in embedding tape at gypsum wallboard joints and fastener heads, and shall be compatible with tape and substrate.

2.3.2 Finishing or Topping Compound

Finishing or topping compound shall conform to ASTM C 475. Compound shall be specifically formulated and manufactured for use as a finishing compound for gypsum board.

2.3.3 All-Purpose Compound

All-purpose compound shall be specifically formulated and manufactured to use as a taping and finishing compound, and shall be compatible with tape and substrate.

2.3.4 Joint Tape

Joint tape shall conform to ASTM C 475 and shall be as recommended by gypsum board manufacturer.

2.3.5 Trim, Control Joints, Beads, Stops and Nosings

Items used to protect edges, corners, and to provide architectural features shall be in accordance with ASTM C 1047, and shall be of galvanized steel, minimum 0.012 inch thick before coating, except as noted below. No paper or plastic (PVC) containing trims shall be used. Provide extended flanges to permit fastening through boards to framing. Control joints shall be

single piece with removable filler strip.

Provide trims of extruded aluminum, 6063-T5 alloy equal with factory-primed finish suitable for field finishing with finish systems required for gypsum wallboard surfaces. Trims shall have o.875 inch tapered flanges suitable for floating into finished wall surfaces. Flanges shall have staggered holes for screw application through gypsum wallboard to underlying framing and multiple continuous formed grooves or ridges to increase bonding between trim and finishing or topping compound.

Outside right angle corner trim shall be one piece aluminum extrusions with a 0.10 inch minimum extrusion thickness and a face width of 1.25 inch along each face of corner exclusive of flanges. Flanges shall be provided along both faces of corner. Edge of face width shall form a stop/screed for finishing or topping compound.

Reveal trim shall be one piece aluminum extrusions forming a 1 inch wide by 15/32 inch deep channel with a 0.0625 inch minimum extrusion thickness. Flanges shall extend out from each side of channel. Edges of channel at flanges shall form a stop/screed for finishing or topping compound.

2.4 FASTENINGS

2.4.1 Screws

Screws shall conform to ASTM C 1002. Screws shall be self-drilling and self-tapping steel, Type G for gypsum board to gypsum board and Type S for wood or light-gauge steel framing.

2.4.2 Hangers

Suspended ceiling runner channel hangers shall be soft, annealed galvanized steel wire not less than No. 8 SWG, conforming to ASTM A 853.

2.4.3 Tie Wire and Other Fastenings

Tie wire, and other fastenings shall be corrosion-resisting stainless steel conforming to ASTM A 580/A 580M, composition 316, Condition A, except that walls, partitions, and other vertical surfaces not incorporated in ceiling construction may be erected with soft, annealed steel conforming to ASTM A 853.

2.4.3.1 Tie Wire

Tie wire shall be not less than No. 16 SWG.

2.5 VAPOR BARRIER

Reinforced-Polyethylene Vapor Retarders: 2 outer layers of polyethylene film laminated to an inner reinforcing layer consisting of either nylon cord or polyester scrim and weighing not less than 25 lb/1000 sq. ft. (12 kg/100 sq. m), with maximum permeance rating of 0.0507 perm (2.9 ng/Pa x s x sq. m).

Fire-Retardant, Reinforced-Polyethylene Vapor Retarders: At fire-rated assemblies, provide 2 outer layers of polyethylene film laminated to an inner reinforcing layer consisting of either a nonwoven grid of nylon cord or polyester scrim and weighing not less than 22 lb/1000 sq. ft. (10 kg/100 sq. m), with maximum permeance rating of 0.1317 perm (7.53 ng/Pa x s x sq. m), and flame-spread and smoke-developed indices of not more than 5 and 60, respectively.

2.6 ACOUSTICAL BATT INSULATION

Acoustical Blanket/Batt Insulation: Indicated thicknesses by 16-1/8 in. and 24-1/8 in. wide, as appropriate, equal to "Fiberglas Unfaced Acoustical Insulation", manufactured by Owens-Corning Fiberglas Corp., or approved equal.

PART 3 EXECUTION

3.1 INTERIOR WALL FRAMING

Steel framing and furring members shall be provided in accordance with ASTM C 754. Members shall be in alignment with spacings not to exceed the maximum spacings indicated on drawings. Runners shall be aligned accurately at the floor and ceiling and securely anchored.

Provide deflection tracks at head of all partitions. Deflection capabilities shall be as indicated on Drawings.

Installation of Steel Studs: Provide one-piece steel studs without splices at spacing not to exceed 16 in. o.c. (or other spacing indicated) and located at abutting construction and at the internal apex of corners. Provide additional studs at corner conditions, frame jambs, etc..

Position steel studs vertically engaging both floor and top runners. Anchor studs located adjacent to door and fixed glass frames, partition intersections, corners, and open partition ends, to the floor and ceiling runner flanges by positive screw engagement with 3/8 in. Type S pan head screws or by locking the studs with metal lock fasteners and to the ceiling runner flanges by screw engagement. Allow for relief of roof or ceiling deflection at tops of all partitions by screwing through slotted holes.

Provide double stud at all openings, including door and fixed glass frame jambs and securely attach to the frame anchors with at least two screws per anchor. Over steel door and fixed glass frames, provide steel track header and provide studs above, with back-to-back pair, centered over the door to secure control joints. Run continuous length of cold-rolled steel channel through the stud cores, overlapping at least one stud beyond jamb studs at each end. Frame out for recessed cabinets, accessories, grilles, etc., as recommended by the manufacturer for each of the project conditions.

Structural Performance: Limit deflection to L/270 for all work except as follows:

1. Limit deflection on walls to receive ceramic tile to 1/360 of clear span.

2. Limit deflection on gypsum shaftwall to 1/360 of clear span, with design lateral load of 7 psf.

3. Design and engineer exterior soffit framing systems to resist positive and negative wind pressures of 35 lbs. per sq. ft.

3.1.1 Wall Control Joints

Control joints for expansion and contraction in the walls shall be constructed with double studs installed 1/2 inch apart in interior walls or wall furrings where indicated on drawings. Control joint spacing shall not exceed 30 feet. Ceiling-height door frames may be used as vertical control joints. Door frames of less than ceiling height may be used as control joints only if standard control joints extend to ceiling from both corners of top of door frame. Control joints between studs shall be filled with firesafing insulation in fire rated partitions.

3.1.2 Blocking

Blocking shall be provided as necessary for mounted equipment. Blocking shall be metal or wood and shall be cut to fit between framing members. Blocking shall be rigidly anchored to the framing members. Under no circumstances will accessories or other wall mounted equipment be anchored directly to gypsum wallboard.

3.2 SHAFT WALL FRAMING

The shaft wall system shall be provided in accordance with the system manufacturer's published instructions. Bucks, anchors, blocking and other items placed in or behind shaft wall framing shall be coordinated with electrical and mechanical work. Fireproofing materials which are damaged or removed during shaft wall construction shall be patched or replaced.

3.3 SUSPENDED CEILING FRAMING

Suspended ceiling system framing shall be provided in accordance with ASTM C 754.

3.3.1 Hangers

Hangers shall be spaced not more than 48 inches along runner channels and 36 inches in the other direction or 42 inches in both directions unless otherwise indicated. Locations of hanger wires shall be coordinated with other work. Hangers at ends of runner channels shall be located not more than 6 inches from wall. Hanger wire shall be looped around bottom chord of open-web steel joists, or secured to structural elements with suitable fasteners. Sags or twists which develop in the suspended system shall be adjusted. Damaged or faulty parts shall be replaced.

3.3.2 Main Runners

Main runner channels shall be provided in accordance with ASTM C 754. Hanger wires shall be double strand saddle-tied to runner channels and the

ends of hanger wire shall be twisted three times around itself. Main runners shall be located to within 6 inches of the paralleling wall to support the ends of cross furring. Main runners shall not come in contact with abutting masonry or concrete walls. Where main runners are spliced, ends shall be overlapped 12 inches with flanges of channels interlocked, and shall be securely tied at each end of splice with wire looped twice around the channels.

3.3.3 Furring Channels

Furring channels shall be provided and spaced in accordance with ASTM C 754. Furring channels shall be secured to the runner channels and to structural supports at each crossing with tie wire, or equivalent fastenings. Furring channels shall be located within 2 inches of parallel walls and beams, and shall be cut 1/2 inch short of abutting walls.

3.3.4 Ceiling Openings

Support members shall be provided as required at ceiling openings for access panels, recessed light fixtures, and air supply or exhaust. Support members shall be not less than 1-1/2 inch main runner channels and vertically installed suspension wires or straps shall be located to provide at least the minimum support specified herein for furring and wallboard attachment. Intermediate structural members not a part of the structural system, shall be provided for attachment or suspension of support members.

3.3.5 Light Fixtures and Air Diffusers

Light fixtures and air diffusers shall be supported directly from suspended ceiling runners. Wires shall be provided at appropriate locations to carry the weight of recessed or surface mounted light fixtures and air diffusers.

3.3.6 Control Joints

Ceiling control joints for expansion and contraction shall be located where required by drawings. A control joint or intermediate blocking shall be installed where ceiling framing members change direction.

3.3.6.1 Interior Ceilings With Perimeter Relief

Control joints shall be provided so that linear dimensions between control joints shall not exceed 50 feet in either direction nor more than 2500 square feet.

3.3.6.2 Interior Ceilings Without Perimeter Relief

Control joints shall be provided so that linear dimensions between control joints shall not exceed 30 feet in either direction nor more than 900 square feet.

3.4 APPLICATION OF GYPSUM BOARD

Gypsum board shall be provided in accordance with ASTM C 840 and GA 216 and as specified. Paragraph 17.3.1 GENERAL of ASTM C 840 which permits usage

of water resistant gypsum board as a base for adhesive application of ceramic or plastic tile on ceilings, does not apply. Edges and ends of gypsum boards shall be cut to obtain neat fitting joints. End joints of adjoining boards shall be staggered, and shall be staggered on opposite sides of wall. Boards shall be applied with moderate contact without forcing in place. Holes for pipes, fixtures or other small openings shall be cut with a tool which will provide a neat fit. Screws shall be driven so that the heads are slightly below the plane of paper face. Fracturing the paper face or damaging the core shall be avoided. Trim shall be installed at external and internal angles formed by the intersecting gypsum board surfaces with other surfaces. Corner beads shall be installed to vertical and horizontal corners in accordance with manufacturer's published instructions.

3.4.1 Two-Ply Gypsum Board

Second layer of gypsum board shall be applied perpendicular to first layer with joints staggered and secured with mechanical fasteners.

3.4.2 Water-Resistant Gypsum Board

Water-resistant gypsum board shall be provided at the locations indicated.

3.4.3 Gypsum Sheathing

Provide gypsum sheathing board at interior and exterior locations as indicated. Gypsum sheathing at exterior locations shall be flashed at openings so that water intrusion will not contact the sheathing. Vertical end and edge joints shall abut over the centers of framing members and shall be offset a minimum of one framing space between adjacent rows of gypsum sheathing. Sheathing shall be provided in accordance with manufacturer's instructions.

Apply 3/8 inch minimum bead of silicone sealant to all joints and fasteners and trowel flat. Apply enough material to each fastener to completely cover fastener when troweled flat.

3.4.4 Cementitious Backer Board

Cementitious backer units shall be provided in accordance with ANSI A108.11. Fasteners shall be type designed for cement board application.

3.5 TRIM, MOLDINGS, AND ACCESSORIES INSTALLATION

Trim, moldings and accessories shall be provided in accordance with GA 216, except trim, moldings and accessories shall be fastened through wall board to framing by screws. No crimping will be permitted.

Provide L Bead at edge of all board abutting dissimilar materials that will be exposed in the finished construction. L bead shall match wallboard thickness. Such trim shall extend above finished ceilings to minimum of 3 inches above the finished ceiling. Where wallboard abuts masonry, provide 1/4 inch gap between L bead and face of masonry. Fill gap with paintable Latex sealant in conformance with Section 07900 JOINT SEALING.

Provide extruded aluminum corner trim at all exterior corners of gypsum wallboard partitions and column covers from the finished floor to 3 inches above the finished ceiling where ever the Finish Schedule requires the use of Hi-Impact Resistant Gypsum Board or Combination Hi-Abuse/Hi-Impact Resistant Gypsum B9oard, except as follows:

1. Where corner of partition or column is covered by wall padding;
2. Where corner of partition or column is faced with ceramic tile.

Provide extruded aluminum reveal trim for all reveals indicated on Drawings.

3.6 TAPING AND FINISHING

Gypsum board taping and finishing shall be provided in accordance with ASTM C 840. Provide a Level 5 Finish at all exposed surfaces, and extending to 3 inches above finished ceilings unless otherwise noted. Provide a Level 3 Finish at rooms identified in the Finish Schedule as "Mechanical", "Electrical", or "Emergency Electrical". Provide a Level 2 Finish at ceiling cavities and other surfaces concealed in the finish construction. Boards shall be kept free of dirt, oil and other foreign matter that could cause a lack of bond. Screw heads, dents, gouges, and cut-outs shall be filled with joint compound and sanded. Remove fill strips from control joints. Accessories at exposed joints, edges, corners, openings, and similar locations shall be taped, floated with joint compound, and sanded to produce surfaces ready for finishes.

3.7 FIRE-RESISTANT ASSEMBLIES

Gypsum wallboard construction for fire-rated assemblies shall be in accordance with UL Fire Resist Dir, or GA 600 for the design number indicated on drawings.

Provide appropriate detailing for any surface or recessed items or penetrations so that rating of assembly is maintained.

3.8 ACOUSTICAL INSULATION INSTALLATION

Walls and partitions indicated on the Drawings with STC Rating or indicated to receive acoustical insulation shall have a single, continuous layer of insulation provided as indicated and specified, filling the entire open space between the framing members. Carry insulation behind backs of all electric boxes and similar appurtenances. Provide mechanical attachment to prevent future settlement.

Refer to descriptions of shaft wall and furred wall construction, above, for further description of insulation work.

3.9 PATCHING

Surface defects and damage shall be corrected as required to leave gypsum board smooth, uniform in appearance, and ready to receive finish as specified.

-- End of Section --

SECTION 09310

CERAMIC TILE

PART 1 GENERAL

1.1 REFERENCES

The publications listed below form a part of this specification to the extent referenced. The publications are referred to in the text by basic designation only.

AMERICAN NATIONAL STANDARDS INSTITUTE (ANSI)

ANSI A108.1A	(1992) Installation of Ceramic Tile in the Wet-Set Method, with Portland Cement Mortar
ANSI A108.1B	(1992) Installation of Ceramic Tile on a Cured Portland Cement Mortar Setting Bed with Dry-Set or Latex Portland Cement Mortar
ANSI A108.5	(1992) Installation of Ceramic Tile with Dry-Set Portland Cement Mortar or Latex-Portland Cement Mortar
ANSI A108.10	(1992) Installation of Grout in Tilework
ANSI A118.1	(1992) Dry-Set Portland Cement Mortar
ANSI A118.4	(1992) Latex-Portland Cement Mortar
ANSI A118.6	(1992) Ceramic Tile Grouts
ANSI A137.1	(1988) Ceramic Tile

AMERICAN SOCIETY FOR TESTING AND MATERIALS (ASTM)

ASTM A 185	(1994) Steel Welded Wire Fabric, Plain, for Concrete Reinforcement
ASTM C 144	(1993) Aggregate for Masonry Mortar
ASTM C 150	(1997) Portland Cement
ASTM C 241	(1990) Abrasion Resistance of Stone Subjected to Foot Traffic
ASTM C 648	(1984; R 1994) Breaking Strength of Ceramic Tile

ASTM C 847	(1995) Metal Lath
ASTM C 1027	(1984; R 1990) Determining Visible Abrasion Resistance of Glazed Ceramic Tile
ASTM C 1028	(1996) Determining the Static Coefficient of Friction of Ceramic Tile and Other Like Surfaces by the Horizontal Dynamometer Pull-Meter Method

MARBLE INSTITUTE OF AMERICA (MIA)

MIA-01	(1991) Design Manual IV Dimensional Stone

TILE COUNCIL OF AMERICA (TCA)

TCA-01	(1997) Handbook for Ceramic Tile Installation

1.2 SUBMITTALS

Government approval is required for submittals with a "GA" designation; submittals having an "FIO" designation are for information only. The following shall be submitted in accordance with Section 01330 SUBMITTAL PROCEDURES:

SD-01 Data

Tile; FIO. Setting-Bed; FIO. Mortar, Grout, and Adhesive; FIO.

Manufacturer's catalog data.

SD-06 Instructions

Tile; FIO. Mortar and Grout; FIO.

Manufacturers preprinted installation and cleaning instructions.

SD-09 Reports

Testing; FIO.

SD-13 Certificates

Tile; FIO. Mortar, Grout, and Adhesive; FIO.

Certificates indicating conformance with specified requirements. A master grade certificate shall be furnished for tile.

SD-14 Samples

Tile; GA. Accessories; GA. Marble Thresholds; GA.

Samples of sufficient size to show color range, pattern, type and joints.

1.3 DELIVERY AND STORAGE

Materials shall be delivered to the project site in manufacturer's original unopened containers with seals unbroken and labels and hallmarks intact. Materials shall be kept dry, protected from weather, and stored under cover in accordance with manufacturer's instructions.

1.4 ENVIRONMENTAL REQUIREMENTS

Ceramic tile work shall not be performed unless the substrate and ambient temperature is at least 50 degrees F and rising. Temperature shall be maintained above 50 degrees F while the work is being performed and for at least 7 days after completion of the work. When temporary heaters are used they shall be vented to the outside to avoid carbon dioxide damage to new tilework.

1.5 WARRANTY

Manufacturer's standard performance guarantees or warranties that extend beyond a 1-year period shall be provided.

PART 2 PRODUCTS

2.1 TILE

Tile shall be standard grade conforming to ANSI A137.1. Containers shall be grade sealed. Seals shall be marked to correspond with the marks on the signed master grade certificate. Tile shall be impact resistant with a minimum breaking strength for wall tile of 90 lbs and 250 lbs for floor tile in accordance with ASTM C 648. Floor tile shall have a minimum coefficient of friction of 0.50 wet and dry in accordance with ASTM C 1028. Floor tile shall be Class IV Plus-Extra Heavy Traffic, durability classification as rated by the manufacturer when tested in accordance with ASTM C 1027for abrasion resistance as related to foot traffic.

2.1.1 Mosaic Floor Tile

Ceramic mosaic tile and trim shall be unglazed with cushion edges. Tile size shall be 1 x 1 inch and 2 x 2 inches as indicated and scheduled. Color shall be in accordance with colors scheduled under Section 09915, COLOR SCHEDULE.

2.1.1.1 Unglazed Trim Tile

Unglazed trim pieces shall include 4 inch high base made up from 1 x 1 inch unglazed tile, 1 x 8 inch quarter round trim,and wall trim cap, at locations indicated and scheduled.

2.1.2 Glazed Wall Tile

Glazed wall tile and trim shall be cushion edged. Tile shall be 6 x 6 matte-glazed, and 8 x 10 inches glazed, as indicated and scheduled. Color

shall be in accordance with Section 09915 COLOR SCHEDULE.

2.1.2.1 Glazed Trim Tile

Glazed trim pieces shall include 2 x 8 inch glazed bull nose trim, and 2 x 6 inch matte-glazed bull nose trim, at locations indicated and scheduled.

2.2 SETTING-BED MATERIALS

2.2.1 Thick-set Portland Cement Mortar:

Shall be Portland Cement conforming to ASTM C 150, Type I mixed with sand conforming to ASTM C 144 and potable water. Proportions shall be 1 part cement to 6 parts damp sand, by volume.

2.2.2 Dry-Set Portland Cement Mortar:

Shall be prepackaged and presanded, conforming to ANSI A118.1, as manufactured by Upco Company; L&M-Surco Mfg., Inc.; Mapei, Inc.; or approved equal.

2.2.3 Latex-Portland Cement Mortar:

Shall be prepackaged and presanded, conforming to ANSI A118.4, as manufactured by Upco Company; Mapei, Inc.; Laticrete International, Inc.; or approved equal.

2.2.4 Water:

Clean, potable, from public mains. Free of excessive amounts of salts, acids, alkalis, or other deleterious materials.

2.2.5 Joint Grout:

Proprietary, factory packaged, precolored latex-Portland cement grout mixes conforming to ANSI A118.6, equal to "Hydroment Ceramic Tile Grout", manufactured by the Upco Company, Laticrete International, Inc. equivalent products manufactured by L&M-Surco Mfg., Inc., or equal product by manufacturer licensed by Tile Council of America, as approved by Architect. A selection of at least fourteen standard colors plus black, white, and natural must be available for Architect's selection, and grout-mixes must be complete as packaged, with only addition of acrylic latex grout additive required.

2.2.6 Bond Coat:

Portland Cement paste on plastic bed or latex-portland cement mortar on cured bed.

2.2.7 Cleavage Membrane:

15 lb. roofing felt or 4 mil polyethylene sheet.

2.2.8 Metal Lath

Metal lath shall be flat expanded type conforming to ASTM C 847, and weighing not less than 2.5 pounds per square yard.

2.2.9 Reinforcing Wire Fabric

Wire fabric shall conform to ASTM A 185. Wire shall be either 2 x 2 inch mesh, 16/16 wire or 1-1/2 x 2 inch mesh, 16/13 wire.

2.3 MORTAR AND GROUT

Mortar, grout, and adhesive shall conform to the following:

2.3.1 Dry-Set Portland Cement Mortar

ANSI A118.1.

2.3.2 Latex-Portland Cement Mortar

ANSI A118.4.

2.3.3 Ceramic Tile Grout

ANSI A118.6; latex-portland cement grout.

2.4 MARBLE THRESHOLDS

Marble thresholds shall be of size required by drawings or conditions. Marble shall be Group A as classified by MIA-01. Marble shall have a fine sand-rubbed finish and shall be black in color as indicated in Section 09915, COLOR SCHEDULE, and as approved by the Contracting Officer. Marble abrasion shall be not less than 12.0 when tested in accordance with ASTM C 241.

2.5 WATERPROOFING MEMBRANE

2.5.1 Copper Shower Pans:

Copper shower pans are specified in Section 15400, PLUMBING.

2.5.2 Latex-Rubber Waterproofing and Crack Isolation Membrane:

General: Provide products that comply with ANSI A118.10 and the descriptions in this Article.

Manufacturer's standard factory-packaged, job-mixed, proprietary, 2-part formulation consisting of liquid-latex rubber and powder for trowel application and glass-fiber-fabric reinforcing.

Provide waterproofing and crack isolation membrane that is rated Commercial/Extra Heavy Duty Service, as per ASTM C 627.

PART 3 EXECUTION

3.1 PREPARATORY WORK AND WORKMANSHIP

Surface to receive tile shall be inspected and shall conform to the requirements of ANSI A108.1A or ANSI A108.1B for surface conditions for the type setting bed specified and for workmanship. Variations of surface to be tiled shall fall within maximum values shown below:

TYPE	WALLS	FLOORS
Dry-Set Mortar	1/8 inch in 8 ft.	1/8 inch in 10 ft.
Latex portland cement mortar	1/8 inch in 8 ft.	1/8 inch in 10 ft.
Epoxy	1/8 inch in 8 ft.	1/8 inch in 10 ft.

3.2 GENERAL INSTALLATION REQUIREMENTS

Tile work shall not be started until roughing in for mechanical and electrical work has been completed and tested, and built-in items requiring membrane waterproofing have been installed and tested. Floor tile installation shall not be started in spaces requiring wall tile until after wall tile has been installed. Tile in colors and patterns indicated shall be applied in the area shown on the drawings. Tile shall be installed with the respective surfaces in true even planes to the elevations and grades shown. Special shapes shall be provided as required for sills, jambs, recesses, offsets, external corners, and other conditions to provide a complete and neatly finished installation. Tile bases and coves shall be solidly backed with mortar.

3.3 INSTALLATION OF FLOOR TILE

Floor tile systems shall be provided as follows:

1. Thick Set Installation: Floor tile system shall be provided in accordance with the TCA-01, method F-121 at locations where thickset systems are scheduled. Provide latex-modified Portland cement mortar bed with latex-modified Portland cement grout.

2. Thin Set Installation: Floor tile system shall be provided in accordance with the TCA-01, method F-113 at locations where thin set is scheduled. Provide latex-modified Portland cement mortar with latex-modified Portland cement grout.

3. Shower Floor Installation: Shower floor tile system shall be provided in accordance with the TCA-01, method B415. Provide latex-modified Portland cement mortar with latex-modified Portland cement grout.

3.3.1 Latex-Portland Cement Mortar

Latex-portland cement shall be used to install tile in accordance with ANSI A108.5. Latex Portland cement shall be used when installing floor tile.

3.4 INSTALLATION OF WALL TILE

Wall tile system shall be provided by the following methods:

1. Wall Tile System Provided on Gypsum Board: Wall tile on gypsum board shall be provided in accordance with the TCA-01, method W-243, as indicated or scheduled. Provide latex-modified Portland cement mortar with latex-modified Portland cement grout.

2. Wall Tile System provided on Cementitious Backer Board: Wall tile system on cementitious backer board shall be provided in accordance with the TCA-01, method W-244, as indicated or scheduled. Provide latex-modified Portland cement mortar with latex-modified Portland cement grout.

3. Wall Tile System Provided on Concrete Masonry Units (CMU): Wall tile system on CMU shall be installed in accordance with the TCA-01, method W-202, as indicated or scheduled. Provide latex-modified Portland cement mortar with latex-modified Portland cement grout.

4. Shower Receptor, Walls at Cement Backer Boards: Shower receptor walls shall be provided in accordance with the TCA-01, method B415, as indicated or scheduled, except copper shower pan shall be provided under sloped mortar fill. Provide latex-modified Portland cement mortar with waterproof membrane, with latex-modified Portland cement grout.

3.4.1 Latex-Portland Cement Mortar

Latex-portland cement shall be used to install tile in accordance with ANSI A108.5. Latex portland cement shall be used when installing porcelain ceramic wall tile.

3.5.1 Ceramic Tile Grout

Ceramic Tile grout shall be prepared and installed in accordance with ANSI A108.10.

3.6 INSTALLATION OF MARBLE THRESHOLDS

Thresholds shall be installed where indicated in a manner similar to that of the ceramic tile floor. Thresholds shall be the full width of the opening. Head joints at ends shall not exceed 1/4 inch in width and shall be grouted full as specified for ceramic tile.

3.7 EXPANSION JOINTS

Joints shall be formed as indicated, in accordance with TCA-01, method EJ171 and sealed as specified in Section 07900 JOINT SEALING.

3.7.1 Walls

Expansion joints shall be provided at control joints in backing material. Wherever backing material changes, an expansion joint shall be installed to separate the different materials.

3.8 CLEANING AND PROTECTING

Upon completion, tile surfaces shall be thoroughly cleaned in accordance with manufacturer's approved cleaning instructions. Acid shall not be used for cleaning glazed tile. Floor tile with resinous grout or with factory mixed grout shall be cleaned in accordance with instructions of the grout manufacturer. After the grout has set, tile wall surfaces shall be given a protective coat of a noncorrosive soap or other approved method of protection. Tiled floor areas shall be covered with building paper before foot traffic is permitted over the finished tile floors. Board walkways shall be laid on tiled floors that are to be continuously used as passageways by workmen. Damaged or defective tiles shall be replaced.

-- End of Section --

SECTION 09380

SWIMMING POOL TILE

PART 1 GENERAL

1.1 REFERENCES

The publications listed below form a part of this specification to the extent referenced. The publications are referred to in the text by basic designation only.

American National Standards Institute (ANSI)

ANSI A137.1	Standard Specifications for Ceramic Tile

American Society for Testing and Materials (ASTM)

ASTM C144	(1984) Aggregate for Masonry Mortar
ASTM C150	(1985) Portland Cement
ASTM C207	(1979 R84) Hydrated Lime for Masonry Purpose

1.2 SUBMITTALS

Government approval is required for submittals with a "GA" designation; submittals having an "FIO" designation are for information only. The following shall be submitted in accordance with Section 01330 SUBMITTAL PROCEDURES:

SD-01 Data

Manufacturer's Printed Data; GA.

Submit tile manufacturer's printed data identifying each field tile unit and each trimmer and shaped unit by model or type number.

SD-13 Certificates

Master Grade Certificates; GA.

Submit for each lot of tile prior to installation.

SD-14 Samples

Tile Samples; GA. Joint Grout Samples; GA

Submit tile and joint grout samples. Submit samples of each type of tile,

shape, and trimmer of tile in each required color. Submit joint grout colors for each color of joint grout.

1.3 DESCRIPTION OF WORK

1.3.1 Work of This Section Includes:

1. Ceramic tile for swimming pools.

1.3.2 Related Work Specified Elsewhere:

1. Portland cement swimming pool plaster scratch and levelling coats for pool tile, is specified under Section 09155.

1.4 PRODUCT DELIVERY AND STORAGE

Deliver tile materials to site in unopened factory containers sealed with Grade Seals bearing printed name of manufacturer and the words "Standard Grade". Keep the Grade Seals intact and containers dry until tiles are used. Keep cementitious materials dry until used.

1.5 JOB CONDITIONS

Inspect and verify job conditions. Report all defects in base surfaces to Contracting Officer for correction before proceeding.

PART 2 PRODUCTS

2.1 BASIC MATERIALS

2.1.1 Portland cement:

ASTM C150, Type II, low alkal .

2.1.2 Hydrated lime:

ASTM C207, Type S

2.1.3 Mortar sand:

ASTM C144, at least 4% passing No. 100 sieve.

2.1.4 Joint sand:

Same as mortar sand except all passing the No. 30 sieve.

2.1.5 Water:

From domestic potable source

2.1.6 Color pigments:

Pure ground mineral oxides, non-fading, alkali and lime proof, factory weighed and packaged

2.2 TILE MATERIALS

2.2.1 Manufacturer:

American Olean Tile Company, Dal-Tile Corporation, or approved equal.

2.2.2 Grade:

Standard Grade conforming to ANSI A137.1. Provide trimmer units as indicated and specified, including special shapes as detailed or required. Tile patterns and colors shall be as indicated and specified. Mesh mounted or perforated paper backed tile is not allowed where the mesh of paper remains as a permanent part of the installation.

2.2.3 Unglazed Ceramic Mosaic Tile:

Colors as selected or scheduled, porcelain type unglazed ceramic mosaic tile, cushion or all-purpose edges, 1 inch square. Use factory-made half-size units where required for tile numbers, or make the half-size units by precision cutting on powered tile saw. Ease all cut tile edges.

2.2.4 Glazed Marker Tile:

Glazed tile units of sizes indicated, with depth and other markings indicated fired into the tile, colors noted, bright glaze.

2.2.5 Trim Units:

Provide tile trim units where indicated or necessary for complete and finished installation. Provide bullnose units for external corners and angles. Internal corners shall be squared. Provide trim units of material and finish identical to adjoining tile, except slip-resistant surfacing is not required for curved or vertical trim units. Provide special type slip-resistant tread nosing units.

2.3 SETTING BED MORTAR

Manufacturer: TEC Incorporated, TA-391 Super Flex Premium Universal Latex-Modified Thin Set Mortar.

2.4 BOND COAT

White portland cement mixed with water to creamy consistency. Do not add water or cement after initial mixing and discard material not used prior to initial set.

2.5 UNSANDED TILE JOINT GROUT

Manufacturer: TEC Incorporated, TA-620 Accucolor Premium Unsanded Grout, with TA-869 Acrylic Grout Additive; for use in grouting unglazed ceramic tile.

2.6 SANDED TILE JOINT GROUT

Manufacturer: TEC Incorporated, TA-650 Accucolor Premium Sanded Grout, with TA-869 Acrylic Grout Additive or TA-865 Acrylbond Acrylic Latex Additive; for use in grouting glazed ceramic tile.

2.7 COLORS

Colors for tile and grout shall be as scheduled under Section 09915 COLOR SCHEDULES.

PART 3 EXECUTION

3.1 PREPARATION

Clean substrates of dust, dirt, oil, grease, and deleterious substances. Conform to applicable Reference Standards and to recommendations of manufacturers of materials used.

1. Substrates To Receive Mortar Setting Beds: Keep cementitious backing damp for at least 8 hours and scrub with a neat portland cement slurry just prior to placing setting bed mortar.

2. Tile Wetting: Dampen tile according to above Reference Standards or tile manufacturer's instructions, as required.

3. Screeds: Accurately set temporary screeds to control the finish plane of mortar-bed set tile and remove as soon as setting bed is sufficiently hardened. Fill void spaces from screeds with same mortar.

3.2 TILE INSTALLATION

Arrange tile according to patterns detailed. Set tile with flush well-fitted joints, finished in true planes, plumb, square, joints of uniform size. Provide approved trimmers as shown or required. Cut tile without marring. Carefully grind and joint tile edges and cuts.

1. Mortar Bed Set Tile: Apply specified setting bed mortar, tamp, and screed to required planes. Spread no more mortar than can be covered with tile before initial set. Do not use retempered mortar. Trowel 1/32" to 1/16" thick bond coat over plastic setting bed mortar just before setting tile or apply bond coat to back of each tile placed. Set tile in position and beat firmly into the setting bed mortar. Bring tile faces to a true and proper plane. Complete all beating and leveling before mortar sets and in no case later than one hour after first placing. When ready , wet and remove paper and glue avoiding excess water. At this time adjust any out-of-line or out-of-level tile.

2. Joint Sizes: Install tile with uniform 1/16" joint width.

3. Ceramic Tile Joint Grouting: Grout tile joints full after washing out and saturating with clean water. Mix grout with water to a thick creamy consistency and force into joints for entire joint

depth, flush with surface. Clean off all excess and fill skips and gaps before grout sets. Use white grout throughout. Provide dampness for minimum 3-day curing and polish with clean dry cloths.

3.3 CLEANING

Remove stains, cement, grout, and foreign matter after grouted joints are fully set. Do not use any acid for cleaning. Repair all defective joints as approved.

-- End of Section --

SECTION 09445

RESINOUS TERRAZZO FLOORING

PART 1 GENERAL

1.1 REFERENCES

The publications listed below form a part of this specification to the extent referenced. The publications are referred to in the text by basic designation only.

AMERICAN SOCIETY FOR TESTING AND MATERIALS (ASTM)

ASTM D 56 (1996) flash Point by Tag Closed Tester

NATIONAL TERRAZZO & MOSAIC ASSOCIATION (NTMA)

NTMA-01 (1995) Terrazzo Information Guide

1.2 GENERAL

Resinous terrazzo flooring in the colors indicated shall be applied in the areas shown. Flooring shall be an epoxy terrazzo system that conforms to the requirements specified in paragraphs 2.01A and B of NTMA-01.

Work also includes a custom designed, multi-colored "Class of 1965" crest within the terrazzo work at two locations indicated on the Drawings.

1.3 SUBMITTALS

Government approval is required for submittals with a "GA" designation; submittals having an "FIO" designation are for information only. The following shall be submitted in accordance with Section 01330 SUBMITTAL PROCEDURES:

SD-01 Data

Terrazzo Floor System; GA. Mixing, Proportioning, and Installation; GA. Cleaning and Sealing; FIO.

Resin manufacturer's descriptive data, mixing, proportioning, and installation instructions. Maintenance literature for terrazzo cleaning and sealing shall be included.

SD-04 Drawings

Terrazzo Floor System; GA. Class of 1965 Crest; GA.

Drawings indicating the type, size, and layout of divider strips and control joint strips.

Provide shop drawings of artwork for the Class of 1965 crest, minimum 1/2 scale. Show layouts, dimensions, size and locations of divider strips, locations of different colors, etc.

SD-13 Certificates

Terrazzo Floor System; GA.

Certificates indicating conformance with specified requirements. Certificates shall be accompanied by certified test reports showing that the conductive resinous terrazzo floor has been tested and meets the requirements specified.

SD-14 Samples

Terrazzo Systems, Initial Selection; GA. Class of 1965 Crest, Initial Color Samples; GA.

Initial Selection Samples to Show Match of Colors Required: Two 6 x 6 inches, (minimum) samples of each color of resinous terrazzo and two 6 inches lengths, of each type of strip.

After submittal of Initial Selection Samples, the Contracting Officer will review samples against colors required. If the match to required colors needs to be adjusted, submit two more samples of mix, adjusted as requested by the Contracting Officer.

Terrazzo Systems, Verification Samples; FIO. Class of 1965 Crest, Verification Color Samples; GA.

Verification Samples: After Initial Selection Samples have been approved, submit two 12 x 12 inches, (minimum) samples of each color of resinous terrazzo and two 6 inches lengths, of each type of strip.

1.4 QUALIFICATION OF APPLICATOR

Applicator shall be approved by the resin manufacturer and shall have a minimum of 5 years experience in the application of the materials to be used and shall have completed 8 successful installations within the past 2 years.

1.5 QUALIFICATION OF ARTIST

The terrazzo artist preparing the artwork shop drawings for the Class of 1965 Crest shall have a minimum of 5 years experience in the design of terrazzo artwork.

The terrazzo artist installing the Class of 1965 Crest shall have a minimum of 5 years experience in the installation of terrazzo artwork similar to the type of work required for this Project.

1.6 DELIVERY AND STORAGE

Materials shall be delivered to the project site in manufacturer's original

unopened containers. Materials shall be kept in a clean, dry, area with temperatures controlled between 50 to 90 degrees F.

1.7 ENVIRONMENTAL REQUIREMENTS

Areas to receive terrazzo shall be maintained at a temperature above 50 degrees F for 2 days prior to installation and for 7 days following installation.

PART 2 PRODUCTS

2.1 PRIMER

Primer shall be a material recommended by the resin manufacturer which will penetrate the pores of the substrate and bond with the topping to form a permanent monolithic bond between the substrate and the topping.

2.2 EPOXY RESIN

Provide epoxy resin for the specified terrazzo flooring in conformance to the requirements shown in NTMA-01.

2.3 FILLERS

Fillers, if required, shall be inert mineral or cellulosic material as recommended by the manufacturer and best suited for the resin binder used. Fillers shall be furnished in the quantity necessary to impart the required color and physical characteristics.

2.4 MARBLE CHIPS

Marble chips shall be of domestic origin of proportions, sizes and colors to match colors as scheduled under Section 09915, COLOR SCHEDULE.

Stone chips for use within the Class of 1965 Crest shall be as recommended by the Terrazzo Artist to match colors shown in the Crest artwork attached at the end of this Section.

2.5 STRIPS

2.5.1 Divider Strips

Divider strips shall be full depth of terrazzo, zinc and brass as indicated on Drawings. Width of strips shall be 1/2 in., 1/4 in., and 1/8 in. as shown on Drawings. If not shown otherwise, provide 1/8 in. wide divider strips at full perimeter of all areas to receive terrazzo. Perimeter strip shall be located 1/8 in. from the face of walls.

Divider Strips to be used in the Class of 1965 Crest shall be as recommended by the Terrazzo Artist.

2.5.2 Control Joint Strips

Control joint strips shall be depth as required, and of zinc. Neoprene

filler shall be black in color.

2.6 GROUT

Grout shall be as recommended by the manufacturer of the resin.

2.7 SEALER

Sealer shall have a pH factor between 7 and 10 and shall be a penetrating type specially prepared for use on terrazzo. The sealer shall not discolor or amber the terrazzo and shall produce a slip resistant surface. Flash point of sealer shall be a minimum of 80 degrees F when tested in accordance with ASTM D 56.

1. Coefficient of Friction: Sealer shall be UL listed for "Slip Resistance" and shall produce a coefficient of friction (SCOF) of 0.6 minimum.

2.8 CUSTOM CLASS OF 1965 CREST

Provide custom designed terrazzo crest at two locations indicated for the Class of 1965. Custom crests shall be executed using a minimum of 20 different terrazzo colors, as shown in the artwork attached at the end of this Section. The Contracting Officer will furnish to the Contractor an electronic image in color of the Class of 1965 crest for preparation of shop drawings, and for execution of the crest in the terrazzo work.

PART 3 EXECUTION

3.1 PREPARATION OF CONCRETE SUBFLOOR

Installation of the floor topping shall not commence until the concrete substrate is at least 28 days old. The concrete surfaces shall be prepared in accordance with the instructions of the epoxy resin manufacturer.

Provide shot blast preparation of concrete surfaces in accordance with recommendations of the epoxy resin manufacturer, and with NTMA's written recommendations for terrazzo installation.

Comply with NTMA's written recommendations for terrazzo and accessory installation.

Place, rough grind, grout, cure grout, fine grind, and finish terrazzo according to manufacturer's written instructions and NTMA's "Guide Specification for Epoxy Terrazzo."

Ensure that matrix components and fluids from grinding operations do not stain terrazzo by reacting with divider and control-joint strips.

Delay fine grinding until heavy trade work is complete and construction traffic through area is restricted.

Flexible Reinforcing Membrane: If conditions of substrates require it, provide crack control as follows:

1. Prepare and prefill substrate cracks with membrane material.
2. Install membrane to produce full substrate coverage in areas to receive terrazzo.
3. Reinforce membrane with fiberglass scrim.
4. Prepare membrane according to manufacturer's written instructions before applying substrate primer.

C. Primer: Apply to terrazzo substrates according to manufacturer's written instructions.

Divider and Accessory Strips: Install in locations indicated in adhesive setting bed without voids below strips. Layout of divider strips shall be precise, with dimensions measured to the center line of divider strips, except where perimeter divider strips are parallel with wall in which case, the edge of the divider strip shall align with the edge of the perimeter strip. Provide smooth radius curves. Segmented curves are not acceptable. After installation of divider strips, schedule review of layout by the Contracting Officer. Adjust layout as instructed prior to installing terrazzo.

Control-Joint Strips: Install back to back directly above substrate control joints. Install with 1/4-inch gap between strips and install black sealant in gap.

3.2 MIXING, PROPORTIONING, AND INSTALLATION

Mixing, proportioning, and installing shall be in accordance with the approved instructions of the manufacturer. Strips shall be installed in locations indicated. The topping shall be applied to give a finish thickness of 3/8 in.

Fine Grinding: Grind with 120 or finer grit stones until all grout is removed from surface for a smooth finish. Repeat rough grinding, grout coat, and fine grinding if large voids exist after initial fine grinding. Produce surface with a minimum of 70 percent aggregate exposure.

Remove and replace terrazzo areas that evidence lack of bond with substrate. Cut out terrazzo areas in panels defined by strips and replace to match adjacent terrazzo, or repair panels according to NTMA's written recommendations, as approved by Contracting Officer.

Construction Tolerances: Limit variation in terrazzo surface from level to 1/4 inch in 10 feet.

3.3 CLEANING AND SEALING

The terrazzo shall be washed with a neutral cleaner and where required shall be cleaned with a fine abrasive to remove any stains or cement smears. The cleaned surfaces shall be rinsed. When dry, a terrazzo sealer shall be applied in accordance with the manufacturer's directions.

3.4 PROTECTION

The terrazzo work shall be covered and protected from damage until

completion of the work of all other trades.

-- End of Section --

USMA
66

SECTION 09446

PRECAST TERRAZZO STAIR TREADS/RISERS

PART 1 GENERAL

1.1 REFERENCES

The publications listed below form a part of this specification to the extent referenced. The publications are referred to in the text by basic designation only.

NATIONAL TERRAZZO & MOSAIC ASSOCIATION (NTMA)

NTMA-01 (1995) Terrazzo Information Guide

1.2 GENERAL

Precast terrazzo stair treads in the colors indicated shall be installed in the areas shown. Precast terrazzo shall be a precast terrazzo system that conforms to the requirements specified in paragraphs 2.01A and B of NTMA-01.

1.3 SUBMITTALS

Government approval is required for submittals with a "GA" designation; submittals having an "FIO" designation are for information only. The following shall be submitted in accordance with Section 01330 SUBMITTAL PROCEDURES:

SD-01 Data

Precast Terrazzo Stair Treads; GA.

Precast terrazzo manufacturer's descriptive data, mixing, proportioning, and installation instructions. Maintenance literature for precast terrazzo cleaning and sealing shall be included.

SD-04 Drawings

Precast Terrazzo Stair Treads; GA, Wall Base; GA.

Shop Drawings: Showing layout of precast terrazzo stair treads and wall bases. Include details of precast terrazzo construction for materials, dimensions of individual components, profiles, and finishes.

1. Show precast terrazzo fabrication and installation requirements including plans, elevations, sections, component details, and attachments to other work.
2. Show layout of abrasive strips.
3. Show layout of stair treads, risers, and landings.

4. Show large-scale details of precast terrazzo jointing and edge conditions. Include anchorage details.
5. Show layout of wall bases, including straight and curved.

SD-06 Instructions

Maintenance Instructions; FIO.

Submit 2 copies of written instructions for recommended periodic maintenance of precast terrazzo.

SD-13 Certificates

Material Certification; GA.

Supplier's/manufacturer's written certification that terrazzo materials provided meet or exceed specified NTMA properties.

SD-14 Samples

Stair Tread Initial Selection Samples; GA, Wall Base Initial Selection Samples; GA

Initial Selection Samples to Show Match of Colors Required: Two 6 x 6 inches, (minimum) samples of each color of stair treads and two 6 inches lengths, of each type and color of wall base.

After submittal of Initial Selection Samples, the Contracting Officer will review samples against colors required. If the match to required colors needs to be adjusted, submit two more samples of each, adjusted as requested by the Contracting Officer.

Stair Tread Verification Samples; FIO, Wall Base Verification Samples; FIO

Verification Samples: After Initial Selection Samples have been approved, submit two 12 x 12 inches, (minimum) samples of each color of stair treads and two 6 inches lengths, of each type and color of wall bases.

1.4 QUALIFICATION OF APPLICATOR

Applicator shall be approved by the resin manufacturer and shall have a minimum of 3 years experience in the application of the materials to be used and shall have completed 8 successful installations within the past 2 years.

1.5 QUALITY ASSURANCE

1.5.1 NTMA Standards:

Comply with specified provisions and recommendations of National Terrazzo and Mosaic Association, Inc. (NTMA).

1.5.2 Installer Qualifications:

Engage an experienced installer who has completed precast terrazzo installations similar in material, design, and extent to that indicated for this Project and with a record of successful in-service performance.

1.5.3 Source Limitations for Marble:

Obtain each color, grade, type, and variety of marble from one source with resources to provide materials of consistent quality in appearance and physical properties without delaying the Work.

1.5.4 Mockups:

Before installing precast terrazzo, construct mockup of two adjacent stair treads showing type and color required to verify selections made under Sample submittals and to demonstrate aesthetic effects and qualities of materials and execution. Build mockups to comply with the following requirements, using materials indicated for completed Work.

1. Locate mockups in the location indicated or, if not indicated, as directed by Contracting Officer.
2. Notify Contracting Officer 7 days in advance of dates and times when mockups will be constructed.
3. Demonstrate the proposed range of aesthetic effects and workmanship.
4. Obtain Contracting Officer's approval of mockups before proceeding with precast terrazzo installation.
5. Approved mockups in an undisturbed condition at the time of Substantial Completion may become part of the completed Work.

1.6 DELIVERY AND STORAGE

Deliver materials to Project site in suppliers' original wrappings and containers, labeled with source's or manufacturer's name, material or product brand name, and lot number, if any.

Store materials in their original, undamaged packages and containers, inside a well-ventilated area protected from weather, moisture, soiling, extreme temperatures, and humidity.

1.7 ENVIRONMENTAL REQUIREMENTS

Areas to receive terrazzo shall be maintained at a temperature above 50 degrees F for 2 days prior to installation and for 7 days following installation.

PART 2 PRODUCTS

2.1 MANUFACTURERS

A. Available Manufacturers: Subject to compliance with requirements, manufacturers offering precast terrazzo products that may be incorporated into the Work include, but are not limited to, the following:

1. Precast & Building Supply Corp.

2. Roberson Precast Limited.
3. Romoco Precast Terrazzo Products.
4. Wausau Tile, Inc.; Terra Paving Products Division.

2.2 MATERIALS

2.2.1 Portland Cement:

ASTM C 150, Type 1.

2.2.2 Water:

Potable.

C. Sand:

ASTM C 33.

2.2.4 Marble Chips:

Sizes conforming to NTMA gradation standards for mix indicated, with Ha 10 minimum abrasive-hardness value when tested according to ASTM C 241, 0.75 percent maximum 24-hour absorption rate, dust content of less than 1 percent by weight, and containing no deleterious or foreign matter.

Marble chips shall be of domestic origin of proportions, sizes and colors to match colors as scheduled under Section 09915, COLOR SCHEDULE.

2.2.4 Abrasive Strips:

The abrasive strip shall contain not less than 60 percent virgin grain aluminum oxide abrasive. Binder should be fully cured resilient type epoxy; epoxy binder to filler ratio to be 13 percent minimum. Color shall be black and extend uniformly through strip. The strips should be 1/2 inch wide by 3/8 inch deep and extend the full length of each tread. Where treads are made up of more than one section, the strips shall be similarly divided. The strips should be 1/2 inch apart and 1 inch back from nosing and recessed into tread extending not more than 1/16 inch above tread surface. Strips shall be factory applied with an epoxy based adhesive to tread.

2.3 PRECAST TERRAZZO

2.3.1 Precast Terrazzo Base Units:

The base should be 3/4 inch thickness with finished 1/4 inch chamfered edge and top, in straight and curved/radius sections. Bottom to be straight (no cove) with edge tapered to permit coping to floor finish (terrazzo). Height shall be 4 inches above finished floor surface. Bottom edge shall be coped to maintain 1/8 inch clear above top of floor finish and resultant 1/8 inch gap filled with sealant. Sealant color to be black. Color of base shall be as specified in Section 09915, COLOR SCHEDULE.

Preformed Base Corners: Provide precast, premanufactured one-piece inside

and outside corner units. Mitered corners are not acceptable.

Preformed Base Ends: At exposed ends of bases, provide precast, preformed, one-piece units, with 90 degree chamfer at top, returning 90 degrees to the wall; and carrying 90 degrees from top, vertically down the leading edge of the corner.

2.3.2 Precast Terrazzo Stair Tread Units:

Comply with NTMA's written recommendations for fabricating precast cementitious terrazzo units in sizes and profiles indicated. Reinforce units as required by unit sizes, profiles, and thickness and as recommended by manufacturer.

1. Stair Treads and Landings: Provide abrasive strips as specified above.

2.3.3 Grinding and Finishing

Grind and finish precast terrazzo stair treads and wall bases to smooth finish, matching approved samples.

2.4 SEALER

Sealer shall have a pH factor between 7 and 10 and shall be a penetrating type specially prepared for use on terrazzo. The sealer shall not discolor or amber the terrazzo and shall produce a slip resistant surface. Flash point of sealer shall be a minimum of 80 degrees F when tested in accordance with ASTM D 56.

1. Coefficient of Friction: Sealer shall be UL listed for "Slip Resistance" and shall produce a coefficient of friction (SCOF) of 0.6 minimum.

PART 3 EXECUTION

3.1 PREPARATION

Examine substrate to ensure that surface levelness tolerances are within tolerance ranges required by NTMA for type of terrazzo application specified.

1. Notify Contractor of unsatisfactory levelness tolerances. Do not begin installation until unsatisfactory tolerances have been corrected and are ready to receive terrazzo.

Clean and prepare substrate to comply with NTMA specifications for type of precast terrazzo application indicated. Clean substrate of loose chips and foreign matter.

3.2 INSTALLATION, GENERAL

Install precast terrazzo units using method recommended by NTMA and manufacturer, unless otherwise indicated. Set units with alignment level

and true to dimensions, varying 1/8 inch maximum in length, height, or width.

1. Treads: Back-butter for full contact with substrate.

Seal joints between units with cement grout matching precast terrazzo matrix.

Install abrasive strips as indicated with abrasive-strip surface projecting slightly above terrazzo surface without causing a hazard.

-- End of Section --

SECTION 09510

ACOUSTICAL CEILINGS

PART 1 GENERAL

1.1 REFERENCES

The publications listed below form a part of this specification to the extent referenced. The publications are referred to in the text by basic designation only.

AMERICAN SOCIETY FOR TESTING AND MATERIALS (ASTM)

ASTM B 164	(1998) Standard Specification for Nickel-Copper Alloy Rod, Bar and Wire
ASTM C 635	(1995) Manufacture, Performance, and Testing of Metal Suspension Systems for Acoustical Tile and Lay-In Panel Ceilings
ASTM C 636	(1996) Installation of Metal Ceiling Suspension Systems for Acoustical Tile and Lay-In Panels
ASTM E 1264	(1990) Standard Classification for Acoustical Ceiling Products
ASTM E 1414	(1991a) Standard Test for Airborne Sound Attenuation Between Rooms Sharing a Common Ceiling Plenum

UNDERWRITERS LABORATORIES (UL)

UL Fire Resist Dir	(1997) Fire Resistance Directory (2 Vol)

1.2 GENERAL REQUIREMENTS

Acoustical treatment shall consist of sound controlling units mechanically mounted on a ceiling suspension system. The unit size, texture, finish, and color shall be as specified. . The location and extent of acoustical treatment shall be as shown on the drawings and as scheduled. Seismic protection is required.

1.3 SUBMITTALS

Government approval is required for submittals with a "GA" designation; submittals having an "FIO" designation are for information only. The following shall be submitted in accordance with Section 01330 SUBMITTAL PROCEDURES:

SD-01 Data

Acoustical Ceiling System; FIO.

Manufacturer's descriptive data, catalog cuts, and installation instructions.

SD-04 Drawings

Acoustical Ceiling System; GA.

Drawings showing suspension system, method of anchoring and fastening, details, and reflected ceiling plan.

SD-09 Reports

Fire Resistive Ceilings; FIO. Ceiling Attenuation Class and Test; FIO.

Reports by an independent testing laboratory attesting that acoustical ceiling systems meet specified fire endurance and sound transmission requirements. Data attesting to conformance of the proposed system to Underwriters Laboratories requirements for the fire endurance rating listed in UL Fire Resist Dir may be submitted in lieu of test reports.

SD-13 Certificates

Acoustical Units; FIO.

Certificate attesting that the mineral based acoustical units furnished for the project contains recycled material and showing an estimated percent of such material.

SD-14 Samples

Acoustical Units; GA.

Two samples of each type of acoustical unit and each type of suspension grid tee section showing texture, finish, and color.

1.4 DELIVERY AND STORAGE

Materials shall be delivered to the site in the manufacturer's original unopened containers with brand name and type clearly marked. Materials shall be carefully handled and stored in dry, watertight enclosures. Immediately before installation, acoustical units shall be stored for not less than 24 hours at the same temperature and relative humidity as the space where they will be installed in order to assure proper temperature and moisture acclimation.

1.5 ENVIRONMENTAL REQUIREMENTS

A uniform temperature of not less than 60 degrees F nor more than 85 degrees F and a relative humidity of not more than 70 percent shall be maintained before, during, and after installation of acoustical units.

1.6 SCHEDULING

Interior finish work such as plastering, concrete and terrazzo work shall be complete and dry before installation. Mechanical, electrical, and other work above the ceiling line shall be completed and heating, ventilating, and air conditioning systems shall be installed and operating in order to maintain temperature and humidity requirements.

1.7 WARRANTY

Manufacturer's standard performance guarantees or warranties that extend beyond a one year period shall be provided.

1.8 EXTRA MATERIALS

Spare tiles of each color shall be furnished at the rate of 5 tiles for each 1000 tiles installed. Tiles shall be from the same lot as those installed.

PART 2 PRODUCTS

2.1 ACOUSTICAL UNITS

Acoustical units shall conform to ASTM E 1264, Class A, and the following requirements:

2.1.1 Units for Exposed-Grid System as follows:

ACT-1: Panels - 24 inch x 48 inch x 5/8 inch thick square edge wet formed mineral fiber with non-directional medium textured face, white factory applied vinyl latex paint, NRC of 0.55, CAC of 35, Class A fire resistant, sag resistant, light reflectance of 0.83, ASTM E 1264 Type III, Form 2, Pattern C.

1. Suspension System - 15/16 inch exposure, hot dipped galvanized steel T with white baked polyester paint face, intermediate-duty class.
2. Edge Trim, 15/16 inch exposure, hot dipped galvanized L with white baked polyester paint finish, to match grid.
3. Hanger wires - galvanized steel.

ACT-2: Panels - 24 inch x 24 inch x 3/4 inch thick beveled tegular edge wet formed mineral fiber with non-directional medium textured face, white, NRC of 0.65, CAC of 33, Class A fire resistant, sag resistant, light reflectance of 0.83, ASTM E 1264 Type III, Form 1, Pattern E I.

1. Suspension System - 9/16 inch exposure, hot dipped galvanized steel T with white baked polyester paint face, intermediate duty class.
2. Edge Trim, 15/16 inch exposure, hot dipped galvanized L with white baked polyester paint finish, to match grid.
3. Hanger wires - galvanized steel.

ACT-3: Panels - 24 inch x 24 inch x 5/8 inch thick square edge ceramic and mineral fiber composite with non-perforated face, white factory applied scrubbable vinyl plastic paint, NRC of 0.10, CAC of 40, Class A fire resistant, sag resistant, light reflectance of 0.80, ASTM E 1264 Type XX High density ceramic like composition with scrubbable finish, Pattern G.

1. Suspension System - 15/16 inch exposure, aluminum T with white baked polyester paint face, intermediate-duty class, with two aluminum hold down clips per panel.
2. Edge Trim, 15/16 inch exposure, aluminum L with white baked polyester paint finish, to match grid.
3. Hanger wires - Monel, UNS Alloy N04400, cold worked, annealed, conforming to ASTM B 164.

ACT-4: Panels - 24 inch x 120 inch x 1.5 inch thick, beveled along long sides, square edge at short sides, excelsior bonded with inorganic binders, white factory applied finish, NRC of 0.50, Class A fire resistant, sag resistant, light reflectance of 0.75, ASTM 1264 Type XIV, Pattern L.

1. Suspension System - Gypsum ceiling framing (per Section 09250 GYPSUM WALLBOARD), panels face fastened to suspension system with color match screws by panel manufacturer at 12 inch nominal on center along panel width and 24 inches nominal on center along panel length.
2. Edge Trim, 15/16 inch exposure, hot dip galvanized steel L with white baked polyester paint finish.
3. Hanger wires - per suspension system.

ACT-5: Not Used

ACT-6: Not Used

2.2 SUSPENSION SYSTEM

Suspension system shall be standard, exposed-grid, standard width flange and narrow width slotted flange as required, and shall conform to ASTM C 635 for intermediate-duty systems. Surfaces exposed to view shall be aluminum or galvanized steel as specified above, with a factory-applied white baked-enamel finish. Wall molding shall have a flange of not less than 15/16 inch. Suspended ceiling framing system shall have the capability to support the finished ceiling, light fixtures, air diffusers, and accessories. The suspension systems shall have a maximum deflection of 1/360 of span length.

Aluminum Trim Channels: Provide extruded aluminum trim channels of nominal 6 and 8 inch height as indicated, 3/4 inch deep channel profile, with base metal thickness not less than 1/16 in; finished to match grid; equal to Armstrong Axiom perimeter trim channels. Finish shall match adjacent exposed suspension system.

2.3 ACCESS PANELS

Access panels shall match adjacent acoustical units and shall be designed and equipped with suitable framing and fastenings for removal and

replacement without damage. Panel shall be not less than 12 by 12 inches or more than 12 by 24 inches. An identification plate of 0.032 inch thick aluminum, 3/4 inch in diameter, stamped with the letters "AP" and finished the same as the unit, shall be attached near one corner on the face of each access panel.

Labels for concealed items shall be self-adhesive, machine-engraved plastic. Text shall be color and in font selected by Contracting Officer. Back ground shall be in color selected by Contracting Officer. Provide up to eight (8) colors as directed by Contracting Officer.

2.4 FINISHES

Acoustical units and suspension system members shall have manufacturer's standard textures, patterns and finishes as specified. Ceiling suspension system components shall be treated to inhibit corrosion.

2.5 CEILING ATTENUATION CLASS AND TEST

Ceiling attenuation class (CAC) range of acoustical units, specified above, shall be determined in accordance with ASTM E 1414. Test ceiling shall be continuous at the partition and shall be assembled in the suspension system in the same manner that the ceiling will be installed on the project. System shall be tested with all acoustical units installed.

PART 3 EXECUTION

3.1 INSTALLATION

Acoustical work shall be provided complete with necessary fastenings, clips, and other accessories required for a complete installation. Mechanical fastenings shall not be exposed in the finished work. Hangers shall be laid out for each individual room or space. Hangers shall be placed to support framing around beams, ducts, columns, grilles, and other penetrations through ceilings. Main runners and carrying channels shall be kept clear of abutting walls and partitions. At least two main runners shall be provided for each ceiling span. Wherever required to bypass an object with the hanger wires, a suspension system shall be installed, so that all hanger wires will be plumb.

3.1.1 Suspension System

Suspension system shall be installed in accordance with ASTM C 636 and as specified herein. There shall be no hanger wires or other loads suspended from underside of steel decking.

3.1.1.1 Plumb Hangers

Hangers shall be plumb and shall not press against insulation covering ducts and pipes.

3.1.1.2 Splayed Hangers

Where hangers must be splayed (sloped or slanted) around obstructions, the

resulting horizontal force shall be offset by bracing, countersplaying, or other acceptable means.

3.1.2 Wall Molding

Wall molding shall be provided where ceilings abut vertical surfaces. Wall molding shall be secured with screws not more than 3 inches from ends of each length and not more than 16 inches on centers between end fastenings. Wall molding springs shall be provided at each acoustical unit in semi-exposed or concealed systems. Wall moldings shall be aluminum or 316 stainless steel at pool environments.

3.1.3 Acoustical Units

Acoustical units shall be installed in accordance with the approved installation instructions of the manufacturer. Edges of acoustical units shall be in close contact with metal supports, with each other, and in true alignment. Acoustical units shall be arranged so that units less than one-half width are minimized. Units in exposed-grid system shall be held in place with manufacturer's standard hold-down clips, if units weigh less than 1 psf or if required for fire resistance rating.

3.2 CEILING ACCESS PANELS

Provide ceiling access panels for all items that require access for maintenance or adjustment. Ceiling access panels shall be located directly under the items which require access.

Label all access panels with description of the concealed item.

3.3 CLEANING

Following installation, dirty or discolored surfaces of acoustical units shall be cleaned and left free from defects. Units that are damaged or improperly installed shall be removed and new units provided as directed.

-- End of Section --

SECTION 09600

INTERIOR STONE

PART 1 GENERAL

1.1 DESCRIPTION OF WORK

Work of this Section includes the following:

1. Stone countertops.
2. Installation of salvaged limestone and marble sections/units.

1.2 REFERENCES

The publications listed below form a part of this specification to the extent referenced. The publications are referred to in the text by basic designation only.

MARBLE INSTITUTE OF AMERICA (MIA)

MIA Manual (1990) Dimension Stones of the World

1.3 SUBMITTALS

Government approval is required for submittals with a "GA" designation; submittals having an "FIO" designation are for information only. The following shall be submitted in accordance with Section 01330 SUBMITTAL PROCEDURES:

SD-01 Data

Stone; FIO; Stone Accessories; FIO.

Submit manufacturer's technical data for each type of stone, stonework accessory and other manufactured product required.

SD-04 Drawings

Shop Drawings; GA.

Submit cutting and setting drawings indicating sizes, dimensions, sections and profiles of stonework units, arrangement and provisions for jointing, supporting, anchoring and bonding stonework; and other details showing relationships with, attachment to, and reception of, related work.

1. Include large scale details of decorative surfaces and inscriptions.

SD-13 Certificates

Certificate of Experience; GA.

Submit notorized copy of installer's experience. Submit notarized copy of analysis/testing firm's experience.

SD-14 Samples

Stone; GA.

Submit sets of samples for each color,grade, finish, type and variety of stone consisting of units not less than 12 in. x 12 in.. Include 3 or more units in each set of samples showing the full range of appearance characteristics to be expected in completed work.

Stone Anchors; GA.

Submit actual samples for stone anchor to be used in the installation of previously salvaged limestone and marble sections.

1.4 RELATED WORK

Examine Contract Documents for requirements that affect Work of this Section. Other Specification Sections that directly relate to Work of this Section include, but are not limited to:

1. Section 06400, ARCHITECTURAL WOODWORK; Wood casework to receive stone countertops.
2. Section 09915, COLOR SCHEDULE.

1.5 QUALITY ASSURANCE

1.5.1 Single Source Responsibility for Stone:

Obtain each color, grade, finish, type and variety of stone from a single source with resources to provide materials of consistent quality in appearance and physical properties, including the capacity to cut and finish material without delaying the progress of the Work.

1.5.2 Single Source Responsibility for Setting Materials:

Obtain mortar ingredients and uniform quality and from one manufacturer for each cementitious and admixture component and from one source or producer for each aggregate.

1.5.3 Installer Qualifications:

Engage an Installer who has successfully completed 3 projects within the previous 5 years of interior stonework comparable in material, design and extent to that indicated for this project.

1.5.4 Analysis/Testing Firm Qualifications

Provide the services of an analysis/testing firm with not less than 10

years experience in the analysis/testing of Historic Building Materials, including compositional analysis/testing and color matching acceptable to the Contracting Officer.

1.6 PROJECT CONDITIONS

Do not set stone when air temperature or temperature of materials is below 50° F. (10° C.).

Substrates: Proceed with work only when substrate construction and penetration work is complete.

1.7 DELIVERY, STORAGE AND HANDLING

Deliver materials to project in undamaged condition.

Store and handle stone and related materials to prevent their deterioration or damage due to moisture, temperature changes, contaminants, corrosion, breakage, chipping, or other causes.

1. Do not use pinch or wrecking bars.

2. Lift with wide-belt type slings where possible; do not use wire rope or ropes containing tar or other substances which might cause staining. If required for moving stone, use wood rollers with cushions at end of wood slides.

3. Store stones on wood skids or pallets, covered with non-staining, waterproof membrane. Place and stack skids and stones to distribute weight evenly and to prevent breakage or cracking of stones.

4. Protect stone on wood skids or pallets, covered with non-staining, waterproof membrane, but allow air to circulate around stones.

PART 2 PRODUCTS

2.1 MATERIALS

2.1.1 COUNTERTOP MATERIALS

Comply with referenced standards and other requirements indicated applicable to each type of material required.

Provide matched blocks from a single quarry for each type, variety, color and quality of stone required. Extract blocks from a single bed of quarry stratum, unless stones from randomly selected blocks are acceptable to Contracting Officer for aesthetic effect. Form each item from a single piece to the greatest extent possible.

2.1.2 PREVIOUSLY SALVAGED LIMESTONE AND MARBLE SECTIONS FOR INSTALLATION

Previously salvaged limestone and marble sections for installation will be furnished as indicated by the Government.

2.2 MARBLE COUNTERTOPS

Marble: Provide Marble in conformance to ASTM C 503, and the following:

1. Color 1: Saint Germain (Grey).
2. Color 2: Giallo Sahara (Yellow).
3. Thickness: 3/4 inch.
4. Finish: Polished

2.3 STONE ANCHORS AND ATTACHMENTS

Provide anchors and attachments of type and size required to support stonework and fabricated from the following metals for conditions and anchors indicated below:

1. Stainless Steel, AISI Type 302 or 304.

2.4 STONE ACCESSORIES

Setting Buttons: Lead or resilient plastic buttons, non-staining to stone, sized to suit joint thicknesses and bed depths of stonework involved.

Cleaner: Provide stone cleaners of proper formulation for kinds of stones, finishes and applications indicated, as recommended by stone producer and, if sealer specified, by sealer manufacturer. Do not use acid-type cleaning agents or other cleaning compounds containing caustic or harsh fillers, except where expressly approved by stone producer for type of condition involved.

Sealer for Countertops: Provide stone-source recommended, silicon-based sealer for application to finished countertops to prevent stains caused by oil, grease, water, and alkali materials.

2.5 COUNTERTOP FABRICATION

General: Fabricate interior stonework countertops in sizes and shapes required to comply with requirement indicated, including details on Drawings and final shop drawings.

1. For marble comply with recommendations of MIA Manual.

Cut and drill sinkages and holes in stones for anchors, fasteners, supports and lifting devices as indicated or needed to set stonework securely in place; shape beds to fit supports.

Cut stone countertops to produce pieces of thickness, size and shape indicated or required and within fabrication tolerances recommended by applicable stone association or stone source, for faces, edges, beds, and backs.

1. Thickness of Interior Stone Countertops: Provide 3/4 inch thickness unless otherwise indicated on Drawings.

2. Clean sawn backs of stones to remove rust stains and free iron particles.

Contiguous Work: Provide chases, reveals, reglets, openings and similar features as required to accommodate contiguous work.

Fabricate molded work, to produce stone shapes having a uniform profile throughout their entire length and with precisely formed arises slightly eased to prevent snipping, and matched at joints between units.

Finish exposed faces and edges of stones to comply with requirements indicated for finish under each type and application of stone required and to match approved samples.

Carefully inspect finished stones at fabrication plant for compliance with requirements relative to qualities of appearance, material and fabrication; replace defective stones with ones that do comply.

1. Grade and mark stones for overall uniform appearance when assembled in place. Natural variations in appearance are acceptable if installed stones match range of colors and other appearance characteristics represented in approved samples.

2.6 MORTAR

Portland Cement: ASTM C 150, except complying with non-staining requirements of ASTM C 91 for not more than 0.03% water soluble alkali, when tested in conformance with ASTM C 114. Furnish Type I, except Type III may be used for setting stonework in cold weather. Obtain cement from single source.

Hydrated Lime: ASTM C 207, Type S.

Sand: ASTM C 144, except graded with 100% passing the No. 16 sieve for 1/4 in. and narrower joints.

Water: Clear and free of deleterious materials which would impair the work.

Setting Bed Mortar: Proportions of materials in setting bed mortar mix shall be as specified in ASTM C 270 for Type N mortar compatible with limestone.

Pointing Mortar: Mortar for pointing shall be as specified for setting bed mortar with the addition of a color additive. Mortar color shall match color of limestone.

Components of mortar mix, including coloring additives, shall be non-staining.

Mortars for installation of previously salvaged limestone and marble sections shall match existing mortars in place. The Government shall furnish granulated samples for composition and color analysis/testing by the Contractor.

PART 3 EXECUTION

3.1 EXAMINATION

Require Installer to examine surfaces to receive stonework and conditions under which stonework will be installed and to report in writing any conditions which are not in compliance with requirements. Do not proceed with installation until surfaces and conditions comply with requirements indicated or for execution of other work which affects stonework.

3.2 PREPARATION

Advise Installers of other work above specific requirements relating to placement of inserts, reglets and similar items which will be used by Stonework Installer for anchoring, supporting and flashing of stonework. Furnish Installers of other work with drawings or templates showing locations of these items.

Clean stone surfaces which have become dirty or stained prior to setting to remove soil, stains and foreign materials. Clean stones by thoroughly scrubbing stones with fiber brushes followed by a thorough drenching with clear water. Use only mild cleaning compounds that contain no caustic or harsh filler or abrasives.

3.3 INSTALLATION OF PREVIOUSLY SALVAGED LIMESTONE AND MARBLE SECTIONS

Set stone in accordance with Drawings and approved Submittals. Provide anchors, supports, fasteners and other attachments shown or necessary to secure stonework in place. Shim and adjust accessories for proper setting of stone. Completely fill holes for anchors and dowels with mortar during setting of stone.

Stone shall not be dropped upon or slid over masonry, nor shall hammering or turning of stones on the masonry be allowed. Stones shall be carefully set without jarring the stone already laid, and they shall be handled with a lewis or other appliance which will not cause disfigurement.

Joints shall be completely filled with mortar and shall then be raked out to one-third the depth of the stone. Raked joints shall be brushed clean, wetted thoroughly before applying fresh mortar, and pointed with mortar.

Joint widths and finish/tooling shall match existing.

Completed joints shall be smooth and free of cracks.

Mortar shall be mixed in batch machine mixer for at least two minutes for each batch. Mortar shall be used within fifteen minutes after mixing. No retempering will be permitted.

3.4 POINTING

Face joints shall be pointed with colored pointing mortar before mortar sets. Joints shall be prepared for pointing by raking them out to depth of one and one-half times the average width of joint. Face surfaces of stones

shall not be smeared with mortar forced out of joints or that used in pointing.

Joints not pointed when stone is laid shall be thoroughly wet with clean water and filled with mortar, driven into joints and finished with approved pointing tool. Wall shall be kept wet while pointing is being done. In hot or dry weather, pointed masonry shall be protected from sun and kept wet for three days after completion.

After pointing is completed and mortar has set, exposed surfaces shall be cleaned of loose mortar and cement stains.

3.5 ADJUSTING, CLEANING, AND SEALING

Remove and replace stonework of the following description:

1. Broken, chipped, stained or otherwise damaged stones.
2. Defective joints.
3. Stonework not complying with other requirements indicated.

Replace in manner which results in stonework matching approved samples and field-constructed mock-ups, complying with other requirements and showing no evidence of replacement.

Apply stone-source recommended sealer in one or two coats as recommended by sealer manufacturer for type of stone chosen.

-- End of Section --

SECTION 09620

RESILIENT ATHLETIC FLOORING

PART 1 GENERAL

1.1 REFERENCES

The publications listed below form a part of this specification to the extent referenced. The publications are referred to in the text by basic designation only.

AMERICAN SOCIETY FOR TESTING AND MATERIALS (ASTM)

ASTM C 920	(1995) Elastomeric Joint Sealants
ASTM D 412	(1997a) Vulcanized Rubber and Thermoplastic Rubbers and Thermoplastic Elastomers - Tensio

1.2 SUBMITTALS

Government approval is required for submittals with a "GA" designation; submittals having an "FIO" designation are for information only. The following shall be submitted in accordance with Section 01330 SUBMITTAL PROCEDURES:

SD-01 Data

Resilient Athletic Flooring and Accessories; FIO.

Manufacturer's descriptive data and catalog cuts indicating materials of construction and physical characteristics. Installation, cleaning and maintenance instructions shall be included.

SD-04 Drawings

Resilient Athletic Flooring and Accessories; GA.

Drawings showing game lines, location of anchor plate assemblies, floor outlets, and under-floor conduit or raceways.

SD-13 Certificates

Resilient Athletic Flooring and Accessories; FIO.

Manufacturer's certificates stating that the resilient athletic flooring materials conform to the specified requirements. Labels or markings affixed to manufacturer's products attesting that products meet requirements specified herein will be accepted in lieu of certificates.

SD-14 Samples

Resilient Athletic Flooring and Accessories; GA.

Three samples minimum 9 x 11 inches of each color of flooring material required.

1.3 QUALIFICATIONS

Adhesive applied and poured-in-place flooring shall be installed by an experienced floor applicator approved by the manufacturer.

1.4 DELIVERY, STORAGE, AND HANDLING

Materials shall be delivered in manufacturer's original unopened containers with labels intact. Materials shall not be delivered to the installation area or installed before all work that may damage the materials or the finished floor, such as overhead work, is completed. Materials shall be stored in a clean, dry area. Materials in storage shall be maintained at temperatures recommended by the manufacturer. Protection boards shall be stored flat and off the ground.

1.5 WARRANTY

Manufacturer's standard performance guarantees or warranties that extend beyond a one year period shall be provided.

1.6 EXTRA MATERIALS

PART 2 PRODUCTS

2.1 SHEET RUBBER FLOORING - WEIGHT USE AREAS

Sheet rubber flooring shall be prefabricated, calendered and vulcanized with a base of natural and synthetic rubbers, and shall be minimum 3/8 inch thick, and shall have smooth finish. Flooring shall be roll type not less than 72 inches wide. Flooring shall be manufactured in two layers which are vulcanized together. The shore hardness of the lower layer shall be less than the upper layer. Flooring shall have a minimum tensile strength of 550 psi and a minimum elongation at break of 225 percent when tested in accordance with ASTM D 412.

Synthetic Surfacing shall be resilient, multipurpose, elastic surfacing system equal to "Sport Impact", manufactured by Mondo Rubber International, Quebec, Canada, H7L 3S8.

1. Provide manufacturer's standard reducer strip .
2. Colors will be as specified in Section 09915 COLOR SCHEDULE.
3. Refer to Drawings for patterns.

2.2 SHEET RUBBER FLOORING - ACTIVITY AREAS

Sheet rubber flooring shall be prefabricated, homogeneous, natural and synthetic rubbers, and shall be minimum 3/8 inch thick, and shall have a

hammered finish. Flooring shall be roll type not less than 72 inches wide. Flooring shall have a minimum tensile strength of 1,500 psi and a minimum ultimate elongation of 490 percent when tested in accordance with ASTM D 2240.

Synthetic Surfacing shall be resilient, multipurpose, elastic surfacing system equal to "Ramflex", manufactured by Mondo Rubber International, Quebec, Canada, H7L 3S8.

1. Provide manufacturer's standard reducer strip .
2. Colors will be as specified in Section 09915 COLOR SCHEDULE.
3. Refer to Drawings for patterns.

2.3 RESILIENT MAT UNDERLAY

Resilient mat underlay shall be 12 mm thick, dual durometer, vulcanized and calendered, equal to Baselast underlayment, as manufactured by Mondo America, Inc., or approved equal.

2.4 WRESTLING MAT MAT UNDERLAY

Wrestling mat underlay shall be 0.050 inch thick, fiberglass reinforced membrane, equal to Everlay Type A, as manufactured by Mondo America, Inc., or approved equal.

2.5 ADHESIVES

Adhesive shall be as recommended by the flooring manufacturer and must correspond to the specified flooring product and to the substrate.

2.6 CRACK FILLER/LEVELER FOR CONCRETE SURFACES

Crack filler/leveler for concrete floor surfaces shall be as recommended by flooring manufacturer.

2.7 EDGING STRIPS

Strips shall be of the same material and design as recommended by flooring manufacturer.

2.8 PRIMER

Concrete primer shall be as recommended by flooring manufacturer and must correspond to the specified flooring product and to the substrate.

2.9 GAME LINE MATERIAL

Game line material shall as recommended by the flooring manufacturer and must correspond to the specified flooring product.

2.10 FLOORING MATERIAL BASE

Where indicated on the Drawings or scheduled provide flooring material extending up wall to height indicated, or where not indicated 4 inches to

form base. Height shall be uniform throughout room. Bottom edge shall fit tightly to floor forming 90 degree corner. Provide resilient black J trim at top edge to capture edge of flooring material. J trim attachment surfaces shall be adhered to substrate and concealed in the finished work.

2.11 SEALANTS

Sealants shall be in accordance with Section 07900 JOINT SEALING, and as recommended by manufacturer.

PART 3 EXECUTION

3.1 PREPARATION

Concrete surfaces shall be completely cured and dry. No curing agents, sealers, or hardeners shall be used to aid in the curing of the concrete slab. Surfaces shall be free of paint spots, and other foreign materials. Surfaces shall be ground down or leveled with an approved leveling compound to a tolerance of plus or minus 1/8 inch within a 10 foot radius. Cracks, construction joints, or damaged portions of floor shall be filled with crack filler for concrete surfaces. Expansion joints shall be filled and sealed in accordance with the approved installation instructions of the manufacturer. All sealants shall be in accordance with ASTM C 920. Expansion joints shall not be filled with a material that will make them inoperable.

3.2 MOISTURE TEST

The suitability of the concrete subfloor for receiving the resilient flooring with regard to moisture content shall be determined by a moisture test as recommended by the flooring manufacturer.

3.3 INSTALLATION

3.3.1 General Requirements

Installation shall be in accordance with the approved installation instructions. Tile or sheet flooring shall be rolled with a medium-sized roller in both directions to release entrapped air.

3.3.2 Molded Rubber Base

Provide mitered corners, returns and intersections. J trim shall be neatly mitered. Taper cut floor system to permit tight fitting joints at the finish face properly supported by flooring material system. Adhere edges of corners, returns and intersections. Orient adjacent sections to maintain grain or pattern around corners.

3.3.3 Rubber Athletic Flooring

Do not install flooring until jobsite conditions and subfloor preparations are completed.

Sheet flooring shall be dry cut and laid out flat a minimum of 24 hours

prior to adhering to the substrate.

Cut flooring to size using methods approved by manufacturer. Mix and apply adhesive using methods as instructed by flooring manufacturer.

3.3.4 Resilient Mat Underlay

The resilient mat underlay shall be unrolled and allowed to relax prior to cutting or fitting. Mat shall be installed in accordance with manufacturers instructions.

3.3.5 Wrestling Mat Underlay

The wrestling mat underlay shall be unrolled and allowed to relax prior to cutting or fitting. Mat shall be installed in accordance with manufacturers instructions.

3.4 PROTECTION

The installed flooring shall be protected from soiling and damage with heavy reinforced, nonstaining kraft paper, plywood, or hardboard sheets as required. Edges of kraft paper protection shall be lapped and secured to provide a continuous cover. Protective covering shall be removed when directed by the Contracting Officer.

-- End of Section --

SECTION 09640

WOOD STRIP FLOORING

PART 1 GENERAL

1.1 REFERENCES

The publications listed below form a part of this specification to the extent referenced. The publications are referred to in the text by basic designation only.

MAPLE FLOORING MANUFACTURERS ASSOCIATION (MFMA)

MFMA-01	(1997) Spec Data Sheet; Wood Flooring, Maple

NATIONAL COLLEGIATE ATHLETIC ASSOCIATION (NCAA)

NCAA Rules	(2000) National Collegiate Athletic Association, Basketball Men's and Women's Rules and Interpretations

UNITED STATES BADMINTON ASSOCIATION (USBA)

USBA Rules	(1998) Official United States Badminton Rules

UNITED STATES VOLLEYBALL ASSOCIATION (USVA)

USVA Rules	(1999-2000) Official United States Volleyball Rules

INTERNATIONAL HANDBALL FEDERATION (IHF)

IHF Rules	(1997) Rules of the Gam

1.2 SYSTEM DESCRIPTION

This specification is written to allow the Contractor to build wood strip floorings for gymnasiums,and special purpose room applications. Work shall include all flooring, subflooring, substrate preparations, wall base. finishing, and game lines.

1.3 SUBMITTALS

Government approval is required for submittals with a "GA" designation; submittals having an "FIO" designation are for information only. The following shall be submitted in accordance with Section 01330 SUBMITTAL PROCEDURES:

SD-01 Data

Flooring Systems; GA

Submit manufacturer's standard product data for each type of flooring system used.

SD-04 Drawings

Wood Floors; GA

Submit shop drawings showing layout of each wood flooring system. Shop drawings shall include measured layouts and details for all painted game lines. Provide details for all systems, including expansion joint detail .

SD-06 Instructions

Installation; FIO.

Manufacturer's descriptive data and installation instructions.

SD-14 Samples

Strip Flooring; GA.

Two samples of each type of strip flooring, minimum of 12 inches x 12 inches with proposed finish.

1.4 DELIVERY AND STORAGE

Materials shall be delivered to the site in original unopened packages, bundles or containers and with all labels intact. Flooring shall be stored in fully covered, well ventilated areas and protected from extreme changes in temperature and humidity. Flooring shall be maintained at an average moisture content of 6 to 9 percent. Temperature and humidity in the storage area shall closely approximate the temperature and humidity of the rooms in which the flooring is to be installed.

1.5 ENVIRONMENTAL CONDITIONS

Rooms where wood flooring is to be installed shall have permanent heating and air conditioning installed and working or adequate arrangements for ventilation and temperature controls. The temperature shall be maintained at 55 to 80 degrees F and the humidity shall be maintained as recommended by the manufacturer] starting not less than 3 days prior to beginning the installation of flooring and continuing throughout the remainder of the contract period.

1.6 SCHEDULING

Strip flooring work shall be scheduled after any other work which would raise the moisture content of the flooring or damage the finished surface of the flooring.

PART 2 PRODUCTS

2.1 RESILIENT PADS

Resilient pads shall be pneumatic rubber, PVC, or polyurethane resilient mounts to fit the selected floor system.

2.2 WALL BASE

Wall base shall be 3/4 inch heavy-duty molded, vented rubber cove with premolded outside corners and inside corners. Provide black color.

2.3 MOISTURE BARRIER

Moisture barrier shall be 6 mil minimum thickness polyethylene.

2.4 CLIPS, ANCHOR CHANNELS AND INSULATION

Galvanized steel clips for steel channel anchorage systems shall be in accordance with steel channel anchorage system manufacturer's recommendations. Clips shall be designed to provide holding at least equal to the nailing specified and shall function without splitting the assembled boards or otherwise reducing the performance of the floor. Anchor channels shall be as recommended by the flooring manufacturer. Anchor channels shall be galvanized, complete with all pads, anchors and other components required for channel installation. Underfloor insulation shall be asphalt impregnated fiberboard or closed-cell polyethylene foam.

2.5 FLOOR SYSTEMS - GENERAL PERFORMANCE CRITERIA

2.5.1 General

Floor systems shall conform to a set of standards developed by the German Institute of Standardization referred to as "DIN".

2.5.2 Performance Standards

Floor systems shall conform to the following DIN Standards:

1. Shock Absorption Standard: Minimum as indicated below for each type of floor.
2. Standard Determination Deflection: Minimum 2.3 mm or 0.091 in.
3. Deformation Control: 15% maximum.
4. Ball Bounce: Minimum as indicated below for each type of floor.
5. Rolling Load: 337.6 lb.

2.6 WOOD FLOORING SYSTEMS - FLOOR TYPE 1A AND 1B

Wood Flooring system Type 1A and 1B shall be an anchored, DIN Certified System, meeting the performance criteria specified in paragraph 2.5 above, and as follows:

1. Shock Absorption: 59% minimum.
2. Ball Bounce: 93%.

Provide one of the following resilient wood flooring systems with the performance characteristics and materials required:

1. "Bio-Channel Star (formerly "Bio-Channel II"), manufactured by Robbins Sports Surfaces, Cincinnati, OH 45226.
2. Approved equal.

2.6.1 Flooring System Type 1A and 1B System Components:

1. Moisture Barrier: At Type 1A only.
2. Channels: 1-3/8 inch x 2-5/8 inch x 8 ft. factory assembled steel encased treated wood sleepers. Sleepers shall be free to move vertically within steel channel confines to assure proper uniformity of resiliency and function.
3. Subfloor: 1 layer of 23/32 inch APA Rated Sheathing, Exposure 1, Fir or Southern Pine, Profiled Load Distribution Plywood Subfloor.
4. Flooring Fasteners: 1-3/4 inch barbed cleats.
5. Subfloor Fasteners: 1-1/2 inch or 1-5/8 inch subflooring nails or staples.
6. Channel Anchors: 1-1/4 inch long steel, powder actuated or pneumatic anchors.
7. Strip Flooring: Strip flooring shall be 25/32 inch thick by 2-1/4 inches face width, kerfed,kiln dried, continuous tongue and groove, and EM, and of standard lengths Northern Hard Maple. Hard maple shall be Second and Better in accordance with MFMA-01. Strip flooring shall be marked with the trademark of the grading agency.
8. Treatment: Wood flooring shall be treated with manufacturer's standard preservative treatment.

2.7 WOOD FLOORING SYSTEMS - FLOOR TYPE 2

Wood Flooring Type 2: Wood Flooring System Type 2 shall be DIN Certified system, meeting the performance criteria specified in Paragraph 2.5 above, with the following exceptions:

1. Shock Absorption: 64% minimum.
2. Ball Bounce: 90%.
3. Standard Deflection at Point of Impact: 2.6 mm.
4. Deformation Control: 25% maximum.

Provide one of the following resilient wood flooring systems or approved equal with the performance characteristics and materials required:

1. "Neo-Shok (Black - 50)" system, manufactured by Connor AGA, Amasa, MI 49903.
2. Bio-Star" (Formerly "Bio-Cushion III"), manufactured by Robbins Sports Surfaces, Cincinnati, OH 45226.
3. Super-Aire II-DC" as manufactured by Superior Floor Co.

2.7.1 Flooring System Type 2 System Components:

1. Resilient Pads: Manufacturer's standard 3/4 inch resilient pads.
2. Subfloor: 2 layers of 15/32 inch APA Rated Sheathing, Exposure 1, Fir or Southern Pine, Profiled Load Distribution Plywood Subfloor.
3. Flooring Fasteners: 2 inch barbed cleats.
4. Subfloor Fasteners and Adhesive: 1 inch length, 7/16 inch crown coated staples or equal; Construction adhesive, PL400 or equal.
5. Strip Flooring: Strip flooring shall be 25/32 inch thick by 2-1/4 inches face width, kerfed,kiln dried, continuous tongue and groove, and EM, and of standard lengths Northern Hard Maple. Hard maple shall be Second and Better in accordance with MFMA-01. Strip flooring shall be marked with the trademark of the grading agency.
6. Treatment: Wood flooring shall be treated with manufacturer's standard preservative treatment.

2.8 WOOD FLOORING TREATMENT AND FINISHING MATERIALS

2.8.1 General

Provide treatment and finishing materials that have been tested and listed as conforming to industry standards by MFMA.

2.8.2 Treatment

Treat all flooring with MFMA tested and listed wood preservative. Stamp each bundle with official treating plant certificate and number.

2.8.3 Finish Materials

Provide manufacturer's oil modified polyurethane sealer and finish, or Architect approved equal.

2.9 GAME LINES

Provide game-line paints as recommended by finishing materials manufacturer to be compatible with finish.

Provide game lines of the required layouts and colors at each area required to receive game lines. Game line layouts shall conform to the requirements of the required standards. All lines shall be 2 inches wide unless required otherwise.

Game lines shall have the following priorities:

1. Varsity Basketball Court shall be first priority;
2. All other Basketball Courts shall be second priority;
3. Volleyball Courts shall be third priority;
4. Team Handball Courts shall have fourth priority;
5. All other lines shall be fifth priority.

Higher priority lines shall overlay lower priority lines. Provide multiple masks as required to provide full contact between abutting lines and colors.

Where colors are indicated they shall be subject to Review and Adjustment

as required by Section 09915 COLOR SCHEDULE.

2.9.1 Room Y240 Gymnasium

A. Provide three (3) NCAA competition standard basketball courts in compliance with NCAA Rules of 84 feet long by 50 feet wide and shall include all required lines except restraining lines and coaching boxes. Court lines shall be black, lane space marks shall be green.

B. Provide three (3) USVA competition standard volleyball courts in compliance with USVA Rules of 59 feet (18 meters) long by 29.5 feet (9 meters) wide. Court lines shall be red.

C. Provide one (1) IHF competition standard team handball court in compliance with IHF Rules of 131.25 feet (40 meters) long by 65.58 feet (20 meters) wide. Court lines shall be white.

D. Provide 8 standing long jump lanes as detailed. Lines shall to be yellow.

E. Provide at each basketball goal that is not part of a competition court layout one free throw line, 12 feet long by 2 inches wide, 15 feet from face of backboard, parallel to backboard, and centered on goal. Line shall be yellow.

F. Provide six (6) competition USBA standard Badminton courts in compliance with USBA Rules of 20 ft. wide by 44 ft. long. Only line intersections, "elbow corners", "T's" and "+" are to be painted using 6 in. long segments. Courts shall include line intersections for both doubles and singles play. Three courts shall be positioned equally over each of the two western most Basketball courts in Room Y240. Line segments shall be yellow.

2.9.2 Room Y440 Gymnasium

A. Provide three (3) NCAA competition standard basketball courts in compliance with NCAA Rules of 94 feet long by 50 feet wide and shall include all require lines except restraining lines and coaching boxes. Court lines shall be black, lane space marks shall be green.

B. Provide three (3) USVA competition standard volleyball courts in compliance with USVA Rules of 59 feet (18 meters) long by 29.5 feet (9 meters) wide. Court lines shall be red.

C. Provide one (1) IHF competition standard team handball court in compliance with IHF Rules of 131.25 feet (40 meters) long by 65.58 feet (20 meters) wide. Court lines shall be white.

D. Provide at each basketball goal not part of a competition court layout one free throw line, 12 feet long by 2 inches wide, 15 feet from face of backboard, parallel to backboard, and centered on goal. Line shall be yellow.

PART 3 EXECUTION

3.1 SURFACE CONDITIONS

Concrete slab shall be level, steel troweled to a tolerance of 1/8 inch plus or minus in a 10 foot radius. Slab surface shall be clean, dry, and approved prior to start of installation. The slab shall be depressed as required by the floor specified.

3.2 INSTALLATION

Flooring shall be installed in accordance with the approved installation instructions of the manufacturer. Unless otherwise approved, flooring shall be laid parallel to the length of the area to be floored. Strips shall be laid in accordance with manufacturer's instructions. End joints shall be so alternated that there will be at least two boards between end joints in the same plane and at least 6 inches between end joints in adjacent boards. Space for expansion shall be left along perimeter walls and around fixed projections through the floor surface. Unless otherwise shown or permitted by the approved installation instructions, expansion space shall be as recommended by flooring system manufacturer.

3.2.1 Installation of Wood Floor Type 1A and 1B

A. Inspect concrete subfloors for proper tolerance and dryness, and report any discrepancies to the Contracting Officer in writing.

B. All work required to put the concrete subfloors in acceptable condition shall be the responsibility of the General Contractor.

C. Installation:

1. Place polyethylene film over concrete subfloor overlapping edges 6 in. minimum.
2. Place galvanized steel channels 16 inches O.C. end to end, staggering end joints in adjacent rows.
3. Anchor galvanized steel channels at predetermined locations using powder actuated or pneumatic anchoring method. Note: Anchor sleepers in 3 of the pre-determined holes, at both ends and in center. When shimming for leveling is necessary, anchor in all 5 holes
4. Install 3/4 inch (23/32 inch) plywood subfloor parallel to sleeper channels and securely fasten subfloor 6 inches O.C. along each channel sleeper.
5. Machine fasten maple flooring 10-12 inch O.C., perpendicular to sleeper channels with end joints properly driven up and provide proper spacing for humidity conditions in specific regions. Provide 2 inch expansion void at perimeter and at all vertical obstructions.

3.2.2 Installation of Wood Floor Type 2

A. Inspect concrete subfloors for proper tolerance and dryness, and report any discrepancies to the Contracting Officer in writing.

B. All work required to put the concrete subfloors in acceptable condition shall be the responsibility of the General Contractor.

C. Installation:

1. Install polyethylene with joints lapped a minimum of 6 inches.
2. Install manufacturer's standard resilient pads, minimum of 32 pads per sheet, on underside of lower plywood subfloor.
3. Install the lower plywood subfloor perpendicular to the intended finish flooring direction. All joints shall be staggered and spaced 1/4 inch apart.
4. Install the upper plywood subfloor diagonal to the lower subfloor panels staggering joints and spacing 1/4 inch apart. Secure these panels using adhesive and 1 inch staples placed 6 inches O.C. at panel perimeter and 12 inches O.C. throughout interior.
5. Machine nail maple finish flooring 10 inches to 12 inches O.C. with end joints properly driven up and proper spacing provided for humidity conditions in specific regions. Provide 2 inch expansion voids at the perimeter and at all vertical obstructions.

3.3 SANDING

Flooring shall be sanded to a smooth, even, uniform finish without burns in accordance with MFMA Standards. A minimum of three sanding cuts, each with a finer sandpaper, shall be made. A heavy drum-type sander shall be used for floors, except a disc-type sander will be permitted for the final cut on strip flooring. Either the first pass or the second pass of the drum-type sander shall be at an angle of 45 degrees to the grain; other passes of the drum-type sander shall be in the direction of the grain of strip flooring. Edges not reached by the sander shall be finished with an edger or by hand methods. After sanding with the drum sander, buff entire floor using 100 grit screenback or equal grit sandpaper with a heavy buffing machine. The final sanding shall be performed at a time and in a manner that will permit application of the first seal coat to be completed within 8 hours after completion of sanding. The flooring shall be left clean and ready to receive the finishing materials.

3.4 Finishing

Apply sealers and finishes using manufacturer's standard four-coat system (two coats of sealer, two coats of finish). Ensure uniform appearance of new flooring.

Steel wool and vacuum between each coat as recommended by MFMA.

Apply game lines and solid painted areas accurately after seal coats have been applied, and prior to application of finish coats..

1. Layout game lines according to referenced standards, details indicated on Drawings, and as required to provide competition ready court .
2. Layout lines to provide full contact between abutting colors. Provide multiple masks for edge work to provide accurate, sharp line edges without bleeding or edge build-up.

3. Provide curved edges of true radius without segmenting.
4. Provide 12 feet in diameter United States Military Academy Crest. Crest shall be located as directed by Contracting Officer within Room Z360-Gymnasium. Provide up to ten (10) custom colors. Artwork will be provided by Contracting Officer for enlargement and layout by Contractor.

3.5 BASE INSTALLATION

At all spaces receiving wood flooring, provide full perimeter vented vinyl base. Base shall be installed after wood floor finish has fully cured, but not sooner than 14 days after completion of floor finish work. Base shall extend the full perimeter of the room and return to door frames, window frames and the like. Prefabricated corners shall be used whenever possible. Provide tight fitting joints. Provide full manufactured lengths when ever possible, but no length less than 24 inches except where acceptable to Contracting Officer. Adhere base to wall construction with venting grooves to wall. Maintain venting grooves clear of adhesive.

3.6 PROTECTION

From the time of installation until final acceptance, flooring shall be protected from damage.

-- End of Section --

SECTION 09650

RESILIENT FLOORING

PART 1 GENERAL

1.1 REFERENCES

The publications listed below form a part of this specification to the extent referenced. The publications are referred to in the text by basic designation only.

AMERICAN SOCIETY FOR TESTING AND MATERIALS (ASTM)

ASTM D 4078	(1992; R 1996) Water Emulsion Floor Polish
ASTM E 648	(1997) Critical Radiant Flux of Floor-Covering Systems Using a Radiant Heat Energy Source
ASTM E 662	(1995) Specific Optical Density of Smoke Generated by Solid Materials
ASTM F 1066	(1995a) Vinyl Composition Floor Tile

1.2 FIRE RESISTANCE REQUIREMENTS

Flooring in corridors and exits shall have a minimum average critical radiant flux in watts per square centimeter when tested in accordance with ASTM E 648, as specified in Part 2 of this Specification. The smoke density rating shall be less than 450 when tested in accordance with ASTM E 662.

1.3 SUBMITTALS

Government approval is required for submittals with a "GA" designation; submittals having an "FIO" designation are for information only. The following shall be submitted in accordance with Section 01330 SUBMITTAL PROCEDURES:

SD-01 Data

Resilient Flooring and Accessories; GA.

Manufacturer's descriptive data and installation instructions including cleaning and maintenance instructions.

SD-09 Reports

Resilient Flooring and Accessories; FIO.

Copies of test reports showing that representative product samples of the flooring proposed for use have been tested by an independent testing laboratory within the past three years or when formulation change occurred and conforms to the requirements specified.

SD-14 Samples

Resilient Flooring and Accessories; GA.

Three samples of each indicated color and type of flooring and base. Sample size shall be minimum 2-1/2 x 4 inches.

1.4 DELIVERY AND STORAGE

Materials shall be delivered to the building site in original unopened containers bearing the manufacturer's name, project identification, and handling instructions. Materials shall be stored in a clean dry area with temperature maintained above 70 degrees F for 2 days prior to installation, and shall be stacked according to manufacturer's recommendations. Materials shall be protected from the direct flow of heat from hot-air registers, radiators and other heating fixtures and appliances.

1.5 ENVIRONMENTAL REQUIREMENTS

Areas to receive resilient flooring shall be maintained at a temperature above 70 degrees F and below 100 degrees F for 2 days before application, during application and 2 days after application. A minimum temperature of 55 degrees F shall be maintained thereafter.

1.6 SCHEDULING

Resilient flooring application shall be scheduled after the completion of other work which would damage the finished surface of the flooring.

1.7 WARRANTY

Manufacturer's standard performance guarantees or warranties that extend beyond a one year period shall be provided.

1.8 EXTRA MATERIALS

Extra flooring material of each color and pattern shall be furnished at the rate of 5 tiles for each 1000 tiles and 5 square feet for each 1000 square feet of sheet flooring] installed. Extra materials shall be from the same lot as those installed. Extra base material composed of 20 linear feet of each color shall be furnished.

PART 2 PRODUCTS

2.1 VINYL-COMPOSITION TILE

Vinyl-composition tile shall conform to ASTM F 1066, Class 2,(through

pattern tile), Composition 1, asbestos-free, and shall be 12 inchessquare and 1/8 inch thick. Tile shall have the color and pattern uniformly distributed throughout the thickness of the tile. Flooring in any one continuous area shall be from the same lot and shall have the same shade and pattern. Wear surface shall be flat, non-embossed.

2.2 RUBBER FLOORING

2.2.1 Sheet Rubber Flooring

Provide prefabricated commercial rubber sheet flooring of 0.080 inch (2 mm) thickness in 6 foot widths. Lengths shall be as long as practicable, but not less than the minimum dimension of any room scheduled to receive rubber sheet flooring. Sheet rubber flooring shall be composed of 100 percent synthetic virgin styrene butadiene rubber, mineral aggregates, organic stabilizers and fade resistant pigmentation complying with Federal Specification SS-T-312B, Type II and further complying with requirements below. Rubber sheet flooring shall be of homogeneous construction and suitable for heat welding of seams with a weight of 0.62 pounds per square foot. Wear face shall be embossed.

2.2.2 Performance Requirements

Sheet rubber flooring shall provide the following performance as tested in addition to the requirements in paragraph 2.2.1 above;

Physical Propert	Standar	Specification
Inflammability	ASTM E-648	0.80 watts Class I
Hardness A	ASTM D-2240	87 (+/-5)
Taper Abrasion, wheel H-18 500 gr. 1000 cycles	ASTM C-501	0.33 g/kc 1.13 percent
Modulus 100 percent	ASTM D412	990.1 psi
Tensile Strength	ASTM D-412	1366.3 psi
Elongation	ASTM D-412	239.3 percent
Water Absorption 24h/23 degrees C	ASTM D-570	0.54 percent
Coefficient of Friction	ASTM D-2047	0.73 dry, 0.97 wet

2.2.3 Welding Rods

Provide welding rods of composition as recommended by sheet rubber flooring manufacturer to provide thorough heat welding of all seams. Welding rods shall be in colors required to match colors of base matrix.

2.3 RESILIENT REDUCERS AND TRANSITIONS

Provide resilient floor reducers and transitions between all dissimilar floor finish materials including exposed concrete. Resilient floor reducers and transitions shall be single piece, factory formed solid extrusions of rubber and vinyl and shall match resilient base material and color in each room. If no resilient base is present, reducers and transitions shall be rubber, black in color. Reducers and transitions shall provide a smooth, low angle tapered wear surface between the finished faces of abutting floor finishes to permit easy rolling of small wheeled traffic. Reducers and transitions may be omitted where terrazzo products abut ceramic tile products and where metal thresholds are specified.

2.4 RESILIENT BASE

Base shall be manufacturers standard vinyl, straight style (installed with carpet), and coved style (installed with other flooring). Base shall be 4 inches high as scheduled, and a minimum 1/8 inch thick. Preformed outside corners shall be furnished.

2.5 VENTED RUBBER BASE

Vented wall base shall be 3/4 inch heavy-duty molded, vented rubber cove with premolded outside corners and inside corners. Provide black color.

2.6 ADHESIVE

Adhesive for flooring and wall base shall be as recommended by the flooring manufacturer.

2.7 POLISH

Polish shall conform to ASTM D 4078, and shall be as recommended by the flooring manufacturer.

2.8 CAULKING AND SEALANTS

Caulking and sealants shall be in accordance with Section 07900 JOINT SEALING.

2.9 MANUFACTURER'S COLOR AND TEXTURE

Color and texture shall be in accordance with Section 09915 COLOR SCHEDULE.

PART 3 EXECUTION

3.1 EXAMINATION/VERIFICATION OF CONDITIONS

The Contractor shall examine and verify that site conditions are in agreement with the design package and shall report all conditions that will prevent a proper installation. The Contractor shall not take any corrective action without written permission from the Government.

3.2 SURFACE PREPARATION

Flooring and walls shall be in a smooth, true, level plane, except where floors indicated as sloped, and walls are indicated as CMU. Before any work under this section is begun, all defects such as rough or scaling concrete, low spots, high spots, and uneven surfaces shall have been corrected, and all damaged portions of concrete slabs shall have been repaired as recommended by the flooring manufacturer. Concrete curing compounds, other than the type that does not adversely affect adhesion, shall be entirely removed from the slabs. Paint, varnish, oils, release agents, sealers, waxers, and adhesives shall be removed, as recommended by the flooring manufacturer.

3.3 MOISTURE TEST

The suitability of the concrete subfloor for receiving the resilient flooring with regard to moisture content shall be determined by a moisture test as recommended by the flooring manufacturer.

3.4 INSTALLATION OF VINYL-COMPOSITION TILE

Tile flooring shall be installed in parquet pattern with adhesive in accordance with the manufacturer's installation instructions. Tile lines and joints shall be kept square, symmetrical, tight, and even. Edge width shall vary as necessary to maintain full-size tiles in the field, but no edge tile shall be less than one-half the field tile size, except where irregular shaped rooms make it impossible. Flooring shall be cut to, and fitted around, all permanent fixtures, built-in furniture and cabinets, pipes, and outlets. Edge tile shall be cut, fitted, and scribed to walls and partitions after field flooring has been applied.

3.5 INSTALLATION OF RUBBER FLOORING

Rubber flooring shall be installed with grain or pattern running in the same direction, with adhesive in accordance with the manufacturer's written installation instructions. Lines and joints shall be kept square, symmetrical, tight, and even. Edge width shall vary as necessary to maintain full-size sheets in the field, but no edge pieces shall be less than one-half the field size, except where irregular shaped rooms make it impossible. Flooring shall be cut to, and fitted around, all permanent fixtures, built-in furniture and cabinets, pipes, and outlets. Edges shall be cut, fitted, and scribed to walls and partitions after field flooring has been applied. Seams shall be heat welded in accordance with manufacturer's instructions.

3.6 INSTALLATION OF RESILIENT BASE

Wall base shall be installed with adhesive in accordance with the manufacturer's written instructions. Base joints shall be tight and base shall be even with adjacent resilient flooring. Voids along the top edge of base at masonry walls shall be filled with sealant in color to match base.

3.7 CLEANING

Immediately upon completion of installation of tile in a room or an area,

flooring and adjacent surfaces shall be cleaned to remove all surplus adhesive. After installation, flooring shall be washed with a cleaning solution, rinsed thoroughly with clear cold water, and, except for raised pattern rubber flooring, rubber tile and sheet rubber flooring, rubber stair treads, and static control vinyl tile, given two coats of polish in accordance with manufacturers written instructions. After each polish coat, floors shall be buffed to an even luster with an electric polishing machine. Raised pattern rubber flooring, rubber tile and sheet rubber flooring, rubber stair treads, and static control vinyl tile shall be cleaned and maintained as recommended by the manufacturer.

3.8 PROTECTION

From the time of laying until acceptance, flooring shall be protected from damage as recommended by the flooring manufacturer. Flooring which becomes damaged, loose, broken, or curled shall be removed and replaced.

-- End of Section --

SECTION 09670

INDUSTRIAL FLOORING

PART 1 GENERAL

1.1 REFERENCES

The publications listed below form a part of this specification to the extent referenced. The publications are referred to in the text by basic designation only.

AMERICAN SOCIETY FOR TESTING AND MATERIALS (ASTM)

ASTM C 882	(1999) Test Method for Bond Strength of Epoxy-Resin Systems Used With Concrete by Slant Shear
ASTM D 751	(1998) Coated Fabrics
ASTM E 648	(1999) Critical Radiant Flux of Floor-Covering Systems Using a Radiant Heat Energy Source
ASTM E 662	(1995) Specific Optical Density of Smoke Generated by Solid Materials

1.2 FIRE RESISTANCE REQUIREMENTS

Flooring in corridors and exits shall have a minimum average critical radiant flux in watts per square centimeter when tested in accordance with ASTM E 648, as specified in Part 2 of this Specification. The smoke density rating shall be less than 450 when tested in accordance with ASTM E 662.

1.3 SUBMITTALS

Government approval is required for submittals with a "GA" designation; submittals having an "FIO" designation are for information only. The following shall be submitted in accordance with Section 01330 SUBMITTAL PROCEDURES:

SD-01 Data

Flooring System; GA.

Industrial flooring manufacturer's descriptive data, mixing, proportioning, and installation instructions. Maintenance literature for resinous flooring shall be included.

SD-04 Drawings

Flooring System; FIO.

Drawings indicating the type and layout of the floor system.

SD-09 Reports

Testing; FIO.

Reports of tests for conductive sparkproof flooring, including analysis and interpretation of test results. Each report shall be properly identified. The test methods used shall be identified and the test results shall be recorded.

SD-13 Certificates

Flooring System; FIO.

Certificates indicating conformance with specified requirements and flooring manufacturers approval of the flooring applicator. Certificate shall be accompanied by certified test reports from an approved laboratory showing that the resinous floor coating has been tested and meets the requirements specified.

SD-14 Samples

Flooring System; GA.

Two 6 x 6 inches, (minimum) samples of each color of industrial resinous flooring.

1.4 QUALIFICATION OF APPLICATOR

Applicator shall be approved by the flooring manufacturer and shall have a minimum of 5 years experience in the application of the materials to be used.

1.5 DELIVERY AND STORAGE

Materials shall be delivered to the project site in manufacturer's original unopened containers. Materials shall be kept in a clean, dry, area with temperatures controlled between 50 to 90 degrees F.

1.6 ENVIRONMENTAL REQUIREMENTS

Areas to receive industrial flooring shall have the slab and atmosphere maintained at a temperature above 50 degrees F for 2 days prior to installation and for 7 days following installation.

PART 2 PRODUCTS

2.1 INDUSTRIAL FLOORING

Industrial latex-based flooring shall be Dex-O-Tex M-E Flooring, Type NR, or approved equal; trowel applied type finish of 3/16 inch thickness with properties and chemical resistance conforming to the requirements specified herein.

2.2 PHYSICAL CHARACTERISTICS OF MEMBRANE COMPONENT

2.2.1 Waterproofness:

Suspended sample subjected to 2 ft. water head for 40 hrs, per ASTM D 751; Results: No moisture penetration.

2.2.2 Tensile Strength:

ASTM D 751; Result 283 psi.

2.2.3 Elongation:

ASTM D 751; Result 155%.

2.3 PHYSICAL CHARACTERISTICS OF WEAR COURSE COMPONENT

2.3.1 Adhesion:

ASTM C 882, Type 1; Results: 515 psi.

2.3.2 Shore Hardness:

ASTM D 2440; Result Durometer "A" 82.

2.3.3 Impact Resistance:

MIL-D-3134, Para. 4.7.3; Result no cracking or detachment.

2.4 PHYSICAL CHARACTERISTICS COMBINED SYSTEM

2.4.1 Thickness:

3/32 inch.

2.4.2 Flammability:

ASTM E 648, NFPA 253; Critical Radiant Flux, Greater than 1.07 Watts/cm2.

2.5 WALL BASE

2.5.1 Self-Coving

Self-coving shall consist of industrial flooring coved up at the base 4 inches at walls, curbs, penetrations and the like. Coved base shall be the same thickness as the flooring.

2.6 COLOR

Color shall be manufacturer's standard grey.

PART 3 EXECUTION

3.1 PREPARATION OF CONCRETE SUBFLOOR

Installation of the floor topping shall not commence until the concrete substrate is at least 28 days old. The concrete surfaces shall be prepared in accordance with instructions of the resin manufacturer.

3.2 MIXING, PROPORTIONING, AND INSTALLING

Mixing, proportioning, and installing shall be in accordance with the approved instructions of the manufacturer.

3.3 PROTECTION

The industrial flooring shall be covered and protected from damage until completion of the work of all other trades.

-- End of Section --

SECTION 09680

CARPET

PART 1 GENERAL

1.1 REFERENCES

The publications listed below form a part of this specification to the extent referenced. The publications are referred to in the text by basic designation only.

AMERICAN ASSOCIATION OF TEXTILE CHEMISTS AND COLORISTS (AATCC)

AATCC TM 134	(1991) Test Method: Electrostatic Propensity of Carpets

AMERICAN SOCIETY FOR TESTING AND MATERIALS (ASTM)

ASTM D 418	(1993; R 1997) Pile Yarn Floor Covering Construction
ASTM E 648	(1997) Critical Radiant Flux of Floor-Covering Systems Using a Radiant Heat Energy Source

CARPET AND RUG INSTITUTE (CRI)

CRI 104	(1996) Commercial Carpet Installation Standard

CODE OF FEDERAL REGULATIONS (CFR)

16 CFR 1630	Standard for the Surface Flammability of Carpet and Rugs (FF 1-70

1.2 SUBMITTALS

Government approval is required for submittals with a "GA" designation; submittals having an "FIO" designation are for information only. The following shall be submitted in accordance with Section 01330 SUBMITTAL PROCEDURES:

SD-01 Data

Carpet and Accessories; GA.

Manufacturer's catalog data and printed documentation stating physical characteristics, durability, resistance to fading, and flame resistance characteristics for each type of carpet material and installation accessory.

SD-04 Drawings

Installation; GA.

Three copies of drawings indicating areas receiving carpet, carpet types, textures and patterns, direction of pile, location of seams, and locations of edge molding.

SD-06 Instructions

Carpet and Accessories; FIO.

Three copies of the manufacturer's printed installation instructions for the carpet, including preparation of substrate, seaming techniques, and recommended adhesives and tapes.

SD-09 Reports

Moisture and Alkalinity Tests; FIO.

Three copies of test reports of moisture and alkalinity content of concrete slab stating date of test, person conducting the test, and the area tested.

SD-13 Certificates

Carpet and Accessories; FIO.

Certificates of compliance from a laboratory accredited by the National Laboratory Accreditation Program of the National Institute of Standards and Technology attesting that each type of carpet and carpet with cushion material conforms to the standards specified.

SD-14 Samples

Carpet and Accessories; GA.

a. Carpet: Two "Production Quality" samples 27 x 18 inches of each carpet proposed for use, showing quality, pattern, and color specified.

b. Vinyl or Aluminum Moldings: Two pieces of each type at least 12 inches long.

c. Special Treatment Materials: Two samples showing system and installation method.

SD-19 Operation and Maintenance Manuals

Carpet and Accessories; FIO.

Three copies of carpet manufacturer's maintenance instructions describing recommended type of cleaning equipment and material, spotting and cleaning methods, and cleaning cycles.

1.3 REGULATORY REQUIREMENTS

Carpet and adhesives shall bear the Carpet and Rug Institute (CRI) Indoor Air Quality (IAQ) label. Carpet type bearing the label will indicate that the carpet has been tested and meets the criteria of the CRI IAQ Carpet Testing Program, and minimizes the impact on indoor air quality.

1.4 DELIVERY AND STORAGE

Materials shall be delivered to the site in the manufacturer's original wrappings and packages clearly labeled with the manufacturer's name, brand name, size, dye lot number, and related information. Materials shall be stored in a clean, dry, well ventilated area, protected from damage and soiling, and shall be maintained at a temperature above 60 degrees F for 2 days prior to installation.

1.5 ENVIRONMENTAL REQUIREMENTS

Areas in which carpeting is to be installed shall be maintained at a temperature above 60 degrees F for 2 days before installation, during installation, and for 2 days after installation. A minimum temperature of 55 degrees F shall be maintained thereafter for the duration of the contract. Traffic or movement of furniture or equipment in carpeted area shall not be permitted for 24 hours after installation. Other work which would damage the carpet shall be completed prior to installation of carpet.

1.6 WARRANTY

Manufacturer's standard performance guarantees or warranties that extend beyond a one-year period shall be provided.

1.7 EXTRA MATERIAL

Extra material from same dye lot consisting of full width continuous broadloom and shall be provided for future maintenance. A minimum of 5 percent of total square yards of each carpet type, pattern, and color shall be provided.

PART 2 PRODUCTS

2.1 CARPET TYPE 1 (CPT-1)

CPT-1 shall be Bull Market '8BM2806300', as manufactured by Bently Mills, or equal as manufactured by Atlas Carpet, Durkan Carpet, or approved equal.

Carpet shall be first quality; free of visual blemishes, streaks, poorly dyed areas, fuzzing of pile yarn, spots or stains, and other physical and manufacturing defects. Carpet materials and treatments shall be reasonably nonallergenic and free of other recognized health hazards. All grade carpets shall have a static control construction which gives adequate durability and performance.

2.1.1 Physical Characteristics

CPT-1: Carpet Type CPT-1 shall comply with the following:

a. Manufacturing Method: Multi-level loop Giotti 3D.

b. Yarn Content: Bently approved Solutia Ultron VIP Nylon.

c. Pile Height Tufted: High 0.250 inch; Medium 0.187 inch; Low 0.093 inch in accordance with ASTM D 418.

d. Machine Gauge: Minimum 5/64 inch. inch in accordance with ASTM D 418.

e. Tufted Yarn Weight: Minimum 28 ounces per square yard. This does not include weight of backings. Weight shall be determined in accordance with ASTM D 418.

f. Total Finished Weight: 63 ounces per square yard.

g. Total Finished Thickness: 0.290 inches.

h. Pattern Repeat: 18-3/4 inch wide x 37-1/2 inch long.

i. Backing Construction: Primary backing materials shall be polypropylene. Secondary backing to suit project requirements shall be woven polypropylene.

2.1.2 Performance Requirements

a. Static Control: Static control shall be provided to permanently control static buildup to less than 3.5 kV when tested at 20 percent relative humidity and 70 degrees F in accordance with AATCC TM 134.

b. Flammability and Critical Radiant Flux Requirements: Carpet shall comply with 16 CFR 1630. Carpet shall be rated Class 1 when tested in accordance with ASTM E 648.

c. Moisture Barrier: Passes British Spillage Test, Method E.

d. Wear Warranty: 10 year Warranty.

2.2 CARPET TYPE 2 (CPT-2)

CPT-2 shall be Futures '8FT2806300', as manufactured by Bently Mills, or equal as manufactured by Atlas Carpet, Durkan Carpet, or approved equal.

Carpet shall be first quality; free of visual blemishes, streaks, poorly dyed areas, fuzzing of pile yarn, spots or stains, and other physical and manufacturing defects. Carpet materials and treatments shall be reasonably nonallergenic and free of other recognized health hazards. All grade carpets shall have a static control construction which gives adequate durability and performance.

2.2.1 Physical Characteristics

CPT-2: Carpet Type CPT-2 shall comply with the following:

a. Manufacturing Method: Multi-Loop Giotti 3D.

b. Yarn Content: Bently approved Solutia Ultron VIP Nylon.

c. Pile Height Tufted: High 0.250 inch; Med. 0.187 inch; Low 0.093 inch in accordance with ASTM D 418.

d. Machine Gauge: Minimum 5/64 inch. inch in accordance with ASTM D 418.

e. Tufted Yarn Weight: Minimum 28 ounces per square yard. This does not include weight of backings. Weight shall be determined in accordance with ASTM D 418.

f. Total Finished Weight: 63 ounces per square yard.

g. Total Finished Thickness: 0.275 inches.

h. Pattern Repeat: 18-34 inch wide x 37-1/2 inch long.

i. Backing Construction: Primary backing materials shall be polypropylene. Secondary backing to suit project requirements shall be woven polypropylene.

2.2.2 Performance Requirements

a. Static Control: Static control shall be provided to permanently control static buildup to less than 3.5 kV when tested at 20 percent relative humidity and 70 degrees F in accordance with AATCC TM 134.

b. Flammability and Critical Radiant Flux Requirements: Carpet shall comply with 16 CFR 1630. Carpet shall be rated Class 1 when tested in accordance with ASTM E 648.

c. Moisture Barrier: Passes British Spillage Test, Method E.

d. Wear Warranty: 10 year Warranty.

2.3 CARPET TYPE 3 (CPT-3)

CPT-3 shall be SOHO Square '8SQ3406300', as manufactured by Bently Mills, or equal as manufactured by Atlas Carpet, Durkan Carpet, or approved equal.

Carpet shall be first quality; free of visual blemishes, streaks, poorly dyed areas, fuzzing of pile yarn, spots or stains, and other physical and manufacturing defects. Carpet materials and treatments shall be reasonably nonallergenic and free of other recognized health hazards. All grade carpets shall have a static control construction which gives adequate durability and performance.

2.3.1 Physical Characteristics

CPT-3: Carpet Type CPT-3 shall comply with the following:

a. Manufacturing Method: Precision Cut and Loop.

b. Yarn Content: Bently approved Solutia Ultron VIP Nylon.

c. Pile Height Tufted: High 0.312 inch; Low 0.250 inch in accordance with ASTM D 418.

d. Machine Gauge: Minimum 1/8 inch. inch in accordance with ASTM D 418.

e. Tufted Yarn Weight: Minimum 34 ounces per square yard. This does not include weight of backings. Weight shall be determined in accordance with ASTM D 418.

f. Total Finished Weight: 67 ounces per square yard.

g. Total Finished Thickness: 0.380 inches.

h. Pattern Repeat: 1-1/2 inch wide x 1-5/8 inch long.

i. Backing Construction: Primary backing materials shall be polypropylene. Secondary backing to suit project requirements shall be woven polypropylene.

2.3.2 Performance Requirements

a. Static Control: Static control shall be provided to permanently control static buildup to less than 3.5 kV when tested at 20 percent relative humidity and 70 degrees F in accordance with AATCC TM 134.

b. Flammability and Critical Radiant Flux Requirements: Carpet shall comply with 16 CFR 1630. Carpet shall be rated Class 1 when tested in accordance with ASTM E 648.

c. Moisture Barrier: Passes British Spillage Test, Method E.

d. Wear Warranty: 10 year Warranty.

2.4 CARPET TYPE 4 (CPT-4)

CPT-4 shall be Bryant Park '8BZ3806300', as manufactured by Bently Mills, or equal as manufactured by Atlas Carpet, Durkan Carpet, or approved equal.

Carpet shall be first quality; free of visual blemishes, streaks, poorly dyed areas, fuzzing of pile yarn, spots or stains, and other physical and manufacturing defects. Carpet materials and treatments shall be reasonably nonallergenic and free of other recognized health hazards. All grade carpets shall have a static control construction which gives adequate durability and performance.

2.4.1 Physical Characteristics

CPT-1: Carpet Type CPT-4 shall comply with the following:

a. Manufacturing Method: Loop-over-Loop.

b. Yarn Content: Bently approved Solutia Ultron VIP Nylon.

c. Pile Height Tufted: High 0.250 inch; Low 0.125 inch in accordance with ASTM D 418.

d. Machine Gauge: Minimum 1/8 inch. inch in accordance with ASTM D 418.

e. Tufted Yarn Weight: Minimum 38 ounces per square yard. This does not include weight of backings. Weight shall be determined in accordance with ASTM D 418.

f. Total Finished Weight: 71 ounces per square yard.

g. Total Finished Thickness: 0.330 inches.

h. Pattern Repeat: 1/2 inch wide x 5/8 inch long.

i. Backing Construction: Primary backing materials shall be polypropylene. Secondary backing to suit project requirements shall be woven polypropylene.

2.4.2 Performance Requirements

a. Static Control: Static control shall be provided to permanently control static buildup to less than 3.5 kV when tested at 20 percent relative humidity and 70 degrees F in accordance with AATCC TM 134.

b. Flammability and Critical Radiant Flux Requirements: Carpet shall comply with 16 CFR 1630. Carpet shall be rated Class 1 when tested in accordance with ASTM E 648.

c. Moisture Barrier: Passes British Spillage Test, Method E.

d. Wear Warranty: 10 year Warranty.

2.5 CARPET TYPE 5 (CPT-5)

CPT-5 shall be Ticker Tape '8TT2806300', as manufactured by Bently Mills, or equal as manufactured by Atlas Carpet, Durkan Carpet, or approved equal.

Carpet shall be first quality; free of visual blemishes, streaks, poorly dyed areas, fuzzing of pile yarn, spots or stains, and other physical and manufacturing defects. Carpet materials and treatments shall be reasonably nonallergenic and free of other recognized health hazards. All grade carpets shall have a static control construction which gives adequate

durability and performance.

2.5.1 Physical Characteristics

CPT-5: Carpet Type CPT-5 shall comply with the following:

a. Manufacturing Method: Multi-Loop Giotti 3D.

b. Yarn Content: Bently approved Solutia Ultron VIP Nylon.

c. Pile Height Tufted: High 0.250 inch; Med. 0.187 inch; Low 0.093 inch in accordance with ASTM D 418.

d. Machine Gauge: Minimum 5/64 inch. inch in accordance with ASTM D 418.

e. Tufted Yarn Weight: Minimum 28 ounces per square yard. This does not include weight of backings. Weight shall be determined in accordance with ASTM D 418.

f. Total Finished Weight: 63 ounces per square yard.

g. Total Finished Thickness: 0.265 inches.

h. Pattern Repeat: 3-1/8 inch wide x 3-1/8 inch long.

i. Backing Construction: Primary backing materials shall be polypropylene. Secondary backing to suit project requirements shall be woven polypropylene.

2.5.2 Performance Requirements

a. Static Control: Static control shall be provided to permanently control static buildup to less than 3.5 kV when tested at 20 percent relative humidity and 70 degrees F in accordance with AATCC TM 134.

b. Flammability and Critical Radiant Flux Requirements: Carpet shall comply with 16 CFR 1630. Carpet shall be rated Class 1 when tested in accordance with ASTM E 648.

c. Moisture Barrier: Passes British Spillage Test, Method E.

d. Wear Warranty: 10 year Warranty.

2.6 CARPET TYPE 6 (CPT-6)

CPT-6 shall be Bryant Tip '8BQ3806300', as manufactured by Bently Mills, or equal as manufactured by Atlas Carpet, Durkan Carpet, or approved equal.

Carpet shall be first quality; free of visual blemishes, streaks, poorly dyed areas, fuzzing of pile yarn, spots or stains, and other physical and manufacturing defects. Carpet materials and treatments shall be reasonably nonallergenic and free of other recognized health hazards. All grade

carpets shall have a static control construction which gives adequate durability and performance.

2.6.1 Physical Characteristics

CPT-6: Carpet Type CPT-6 shall comply with the following:

a. Manufacturing Method: Loop-over-Loop.

b. Yarn Content: Bently approved Solutia Ultron VIP Nylon.

c. Pile Height Tufted: High 0.250 inch; Low 0.125 inch in accordance with ASTM D 418.

d. Machine Gauge: Minimum 1/8 inch. inch in accordance with ASTM D 418.

e. Tufted Yarn Weight: Minimum 38 ounces per square yard. This does not include weight of backings. Weight shall be determined in accordance with ASTM D 418.

f. Total Finished Weight: 70 ounces per square yard.

g. Total Finished Thickness: 0.310 inches.

h. Pattern Repeat: 1/2 inch wide x 5/8 inch long.

i. Backing Construction: Primary backing materials shall be polypropylene. Secondary backing to suit project requirements shall be woven polypropylene.

2.6.2 Performance Requirements

a. Static Control: Static control shall be provided to permanently control static buildup to less than 3.5 kV when tested at 20 percent relative humidity and 70 degrees F in accordance with AATCC TM 134.

b. Flammability and Critical Radiant Flux Requirements: Carpet shall comply with 16 CFR 1630. Carpet shall be rated Class 1 when tested in accordance with ASTM E 648.

c. Moisture Barrier: Passes British Spillage Test, Method E.

d. Wear Warranty: 10 year Warranty.

2.7 CARPET TYPE 7 (CPT-7)

CPT-7 shall be Monarch '8MH3206300', as manufactured by Bently Mills, or equal as manufactured by Atlas Carpet, Durkan Carpet, or approved equal.

Carpet shall be first quality; free of visual blemishes, streaks, poorly dyed areas, fuzzing of pile yarn, spots or stains, and other physical and manufacturing defects. Carpet materials and treatments shall be reasonably

nonallergenic and free of other recognized health hazards. All grade carpets shall have a static control construction which gives adequate durability and performance.

2.7.1 Physical Characteristics

CPT-7: Carpet Type CPT-7 shall comply with the following:

a. Manufacturing Method: Ultra Loop.

b. Yarn Content: Bently approved Solutia Ultron VIP Nylon.

c. Pile Height Tufted: High 0.250 inch; Low 0.187 inch in accordance with ASTM D 418.

d. Machine Gauge: Minimum 1/8 inch. inch in accordance with ASTM D 418.

e. Tufted Yarn Weight: Minimum 32 ounces per square yard. This does not include weight of backings. Weight shall be determined in accordance with ASTM D 418.

f. Total Finished Weight: 61 ounces per square yard.

g. Total Finished Thickness: 0.340 inches.

h. Pattern Repeat: 1/4 inch stripe.

i. Backing Construction: Primary backing materials shall be polypropylene. Secondary backing to suit project requirements shall be woven polypropylene.

2.7.2 Performance Requirements

a. Static Control: Static control shall be provided to permanently control static buildup to less than 3.5 kV when tested at 20 percent relative humidity and 70 degrees F in accordance with AATCC TM 134.

b. Flammability and Critical Radiant Flux Requirements: Carpet shall comply with 16 CFR 1630. Carpet shall be rated Class 1 when tested in accordance with ASTM E 648.

c. Moisture Barrier: Passes British Spillage Test, Method E.

d. Wear Warranty: 10 year Warranty.

2.8 ADHESIVES AND CONCRETE PRIMER

Adhesives and concrete primers for installation of carpet shall be waterproof, nonflammable, meet local air-quality standards, and shall be as recommended by the carpet manufacturer. Seam adhesive shall be waterproof, nonflammable, and nonstaining as recommended by the carpet manufacturer.

2.9 MOLDING

Aluminum molding shall be a hammered surface, pinless clamp-down type, designed for the type of carpet being installed. Finish shall be natural color anodized. Floor flange shall be a minimum 1-1/2 inches wide and face shall be a minimum 5/8 inch wide. Vinyl molding shall be heavy-duty and designed for the type of carpet being installed. Floor flange shall be a minimum 2 inches wide. Color shall be as selected by Contracting Officer.

2.10 TAPE

Tape for seams shall be as recommended by the carpet manufacturer for the type of seam used in installation.

2.11 COLOR, TEXTURE, AND PATTERN

Color, texture, and pattern shall be in accordance with this specification and Section 09915COLOR SCHEDULE.

PART 3 EXECUTION

3.1 SURFACE PREPARATION

Carpet shall not be installed on surfaces that are unsuitable and will prevent a proper installation. Holes, cracks, depressions, or rough areas shall be repaired using material recommended by the carpet or adhesive manufacturer. Floor shall be free of any foreign materials and swept broom clean. Before beginning work, subfloor shall be tested with glue and carpet to determine "open time" and bond.

3.2 MOISTURE AND ALKALINITY TEST

Concrete slab shall be tested for moisture content and excessive alkalinity in accordance with CRI 104. The moisture content shall not exceed a hygrometer reading of 65 percent.

3.3 PREPARATION OF CONCRETE SUBFLOOR

Installation of the carpeting shall not commence until concrete substrate is at least 90 days old. The concrete surfaces shall be prepared in accordance with instructions of the carpet manufacturer. Type of concrete sealer, when required, shall be compatible with the carpet.

3.4 INSTALLATION

Installation shall be in accordance with the manufacturer's instructions and CRI 104. Edges of carpet meeting hard surface flooring shall be protected with molding. Installation shall be in accordance with the molding manufacturer's instructions.

All carpeting within any given room shall be manufactured in the same lot or run to ensure consistency of colors and patterns.

3.4.1 Broadloom Installation

Broadloom carpet shall be installed direct glue down and shall be smooth, uniform, and secure, with a minimum of seams. Seams shall be uniform, unnoticeable, and treated with a seam adhesive. Side seams shall be run toward the light where practical and where such layout does not increase the number of seams. Breadths shall be installed parallel, with carpet pile in the same direction. Patterns shall be accurately matched. Cutouts, as at door jambs, columns and ducts shall be neatly cut and fitted securely. Seams at doorways shall be located parallel to and centered directly under doors. Seams shall not be made perpendicular to doors or at pivot points. Seams at changes in directions of corridors shall follow the wall line parallel to the carpet direction. Corridors with widths less than 6 feet shall have the carpet laid lengthwise down the corridors.

3.5 CLEANING AND PROTECTION

3.5.1 Cleaning

After installation of the carpet, debris, scraps, and other foreign matter shall be removed. Soiled spots and adhesive shall be removed from the face of the carpet with appropriate spot remover. Protruding face yarn shall be cut off and removed. Carpet shall be vacuumed clean.

3.5.2 Protection

The installed carpet shall be protected from soiling and damage with heavy, reinforced, nonstaining kraft paper, plywood, or hardboard sheets. Edges of kraft paper protection shall be lapped and secured to provide a continuous cover. Traffic shall be restricted for at least 45 hours. Protective covering shall be removed when directed by the Contracting Officer.

3.6 REMNANTS

Remnants remaining from the installation, consisting of scrap pieces more than 2 feet in dimension with more than 6 square feet total, shall be provided. Non-retained scraps shall be removed from site.

-- End of Section --

SECTION 09840

ACOUSTICAL WALL TREATMENT

PART 1 GENERAL

1.1 SUBMITTALS

Government approval is required for submittals with a "GA" designation; submittals having an "FIO" designation are for information only. The following shall be submitted in accordance with Section 01330 SUBMITTAL PROCEDURES:

SD-01 Data

Acoustical Wall Panels; GA.

Manufacturer's descriptive data and catalog cuts.

SD-04 Drawings

Acoustical Wall Panels; GA.

Drawings showing plan locations, elevations and details. Drawings shall include details of method of anchorage, location of doors and other openings, base detail and shape and thickness of materials.

SD-06 Instructions

Acoustical Wall Panels; FIO.

Manufacturer's installation instructions and recommended cleaning instructions.

SD-13 Certificates

Acoustical Wall Panels; FIO.

Certificates of compliance from an independent laboratory accredited by the National Laboratory Accreditation Program of the National Institute of Standards. A label or listing from the testing laboratory will be acceptable evidence of compliance.

SD-14 Samples

Acoustical Wall Panels; GA.

Manufacturer's standard metal panels, minimum 18 inches wide by 24 inches long.

1.2 DELIVERY AND STORAGE

Materials delivered and placed in storage shall be stored with protection from the weather, humidity and temperature variations, dirt, dust, or other contaminants.

1.3 WARRANTY

Manufacturer's standard performance guarantees or warranties that extend beyond a one year period shall be provided.

PART 2 PRODUCTS

2.1 ACOUSTICAL METAL WALL PANELS

Provide products of the following manufacturer that meet or exceed specified requirements:

1. Eckel Noise Control Technologies.

2.2 MATERIALS AND PRODUCTS

2.2.1 Panel Facings

Provide Eckel "Flat Functional metal panels.

2.2.2 Material

Manufacturer's standard painted aluminum.

2.2.3 Perforation Patterns

As indicated on Drawings

2.2.4 Hangers, Clips, and Anchorages

Provide all necessary hangers, clips and anchorage assemblies as necessary to install acoustic panels in locations indicated. Provide clips and anchorages fabricated from aluminum.

2.2.5 Acoustical Insulation

Provide manufacturer's standard 2 in. thick fine fibered, fibrous glass with density of not less than 1.5 lbs./cu. ft. Face insulation with manufacturer's standard flame guard polyethylene.

2.3 FABRICATION

Fabricate work to be truly straight, plumb, level and square.

Fabricate work to sizes, shapes, and profiles indicated on approved shop drawings.

Fabricate work with uniform, tight joints.

2.4 FINISHES

Factory Baked Enamel: Provide minimum 1.0 mil dry film thickness of thermosetting acrylic enamel over substrate which has been prepared by inhibited chemical cleaning, conversion coating, and priming.

PART 3 EXECUTION

3.1 SURFACE CONDITIONS

Walls shall be clean, smooth, oil free and prepared in accordance with panel manufacturer's instructions. Installation shall not begin until all wet work, such as, plastering, painting, and concrete are completely dry.

3.2 INSTALLATION

Panel installation shall be by personnel familiar with and normally engaged in installation of acoustical wall panels. Panels shall be applied in accordance with the manufacturer's installation instructions.

3.3 CLEANING

Following installation, dirty or stained panel surfaces shall be cleaned in accordance with manufacturer's instructions and left free from defects. Panels that are damaged, discolored, or improperly installed shall be removed and new panels provided as directed.

-- End of Section --

SECTION 09900

PAINTING, GENERAL

PART 1 GENERAL

1.1 REFERENCES

The publications listed below form a part of this specification to the extent referenced. The publications are referred to in the text by basic designation only.

AMERICAN CONFERENCE OF GOVERNMENTAL INDUSTRIAL HYGIENISTS (ACGIH)

ACGIH-02	(1996) Threshold Limit Values for Chemical Substances and Physical Agents and Biological Exposure Indices

AMERICAN SOCIETY FOR TESTING AND MATERIALS (ASTM)

ASTM D 3273	(1994) Resistance to Growth of Mold on the Surface of Interior Coating in an Environmental Chamber
ASTM D 3274	(1995) Evaluating Degree of Surface Disfigurement of Paint Films by Microbial (Fungal or Algal) Growth or Soil and Dirt Accumulation
ASTM D 4214	(1989) Evaluating the Degree of Chalking of Exterior Paint Films
ASTM D 4258	(1988; R 1992) Surface Cleaning Concrete for Coating

COMMERCIAL ITEM DESCRIPTIONS (CID)

CID A-A-1500	(Rev A) Sealer, Surface (Latex Block Filler)

FEDERAL SPECIFICATIONS (FS)

FS TT-C-555	(Rev B; Am 1) Coating, Textured (for Interior and Exterior Masonry Surfaces)

STEEL STRUCTURES PAINTING COUNCIL (SSPC)

SSPC SP 1	(1982) Solvent Cleaning
SSPC SP 2	(1995) Hand Tool Cleaning

SSPC SP 3 (1995) Power Tool Cleaning

SSPC SP 7 (1994) Brush-Off Blast Cleaning

1.2 SUBMITTALS

Government approval is required for submittals with a "GA" designation; submittals having an "FIO" designation are for information only. The following shall be submitted in accordance with Section 01330 SUBMITTAL PROCEDURES:

SD-01 Data

Paint; GA.

The names, quantity represented, and intended use for the proprietary brands of materials proposed to be substituted for the specified materials regardless of quantities in states where VOC content limitations apply.]

SD-06 Instructions

Mixing and Thinning; FIO. Application; FIO.

Manufacturer's current printed product description, material safety data sheets (MSDS) and technical data sheets for each coating system. Detailed mixing, thinning and application instructions, minimum and maximum application temperature, and curing and drying times between coats for epoxy, moisture-curing polyurethane, and liquid glaze coatings. Detailed application instructions for textured coatings shall be provided.

SD-09 Reports

Paint; FIO.

A statement as to the quantity represented and the intended use, plus the following test report for batches in excess of 50 gallons:

a. A test report showing that the proposed batch to be used meets specified requirements:

b. A test report showing that a previous batch of the same formulation as the batch to be used met specified requirements, plus, on the proposed batch to be used, a report of test results for properties of weight per gallon, viscosity, fineness of grind, drying time, color, and gloss.

SD-13 Certificates

Lead; FIO. Mildewcide and Insecticide; FIO. Volatile Organic Compound (VOC) Content; FIO.

Certificate stating that paints for interior use contain no mercurial mildewcide or insecticide. Certificate stating that paints proposed for use contain not more than 0.06 percent lead by weight of the total

nonvolatile. Certificate stating that paints proposed for use meet Federal VOC regulations and those of the of the local Air Pollution Control Districts having jurisdiction over the geographical area in which the project is located.

SD-14 Samples

Moisture-Curing Polyurethane; GA.

A complete moisture-curing polyurethane system applied to a panel of the same material as that on which the coating will be applied in the work and for each color specified. The sample panels will be used for quality control in applying the system.

Paint; GA.

Submit representative samples of each paint system color that is to be exposed in the completed work. Show full color ranges and finish variations expected. Provide texture to simulate actual conditions. Define each separate coat, including block fillers and primers. Resubmit samples until required sheen, color, and texture have been approved. Provide samples as follows:

1. Paint Samples for Smooth Surfaces: Provide samples of painted finishes on gypsum drywall or Masonite board having minimum size of 144 sq. in.

2. Paint Samples for Concrete Masonry Units: Provide samples of painted finishes on actual concrete masonry units having minimum size of 4 in. x 8 in.

3. Stained or Natural Finished Wood: Provide samples of stained or natural finished wood on actual samples of wood to be used in the completed work.

While the material is at the site or source of supply, and at a time agreeable to the Contractor and the Contracting Officer, a 1 quart sample of each color and batch, except for quantities of 50 gallons or less, shall be taken by random selection from the sealed containers by the Contractor in the presence of a representative of the Contracting Officer. The contents of the containers to be sampled shall be thoroughly mixed to ensure that the sample is representative. Samples shall be identified by designated name, specification number, manufacturer name and address, batch number, project contract number, intended use, and quantity involved.

1.3 PACKAGING, LABELING, AND STORING

Paints shall be in sealed containers that legibly show the designated name, formula or specification number, batch number, color, quantity, date of manufacture, manufacturer's formulation number, manufacturer's directions including any warnings and special precautions, and name of manufacturer. Pigmented paints shall be furnished in containers not larger than 5 gallons.

Paints and thinner shall be stored in accordance with the manufacturer's written directions and as a minimum stored off the ground, under cover,

with sufficient ventilation to prevent the buildup of flammable vapors and at temperatures between 40 and 95 degrees F. Paints shall be stored on the project site or segregated at the source of supply sufficiently in advance of need to allow 30 days for testing.

1.4 APPROVAL OF MATERIALS

When samples are tested, approval of materials will be based on tests of the samples; otherwise, materials will be approved based on test reports furnished with them. If materials are approved based on test reports furnished, samples will be retained by the Government for testing should the materials appear defective during or after application. In addition to any other remedies under the contract the cost of retesting defective materials will be at the Contractor's expense.

1.5 ENVIRONMENTAL CONDITIONS

Unless otherwise recommended by the paint manufacturer, the ambient temperature shall be between 45 and 95 degrees F when applying coatings other than water-thinned, epoxy, and moisture-curing polyurethane coatings. Water-thinned coatings shall be applied only when ambient temperature is between 50 and 90 degrees F. Epoxy, and moisture-curing polyurethane coatings shall be applied only within the minimum and maximum temperatures recommended by the coating manufacturer. Moisture-curing polyurethane shall not be applied when the relative humidity is below 30 percent.

1.6 SAFETY AND HEALTH

Work shall comply with applicable Federal, State, and local laws and regulations, and with the ACCIDENT PREVENTION PLAN, including the Activity Hazard Analysis as specified in the CONTRACT CLAUSES. The Activity Hazard Analysis shall include analyses of the potential impact of painting operations on painting personnel and on others involved in and adjacent to the work zone.

1.6.1 Worker Exposures

Exposure of workers to hazardous chemical substances shall not exceed limits established by ACGIH-02, or as required by a more stringent applicable regulation.

1.6.2 Toxic Compounds

Toxic products having ineffective physiological warning properties, such as no or low odor or irritation levels, shall not be used unless approved by the Contracting Officer.

1.6.3 Training

Workers having access to an affected work area shall be informed of the contents of the applicable material data safety sheets (MDSS) and shall be informed of potential health and safety hazard and protective controls associated with materials used on the project. An affected work area is one which may receive mists and odors from the painting operations.

Workers involved in preparation, painting and clean-up shall be trained in the safe handling and application, and the exposure limit, for each material which the worker will use in the project. Personnel having a need to use respirators and masks shall be instructed in the use and maintenance of such equipment.

1.6.4 Coordination

Work shall be coordinated to minimize exposure of building occupants, other Contractor personnel, and visitors to mists and odors from preparation, painting and clean-up operations.

1.7 QUALITY ASSURANCE

Source: Provide primers and undercoat paint produced by same manufacturer of finish coats for each substrate.

Coordination: Review other Specification Sections where primers are provided to ensure compatibility with with finish coatings provided under this Section.

Mock-Ups: Prior to commencing work of this Section, provide 100 sq. ft. mock-ups of each color, paint system, and substrate at locations acceptable to the Contracting Officer. Obtain Contracting Officer's acceptance of visual qualities. Refinish mock-ups until Contracting Officer's acceptance is obtained. Maintain acceptable mock-ups throughout the remainder of the work to serve as criteria for acceptance of the work. Acceptable mock-ups may be incorporated into the finish work. Test surfaces to confirm that the required dry-film thickness (DFT) has been achieved.

PART 2 PRODUCTS

2.1 PAINT

The term "paint" as used herein includes emulsions, enamels, paints, stains, varnishes, sealers, cement-emulsion filler, and other coatings, whether used as prime, intermediate, or finish coat. Paint shall conform to the requirements listed in the painting schedules at the end of this section. Additional requirements are as follows:

2.1.1 Colors and Tints

Colors shall be as scheduled in Section 09915, COLOR SCHEDULE. Manufacturer's color codes and references are for identification of color only. Tinting of epoxy and urethane paints shall be done by the manufacturer. Stains shall conform in shade to manufacturer's standard color. The color of the undercoats shall vary slightly from the color of the next coat.

2.1.2 Mildewcide and Insecticide

Paint specified for all coats applied to fabrics and vapor barrier jackets over insulation and surfaces in Swimming Pool Areas shall contain a mildewcide that will not adversely affect the color, texture, or durability

of the coating. The mildewcide shall be incorporated into the paint by the manufacturer and shall attain a surface disfigurement rating of 8 or greater when tested in accordance with ASTM D 3273 and evaluated in accordance with ASTM D 3274. Mercurial mildewcide shall not be used in interior paint. Insecticides shall not be used in paint.

2.1.3 Lead

Paints containing lead shall not be used.

2.1.4 Chromium

Paints containing zinc chromate or strontium chromate pigments shall not be used.

2.1.5 Volatile Organic Compound (VOC) Content

Paints shall comply with applicable federal, state and local laws enacted to insure compliance with Federal Clean Air Standards and shall conform to the restrictions of the local air pollution control authority.

2.1.6 ACCEPTABLE MANUFACTURERS

2.1.6.1 Latex and Alkyd Based Paints:

Provide products of one of the following manufacturers that meet or exceed specified requirements:

1. Benjamin Moore and Co. (Moore).
2. Devoe and Raynolds Co. (Devoe).
3. The Sherwin Williams Company (S-W)
4. ICI Paints (ICI)
5. Approved equal.

2.1.6.2 High Performance Paint Coatings:

Provide products of one of the following manufacturers that meet or exceed specified requirements:

1. Tnemec Corporation (Tnemec).
2. International Protective Coatings (IPC).
3. Valspar Corporation (Valspar).
4. Approved equal.

2.1.6.3 Multi-Colored Interior Coatings:

Refer to Section 09945, MULTI-COLORED INTERIOR COATINGS.

2.1.6.4 Other Requirements:

Materials used shall be best grade products of their respective kinds. The Painting Schedule is based on products the above named manufacturers. These are specified to establish a standard of quality and kind of material desired. Provide these products, or equals as approved by Contracting

Officer.

Note: If substitutes are proposed, submit complete schedule showing materials specified and equivalent materials proposed as substitutes. Provide complete manufacturer's product data on proposed materials. Substitutes must be approved by Contracting Officer before commitment for materials is made.

Assume full responsibility for proper performance of materials, for method of application, and for compatibility of materials applied over shop coats or other coats previously applied, including but limited to primers, sealers, preservative treatments, etc. Notwithstanding specific schedules in this Section, select primers which have been verified to be appropriate for each of the substrates and finishes encountered.

I. Provide miscellaneous painting materials such as linseed oil, shellac, turpentine, and thinner of the highest quality.

2.2 FILLERS, SOLVENTS, AND MISCELLANEOUS MATERIALS

2.2.1 Turpentine:

Pure gum spirits of turpentine conforming to Fed Spec. TT-T-801.

2.2.2 Drier:

Conform to Fed. Spec. TT-D-65.

2.2.3 Tinting Materials:

Best quality, ground in pure boiled linseed oil, limeproof, and non-fading.

PART 3 EXECUTION

3.1 INSPECTION AND GENERAL PREPARATION

Inspect surfaces to receive finishes to ensure they are in proper condition to receive work under this Section.

If surfaces are not thoroughly dry, or if surfaces cannot be put in proper condition to receive paint or other finish by customary cleaning methods, sanding, or spackling, notify Contracting Officer in writing.

Commencing work on any surface will be construed as acceptance of the surface as being satisfactory to properly receive the work of this Section.

Furnish and lay drop cloths in all rooms and areas where painting and finishing is being done, to adequately protect flooring and other work from all damage during the painting work.

Remove hardware, accessories, device plates, lighting fixtures, factory finished work, and similar items; or provide ample in-place protection. Use skilled mechanics for removal, resetting, and protection.

Cleaning: Do not paint over dirt, dust, rust, grease, moisture, or other contaminants detrimental to the formation of a durable paint finish. Clean surfaces thoroughly prior to painting in any given area.

Touch up bare or abraded spots on surfaces with shop or existing finishes scheduled to be painted under this Section. Use same material used for shop coat. Substrate shall be smooth, free from raised grain; putty sags, cracks, rust, grease, dirt, or other foreign matter or defect.

Incompatible Shop Primers: Remove incompatible shop primers and reprime surfaces, or provide barrier coats in compliance with finish paint manufacturer's instructions.

3.2 PROTECTION OF AREAS NOT TO BE PAINTED

Items not to be painted which are in contact with or adjacent to painted surfaces shall be removed or protected prior to surface preparation and painting operations. Items removed prior to painting shall be replaced when painting is completed. Following completion of painting, workmen skilled in the trades involved shall reinstall removed items. Surfaces contaminated by coating materials shall be restored to original condition.

Do not paint Ground Faced CMU or Prefaced (Glazed) CMU.

3.3 SURFACE PREPARATION

Surfaces to be painted shall be clean and free of foreign matter before application of paint or surface treatments. Oil and grease shall be removed prior to mechanical cleaning. Cleaning shall be programmed so that dust and other contaminants will not fall on wet, newly painted surfaces. Exposed ferrous metals such as nail heads on or in contact with surfaces to be painted with water-thinned paints, shall be spot-primmed with a suitable corrosion-inhibitive primer capable of preventing flash rusting and compatible with the coating specified for the adjacent areas.

3.3.1 Concrete, Stucco and Masonry Surfaces

Concrete, stucco and masonry surfaces shall be allowed to dry at least 30 days before painting, except concrete slab on grade which shall be allowed to cure 90 days before painting. Surfaces shall be cleaned in accordance with ASTM D 4258. Glaze, efflorescence, laitance, dirt, grease, oil, asphalt, surface deposits of free iron and other foreign matter shall be removed prior to painting. Surfaces to receive polyurethane or epoxy coatings shall be acid-etched or mechanically abraded as specified by the coating manufacturer, rinsed with water, allowed to dry, and treated with the manufacturer's recommended conditioner prior to application of the first coat.

Do not paint Ground Faced CMU or Prefaced (Glazed) CMU.

3.3.2 Ferrous Surfaces

Ferrous surfaces including those that have been shop-coated, shall be solvent-cleaned or detergent-washed in accordance with SSPC SP 1. Surfaces

that contain loose rust, loose mill scale, and other foreign substances shall be cleaned mechanically with hand tools according to SSPC SP 2, power tools according to SSPC SP 3 or by sandblasting according to SSPC SP 7. Shop-coated ferrous surfaces shall be protected from corrosion by treating and touching up corroded areas immediately upon detection.

3.3.3 Nonferrous Metallic Surfaces

Galvanized, aluminum and aluminum-alloy, lead, copper, and other nonferrous metal surfaces shall be solvent-cleaned or detergent-washed in accordance with SSPC SP 1.

3.3.4 Gypsum Board Surfaces

Gypsum board surfaces shall be dry and shall have all loose dirt and dust removed by brushing with a soft brush, rubbing with a cloth, or vacuum-cleaning prior to application of the first-coat material. A damp cloth or sponge may be used if paint will be water-based.

3.3.5 Mastic-Type Surfaces

Mastic-type surfaces shall be prepared by removing foreign material.

3.3.6 Plaster Surfaces

Plaster shall age at least 30 days before painting. Plaster shall be clean and free from loose matter and shall have an instrument-measured moisture content not exceeding 8 percent.

3.3.7 Wood Surfaces

Wood surfaces shall be cleaned of foreign matter. Moisture content of the wood shall not exceed 12 percent as measured by a moisture meter, unless otherwise authorized. Wood surfaces adjacent to surfaces to receive water-thinned paints shall be primed and/or touched up before applying water-thinned paints. Small, dry seasoned knots shall be scraped, cleaned, and given a thin coat of commercial knot sealer, before application of the priming coat. Pitch on large, open, unseasoned knots and all other beads or streaks of pitch shall be scraped off, or, if it is still soft, removed with mineral spirits or turpentine, and the resinous area shall be thinly coated with knot sealer. Finishing nails shall be set, and all holes and surface imperfections shall be primed. After priming, holes and imperfections in finish surfaces shall be filled with putty or plastic wood filler, colored to match the finish coat if natural finish is required, allowed to dry, and sanded smooth. Putty or wood filler shall be compatible with subsequent coatings.

3.3.7.1 Interior Wood Stain

Interior wood surfaces to receive stain shall be sanded. Oak and other open-grain wood to receive stain shall be given a coat of wood filler not less than 8 hours before the application of stain; excess filler shall be removed and the surface sanded smooth.

3.3.7.2 Sanding of Wood Floors

Sanding of wood floors is specified in Section 09640 WOOD STRIP FLOORING.

3.3.8 Previously Painted Surfaces

Previously painted surfaces scheduled to be repainted, or damaged during construction shall be thoroughly cleaned of all grease, dirt, dust or other foreign matter. Blistering, cracking, flaking and peeling or other deteriorated coatings shall be removed. Slick surfaces shall be roughened. Damaged areas such as, but not limited to, nail holes, cracks, chips, and spalls shall be repaired with suitable material to match adjacent undamaged areas. Edges of chipped paint shall be feather edged and sanded smooth. Rusty metal surfaces shall be cleaned as per SSPC requirements. Solvent, mechanical, or chemical cleaning methods shall be used to provide surfaces suitable for painting. Chalk shall be removed so that when tested in accordance with ASTM D 4214, the chalk resistance rating is no less than 8. New, proposed coatings shall be compatible with existing coatings. If existing surfaces are glossy, the gloss shall be reduced.

3.4 MIXING AND THINNING

When thinning is approved as necessary to suit surface, temperature, weather conditions, or application methods, paints may be thinned in accordance with the manufacturer's directions. When thinning is allowed, paints shall be thinned immediately prior to application with not more than 1 pint of suitable thinner per gallon. The use of thinner shall not relieve the Contractor from obtaining complete hiding, full film thickness, or required gloss. Thinning shall not cause the paint to exceed limits on volatile organic compounds. Paints of different manufacturers shall not be mixed.

3.4.1 Cement-Emulsion Filler Coat

Cement and aggregate shall be dry-mixed so that uniform distribution and intermixing are obtained. Mixing liquid and one-half of the total amount of water shall be premixed and added gradually to the white portland cement and aggregate with constant stirring until a thick, smooth material is obtained. Emulsion paint shall then be added to the mixture and stirred until uniformity is obtained. The blend shall have a thick, creamy consistency. The remainder of the water shall be added if necessary to obtain a material with adequate application properties. Blending resin emulsion or emulsion paint with any other component shall be done with caution; too rapid an agitation will cause air entrapment and foaming.

3.4.2 Two-Component Systems

Two-component systems shall be mixed in accordance with manufacturer's instructions. Any thinning of the first coat to ensure proper penetration and sealing shall be as recommended by the manufacturer for each type of substrate.

3.5 APPLICATION

Painting practices shall comply with applicable federal, state and local laws enacted to insure compliance with Federal Clean Air Standards. Unless otherwise specified or recommended by the paint manufacturer, paint may be applied by brush, roller, or spray. At the time of application, paint shall show no signs of deterioration. Uniform suspension of pigments shall be maintained during application. Each coat of paint shall be applied so dry film shall be of uniform thickness and free from runs, drops, ridges, waves, pinholes or other voids, laps, brush marks, and variations in color, texture, and finish. Hiding shall be complete. Rollers for applying paints and enamels shall be of a type designed for the coating to be applied and the surface to be coated. Special attention shall be given to insure that all edges, corners, crevices, welds, and rivets receive a film thickness equal to that of adjacent painted surfaces. Paints, except water-thinned types, shall be applied only to surfaces that are completely free of moisture as determined by sight or touch.

Painting Schedule in this Section lists minimum number of coats required. If specified minimum number of coats does not completely cover or hide base materials, provide additional coats required for coverage and uniform finish appearance, without additional cost to Owner.

Apply paint in strict accordance with manufacturer's instructions. Use applicators and techniques best suited for substrates and types of materials being applied. No material shall be thinned in any way except as directed by manufacturer.

Apply paints and coatings at coverage rates and dry film thicknesses scheduled at the end of this Section. Each coat applied must be inspected and approved by Contracting Officer prior to application of succeeding coat, otherwise no credit for the coat applied will be given and work in question shall be recoated without additional expense to Owner. Notify Contracting Officer when each coat is ready for inspection.

Additional Coats: Provide additional coats necessary to eliminate show through and bleed through conditions.

Drying Time: Allow manufacturer's recommended drying time between successive coats. However, allow each coat to thoroughly dry prior to application of subsequent coat.

Tinting: Tint prime coat on gypsum wallboard and plaster to approximate color of final shade.

Closets: Finish closets inside the same as adjoining rooms, unless otherwise specified or scheduled.

Doors and Panels: Paint all doors, panels, access panels, etc., that are not shop finished in the "open" position. Paint all edges, tops, bottoms, and both faces. Paint back face of access panels and removable or hinged covers to match adjacent exposed surfaces.

Movable Equipment and Furnishings: Paint surfaces behind movable equipment and furnishings same as adjacent exposed surfaces.

Permanently Fixed Equipment: Paint surfaces behind permanently fixed equipment with prime coat only.

Duct Interiors: Paint interior surfaces of ducts where visible through registers, grilles, or louvers with flat black, non-specular paint.

Finished work shall be free from runs, sags, hairs, defective brushing, and clogging of lines and angles. Flaws visible in the completed work shall be removed and the area satisfactorily repaired.

Concrete Floor to Receive Sealer: Apply sealer at a rate not to exceed 200 sq. ft./gal.

Mechanical and Electrical Work: Painting of mechanical and electrical items is limited to to items exposed to view.

1. Mechanical items to be painted include, but are not limited to:

   Ductwork.
   Heat exchangers.
   Insulation
   Motors and mechanical equipment.
   Piping, hangers, and supports.
   Tanks and equipment.
   All non-factory finished items.

2. Electrical items to be painted include but are not limited to:

   Conduit and fittings.
   Switchgear.
   All non-factory finished items.

Block Fillers: Apply block fillers to concrete masonry units at rates to ensure complete coverage with pores completely filled.

Completed Work: Provide finishes that match approved samples and mock-ups for color, texture, and coverage. Remove, refinish, or repaint work not in compliance with specified requirements.

3.5.1 Ventilation

Affected areas shall be ventilated during paint application so that workers exposure to chemical substances shall not exceed limits as established by ACGIH-02, or as required by a more stringent applicable regulation. Interior work zones having a volume of 10,000 cubic feet or less shall be ventilated at a minimum of 2 air exchanges per hour. Ventilation in larger work zones shall be maintained by means of mechanical exhaust. Solvent vapors shall be exhausted outdoors, away from air intakes and workers. Return air inlets in the work zone shall be temporarily sealed before start of work until the coatings have dried.

3.5.2 Respirators

Operators and personnel in the vicinity of operating paint sprayers shall

wear respirators.

3.5.3 First Coat

The first coat on plaster, gypsum wallboard, and other surfaces shall include repeated touching up of suction spots or overall application of primer or sealer to produce uniform color and gloss. Excess sealer shall be wiped off after each application. The first coat on both faces of wood doors shall be applied at essentially the same time. Glazed doors and sashes shall be given the specified coating system within 3 weeks of the time they are glazed, but not before the glazing material has set; paint shall overlay glass about 70 mils all around. Each varnish coat shall be sanded lightly prior to application of subsequent coats.

3.5.4 Timing

Surfaces that have been cleaned, pretreated, and otherwise prepared for painting shall be given a coat of the specified first coat as soon as practical after such pretreatment has been completed, but prior to any deterioration of the prepared surface. Sufficient time shall elapse between successive coats to permit proper drying. This period shall be modified as necessary to suit weather conditions. Oil-based or oleoresinous solvent-type paints shall be considered dry for recoating when the paint feels firm, does not deform or feel sticky under moderate pressure of the thumb, and the application of another coat of paint does not cause the undercoat to lift or lose adhesion. Manufacturer's instructions for application, curing and drying time between coats of two-component systems shall be followed.

3.5.5 Stains

Stain shall be applied at the rate specified in the manufacturer's printed directions. Oil-type stain shall be applied by brushing with the grain for the full length of the board or course of siding.

3.5.6 Fillers

Concrete and masonry surface voids shall be filled; however, surface irregularities need not be completely filled. The dried filler shall be uniform and free of pinholes. Filler shall not be applied over caulking compound.

3.5.6.1 Cement-Emulsion Filler

Immediately before filler application, surfaces shall be dampened uniformly and thoroughly, with no free surface water visible, by several applications of potable water with a fog spray, allowing time between the sprayings for water to be absorbed. Cement-emulsion filler shall be scrubbed into the surface vigorously with a stiff-bristled brush having tampico or palmyra bristles not longer than 2-1/2 inches. At least 24 hours shall elapse before applying exterior emulsion paint over cement-emulsion filler. When the ambient temperature is over 85 degrees F, cement-emulsion filler surfaces shall be dampened lightly with a fog spray of potable water immediately prior to application of the subsequent paint coat.

3.5.6.2 Latex Filler

Latex filler, CID A-A-1500, shall be applied according to the manufacturer's instructions. Surface voids shall be filled and excess filler shall be removed from the surface with a rubber squeegee. The filler shall be allowed to dry the length of time specified by the manufacturer prior to applying successive coats of paint.

3.5.7 Textured Coating

Application of textured coating, FS TT-C-555, shall be as specified in the manufacturer's printed directions.

3.5.8 Ferrous-Metal Primer

Primer for ferrous-metal shall be applied to ferrous surfaces to receive paint other than asphalt varnish prior to deterioration of the prepared surface. The semitransparent film applied to some pipes and tubing at the mill is not to be considered a shop coat, but shall be overcoated with the specified ferrous-metal primer prior to application of finish coats.

3.6 PIPE COLOR CODE MARKING

Pipes in exposed areas and in accessible spaces shall be provided with color band and titles adjacent to all valves, except those provided at plumbing fixtures, at not more than 40 foot spacing on straight pipe runs, adjacent to change in direction, and on both sides where pipes pass through walls or floors. Color code marking shall be of the color listed in TABLE I and the size listed in TABLE II. The arrows shall be installed adjacent to each band to indicate the direction of flow in the pipe. The legends shall be printed in upper-case black letters as listed in TABLE I. Letter sizes shall be as listed in TABLE II. Marking shall be painted or applied using colored, pressure-sensitive adhesive markers of standard manufacture. Paint shall be as specified for insulated and uninsulated piping.

TABLE I. COLOR CODES FOR MARKING PIPE

Material	Band	Letters and Arrow*	Legend
Cold water (potable)	Green	White	POTABLE WATER
Fire protection water	Red	White	FIRE PR. WATER
Hot water (domestic)	Green	White	H.W.
Hot water recirculating (domestic)	Green	White	H.W.R.
High temp. water supply	Yellow	Black	H.T.W.S.
High temp. water return	Yellow	Black	H.T.W.R.
Boiler feed water	Yellow	Black	B.F.
Low temp. water supply (heating)	Yellow	Black	L.T.W.S.
Low temp. water return (heating)	Yellow	Black	L.T.W.R.
Condenser water supply	Green	White	COND. W.S.
Condenser water return	Green	White	COND. W.R.

TABLE I. COLOR CODES FOR MARKING PIPE

Material	Band	Letters and Arrow*	Legend
Chilled water supply	Green	White	C.H.W.S.
Chilled water return	Green	White	C.H.W.R.
Treated water	Yellow	Black	TR. WATER
Chemical feed	Yellow	Black	CH. FEED
Compressed air	Yellow	Black	COMP. AIR
Natural gas	Blue	White	NAT. GAS
Freon	Blue	White	FREON
Fuel oil	Yellow	Black	FUEL OIL
Steam	Yellow	Black	STM.
Condensate	Yellow	Black	COND.

TABLE II. COLOR CODE MARKING SIZES

Outside Diameter of Pipe Covering (Inches)	Length of Color Band (inches)	Arrow Length x Width (Inches)	Size of Legend Letters and Numerals (Inches)
Less than 1-1/2	8	8 x 2-1/4	1/2
1-1/2 to 2-3/8	8	8 x 2-1/4	3/4
2-1/2 to 7-7/8	12	8 x 2-1/4	1-1/4
8 to 10	24	12 x 4-1/2	2-1/2
Over 10	32	12 x 4-1/2	3-1/2

3.7 MISCELLANEOUS PAINTING

3.7.1 Lettering

Lettering shall be provided as scheduled on the drawings, shall be block type, and shall be black enamel. Samples shall be approved before application.

3.8 SURFACES TO BE PAINTED

Surfaces listed in the painting schedules at the end of this section, other than those listed in paragraph SURFACES NOT TO BE PAINTED, shall be painted as scheduled.

3.9 SURFACES NOT TO BE PAINTED

Surfaces in the areas listed below shall not to be painted. In addition, surfaces of hardware, fittings, and other factory finished items shall not be painted.

Finishes for the following items are either included under other appropriate Sections or require no painting, except as otherwise specifically scheduled with subsequent Exterior and Interior Schedules.

1. Chrome or nickel plating, stainless steel, bronze, brass, and

aluminum other than mill finished, unless otherwise specified.

2. Factory finished mechanical and electrical equipment, pumps, and machinery, which occur in mechanical or equipment rooms or areas.

3. Galvanized ducts, pipes, conduits, etc., fully concealed from view in the finished work.

4. Factory finished materials, specialties, and accessories unless otherwise specified.

5. Ceramic and clay products, glass, plastic, and other surfaces with "integral" finishes, except as otherwise scheduled hereinbelow.

6. Exterior concrete.

7. Exterior masonry.

8. Architectural woodwork specified as shop finished.

9. Steel doors and frames specified as shop finished.

10. Ground-Faced CMU.

11. Prefaced (Glazed) CMU.

3.10 CLEANING

Cloths, cotton waste and other debris that might constitute a fire hazard shall be placed in closed metal containers and removed at the end of each day. Upon completion of the work, staging, scaffolding, and containers shall be removed from the site or destroyed in an approved manner. Paint and other deposits on adjacent surfaces shall be removed and the entire job left clean and acceptable.

3.11 PAINTING SCHEDULES

The following painting schedules identify the surfaces to be painted and prescribe the paint to be used and the number of coats of paint to be applied. Contractor options are given for each system. Provide systems specified, or approved equal.

EXTERIOR PAINTING SCHEDULE

1. Exterior Galvanized Steel for Acrylic Polyurethane Finis

This paint system is for exterior handrail and railing assemblies, exposed steel lintels, miscellaneous supports, exterior steel doors and frames, steel bollards, Exterior canopy supports, etc.):

Shop Finished	1. These items are specified as shop primed and finish painted under Sections 05500 and Section 08110.

EXTERIOR PAINTING SCHEDULE

2. Structural Steel at Exterior Bridges

Two Shop Prime Coats	1. Two Primer coats in shop, under Section 05550	

Preparation as work of this Section 09900:

Pressure wash the steel in accordance with SSPC-SP#1. Allow steel to properly dry.

One Top Coat (DFT 1.5 to 2.0 mils)	1.	Tnemec "No. 73" Acrylic Polyurethane
	2.	IPC Equal
	3.	Ameron equal

3. All Other Exterior Metals (Gloss Paint Finish), Alkyd Primer, Alkyd Finis :

One Prime Coat:	1.	Devoe No. 13101 Rust Penetrating Primer
	2.	Moore IronClad Retardo Primer (163)
	3.	S-W Kem Kromix Metal Primer
Two Coats	1.	Devoe 70XX Mirrolac Gloss
	2.	Moore Impervo Enamel (133)
	3.	S-W Metalastic II Enamel

INTERIOR PAINTING SCHEDULE

1. Interior Metal Handrail, Railing and Stair Assemblies (including trims, fascias and stringers :

One Shop Prime Coat	1. Epoxy Primer in shop, under Section 05500.	

After Installation, painting in the field as work of this Section 09900:

Touch-Up Coat	1.	Tnemec "No. 66 Hi-Build Epoxoline" Epoxy
	2.	IPC Equal
	3.	Ameron equal
One Top Coat (DFT 1.5 to 2.0 mils)	1.	Tnemec "No. 73" Acrylic Polyurethane
	2.	IPC Equal
	3.	Ameron equal

2. All Galvanized Metal Decking in Swimming Pool Areas

Preparation as work of this Section 09900:

Pressure wash the deck using Oakite #747 in accordance with SSPC-SP#1. After deck is properly dry, provide a light brush-blast in accordance with SSPC-SP#7 until surface of deck approximates 100 grit sandpaper.

INTERIOR PAINTING SCHEDULE

Two Top Coats	1.	Tnemec "No. 66" Hi-Build Epoxoline
(DFT 3 to 4 mils)	2.	IPC Equal
	3.	Ameron equal

3. Galvanized Metal Decking at Atrium

Preparation as work of this Section 09900:

Pressure wash the deck using Oakite #747 in accordance with SSPC-SP#1. After deck is properly dry, provide a light brush-blast in accordance with SSPC-SP#7 until surface of deck approximates 100 grit sandpaper.

One Prime Coat	1.	Tnemec "No. 66" Hi-Build Epoxoline
(DFT 4 mils)	2.	IPC Equal
	3.	Ameron equal
One Top Coat	1.	Tnemec "No. 73" Acrylic Polyurethane
(DFT 1.5 to	2.	IPC Equal
2.0 mils)	3.	Ameron equal

4. All Exposed Structural Steel in Atrium

One Shop Prime Coat 1. Primer in shop, under Section 05120.

After Installation, painting in the field as work of this Section 09900:

One Intermediate Coat	1.	Tnemec "No. 66" Hi-Build Epoxoline
(DFT 4 mils)	2.	IPC Equal
	3.	Ameron equal
One Top Coat	1.	Tnemec "No. 73" Acrylic Polyurethane
(DFT 1.5 to	2.	IPC Equal
2.0 mils)	3.	Ameron equal

5. All Steel, Including Structural Steel, in Walls & above Hung Ceilings in Swimming Pool Areas, including Steel to Receive Cementitiou Fire-Proofing

Two Shop Prime Coats 1. Primers in shop, under Section 05120.

After Installation, painting in the field as work of this Section 09900:

One Top Coat	1.	Tnemec "No. 66" Hi-Build Epoxoline
(DFT 3 to 4 mils)	2.	IPC Equal
	3.	Ameron equal

6. CMU Walls in Dry Areas (All block walls, except at Swimming Pools)

One Primer Coat	1.	Tnemec Series 54-580 Water-Based
of Block Filler	2.	IPC Equal
Spay-Applied and	3.	Ameron equal

INTERIOR PAINTING SCHEDULE

Rolled Out		
One Top Coat (DFT 5 mils each coat)	1.	Tnemec Series 113 Acrylic Epoxy
	2.	IPC Equal
	3.	Ameron equal

7. CMU Walls in Swimming Pool Areas

One Primer Coat of Block Filler Spay-Applied and Rolled Out	1.	Tnemec Series 130 Envirofil
	2.	IPC Equal
	3.	Ameron equal
Two Top Coats (DFT 6 mils each coat)	1.	Tnemec "No. 84" Ceramalon
	2.	IPC Equal
	3.	Ameron equal

9. Interior Gypsum Wallboard and Plaster for Alkyd Eggshell, or Satin Finis :

One Prime Coat	1.	Moore Latex Quick Dry Prime Seal (201)
	2.	Devoe 1102 Wonder-Tones Latex Primer
	3.	S-W ProMar 200 Latex Wall Primer
Two Top Coats	1.	Moore Satin Impervo (235)
	2.	Devoe 23XX Velour Eggshell
	3.	S-W ProMar 200 Alkyd Eg-Shel Enamel

10. Interior Gypsum Wallboard and Plaster Ceilings for Alkyd Flat Finis :

One Prime Coat	1.	Moore Latex Quick Dry Prime Seal (201)
	2.	Devoe 1102 Wonder-Tones Latex Primer
	3.	S-W ProMar 200 Latex Wall Primer
Two Top Coats	1.	Moore Alkyd Sani-Flat (204)
	2.	Devoe 21XX Velour Flat
	3.	S-W ProMar 200 Alkyd Flat Wall Paint

11. Interior Finish Carpentry for Alkyd Semi-Gloss Paint Finish (softwoods, paint grade hardwoods, MDO, and hardwood veneers):

One Prime Coat	1.	Moore Moorcraft Alkyd Enamel (269)
	2.	Devoe 8801 Velour Alkyd Undercoater
	3.	S-W ProMar 200 Alkyd Enamel Undercoater
Two Top Coats	1.	Moore Moorcraft Alkyd Semi-Gloss (271)
	2.	Devoe 26XX Velour Semi-Gloss Enamel
	3.	S-W ProMar 200 Alkyd Semi-Gloss Enamel

12. Interior Finish Carpentry and Wood Doors for Satin Transparent Finish (all hardwoods and hardwood veneers, except paint grade and factory-finished items :

INTERIOR PAINTING SCHEDULE

Preparation as work of this Section 09900:

Sand	120 grit sandpaper.
Sand	220 grit sandpaper.
Stain	1. Moore Interior Penetrating Stain 241 2. Devoe Wonderwood Stain 3. Glidden Y218 Interior Stain
Two Top Coats	1. Moore Benwood Polyurethane Finish 435 2. Devoe Mirrothane Urethane Varnish #6600 3. Glidden Y10 Urethane Varnish
Sand Between Urethane Coats	220 grit sandpaper.

13. Interior Metals not Specified to Receive other Coating System :

One Shop Prime Coat	1. Primer in shop, under other Sections as applicable.

After Installation, painting in the field as work of this Section 09900:

One Prime Coat (only where shop primer is not specified):	1. Moore Ironclad Retardo Primer 2. Devoe 13101 Rust Penetrating Primer 3. S-W Kem Kromix Metal Primer

OR, at non-ferrous metals only,

1. Moore Ironclad Zinc Chromate Primer
2. Devoe Zinc Chromate Primer

Note: One prime coat only is required at interior metal work, except touch-up of areas which have become rusted or damaged prior to finish painting.

Two Top Coats	1. Moore Satin Impervo Enamel 2. Devoe Velour Semi-Gloss Enamel 3. S-W ProMar Salon Alkyd Semi Gloss Enamel

14. Concrete Floors (not to receive finish material :

Two Coats Sealer	1. Sika Chemical "Sikagard 619" 2. PPG "Aquapon Polyamide-Epoxy Clear Concrete Sealer and Finish 97-57/98". 3. "Ashford Formula".

15. Mechanical and Electrical Wor

INTERIOR PAINTING SCHEDULE

(Paint all exposed items throughout the project except factory finished items with factory-applied baked enamel finishes which occur in mechanical rooms or areas, and excepting chrome or nickel plating, stainless steel, and aluminum other than mill finished. Paint all exposed ductwork and inner portion of all ductwork visible through grilles and registers):

Same as specified for other interior metals, hereinabove.

-- End of Section --

SECTION 09915

COLOR SCHEDULE

PART 1 GENERAL

1.1. GENERAL

This section covers only the color of the exterior and interior materials and products that are exposed to view in the finished construction. The word “color” as used herein includes surface color and pattern. Requirements for quality and method of installation are covered in other appropriate sections of the specifications. Specific locations where the various materials are required are shown on the drawings. Items not designated for color in this section may be specified in other sections. When color is not designated for an item, the Contractor shall propose a color for approval.

1.2. SUBMITTALS

Government approval is required for submittals with a “GA” designation; Submittals having an “FIO” designation are for information only. The following shall be submitted in accordance with Section 01330 SUBMITTAL PROCEDURES:

SD-14 Samples

Finish Boards; GA

Submit duplicate Finish Boards for each room or groups of rooms with matching colors and for exterior materials as required below.

1.3. FINISH BOARDS

Contractor shall prepare and submit Finish Boards indicating each type of color/finish/material required within a room or similar group of rooms and for exterior materials. Finish Boards shall contain samples not less than 2 inches by 2 inches. Samples shall be of actual colors/finishes/ materials required. No photographs or printed representations shall be used. Samples shall be in addition to those required as part of individual specification sections.

Samples shall be neatly arranged and adhered to a heavy white cardstock backup of 8.5 inches by 11 inches or 11 inches by 17 inches with a center hinge to permit folding to 8.5 by 11 size. All samples shall have machine printed labels with 1/8 inch minimum height text identifying each color/finish by corresponding document reference numbers/letters and color numbers/ letters. Each Finish Board shall have a machine printed legend identifying item reference numbers/ letters, color numbers/letters, manufacturer’s name, manufacturers model numbers, manufacturer’s color names and numbers, finish systems, lot numbers, and the like. Legend text shall be 11 point size minimum. Each Finish Board shall have machine printed labels identifying the room name(s) and number(s) and date of submittal and any revisions.

Finish Boards shall be used by the Government to determine if any adjustments are required to the colors selected as required below.

PART 2 PRODUCTS

2.1. REFERENCE TO A MANUFACTURER'S COLOR

Where Color is shown as being specific to one manufacturer, an equivalent color by another manufacturer may be submitted for approval. Manufacturers and materials specified are not intended to limit the selection of equal colors from other manufacturers.

2.2. REVIEW AND ADJUSTMENT

The colors/finishes indicated within the schedule shall be subject to review and approval by the contracting officer. Review and approval shall be by Finish Boards as required above. Such review and approval is intended to ascertain the actual colors provided on any given item and adjust other colors required to maintain the required relationships. The contractor shall provide such adjustment in color at no additional cost to the government.

2.3 GENERAL REQUIREMENTS

Colors indicated shall apply to the entire item, surface, system, and the like, indicated, including reveals, arises, corners, returns, edges and the like. Abutting colors shall meet in crisp, uniform lines, true to geometry.

Wall colors shall apply to entire surface including reveals, vertical furred spaces, grilles, diffusers, electrical and access panels, and piping and conduit adjacent to wall surfaces unless otherwise specified. Items not specified in other paragraphs shall be painted to match adjacent wall surfaces.

Ceiling colors shall apply to ceiling surfaces, including soffits, furred down areas, grilles, diffusers, registers, and access panels. Ceiling color shall also apply to joist, underside of roof deck and conduit, ductwork, piping and the like where joists and deck are exposed and required to be painted.

2.4 COLOR SCHEDULE

The color schedule lists the colors, patterns and textures required for exterior and interior finishes, including both factory applied and field applied colors. The schedule is arranged specification section and division number, the Material List Key reference numbers/letter as applicable per drawing A1.00, and any color reference/key noted on the Finish Schedule. Additional items not otherwise referenced appear at the end of the schedule.

Not all materials/colors/finishes are included herein. Additional colors are required within individual specification sections. Such colors shall be subject to Review and Adjustment as noted above.

Section 03366 CHEMICALLY STAINED CONCRETE

33.6a. Chemically Stained Concrete:

1. Color one: LM Scofield Co. CS-12 Weathered Bronze
2. Color two: LM Scofield Co. CS-2 Padre Brown
3. Color three: LM Scofield Co. CS-14 Dark Walnut
4. Color four: LM Scofield Co. CS-15 Antique Amber

Section 04200 MASONRY

42a. Face Brick:

1. Color one: Glen-Gery Brick, W72 (60%)/R83(40%)
2. Color two: Darlington Brick & Clay Products Co., #7 Chatham Dark Grey Velour

42c. Ground Face CMU:

1. AV Jandris 5100
2. AV Jandris 510

42d. Mortar – Natural Cement Grey

42n. Glazed Face CMU:
CB-1 Astraglaze, Straight Base, Color: Ebony

Infill Brick – To match adjacent existing three color range of buff brick.

Section 05500 MISCELLANEOUS METAL

55a. Metal Stairs
Color shall match PT-30 (for interior only).

55b. Handrails
Color shall match PT-30 (for interior only).

55c. Guardrails
Color shall match PT-30 (for interior only).

55d. Relieving Angles
Color shall match PT-29 (for interior only).

55e. Steel Loose Lintels
Color shall match PT-5 (for interior only).

55f. Steel ladders
Color shall match PT-30 (for interior only).

55g. Gymnastics Support Steel
Color shall match PT-1.

55h. Boxing/Heavybag Support Steel
Color shall match PT-1.

55q. Steel Grating
Color shall match PT-29.

55u. Roof Scuttles
Color to match adjacent surfaces.

55v. Perforated Steel Sheet
Color shall match adjacent surfaces, except stainless steel shall Not be painted.

55w. Access doors
Color shall match adjacent surfaces, except stainless steel shall not be painted.

Section 05550 STEEL TRUSS EGRESS BRIDGE SUPERSTRUCTURE
Bridge structure
Color shall be black
Guardrails
Color shall be black

Section 05800 EXPANSION JOINTS
Resilient and metal colors/finishes shall be as indicated on the drawings.

Section 06400 ARCHITECTURAL WOODWORK
Transparent finish without stain at all Select White Maple.
Transparent finish with opaque ebony (black) stain White Oak

62d. Finishes
Metal Laminate
PL-9 Chemetal, #220 Venetian Wave

Plastic Laminate
PL-1 Pionite, #SG213-S Opti Gray
PL-2 Pionite, #SP414-S Royal Purple
PL-3 Pionite, #SR520-S Primary Red
PL-4 Pionite, #SY913-S Forsythia
PL-5 Pionite, #AO101-S Chili Fiber
PL-6 Pionite, #AT991-S Wheat Fiber
PL-7 Pionite, #ST606-S Taupe
PL-8 Pionite, #AV781-S Sage Coral
PL-10 Pionite, #SG241-S Folkstone Gray
PL-11 Pionite, #AE021-S Graphite Specktrum
PL-12 Pionite, #SW806-S Carnation White

4. Solid Surface Countertops
SS-1 Wilsonart, Gibraltar Solid Surfacing, D426-MG, Raven Mirage

Section 07240 EXTERIOR AND INTERIOR FINISH SYSTEM
72.4b Synthetic Plaster at Interior Swimming Pools
D-1 Not Used
D-2 To Match 99b, PT-7
D-3 To Match 99b, PT-11
D-4 To Match 99b, PT-1

Section 07413 METAL SIDING
74.2a Insulated Sandwich Type Wall Panels
Duranar XL UC51713XL Pewter
74.2b Non-Insulated Type Wall Panels
Duranar XL UC51713XL Pewter for flat panels.
Duranar Arctic White 5MW53188 for radius column covers.

Section 07900 JOINT SEALING
Exterior: Color shall be as follows where joints are exposed to view in the finished work:
1. At metal siding color shall match adjacent metal siding color.
2. At masonry or cast stone color shall match mortar color.
3. At masonry or cast stone abutting dissimilar materials color shall match mortar color.
4. At window glazing color shall be black.
5. At copper flashing color shall be brown.
6. At translucent wall and skylight system sealant shall match framing color.

Interior: Color shall be as follows where joints are exposed to view in the finished work:

1. At joints between dissimilar material color shall match field painted item.
2. At joints between dissimilarly colored field painted items color shall match lighter paint color.
3. At masonry or cast stone color shall match mortar color.
4. At masonry or cast stone abutting dissimilar materials color shall match mortar.
5. At ceramic tile color shall match grout color.
6. At ceramic tile to dissimilar materials color shall match grout color.
7. At perimeter of stainless steel accessories, including toilet accessories, fire extinguisher cabinets and the like, color shall be medium gray.
8. At supplemental framing for athletic equipment color shall match supplemental framing.

At concealed joints color shall be manufacturer’s standard medium gray. At conditions other than noted above color shall be as selected by contracting officer.

Section 08110 STEEL DOORS AND FRAME

81.1a1 Steel Door Frame

Exterior Color shall match PT-31, except stainless steel shall not be painted.
Interior Color shall match PT-2, except stainless steel shall not Be painted.

81.1b1 Steel Door

Exterior Color shall match PT-31, except stainless steel shall not be painted.
Interior Color shall match PT-2, except stainless steel shall not Be painted.

81.1c1 Borrowed-Lite Frame

Exterior Color shall match PT-31, except stainless steel shall not be painted.
Interior Color shall match PT-2, except stainless steel shall not be painted.

Section 08210 WOOD DOORS

82a Solid Core Wood Doors

Transparent finish without stain at all Select White Maple.

Section 08212 STILE AND RAIL WOOD DOORS

82.1a Stile and rail wood doors

1. Transparent finish without stain at all Red Oak, fire-rated wood stile and rail doors.
2. Transparent finish stained dark brown to match existing doors for wood stile and rail doors in Building B.

Section 08330 OVERHEAD ROLLING DOORS

83a Insulated Curtain Service Door

Color shall match PT-31, except stainless steel shall not be painted.

83b Steel Slat Curtain Fire Doors

Color shall match PT-31, except stainless steel shall not be painted.

Section 08331 Metal Rolling Counter Doors
83c Rolling Counter Door
Color shall match PT-2, except stainless steel shall not be painted.

Section 08353 OPERABLE PARTITIONS
83.5a Operable Partition
Metal trim; Hufcor Standard Gray
Vinyl fabric; Hufcor Highland, 227 Stone

Section 08520 ALUMINUM WINDOWS
Duranar XL UC51713XL Pewter for all frame/sash components except stainless steel screens which shall be unfinished.

Section 08810 GLASS AND GLAZING
88b4 Glass Type 4
Viracon V948 Medium Grey

88b5 Glass Type 5
Viracon V175 White

88e Glass Type 8
Viracon V948 Medium Grey

Section 08900 GLAZED CURTAIN WALL
Duranar XL UC51713XL Pewter for all components.

Section 09310 CERAMIC TILE
93a Floor Tile:
1. 1x1 Ceramic Mosaic Tile
CT-1 American Olean A32, Sterling Silver
CT-2 American Olean A10, Dawn Grey
CT-3 American Olean A13, White
CT-4 Not used
CT-5 American Olean R25, Marigold
CT-6 American Olean A-34, Raven
CT-7 American Olean R-15, Lavender

2. Not used

93b Wall Tile:
1. 6 x 6 Matte Glazed Wall Tile
CT-17 American Olean 80 Sterling Silver

2. 6 x 6 Matte Glazed Wall Tile with Bullnose Edge
CT-31 American Olean 80 Sterling Silver

3. 2 x 6 Linear Strip Matte Glazed Tile with 6” Bullnose Edge
CT-21 American Olean 80 Sterling Silver

4. 8 x 10 Glazed Tile
CT-19 American Olean 8 x 10 Martinique MT-25, S-4289 Gloss Ice White

5. 2 x 8 Glazed Tile with 8" Bullnose Edge
CT-20 American Olean 8 x 10 Martinique MT-25, S-4289 Gloss Ice White

6. Not Used

7. 4" High 1x1 Ceramic Mosaic Tile Coved Base
CT-22 American Olean A10 Dawn Gray (3 roow 1x1, 1 row C-813 1x1 cove base)
CT-23 American Olean 1" Incorner Cove CB-813 A10 Dawn Gray
CT-24 American Olean 1" Outcorner Cove SC-813 A10 Dawn Gray

Section 09445 RESINOUS TERRAZZO FLOORING
94a Resinous terrazzo flooring:
TZ-1 Not Used
TZ-2 White Marble Chips, 3/8" White Epoxy Terrazzo. REF # 7642
TZ-3 White Marble Chips, Black Marble Chips, Light Gray Marble Chips, with Gray Cement. REF #7132
TZ-4 White, Black, Grey Cement with Black Color. REF # 5712
TZ-5 3/8" Kelp Yellow Epoxy Terrazzo, Orange Synthetic Aggregate, Yellow Marble Chips, Amber Glass Aggregate (substitute), Mother of Pearl Aggregate (substitute). REF # 7379
TZ-6 Dark Gray Marble Chips, Warm Gray Marble Chips, Dark Cement with Black Color. REF #7836
TZ-7 Black Marble Chips, Warm Gray Marble Chips, Dark Cement with Black Color. REF # 7836

Note: Reference number (REF) refers to terrazzo samples provided by DePaoli Mosaic Company.

Section 09446 PRECAST TERRAZZO STAIR TREADS/RISERS AND BASES
94c Pre-cast terrazzo stair treads and risers
TZ-4 to match Resinous Terrazzo Flooring TZ-4 indicated above.

94d Pre-cast terrazzo base (4" high UNO)
TZ-7 to match Resinous Terrazzo Flooring TZ-7 indicated above.

Section 09620 RESILIENT ATHLETIC FLOORING
96.2a Sheet Rubber Flooring – Weight Use Areas
R-7 Mondo Sport Impact 6' wide #008 Black
R-8 Mondo Sport Impact 6' wide #011 Dark Gray
R-9 Mondo Sport Impact 6' wide #018 Light Gray

96.2b Sheet Rubber Flooring – Activity Areas
R-10 Mondo Ramflex 6' wide #G707 Gray
R-11 Mondo Ramflex 6' wide #G708 Black

96.2d Flooring Base Material
Match Resilient Athletic Flooring in room.

Section 09640 WOOD STRIP FLOORING
Vented cove base shall be black.

Section 09650 RESILIENT FLOORING

96.5a Vinyl Composition Tile

VCT-1 Armstrong Imperial Texture, Standard Excelon #51904 Sterling

VCT-2 Armstrong Imperial Texture, Standard Excelon #51899 Cool White

96.5b Vinyl base

VB-1 Johnsonite, 40 (Black)
VB-2 Johnsonite, 40 (Black)
VB-3 Johnsonite, 92 (Blue Lagoon)
VB-4 Johnsonite, 92 (Blue Lagoon)

96.5c Sheet Rubber Flooring

R-1 Mondo Punti #T22 Salsa
R-2 Mondo Punti #T42 Ebony
R-3 Mondo Punti #T33 Dark Gray
R-4 Mondo Punti #T34 Pewter
R-5 Mondo Punti #T11 Iris
R-6 Mondo Punti #T10 Mocha
R-13 Mondo Punti #T14 Angora

96.5d Vented Cove Base

VCB-1 Johnsonite, 40 (Black)

Section 09680 CARPET

96.8a CPT-1

Bentley #BM28-7493 Bull Market/Tan

96.8b CPT-4

Bentley #BZ38-7150 Bryant Park/Riley

96.8c CPT-3

Bentley #SQ34B-8061 Soho Square/Bruschetta

96.8d CPT-2

Bentley #FT-28-7493 Futures/Tan

96.8e CPT-5

Bentley #TT28-7493 Ticker Tape/Tan

96.8f CPT-6

Bentley #BQ38-7155 Bryant Tip/Warren

96.8g CPT-7

Bentley #MH32B-6865 Monarch/Chamberwell

Section 09840 ACOUSTICAL WALL TREATMENT

Color shall match wall color to which panel is mounted.

Section 09900 PAINTING GENERAL

(See also Finish Schedule and drawings for locations.)

PT-1 ICI #1377 (General White)
PT-2 ICI #231 Millstone (General Door +Window Frames)
PT-5 ICI #1674 India Ink (Atrium Structure)
PT-7 ICI #1680 Silver Dust (Natatorium Upper Walls)
PT-10 ICI #249 Portland Cement (3rd + 4th Floor Gym Pilasters)

PT-11 ICI #573 Prarie Sunflower (2nd Floor Gym Pilasters)
PT-12 ICI #1677 Pigeon Gray (Gym/Lower Walls)
PT-13 ICI #502 (Gold/Sport Med. Accent)
PT-14 ICI #1585 (Purple/Sport Med. Accent)
PT-16 Historic, to match existing
PT-19 Intumescent Fireproofing
PT-20 ICI #2010 (Admin. General Wall)
PT-21 ICI #542 (Admin. Accent)
PT-22 ICI #165 (Admin. Accent)
PT-23 ICI #1426 (Admin. Door Trim)
PT-28 Ceiling white
PT-29 ICI #662 German Silver (Hayes + Atrium Nitches)
PT-30 ICI #212 Medieval Gray (Stair Handrails)

PT-31 Duranar Pewter UC51713XL
PT-32 Duranar Champagne Gold UC51568XL

Section 09945 MULTI-COLORED INTERIOR COATINGS
MCP-1 General Zolatone/To match 42c1
MCP-2 Zolatone #45-60052B (Admin)
MCP-3 Accent Zolatone/To match 42c2

Other Items
Existing Steel Sash and frames
Color shall match existing off-white.

Section 10100 VISUAL COMMUNICATIONS SPECIALTIES
101h Lacquer Finished Lecture Cases
Color: Egan Visual Inc. Pearl

Section 10160 TOILET PARTITIONS
101a Toilet Enclosures
Color: Black
101b Urinal Screens
Color: Black

Section 10190 HOSPITAL CUBICLE TRACKS
101c Hospital Cubicle Tracks and Curtains
Curtain Color: Manufacturer’s standard off-white

Section 10200 LOUVERS
Louvers
Duranar XL UC51713XL Pewter for all components.

Section 10500 LOCKERS
105e Standard Lockers
Color: Black
105g Athletic Lockers
Color: Black

Section 10605 WIRE MESH PARTITIONS
106a Wire mesh Partition System
Color: black

Section 11480 ATHLETIC EQUIPMENT
(See Specification Section, Finish Schedule and drawings)

d Wall Padding
PD-1 Color: Yellow to match existing.
PD-2 Color: Gray
PD-3 Color: Black

Section 12600 THEATER CHAIRS
126d Fixed Auditorium Seating
Standards and seat foundation shall be black.
Back plastic shell shall be black.
Arms and end panels shall be transparent finish without stain.
Seat and back upholstery fabric shall be black.
Plastic laminate for tablets shall match PL-10 noted above.

Section 13158 HYDROTHERAPY POOL
Wood shall be clear finished as specified.
Solid tank wall panels shall be as selected by contracting officer from manufacturer’s full color line of not less than 48 colors.

Section 13930 COMBINATION STANDPIPE/SPRINKLER SYSTEM
Concealed sprinkler heads:
Color shall be white.
Exposed sprinklers in historical areas:
Color shall be brown.
Fire department valve cabinet @ 1st floor 'Y' south:
Color shall match wall color.

Section 14210 ELECTRIC ELEVATORS
(See Also Finish Schedule)

142a Passenger Elevator
VCT-1 Armstrong Imperial Texture, Standard Excelon #51904 Sterling

DIVISION 15

Waterclosets:
Color shall be white.

Urinals:
Color shall be white.

Lavatories:
Color shall be white.

Drinking fountains/Cuspidors:
Color shall be stainless steel

Watercooler (P-15):
Color shall be stainless steel

Diffusers, registers, grilles:
Color shall match adjacent wall/ceiling color.

Cabinet unit heaters in entryways and stairwells:
Color shall match adjacent wall color.

Cabinet convectors in activity areas:
Color shall match wall color.

Finned tube radiation in base at option F/G areas:
Color shall match adjacent wall color.

Fan-coil units in remote offices:
Color shall match wall color for in or on-wall unit. Ceiling mounted units shall be white.

Cooling towers:
Color shall match exterior doors.

Roof relief air monitors:
Color shall match exterior doors.

Emergency generator exhaust pipe extension:
Color shall match exterior doors

Exposed return air duct drops in gym areas:
Color shall match adjacent wall color.

Plenums and blank-off panels behind exterior louvers:
Color shall be flat (matte) black.

DIVISION 16

Light Switches:
Color shall be manufacturer’s standard black.

Light Switch plates:
Color shall be stain finish stainless steel.

Receptacles:
Color shall be manufacturer’s standard black.

Receptacle plates:
Color shall be stain finish stainless steel.

Surface metal raceway:
Color shall match wall color.

Telecom plates:
Color shall be manufacturers standard beige.

Telephone handsets:
Color shall be manufacturers standard beige.

Lighting fixture trim kits:
Color shall match adjacent fixture.

Atrium pole lights
Color shall be black.

Fire alarm devices will be "red" in color per the specifications.

AV items:
Color shall be manufacturers standard.

ADDITIONAL ITEM

Stone walls:
Color shall match existing local gray granite material.

Site Rails (not related to steel truss egress bridge superstructure):
Color shall be black.

Exposed piping in historic areas:
Color shall match adjacent wall/ceiling color.

Exposed piping in new building:
Color shall match adjacent wall/ceiling color.

-- END OF SECTION --

SECTION 09945

MULTI-COLORED INTERIOR COATINGS

PART 1 GENERAL

1.1 REFERENCES

The publications listed below form a part of this specification to the extent referenced. The publications are referred to in the text by basic designation only.

AMERICAN SOCIETY FOR TESTING AND MATERIALS (ASTM)

ASTM E 84	(1999) Test Method for Surface Burning Characteristics of Building Material

1.2 SUBMITTALS

Government approval is required for submittals with a "GA" designation; submittals having an "FIO" designation are for information only. The following shall be submitted in accordance with Section 01330 SUBMITTAL PROCEDURES:

SD-01 Data

Multi-Colored Interior Coating Systems; GA.

For each coating system specified. Include block fillers and primers.

1. Material List: Provide a list of required coating materials. Indicate each material and cross-reference specific coating, finish system, and application. Identify each material by manufacturer's catalog number.

2. Manufacturer's Information: Provide manufacturer's technical information, including label analysis and instructions for handling, storing, and applying each coating material proposed for use.

SD-08 Statements

Qualification Statement; FIO.

For firms and persons specified in "Quality Assurance" Article to demonstrate their capabilities and experience. Include lists of completed projects with project names and addresses, names and addresses of architects and owners, and other information specified.

SD-14 Samples

Multi-Colored Interior Coating Systems; GA.

Samples for Verification: For each coating system, color, and pattern specified with a list of materials applied for each coat, labeled for location and application, and on representative Samples of actual substrates. Submit two samples showing the full range of color, texture, and pigment density expected on each substrate and in sizes indicated below.

1. Gypsum Wallboard: 12-inch- (300-mm-) square Samples with taped edges.
2. Concrete: 12-inch- (300-mm-) square Samples.
3. Concrete Masonry: 12-inch- (300-mm-) square Samples of masonry with mortar joint in center.
4. Wood: 12-inch- (300-mm-) square Samples on hardboard.
5. Ferrous Metal: 12-inch- (300-mm-) square Samples of metal sheet and 8-inch- (200-mm-) long Samples of metal shapes.

1.3 QUALITY ASSURANCE

Applicator Qualifications: An experienced applicator who has completed coating system applications similar in material, design, and extent to that indicated for this Project and whose work has resulted in application with a record of successful in-service performance.

Source Limitations: Obtain block fillers, primers, and undercoat materials for each coating system from the same manufacturer as the finish coats.

Fire-Test-Response Characteristics: Provide coatings with the following surface-burning characteristics as determined by testing identical products per ASTM E 84 by UL or another testing and inspecting agency acceptable to authorities having jurisdiction.

1. Flame Spread: 25 or less.
2. Smoke Developed: 450 or less.

Benchmark Samples (Mockups): Provide a full-coat benchmark finish sample of each type of coating and substrate required. Comply with procedures specified in PDCA P5. Duplicate finish of approved sample Submittals.

1. Contracting Officer will select one room or surface to represent surfaces and conditions for application of each type of coating and substrate.

a. Wall Surfaces: Provide samples of at least 100 sq. ft. (9 sq. m).
b. Small Areas and Items: Contracting Officer will designate items or areas required.

2. Notify Contracting Officer seven days in advance of dates and times when mockups will be applied.

3. Apply benchmark samples, according to requirements for the completed Work, after permanent lighting and other environmental services have been activated. Provide required sheen, color, and

texture on each surface.

a. After finishes are accepted, Contracting Officer will use surface to evaluate coating systems of a similar nature.

4. Obtain Contracting Officer's approval of benchmark samples before starting multicolored interior coating application.

1.4 PROJECT CONDITIONS

Environmental Limitations: Do not apply coatings until spaces are enclosed and weatherproof, work above ceilings is complete, and ambient temperature and humidity conditions are maintained at the levels indicated for Project when occupied for its intended use.

1.5 DELIVERY, STORAGE AND HANDLING

Deliver materials to Project site in manufacturer's original, unopened packages and containers bearing manufacturer's name and label, and the following information:

1. Product name or title of material.
2. Product description (binder type).
3. Manufacturer's stock number and date of manufacture.
4. Contents by volume, for pigment and vehicle constituents.
5. Application instructions.
6. Color name and number.

Handle multicolored coatings to minimize agitation and vibration to reduce pigment-cell rupture.

1.6 EXTRA MATERIALS

Furnish extra coating materials, described below, from same production run as materials applied, that are packaged in unopened, factory-sealed containers for storage and identified with labels describing contents and shelf life. Deliver extra materials to Owner.

1. Furnish extra coating materials equal to 5 percent of each material applied, but not less than 1 gal. (3.8 L), for each color and pattern.

PART 2 PRODUCTS

2.1 ACCEPTABLE MANUFACTURERS

Available Products: Subject to compliance with requirements, products that may be incorporated into the Work include, but are not limited to, the products indicated in the Multicolored Interior Coating Schedule at the end of Part 3.

2.2 MULTICOLORED COATING MATERIALS, GENERAL

Material Compatibility: Provide block fillers, primers, finish-coat

materials, and related materials that are compatible with one another and the substrates indicated under conditions of service and application, as demonstrated by manufacturer based on testing and field experience.

Colors and Patterns: As indicated In Section 09915, COLOR SCHEDULE.

PART 3 EXECUTION

3.1 INSPECTION

Examine substrates, areas, and conditions, with Applicator present, for compliance with requirements and conditions affecting performance of coatings.

1. Verify compatibility with and suitability of substrates, including compatibility with existing finishes or primers.
2. Begin coating application only after unsatisfactory conditions have been corrected and surfaces receiving coating are dry.
3. Start of coating application indicates acceptance of surfaces and conditions.

3.2 PREPARATION

General: Remove hardware and hardware accessories, plates, machined surfaces, lighting fixtures, and similar items already installed that are not to be coated. If removal is impractical or impossible because of size or weight of item, provide surface-applied protection before surface preparation and coating.

1. After completing coating operation in each space or area, reinstall items removed using workers skilled in trades involved.

Cleaning: Before applying coatings or other surface treatments, clean substrates of substances that could impair bond of various coatings. Remove oil and grease before cleaning.

1. Schedule cleaning and coating so dust and other contaminants from the cleaning process will not fall on wet, newly coated surfaces.
2. Remove mildew from substrates.

Surface Preparation: Clean and prepare surfaces to be coated according to manufacturer's written instructions for each particular substrate condition and as specified.

1. Provide barrier coats over incompatible primers or remove and reprime.

2. Cementitious Material Surfaces: Prepare concrete, concrete masonry, and cement plaster surfaces to be coated. Remove efflorescence, chalk, dust, dirt, grease, oils, and release agents. Roughen to remove glaze. If hardeners or sealers have been used to improve curing, use mechanical methods of surface preparation.

a. Use abrasive blast-cleaning methods if recommended by coating manufacturer.
b. Determine alkalinity and moisture content of surfaces by performing appropriate tests. If surfaces are sufficiently alkaline to cause finish coating to blister and burn, correct this condition before application. Do not coat surfaces where moisture content exceeds that permitted in manufacturer's written instructions.

Material Preparation: Prepare coating materials according to manufacturer's written instructions.

1. Maintain containers used in applying coatings in a clean condition, free of foreign materials and residue.

3.3 APPLICATION

General: Apply coating according to manufacturer's written instructions. Use applicators and techniques suitable for substrate and coating material applied.

1. Do not apply coating over dirt, rust, scale, grease, moisture, or scuffed surfaces, or under conditions detrimental to forming a durable coating film.
2. Coat exposed surfaces indicated. Exposed surfaces include areas behind movable equipment and furniture.
3. Before installing permanently fixed equipment or furniture, coat concealed areas with prime coat only, unless otherwise indicated.
4. Apply first-coat material to prepared surfaces as soon as practicable after preparation and before surfaces deteriorate.
5. Allow sufficient time between successive coats to permit proper drying. Do not recoat surfaces until coating has dried to where it feels firm, does not deform or feel sticky under moderate thumb pressure, and where applying another coat does not cause undercoat to lift or lose adhesion.

Application Procedures: Apply coatings according to manufacturer's written instructions.

Minimum Coating Thickness: Apply coating materials no thinner than manufacturer's recommended spreading rate. Provide total dry film thickness of system recommended in writing by manufacturer.

Block Fillers: Apply block fillers to concrete masonry block at a rate to ensure complete coverage with pores filled.

Prime Coats: Before applying finish coats, apply a prime coat of material, as recommended by manufacturer, to material required to be coated and not prime coated by others. Recoat primed and sealed surfaces where evidence of suction spots or unsealed areas in first prime coat appears, to ensure a finish coat with no burn through or other defects due to insufficient sealing.

Finish Coats: Match approved Samples for color and pattern with uniform

texture, finish, and appearance.

1. Provide finish coat without undercoats, stains, or other conditions showing through final coating.
2. Provide edges, corners, crevices, welds, and exposed fasteners with a dry film thickness equivalent to that of flat surfaces.
3. Recoat work not complying with requirements.

3.4 CLEANING

At end of each workday, remove empty cans, rags, rubbish, and other discarded coating materials from Project site.

After completing coating work, clean glass and coating-spattered surfaces. Remove spattered coating by washing and scraping. Do not scratch or damage adjacent finished surfaces.

3.5 PROTECTION

Protect work of other trades from damage by coating. Correct damage by cleaning, repairing or replacing, and recoating, as approved by Contracting Officer.

Provide temporary closure to confine spraying operation and to prevent polluting of surrounding environment.

Provide "Wet Paint" signs to protect newly coated finishes.

Remove temporary protective wrappings after completing coating operations.

3.6 REPAIR

At completion of construction activities of other trades, touch up and restore damaged or defaced coated surfaces. Comply with procedures specified in PDCA P1.

3.7 MULTICOLORED INTERIOR COATING SCHEDULE

A. General: Provide the following multicolored interior coating systems for substrates indicated:

B. Concrete Masonry: Multicolored coating system over a block filler and, if required, primer.

1. Concrete Masonry Block Filler: As follows:

    a. Artistic Coatings, Inc.: As recommended by manufacturer.
    b. California Products: Aqua Fleck 80437.
    c. Coronado Paint Co.: Coronado 946-11.
    d. Master Coating Technologies: As recommended by mfg
    e. Multicolor Specialties, Inc.: As recommended by mfg.
    f. Seagrave Coatings Corp.: As recommended by mfg.
    g. Surface Protection Ind. Int.: Polomyx; Polomyx No. 206.
    h. Surface Protection Ind. Int.: Zolatone; Block Filler 96.

i. Vitricon Corp.: As recommended by mfg.

2. Primer: Latex primer sealer.

a. Artistic Coatings, Inc.: As recommended by manufacturer.
b. California Products: As recommended by manufacturer.
c. Coronado Paint Co.: Coronado 120-11.
d. Master Coating Technologies: Primer not required over block filler.
e. Multicolor Specialties, Inc.: Primer not required over block filler.
f. Seagrave Coatings Corp.: Seagrave Duramul-X Primer.
g. Surface Protection Ind. Int.: Polomyx; Primer not required over block filler.
h. Surface Protection Ind. Int.: Zolatone; Zo-Cryl Filler 92.
i. Vitricon Corp.: Primer not required over block filler.

3. Finish Coat: Multicolored coating.

a. Coronado Paint Co.: Toll-O-Fect.
b. Multicolor Specialties, Inc.: Multispec 86 Fine Fleck.
c. Seagrave Coatings Corp.: Plextone Multicolor System.
d. Surface Protection Ind. Int.: Polomyx Multicolor Finish.
e. Surface Protection Ind. Int.: Zolatone 43 Series.
f. Vitricon Corp.: Vitricolor.

C. Concrete: Multicolored coating system over a primer.

1. Prime Coat: Latex primer sealer.

a. Artistic Coatings, Inc.: As recommended by manufacturer.
b. California Products: Aqua Fleck 80425.
c. Coronado Paint Co.: Toll-O-Fect Primer/Sealer 120-11.
d. Master Coating Technologies: As recommended by manufacturer.
e. Multicolor Specialties, Inc.: As recommended by manufacturer.
f. Seagrave Coatings Corp.: Seagrave Duramul-X Primer.
g. Surface Protection Ind. Int.: Polomyx; Polomyx 202 Basecoat.
h. Surface Protection Ind. Int.: Zolatone; Zo-Cryl Sealer 92.
i. Vitricon Corp.: As recommended by manufacturer.

2. Finish Coat: Multicolored coating.

a. Coronado Paint Co.: Toll-O-Fect.
b. Multicolor Specialties, Inc.: Multispec 86 Fine Fleck.
c. Seagrave Coatings Corp.: Plextone Multicolor System.
d. Surface Protection Ind. Int.: Polomyx Multicolor Finish.
e. Surface Protection Ind. Int.: Zolatone 43 Series.
f. Vitricon Corp.: Vitricolor.

D. Gypsum Board: Multicolored coating system over a primer.

1. Prime Coat: Latex primer sealer.

    a. Artistic Coatings, Inc.: As recommended by manufacturer.
    b. California Products: Aqua Fleck 80425.
    c. Coronado Paint Co.: Toll-O-Fect Primer/Sealer 120-11.
    d. Master Coating Technologies: Scuffmaster PVA primer.
    e. Multicolor Specialties, Inc.: As recommended by mfg.
    f. Seagrave Coatings Corp.: Seagrave Duramul-X Primer.
    g. Surface Protection Ind. Int.: Polomyx; Polomyx 202 Basecoat.
    h. Surface Protection Ind. Int.: Zolatone; Zo-Cryl Sealer 92.
    i. Vitricon Corp.: As recommended by manufacturer.

2. Finish Coat: Multicolored coating.

    a. Coronado Paint Co.: Toll-O-Fect.
    b. Multicolor Specialties, Inc.: Multispec 86 Fine Fleck.
    c. Seagrave Coatings Corp.: Plextone Multicolor System.
    d. Surface Protection Ind. Int.: Polomyx Multicolor Finish.
    e. Surface Protection Ind. Int.: Zolatone 43 Series.
    f. Vitricon Corp.: Vitricolor.
    g. Coating system below provides a coating over new plaster.

E. Plaster: Multicolored coating system over a primer.

1. Prime Coat: Latex primer sealer.

    a. Artistic Coatings, Inc.: As recommended by manufacturer.
    b. California Products: Aqua Fleck 80425.
    c. Coronado Paint Co.: Toll-O-Fect Primer/Sealer 120-11.
    d. Master Coating Technologies: Scuffmaster PVA primer.
    e. Multicolor Specialties, Inc.: As recommended by mfg.
    f. Seagrave Coatings Corp.: Seagrave Duramul-X Primer.
    g. Surface Protection Ind. Int.: Polomyx; Polomyx 202 Basecoat.
    h. Surface Protection Ind. Int.: Zolatone; Zo-Cryl Sealer 92.
    i. Vitricon Corp.: As recommended by manufacturer.

2. Finish Coat: Multicolored coating.

    a. Coronado Paint Co.: Toll-O-Fect.
    b. Multicolor Specialties, Inc.: Multispec 86 Fine Fleck.
    c. Seagrave Coatings Corp.: Plextone Multicolor System.
    d. Surface Protection Ind. Int.: Polomyx Multicolor Finish.
    e. Surface Protection Ind. Int.: Zolatone 43 Series.
    f. Vitricon Corp.: Vitricolor.

-- End of Section --

SECTION 10000

MISCELLANEOUS SPECIALTIES

PART 1 GENERAL

1.1 SCOPE OF WORK

Work of this Section includes, but is not limited to, the following:

1. Wall clocks.
2. Wire guards.

1.2 SUBMITTALS

Government approval is required for submittals with a "GA" designation; submittals having an "FIO" designation are for information only. The following shall be submitted in accordance with Section 01330 SUBMITTAL PROCEDURES:

SD-01 Data

Wall Clocks; GA.

Submit manufacturer's standard product data, showing complete information on wall clocks. Include dimensions and finishes.

PART 2 PRODUCTS

2.1 WALL CLOCKS

Provide surface mounted, 12 inch nominal diameter round analog clocks where indicated as follows:

1. Dial: Painted metal with silk-screened black on white hour numbers and minute marks. Hour numbers shall be sans serif typeface equal to Helvetica Medium, 1.5 inches nominal high.
2. Hands: Black painted metal, tapered.
3. Second Hand: Red painted metal sweep.
4. Case material: Aluminum, satin or brushed finished.
5. Crystal: Shatterproof flat glass.
6. Movement, 115 volts, 60 Hz synchronous motored. Motor shall be wired with plug to match outlets required.

At rooms Y040 Instructional Pool and Z020 Intramural pool provide wall clocks where indicated as follows:

1. Dial: Painted aluminum with silk-screened black on white hour numbers and minute marks. Hour numbers shall be sans serif typeface equal to Helvetica Medium, 1.5 inches nominal high.

2. Hands: Black painted metal, tapered.
3. Second Hand: Red painted metal sweep.
4. Case material: Cast aluminum with spun aluminum front bezel, painted matte black finish.
5. Crystal: Shatterproof flat glass.
6. Movement, 115 volts, 60 Hz synchronous motored. Motor shall be wired with plug to match outlets required.
7. Clock shall be recommended by manufacturer for swimming pool environments.

2.2 WIRE GUARDS

Wire guards shall be manufactured by a firm regularly engaged in the fabrication of wire guards and as follows:

1. Wire shall be 6 gauge (0.192 inch) steel wire conforming to ASTM A-510.
2. Guards shall be machine formed in circular, radial or grid patterns spaced to reject a 2 inch diameter sphere. At fire alarm pull stations provide openings required to access device. Wire guards shall match protected device shapes with straight lines, true curves and sharp bends.
3. Guards shall include full perimeter base frame wire or flat bar configured to fit flush to surface on which device is mounted with formed loops or pre-drilled holes for fasteners.
4. All intersections shall be fully welded.
5. Guard shall provide 1 inch nominal clear from all surfaces of device to be protected. At fire alarm pull stations provide working clearance for device operation.
6. Guard shall be hot dip galvanized, primed and shop painted matte black after fabrication.
7. Wire guard shall be secured to surfaces with not less than 4 suitably sized corrosion resistant screws. At suspended acoustical panels provide framing matching ceiling suspension system connected to ceiling suspension system at concealed face of panels to receive screws and prevent loading of panel. Provide stainless steel screws at rooms containing pools.

PART 3 EXECUTION

3.1 WALL CLOCK INSTALLATION

Before installation of clocks, check substrate materials, blockings, and built-in anchors for adequacy to support the clocks.

Mount clocks securely to walls at locations indicated, tightly anchored into place, and with trim fitted tightly and neatly against the wall surface.

Electrical Connection: Connect wires to electric box in wall. Electric box and power is provided under Division 16, ELECTRICAL.

Deliver to Owner operations and maintenance manuals, properly tagged as to location of each type of clock.

3.2 WIRE GUARD INSTALLATION

In rooms A202 Hayes Gymnasium, Y040 Instructional Pool, Y240 Gymnasium, Y440 Gymnasium, and Z020 Intramural Pool, provide surface mounted wire guards to protect all devices such as clocks, thermostats, fire alarm devices, (including pull stations, visual devices, audible devices), grills, speakers, annunciators for Scoring Devices, and the like. Secure wire guard to surface on which device is mounted centered on device. At acoustical and suspended ceilings install at concealed surface of panels framing to support wire guard suitably connected to ceiling suspension system. Pre-drill holes and screw secure wire guard to surface or framing as applicable.

-- End of Section --

SECTION 10100

VISUAL COMMUNICATIONS SPECIALTIES

PART 1 GENERAL

1.1 GENERAL REQUIREMENTS

The term visual display board when used herein includes visual aid board units, marker boards, tackboards, board cases, display track system and horizontal sliding units. Visual display boards shall be from manufacturer's standard product line.

1.2 SUBMITTALS

Government approval is required for submittals with a "GA" designation; submittals having an "FIO" designation are for information only. The following shall be submitted in accordance with Section 01330 SUBMITTAL PROCEDURES:

SD-01 Data

Visual Display Boards; GA.

Manufacturer's descriptive data and catalog cuts.

SD-04 Drawings

Shop Drawings; GA

Provide large scale shop drawings for fabrication, installation and erection of all parts of the work. Provide plans, elevations, and details of anchorages, connections and accessory items. Provide large scale sections and details of trim profiles and materials. Include schedule of sizes and locations of visual display boards by room numbers.

SD-06 Instructions

Visual Display Boards; FIO.

Manufacturer's installation instructions, and cleaning and maintenance instructions.

SD-13 Certificates

Visual Display Boards; FIO.

Certificate of compliance signed by Contractor attesting that visual display boards conform to the requirements specified.

SD-14 Samples

Aluminum; GA.

Sections of frame, map rail, and chalktray, and two map hooks.

Porcelain Enamel; GA.

Section showing porcelain enamel coating, steel, core material and backing.

Materials; GA.

Section of core material showing the lamination of colored cork, natural cork, woven fabric, non-woven fabric, and vinyl wall covering. Sample of hardwood and plastic laminate finish, and glass type. Samples shall be minimum 8 by 8 inches and show range of color.

1.3 DELIVERY, STORAGE AND HANDLING

Materials shall be delivered to the building site in the manufacturer's original unopened containers and shall be stored in a clean dry area with temperature maintained above 50 degrees F. Materials shall be stacked according to manufacturer's recommendations. Visual display boards shall be allowed to acclimate to the building temperature for 24 hours prior to installation.

1.4 WARRANTY

Manufacturer's standard performance guarantees or warranties that extend beyond a one year period shall be provided.

PART 2 PRODUCTS

2.1 GENERAL

Visual communications specialties shall be manufactured by firm specializing in the manufacture of the required visual communication specialties. No manufacturer's identification shall be visible in the finished work.

Aluminum Trimmed Markerboards and Aluminum Trimmed Tackboards shall be by the same manufacturer.

Wood Finished Lecture Cases and Lacquer Finished Lecture Cases shall be by the same manufacturer.

2.2 ALUMINUM TRIMMED MARKERBOARDS

Provide factory assembled porcelain enamel markerboards fabricated from 24 gauge enameling steel face sheet conforming to the requirements of ASTM A-424, with three coat porcelain fused to steel with not less than two firings at 1200 degrees F. Face sheet shall be laminated to 7/16 inch thick hardboard core with hot-type neoprene contact adhesive applied to both surfaces providing 80 percent coverage minimum and 1.5 mil dry film thickness on each surface. Back of hardboard shall be covered by fully

adhered 0.015 inch thick aluminum sheet. Face sheet color and finish shall be gloss white recommended by manufacturer for use as marking surface and shall accept magnetic aids. Markerboards shall be one piece in sizes indicated.

Markerboards shall have factory applied, full perimeter clear anodized extruded aluminum two piece channel trim, 1.5 inches wide projecting 0.25 inches from face of markerboard. Perimeter trim shall cover all board edges and return 1 inch nominal along back face. Corners shall be mitered. Provide box chalktrough full length along bottom edge of markerboards with sloped bottom and angled cast aluminum end caps. Chalktrough shall match channel trim and shall cover board edge. All trim edges shall be eased/radiused to eliminate sharp corners. Trim fasteners shall not be visible on face of trim.

Provide angle mounting clips screwed to wall and board/trim edge at 24 inches on center around board. Clips shall match trim. Screws shall be corrosion resistant and suitable for wall materials and substrates. No adhesives or mastics shall be used for mounting.

2.2.1 Additional Aluminum Trimmed Markerboards

In addition to markerboards indicated provide an additional twenty-five (25) aluminum trimmed markerboards, 36 inches wide by 48 inches high to be located in the third floor administration areas of Building Z. Additional markerboards shall be provided in locations as directed by the contracting officer. Additional markerboards shall match the requirements above for Aluminum Trimmed Markerboards, except the perimeter extruded aluminum channel trim shall extend fully around board and the chalktrough shall be a removable extruded aluminum flat bottom type 24 inches long magnetically mounted to board face.

2.3 ALUMINUM TRIMMED TACKBOARDS

Provide factory assembled tackboards fabricated from a face sheet of 1/4 inch thick homogeneous blend of granulated cork, linseed oil and coloring agents laminated to a woven jute (burlap) carrier. Face sheet shall be fully adhered to a 3/8 inch fiberboard backing. Face sheet color shall extend through full thickness of face sheet and shall be manufacturer's standard medium grey color. Tackboards shall be one piece in sizes indicated.

Tackboards shall have factory applied, full perimeter clear anodized extruded aluminum two piece channel trim, 1.5 inches wide projecting 0.25 inches from face of tackboard. Perimeter trim shall cover all board edges and return 1 inch nominal along back face. Corners shall be mitered. All trim edges shall be eased/radiused to eliminate sharp corners. Trim fasteners shall not be visible on face of trim. Trim shall match trim required for Aluminum Trimmed Markerboards.

Provide angle mounting clips screwed to wall and board/trim edge at 24 inches on center around board. Clips shall match trim. Screws shall be corrosion resistant and suitable for wall materials and substrates. No adhesives or mastics shall be used for mounting.

2.3.1 Additional Aluminum Trimmed Tackboards

In addition to tackboards indicated provide an additional twenty-five (25) aluminum trimmed tackboards, 36 inches wide by 48 inches high to be located in the third floor administration areas of Building Z. Additional tackboards shall be provided in locations as directed by the contracting officer. Additional tackboards shall match the requirements above for Aluminum Trimmed Tackboards.

2.4 ALUMINUM FRAMED DISPLAY BOARDS

Provide factory assembled, surface mounted, aluminum framed display boards. Aluminum framed display boards shall have full perimeter clear anodized extruded aluminum case frame projecting 3 inches from wall surface with 1 inch nominal face. Case frame shall include clear anodized extruded aluminum door stop and receiver channel for tackboard.

Provide two 1/4 inch thick clear tempered glass doors over full case face with continuous side hinges and keyed cylinder type locks. Tempered glass shall comply with the requirements of Section 08810 GLASS AND GLAZING. Tempered glass doors shall have full perimeter clear anodized extruded aluminum frame with 1.25 inch face to match case frame. Doors shall be flush with case frame face in the closed locked position. Case frame and door frame corners shall be mitered. All edges shall be eased/radiused to eliminate sharp corners. Fasteners shall not be visible on face of frames.

Inside of case frame shall have tackboard face sheet and backing to match requirements for Aluminum Framed Tackboards above over full board area.

Aluminum framed display boards shall be 48 inch high by 48 inch wide overall, unless required otherwise. Provide concealed mounting to wall. Screws shall be stainless steel and suitable for wall materials and substrates. No adhesives shall be used for mounting.

2.5 WOOD FINISH LECTURE CASES

Provide factory assembled, surface mounted, wood finished lecture cases. Wood finished lecture cases shall have wood trimmed cases with side swinging bi-parting doors. Cases shall be 48 inches high by 72 inches long by 3.75 inches deep with the doors closed.

Wood Finish Lecture Cases shall have all exposed components including trim and doors of transparent finished Select White Maple solid wood and veneer complying with the requirements of section 06400 ARCHITECTURAL WOODWORK for Wood Cabinets for Transparent Finish except as required herein. No stain is required or shall be used. Corners of case trim and doors shall be radiused and bullnosed. Bottom edge of case trim shall form chalktrough.

Case shall have interior top mounted, pull down 60 inch wide matte white spring roller projection screen. Inside of case shall have markerboard complying with the requirements for Aluminum Trimmed Markerboards above, except no aluminum trim shall be required, extending across full rear surface. Edge of case shall be configured to conceal edge of markerboard.

Doors shall be 1.5 inches thick, 180 degree side swing, continuously hinged with top mounted magnetic or spring catch. Hinges shall be cadmium plated. Doors shall be flush type with bottom edge formed for finger pull. Door shall fully overlay case with corners radiused and bullnosed to match case. Exterior of doors shall be wood veneer of type and species required with solid wood frame configured to conceal edge of tackboard. Interior of doors shall have tackboard complying with the requirements for Aluminum Trimmed Tackboards above, except no aluminum trim shall be required, extending across full interior surface.

Provide concealed mounting clips and screws. Screws shall be corrosion resistant and suitable for wall materials and substrates. No adhesives shall be used for mounting.

2.6 LACQUER FINISHED LECTURE CASES

Provide factory assembled, surface mounted, pigmented lacquer finished lecture cases. Lacquer Finished Lecture Cases shall match Wood Finished Lecture Cases for details and construction including tackboards and markerboards but shall be constructed of high density fiberboard finished with a satin sheen pigmented lacquer in lieu of transparent solid wood and veneers at all surfaces. Color shall be as required in section 09915 COLOR SCHEDULE.

PART 3 EXECUTION

3.1 INSPECTION

Examine substrates, supports, and conditions detrimental to the proper completion of the work. Do not proceed with work until unsatisfactory conditions are corrected. Beginning of installation will be construed as installer accepting substrates and conditions.

3.2 INSTALLATION

General Installation Requirements: Strictly comply with manufacturer's instructions and recommendations, except where more restrictive requirements are specified in this section.

Install visual display boards with concealed anchors at heights indicated, or if not indicated, as field directed, with work plumb and level. Provide trim pieces, anchors, and components necessary for a complete installation.

3.3 TOLERANCES

The following allowable installed tolerances are allowable variations from locations and dimensions indicated by Contract Documents. Do not add these tolerances to any allowable tolerances indicated for other work.

1. Allowable Variation from True Plumb: + 1/8 in. in 20 ft.-0 in.
2. Allowable Variation from True Line: + 1/8 in. in 20 ft.-0 in.
3. Allowable Variation from True Level: + 1/8 in. in 20 ft.-0 in.

3.4 CLEANING, TOUCH-UP, AND PROTECTION

Clean exposed surfaces using manufacturer recommended materials and methods. Remove and replace work that cannot be successfully cleaned.

Touch-up damaged coatings and finishes. Eliminate visible evidence of repair.

Provide temporary protection during course of work, and immediately after completion, to ensure work of this Section is not damaged or deteriorated in any way at time of final acceptance. Remove temporary protections and reclean as necessary immediately prior to final acceptance.

-- End of Section --

SECTION 10160

TOILET PARTITIONS

PART 1 GENERAL

1.1 REFERENCES

The publications listed below form a part of this specification to the extent referenced. The publications are referred to in the text by basic designation only.

AMERICAN SOCIETY FOR TESTING AND MATERIALS (ASTM)

ASTM A 666	(1998) Austenitic Stainless Steel Sheet, Strip, Plate, and Flat Bar

COMMERCIAL ITEM DESCRIPTIONS (CID)

CID A-A-60003	Partitions, Toilet, Complete

1.2 SYSTEM DESCRIPTION

Toilet partition system, including toilet enclosures, room entrance screens, and urinal screens, shall be a complete and usable system of panels, hardware, and support components. The partition system shall be provided by a single manufacturer and shall be a standard product as shown in the most recent catalog data. The partition system shall be as shown.

1.3 SUBMITTALS

Government approval is required for submittals with a "GA" designation; submittals having an "FIO" designation are for information only. The following shall be submitted in accordance with Section 01330 SUBMITTAL PROCEDURES:

SD-01 Data

Toilet Partition System; GA.

Manufacturer's technical data and catalog cuts including installation and cleaning instructions.

SD-04 Drawings

Toilet Partition System; GA.

Drawings showing plans, elevations, details of construction, hardware, reinforcing, fittings, mountings, and anchorings.

SD-14 Samples

Toilet Partition System; GA.

Manufacturer's standard color charts and color samples.

1.4 DELIVERY, STORAGE, AND HANDLING

Components shall be delivered to the jobsite in the manufacturer's original packaging with the brand, item identification, and project reference clearly marked. Components shall be stored in a dry location that is adequately ventilated; free from dust, water, or other contaminants; and shall have easy access for inspection and handling.

1.5 WARRANTY

Manufacturer's standard performance guarantees or warranties that extend beyond a 1 year period shall be provided.

PART 2 PRODUCTS

2.1 TOILET ENCLOSURES

Toilet enclosures shall conform to CID A-A-60003, Finish 5, Style C, overhead braced. Width and length of toilet enclosures shall be as shown. Panels shall be solid polyethylene plastic. Panels indicated to receive toilet paper holders or grab bars as specified in Section 10800 TOILET ACCESSORIES, shall be prepared for mounting of the items required. Grab bars shall withstand a bending stress, shear stress, shear force, and a tensile force induced by 250 lbf. Grab bars shall not rotate within their fittings.

1. Panels and doors shall be 55 in. high and mounted 14 in. off the floor. Pilasters shall be 82 in. high.

2.2 URINAL SCREENS

Urinal screens shall conform to CID A-A-60003, and shall match the toilet enclosures in finish, and shall be wall hung. Height of screens shall match the toilet enclosures, and width shall be 24 in.

2.3 ACCEPTABLE MANUFACTURERS

Provide products of one of the following manufacturers that meet or exceed specified requirements:

1. Capitol Partitions, Inc.
2. Columbia Partitions, Inc.
3. Knickerbocker Partition Corp.
4. Sanatec Industries, Inc.
5. Santana Products Co.

2.4 MATERIALS

2.4.1 Solid-Plastic, Polymer Resin:

High-density polyethylene (HDPE) with homogenous color throughout. Provide material not less than 1 inch thick with seamless construction and eased edges in color and pattern as indicated in Section 09915, COLOR SCHEDULE.

2.4.2 Pilaster Shoes and Sleeves (Caps):

ASTM A 666, Type 302 or 304 stainless steel, not less than 0.0312 inch thick and 3 inches high, finished to match hardware.

2.4.3 Full-Height (Continuous) Brackets:

Manufacturer's standard design for attaching panels and screens to walls and pilasters of the following material:

1. Material: Stainless steel.

2.4.4 Hardware and Accessories:

Manufacturer's standard design, heavy-duty operating hardware and accessories of the following material:

1. Material: Stainless steel.

2.4.5 Overhead Bracing:

Manufacturer's standard continuous, extruded-aluminum head rail with antigrip profile in manufacturer's standard finish.

2.4.6 Heat-Sink Strip:

Manufacturer's standard continuous, extruded-aluminum strip in manufacturer's standard finish.

2.4.7 Anchorages and Fasteners:

Manufacturer's standard exposed fasteners of stainless steel or chrome-plated steel or brass, finished to match hardware, with theft-resistant-type heads. Provide sex-type bolts for through-bolt applications. For concealed anchors, use hot-dip galvanized or other rust-resistant, protective-coated steel.

2.5 FABRICATION

2.5.1 General:

Provide standard doors, panels, screens, and pilasters fabricated for compartment system. Provide units with cutouts and drilled holes to receive compartment-mounted hardware, accessories, and grab bars, as indicated.

2.5.2 Solid-Plastic, Polymer-Resin Compartments and Screens:

Provide aluminum heat-sink strips at exposed bottom edges of HDPE units to prevent burning.

2.5.3 Overhead-Braced-and-Floor-Anchored Compartments:

Provide manufacturer's standard corrosion-resistant supports, leveling mechanism, fasteners, and anchors at pilasters to suit floor conditions. Make provisions for setting and securing continuous head rail at top of each pilaster. Return head rails to walls when end pilaster is not at wall. Provide shoes at pilasters to conceal supports and leveling mechanism.

2.5.4 Doors:

Unless otherwise indicated, provide 24-inch wide in-swinging doors for standard toilet compartments and 36-inch wide out-swinging doors with a minimum 32-inch wide clear opening for compartments indicated to be handicapped accessible.

1. Hinges: Manufacturer's standard self-closing type that can be adjusted to hold door open at any angle up to 90 degrees. Adjust in-swing doors to hold open 30 degrees. Out-swing doors shall be self-closing.

2. Latch and Keeper: Manufacturer's standard surface-mounted latch unit with combination rubber-faced door strike and keeper designed for emergency access. Provide units that comply with accessibility requirements of authorities having jurisdiction at compartments indicated to be handicapped accessible. All latches shall be operable with a closed fist.

3. Coat Hook: Manufacturer's standard combination hook and rubber-tipped bumper, sized to prevent door from hitting compartment-mounted accessories shall be provided at each in-swinging door.

4. Door Bumper: Manufacturer's standard rubber-tipped bumpers at out-swinging doors to prevent doors from hitting other work.

5. Door Pull: Manufacturer's standard unit that complies with accessibility requirements of authorities having jurisdiction at out-swinging doors. Provide units on both sides of doors at compartments indicated to be handicapped accessible.

6. Coat Hook: Manufacturer's standard combination hook and rubber-tipped bumper, 2 inches long shall be provided in each out-swinging door stall. Locate coat hook on stall side intermediate panel or wall at hinge side of door, 48 inches from floor and 12 inches from corner.

2.6 COLORS

Color of finishes for toilet partition system components shall be as specified in Section 09915 COLOR SCHEDULE.

PART 3 EXECUTION

3.1 INSTALLATION

Toilet partitions shall be installed straight and plumb in accordance with approved manufacturer's instructions with horizontal lines level and rigidly anchored to the supporting construction. Where indicated, anchorage to walls shall be by through-bolting. Drilling and cutting for installation of anchors shall be at locations that will be concealed in the finished work.

3.2 ADJUSTING AND CLEANING

Doors shall have a uniform vertical edge clearance of approximately 3/16 inch and shall rest open at approximately 30 degrees when unlatched. Baked enamel finish shall be touched up with the same color of paint that was used for the finish. Toilet partitions shall be cleaned in accordance with approved manufacturer's instructions and shall be protected from damage until accepted.

-- End of Section --

SECTION 10190

HOSPITAL CUBICLE TRACKS

PART 1 GENERAL

1.1 REFERENCES

The publications listed below form a part of this specification to the extent referenced. The publications are referred to in the text by basic designation only.

NATIONAL FIRE PROTECTION ASSOCIATION (NFPA)

NFPA 701	(1996) Methods of Fire Tests for Flame-Resistant Textiles and Film

1.2 SUBMITTALS

Government approval is required for submittals with a "GA" designation; submittals having an "FIO" designation are for information only. The following shall be submitted in accordance with Section 01330 SUBMITTAL PROCEDURES:

SD-01 Data

Product Data; GA.

Include durability, fade resistance, and fire-test-response characteristics for curtain fabric.

SD-04 Drawings

Cubicle Curtain Shop Drawings; GA

Show layout and types of cubicles, sizes of curtains, number of carriers, anchorage details, and conditions requiring accessories. Indicate dimensions taken from field measurements.

1. Include details on blocking above ceiling and in walls as applicable.

Cubicle Curtain Coordination Drawings; FIO

Reflected ceiling plans drawn to scale and coordinating penetrations and ceiling-mounted items. Show the following:

1. Ceiling suspension assembly members.
2. Method of attaching track hangers to building structure.
3. Ceiling-mounted items including light fixtures, diffusers,

grilles, speakers, sprinklers, and access panels.

SD- 07 Schedules

Cubicle Schedule; GA

Submit cubicle schedule, indicating room numbers, quantity of cubicles, curtain sizes, length of track, etc. Use same room designations as indicated on Drawings.

SD-13 Certificates

Product Certificates; FIO

Submit certificates, signed by manufacturers of tracks and curtains certifying that products furnished comply with specified requirements.

SD-14 Samples

Curtain Fabric; SD-GA

12-inch square swatch or larger Sample as required to show complete pattern repeat, from dye lot used for the Work, with specified treatments applied. Mark top and face of material.

Mesh Top; SD-GA

Not less than 4 inches square.

Curtain Track; SD-GA

Not less than 4 inches long.

Curtain Carrier; SD-GA

Full-size unit.

1.3 WORK INCLUDED

The work of this Section consists of providing cubicle curtain tracks and hardware, curtains, and related items to complete the work as indicated on the Drawings and as specified herein.

1.4 PERFORMANCE REQUIREMENTS

Curtains: Provide curtain fabrics with the following characteristics:

1. Fabrics are launderable to a temperature of not less than 160 deg F.

2. Fabrics are flame resistant and are identical to those that have passed NFPA 701 when tested by a testing and inspecting agency acceptable to authorities having jurisdiction.

1.5 QUALITY ASSURANCE

Mockups: Build mockups to verify selections made under Sample submittals and to demonstrate aesthetic effects and qualities of materials and execution.

1. Build mockups of typical cubicle, complete with track, curtain, as shown on Drawings.
2. Approved mockups may become part of the completed Work if undisturbed at time of Substantial Completion.

1.6 PROJECT CONDITIONS

1.6.1 Environmental Limitations:

Do not install cubicles until spaces are enclosed and weatherproof, wet work in spaces is complete and dry, work above ceilings is complete, and ambient temperature and humidity conditions are maintained at the levels indicated for Project when occupied for its intended use.

1.6.2 Field Measurements:

Where cubicles are indicated to fit to other construction, verify dimensions of other construction by field measurements before fabrication and indicate measurements on Shop Drawings. Coordinate fabrication schedule with construction progress to avoid delaying the Work.

1.7 EXTRA MATERIALS

Furnish extra materials described below that match products installed and that are packaged with protective covering for storage and identified with labels describing contents.

1. Curtain Carriers and Track End Caps: Full-size units equal to 3 percent of amount installed for each size indicated, but not less than 10 units.

2. Curtains: Full-size units equal to 10 percent of amount installed for each size indicated, but not less than 2 units.

PART 2 PRODUCTS

2.1 MANUFACTURERS

Available Manufacturers: Subject to compliance with requirements, manufacturers offering products that may be incorporated into the Work include, but are not limited to, the following:

1. ADC Hospital Equipment, Division of Automatic Devices Company;
2. Creative Healthcare Products Inc.;
3. General Cubicle Company Inc.;
3. Imperial Fastener Company;
4. Kirsch;
5. A. R. Nelson Co.;

6. Pryor Products;
7. Salsbury Industries.

2.2 CURTAIN TRACKS

2.2.1 Extruded-Aluminum Track:

Not less than 1-3/8 inches wide by 3/4 inch high; with minimum wall thickness of 0.058 inch.

1. Curved Track: Factory fabricated 12-inch radius bends.
2. Finish: Satin anodized.

2.2.2 Track Accessories:

Fabricate splices, end caps, connectors, end stops, coupling and joining sleeves, wall flanges, brackets, ceiling clips, and other accessories from same material and with same finish as track.

1. Suspended Track Support: Manufacturers standard system for mounting through suspended ceiling to furring above. Provide furring channels, acoustic tile tube spacers, continuous metal furring over tracks, and 9 gage wire suspension system.
2. End Stop: Removable with carrier hook.

2.2.3 Curtain Carriers:

Two nylon rollers and nylon axle with chrome-plated steel hook.

Exposed Fasteners: Stainless steel.

Concealed Fasteners: Stainless steel.

2.3 CURTAINS

2.3.1 Curtain Fabric:

Cubicle manufacturer's standard, as follows:

1. Color: Refer to Section 09915, COLOR SCHEDULE.

2. Fiber Content: 100 percent polyester, inherently and permanently flame resistant.

2.3.2 Mesh Top:

No. 50 nylon mesh.

2.3.3 Curtain Grommets:

Two-piece, rolled-edge, rustproof, nickel-plated brass; spaced not more than 6 inches o.c.; machined into top hem.

2.3.4 Curtain Tieback:

Nickel-plated brass chain; one at each curtain termination.

2.4 CURTAIN FABRICATION

Fabricate curtains to comply with the following requirements:

1. Width: Equal to track length from which curtain is hung plus 10 percent added fullness, but not less than 12 inches added fullness.

2. Length: Equal to floor-to-ceiling height, with 20-inch mesh top, and minus distance above finished floor at bottom of 12 inches.

3. Mesh Top: Top hem not less than 1 inch and not more than 1-1/2 inches wide, triple thickness, reinforced with integral web, and double lock stitched. Double lock stitch bottom of mesh directly to 1/2-inch triple thickness, top hem of curtain fabric.

4. Bottom Hem: Not less than 1 inch and not more than 1-1/2 inches wide, double thickness and double lock stitched.

5. Side Hems: Not less than 1/2 inch and not more than 1-1/4 inches wide, with double turned edges, and single lock stitched.

6. Vertical Seams: Not less than 1/2 inch wide, double turned and double stitched.

2.4 3 EXECUTION

3.1 INSTALLATION

3.1.1 General:

Install tracks level and plumb, according to manufacturer's written instructions. Provide track fabricated from one continuous length up to 16 feet.

1. Curtain Track Mounting: Surface, in locations indicated on Drawings.

3.1.2 Surface Track Mounting:

Fasten surface-mounted tracks at intervals of not less than 24 inches. Fasten support at each splice and tangent point of each corner. Center fasteners in track to ensure unencumbered carrier operation. Attach track to ceiling as follows:

1. Mechanically fasten to furring through suspended ceiling with screw and tube spacer.

3.1.3 Track Accessories:

Install splices, end caps, connectors, end stops, coupling and joining

sleeves, and other accessories as required for a secure and operational installation.

3.1.4 Curtain Carriers:

Provide curtain carriers adequate for 6-inch spacing along the full length of the curtain plus an additional carrier.

3.1.5 Curtains:

Hang curtains on each curtain track. Secure with curtain tieback.

-- End of Section --

SECTION 10200

LOUVERS

PART 1 GENERAL

1.1 REFERENCES

The publications listed below form a part of this specification to the extent referenced. The publications are referred to in the text by basic designation only.

AMERICAN SPOCIETY FOR TESTING AND MATERIALS (ASTM)

ASTM B 221	Aluminum-Alloy Extruded Bars, Rods, Wire, Shapes, and Tubes

1.2 SUBMITTALS

Government approval is required for submittals with a "GA" designation; submittals having an "FIO" designation are for information only. The following shall be submitted in accordance with Section 01330 SUBMITTAL PROCEDURES:

SD-01 Data

Louvers; GA, Finish; GA

Submit descriptive data of louvers including standard drawings, louver free area, and installation instructions.

Provide manufacturer's standard printed product data for specified finish coating system.

SD-04 Drawings

Louvers; GA.

Shop drawings shall include details of fabrication and erection, anchorage, accessories and finishes.

SD-14 Samples

Louvers; GA.

Samples shall include sample louver section which indicates frame corner construction, blade construction, typical welds and specified finish.

1.3 SCOPE OF WORK

Provide exterior metal louvers. Refer to Louver Schedules and Drawings for extent of work.

1.2 PRODUCT DELIVERY, STORAGE, AND HANDLING

Deliver louvers to project site, fully identified, and protected by padded blankets, scheduled to arrive at time of erection sequence requirements.

Store louvers off ground, under cover, protected from weather and construction operations.

Handle louvers during transportation and installation in a manner that prevents racking or damage to finish or adjacent construction.

PART 2 PRODUCTS

2.1 ACCEPTABLE MANUFACTURERS

Metal wall louvers shall be the products of one of the following manufacturers, or approved equal:

1. Airolite Company, Marietta, OH, 45750.
2. Construction Specialties Inc., Cranford, NJ 07016.
3. Industrial Louvers, Inc., Delano, MN 55328.

Manufacturer's model designations have been specified to establish standards of quality and performance.

2.2 MATERIALS

2.2.1 Aluminum Extrusions:

1. ASTM B 221, alloy 6063-T52.
2. Minimum thickness: 0.081 in.

2.2.2 Attachment Hardware:

Aluminum or stainless steel.

2.3 FABRICATION

Exterior stormproof louvers shall be 4 in. deep, continuous blade, with 55% minimum free air area and channel frame as indicated.

1. Provide Construction Specialties Model No. A4085, or approved equal from another specified manufacturer.

Assemble louvers by heli-arc welding. Arrange louvers in full height and width panels without exposed vertical mullions.

Heads, sills, and jambs shall be one piece structural members. Manufacturer shall provide all necessary structural supports and bracing to carry wind load of not less than 20 psf.

Bird Screens: Bird screens are specified as work of Section 15895 AIR SUPPLY, DISTRIBUTION, VENTILATION, AND EXHAUST SYSTEM.

2.4 FINISH

Comply with NAAMM "Metal Finishes Manual" for recommendations relative to applying and designating finishes.

Finish designations prefixed by AA conform to the system established by the Aluminum Association for designating aluminum finishes.

Finish louvers to match other aluminum components on the project, including curtain wall framing; aluminum windows; and exterior metal wall panels.

High-Performance Organic Coating Finish: AA-C12C42R1x (Chemical Finish: cleaned with inhibited chemicals; Chemical Finish: acid chromate-fluoride-phosphate conversion coating; Organic Coating: as specified below). Prepare, pretreat, and apply coating to exposed metal surfaces to comply with coating and resin manufacturer's instructions.

1. Fluoropolymer 3-Coat Coating System: Provide 3-coat, thermocured, metallic finish system composed of specially formulated inhibitive primer, fluoropolymer color coat, and clear fluoropolymer topcoat, with both color coat and clear topcoat containing not less than 70 percent polyvinylidene fluoride resin by weight; complying with AAMA 605.2. Coating shall be equal to PPG Duranar XL.

2. Color and Gloss: As indicated in Section 09915, COLOR SCHEDULE.

2.4.1 Salt Spray Test

A sample of the sheets shall withstand a salt spray test for a minimum of 3000 hours in accordance with ASTM B 117, including the scribe requirement in the test. Immediately upon removal of the panel from the test, the coating shall receive a rating of not less than 8F, few no. 8 blisters, as determined by ASTM D 714.

2.4.2 Formability Test

When subjected to testing in accordance with ASTM D 522 Method B, 1/8 inch diameter mandrel, the coating film shall show no evidence of fracturing to the naked eye.

2.4.3 Accelerated Weathering, Chalking Resistance and Color Change

A sample of the sheets shall be tested in accordance with ASTM D 4587. The coating shall withstand the weathering test without cracking, peeling, blistering, loss of adhesion of the protective coating, or corrosion of the base metal. Protective coating that can be readily removed from the base metal with tape in accordance with ASTM D 3359, Test Method B, shall be considered as an area indicating loss of adhesion. Following the accelerated weathering test, the coating shall have a chalk rating not less than No. 8 in accordance with ASTM D 4214 test procedures, and the color change shall not exceed 5 CIE or Hunter Lab color difference (delta E)

units in accordance with ASTM D 2244. For sheets required to have a low gloss finish, the chalk rating shall be not less than No. 6 and the color difference shall be not greater than 7 units.

2.4.4 Humidity Test

When subjected to a humidity cabinet test in accordance with ASTM D 2247 for 3000 hours, a scored panel shall show no signs of blistering, cracking, creepage or corrosion.

2.4.5 Impact Resistance

Factory-painted sheet shall withstand direct and reverse impact in accordance with ASTM D 2794 0.500 inch diameter hemispherical head indenter, equal to 1.5 times the metal thickness in mils, expressed in inch-pounds, with no loss of adhesion.

2.4.6 Abrasion Resistance Test

When subjected to the falling sand test in accordance with ASTM D 968, Method A, the coating system shall withstand a minimum of 170 - 220 liters of sand before the appearance of the base metal. The term "appearance of base metal" refers to the metallic coating on aluminum base metal.

PART 3 EXECUTION

3.1 INSPECTION

Examine openings to receive louvers to assure dimensions conform to shop drawings and that openings are free of irregularities which would interfere with installation.

Report unsatisfactory conditions to Architect in writing.

Do not proceed with installation until unsatisfactory conditions have been corrected.

3.2 INSTALLATION

Install louvers in accordance with shop drawings and manufacturer's recommended installation instructions.

3.3 ADJUST AND CLEAN

After installation, ensure that units are level and securely anchored.

Verify that screens are installed.

Repair damage to louver finish to match original or replace.

-- End of Section --

SECTION 10430

EXTERIOR SIGNAGE

PART 1 GENERAL

1.1 REFERENCES

The publications listed below form a part of this specification to the extent referenced. The publications are referred to in the text by basic designation only.

AMERICAN SOCIETY FOR TESTING AND MATERIALS (ASTM)

ASTM A 123/A 123M	(1997a) Zinc (Hot-Dip Galvanized) Coatings on Iron and Steel Products
ASTM A 653/A 653M	(1997) Steel Sheet, Zinc-Coated (Galvanized) or Zinc-Iron Alloy-Coated (Galvannealed) by the Hot-Dip Process
ASTM A 924/A 924M	(1997) General Requirements for Steel Sheet, Metallic-Coated by the Hot-Dip Process
ASTM B 209	(1995) Aluminum and Aluminum-Alloy Sheet and Plate (Metric)
ASTM B 221	(1996) Aluminum and Aluminum-Alloy Extruded Bars, Rods, Wire, Profiles, and Tubes (Metric)

AMERICAN WELDING SOCIETY (AWS)

AWS D1.1	(1996) Structural Welding Code - Stee

1.2 GENERAL

All exterior signage shall be provided by a single manufacturer. Exterior signage shall be of the design, detail, sizes, types, and message content shown on the drawings, and as scheduled in Section 10445, SIGNAGE SCHEDULE, and shall conform to the requirements specified, and shall be provided at the locations indicated. Signs shall be complete with lettering, framing as detailed, and related components for a complete installation.

1.3 WIND LOAD REQUIREMENTS

Exterior signage shall be designed to withstand 90 mph windload.

1.4 CHARACTER PROPORTIONS AND HEIGHTS

Letters and numbers on indicated signs for handicapped-accessible buildings shall have a width-to-height ratio between 3:5 and 1:1 and a stroke-width-to-height ratio between 1:5 and 1:10. Characters and numbers on indicated signs shall be sized according to the viewing distance from which they are to be read. The minimum height is measured using an upper case letter "X". Lower case characters are permitted.

1.5 SUBMITTALS

Government approval is required for submittals with a "GA" designation; submittals having an "FIO" designation are for information only. The following shall be submitted in accordance with Section 01330 SUBMITTAL PROCEDURES:

SD-01 Data

Exterior Signs; GA.

Manufacturer's descriptive data and catalog cuts.

SD-04 Drawings

Exterior Signs; GA.

Drawings showing elevations of each type of sign; dimensions, details, and methods of mounting or anchoring; shape and thickness of materials; and details of construction. A schedule showing the location, each sign type, and message shall be included.

SD-06 Instructions

Exterior Signs; FIO.

Manufacturer's installation instructions and cleaning instructions.

SD-07 Schedules

Exterior Signs; GA.

Exterior signage schedule in electronic media with spread sheet format. Spread sheet shall include sign location, sign type, and message.

SD-14 Samples

Exterior Signs, Initial Selection Samples; GA, Exterior Signs, Verification Samples; GA.

Initial Selection Samples: Submit samples showing complete range of colors, textures, and finishes available for each material used.

Verification Samples: Submit representative samples of each material that is to be exposed in the completed work, as enumerated below. Show full color ranges and finish variations expected. Samples will be retained by

the Contracting Officer throughout duration of project.

1. Vinyl samples, in specified type style, size and graphic, for each color and finish designated on Drawings.

2. Paint color and finish sample on 6" x 6" 1/8 in. thick aluminum, for each color and finish required.

3. Full size representative plotted templates for designated lettering, for each style, size, color, and finish designated on the Drawings. Include character and word spacing.

4. Plotted template or camera-ready artwork for making symbols specified.

SD-18 Records

Exterior Signs; GA.

Design analysis and supporting calculations performed in support of specified signage.

SD-19 Operation and Maintenance Manuals

Exterior Signs; FIO.

Six copies of maintenance instructions listing routine maintenance procedures, possible breakdowns and repairs, and troubleshooting guides. The instructions shall include simplified diagrams for the equipment as installed.

1.6 QUALITY ASSURANCE

Source: For each material type required for the work of this Section, provide primary materials that are the product of one manufacturer. Provide secondary or accessory materials that are acceptable to the manufacturers of primary materials.

Installer: A firm with a minimum of three years experience in type of work required by this Section and that is acceptable to manufacturers of primary materials.

All work and material shall be in accordance with all applicable codes and standards and shall be acceptable to all authorities having jurisdiction.

1. ADA Compliant: All signage shall be fabricated and installed to comply with USATBCB ADA requirements.

Design Criteria: The Drawings indicate size, profiles, and dimensional requirements of signs and graphics. Signs by other manufacturers may be considered provided the deviations in dimensions and profiles are minor and do not, in the opinion of the Contracting Officer, change the design concept.

1. Fonts: Type fonts supplied by manufacturer must match specified fonts exactly. Conversions, translations, or "close matches" are not acceptable. Manufacturer must purchase original font software from font suppliers.

2. Computer Generated Graphics: USMA shall provide Camera Ready Artwork for Shield Logo only. Manufacturer is responsible for all layout of text and graphics as indicated in the drawings.

Sign Mock-ups: Prior to commencing primary work of this Section, provide one full-size sign mockup for each sign type listed below, at locations acceptable to Contracting Officer:

1. Sign Type EXT-1

2. Obtain Contracting Officer's acceptance of visual qualities of the work of this Section.

3. Protect and maintain accepted mockups throughout remainder of work of this Section to serve as criteria for acceptance of work.

4. Approved mockups may be incorporated into finished work.

1.7 DELIVERY AND STORAGE

Materials shall be wrapped for shipment and storage, delivered to the jobsite in manufacturer's original packaging, and stored in a clean, dry area in accordance with manufacturer's instructions.

1.8 WARRANTY

Manufacturer's standard performance guarantees or warranties that extend beyond a one year period shall be provided.

PART 2 PRODUCTS

2.1 GENERAL

Sign and graphic components are to be by a single manufacturer, including necessary mounting options, fittings and fastenings.

2.2 SIGN STANDARDS

2.2.1 Typography:

1. Type style: as indicated and approved by Contracting Officer. Copy shall be a true, clean, accurate reproduction of typeface(s) specified. Upper and lower case or all caps as indicated in Sign Message Schedule. Letter spacing to be normal and interline spacing shall be set by manufacturer.

2. Arrows, symbols and logo art: To be provided in style, sizes, colors and spacing as shown in drawings.

2.2.2 Project Colors and Finishes:

1. Typography: Where color and type-style selection is required, provide as indicated and approved by Contracting Officer.

2. Sign Insert Background: Where color and finish selection is required, provide color and finish as indicated and approved by Contracting Officer.

3. End Cap/Frame: Where color and finish selection is required, provide color and finish as indicated and approved by Contracting Officer.

4. Accents: Where color and finish selection is required, provide color and finish as indicated and approved by Contracting Officer.

2.2.3 Project Finishes:

1. Finishes are to meet current Federal ADA and any State requirements.

2. Where applied finish selection is required, provide finish as indicated and approved by Contracting Officer.

2.3 SIGNS

2.3.1 General:

Provide products produced by System 2/90, 5510 33rd St. S. E., Grand Rapids, MI 49512, (800) 777-4310, Fax (616) 949-5959 or approved equal.

2.3.2 Interchangeable Component Sign System:

2.3.2.1 Interchangeable Component Sign System-General:

The System 2/90 Interchangeable Component Sign System shall be comprised of three primary components; Structural Rail, Copy Insert(s) and Interlocking End Caps or Frame.

1. Interior sign system is capable of being arranged in a variety of configurations with a minimum of attachments, devices and connectors.

2. Interchangeable nature of the system will allow for changes of graphic components of the installed sign, without changing sign in its entirety.

2.3.2.2 Structural Rail:

Structural Rail utilizes horizontal rails, spaced to allow uniform, modular sizing of signs. It is the internal structural member of the sign in 6063T5 extruded aluminum anodized black.

1. The Structural Rail shall accept an extruded aluminum or plastic

insert on one side or on both sides, depending upon sign style.

2. Structural Rail shall allow for different mounting devices including; wall mounting for screw-on applications, using pressure sensitive tape, freestanding mount, ceiling mount and other mounting devices as needed.

3. The mounting method for all Interchangeable Component Signs shall be concealed mechanical screw on fasteners, unless otherwise noted

4. Structural Rails can be convertible in the field to permit a sign to be enlarged from one size to another, in height or width.

5. Rail Joiners extruded in black PVC plastic. Rail Joiners connect Structural Rails together providing a butt joint along their edges. Rail Joiners are not visible in rail assembly.

6. Accent Strips extruded 6063T5 aluminum also connect Structural Rails together but with a visible horizontal rib, which is seen between the adjacent Copy Inserts.

7. Top/Bottom Trim extruded 6063T5 aluminum provides decorative trim cap, which butts flush to adjacent Copy Insert and encloses top or bottom of Structural Rail and Copy Insert.

2.3.3 Copy Inserts:

Copy Inserts accept various forms of copy and graphics and attach to the Structural Rail with a hook detail.

Copy Inserts are interchangeable by sliding horizontally from either side of sign, and to other signs in system of equal width or height.

Cleanable without use of special chemicals or cleaning solutions.

Copy Insert Materials:

1. ABS Inserts - .090 inch extruded ABS plastic core with .003 UV resistant acrylic cap bonded during extrusion/texturing process. Pressure bonded to extruded PVC hook using high bond, pressure sensitive adhesive. Insert color is either integral or painted in acrylic lacquer. Finished in a Chromium industries #HM335RA texture pattern to prevent glare and disguise fingerprints.

2. Aluminum Inserts--.028 inch coil anodized aluminum precision slit and pressure bonded to extruded 6063T5 aluminum Carrier Insert using adhesive.

3. Window Inserts--Extruded 6063T5 aluminum with integral hooks for connection to Structural Rail. Color is anodized black , acrylic lacquer, or color indicated. USMA logo is silkscreened on window insert where indicated. Inserts hold diecut paper insert with a clear .020 inch textured polycarbonate lens.

2.3.4 Interlocking End Caps or Frame:

End Caps interlock to Structural Rail with steel spring clips to form an integral unit, enclosing and securing the changeable Copy Inserts, without requiring tools for assembly.

Extruded in 6063T5 aluminum or injection molded ABS. Painted with acrylic lacquer in specified color.

Interchangeable to either end of sign and to other signs in the system of equal height.

Locking feature can be added by notching structural rail to accept locking tab in end cap clip.

2.3.5 Graphic Process:

Type and symbols are to be reproduced in the following manner:

1. Vinyl First Surface Copy (non-tactile) - Injection molded or extruded ABS plastic or aluminum insert with first surface applied High Performance Cast PVC Vinyl copy.

2. Integral Tactile Copy Inserts - phenolic photo polymer etched with .033 inch raised copy.

3. Silk-screened First Surface Copy (non-tactile) - Injection molded or extruded ABS plastic or aluminum insert with first surface applied lacquer-based silk-screened copy.

4. Engraved Copy--Extruded ABS insert painted with acrylic lacquer finish. Engraved through one of eight standard ABS materials painted surface exposing desired color for copy.

2.4 SIGN TYPES

2.4.1 General:

The sign system is comprised of sign types families that are identified by letters and numbers which identify a particular group of sign components and sizes. An additional set of numbers identifies a specific style of sign within that family.

2.4.2 Sign Types:

1. DOT-1 DOT
2. EBI-1 Exterior Building Identification
3. EBI-2 Exterior Building Identification
4. EBI-4 Exterior Building Identification
5. EXT-1 Exterior Building Signs
6. EXT-2 Exterior No Entry
7. EXT-3 Loading Dock
8. HD-2 Hours Directory Sign
9. RS-1 Reserved Parking

10. RS-2 Reserved Parking
11. EXT-4 Exterior Information Sign

2.5 ALUMINUM MATERIALS

General: Provide manufacturer's standard extrusions, sections, sheet, and plate, of alloy and temper recommended by aluminum manufacturer or finisher for type, use, and finish indicated, but not less than strength and durability properties specified below:

1. Structural Aluminum Shapes: ASTM B 308, 6061 alloy.
2. Extruded Aluminum Bars, Rods, Shapes, and Tubes: ASTM B 221, 6063 alloy.
3. Aluminum Sheet and Plate: ASTM B 209, alloy 1100, 3003, or 5052.

2.6 STEEL PRODUCTS

General: Provide manufacturer's standard sections, sheet, and plate, as recommended by steel manufacturer or finisher for type, use, and finish indicated, but not less than strength and durability properties specified below:

1. Steel Shapes: ASTM A 36.
2. Steel Tubing: ASTM A 500 or ASTM A 501, hot or cold rolled.
3. Steel Sheet: ASTM A 366, ASTM A 570 or ASTM A 611, of grade required for design loading.
4. Steel Pipe: ASTM A 53, black Schedule 40, unless indicated otherwise. Type and grade as required for design loading.

2.7 VINYL MATERIALS

Applied Vinyl Graphics:

1. Pressure sensitive vinyl graphics shall be Scotchcal, 0.4 mil applied pressure-sensitive vinyl, manufactured by 3M, or approved equal.

2. Reflective vinyl sheeting shall be Scotchlite Series 3200, Engineer grade permanent pressure sensitive adhesive sheeting.

2.8 ANCHORS AND FASTENERS

Exposed anchor and fastener materials shall be compatible with metal to which applied and shall match in color and finish and shall be non-rusting, non-corroding, and non-staining. Exposed fasteners shall be tamper-proof.

2.9 FABRICATION

Design components to allow for expansion and contraction for a minimum material temperature range of 56 degree C (100 degree F), without causing buckling, excessive opening of joints or over stressing of adhesives and fasteners.

Form work to required shapes and sizes, with true curves, lines and angles.

Provide necessary rebates, lugs and brackets for assembly of units.

Contact surfaces of connected members be true. Assembled so joints will be tight and practically unnoticeable, without use of filling compound.

Signs shall have fine, even texture and be flat and sound. Lines and miters sharp, arises unbroken, profiles accurate and ornament true to pattern. Plane surfaces be smooth flat and without oil-canning, free of rack and twist. Maximum variation from plane of surface plus or minus 0.015 inch. Restore texture to filed or cut areas.

Level or straighten wrought work. Members shall have sharp lines and angles and smooth surfaces.

Extruded members to be free from extrusion marks. Square turns and corners sharp, curves true.

Conceal fastenings where possible. Exposed ends and edges mill smooth, with corners slightly rounded.

All painted surfaces properly primed. Finish coating of paint to have complete coverage with no light or thin applications allowing substrate or primer to show. Finished surface smooth, free of scratches, gouges, drips, bubbles, thickness variations, foreign matter and other imperfections.

Movable parts, including hardware, are to be cleaned and adjusted to operate as designed without binding of deformation of members. Doors and covers centered in opening of frame. All contact surfaces fit tight and even without forcing or warping components.

2.10 SHOP FABRICATION AND MANUFACTURE

2.10.1 Factory Workmanship

Work shall be assembled in the shop, as far as practical, ready for installation at the site. Work that cannot be shop assembled shall be given a trial fit in the shop to ensure proper field assembly. Holes for bolts and screws shall be drilled or punched. Drilling and punching shall produce clean, true lines and surfaces. Welding to or on structural steel shall be in accordance with AWS D1.1. Welding shall be continuous along the entire area of contact. Exposed welds shall be ground smooth. Exposed surfaces of work shall have a smooth finish and exposed riveting shall be flush. Fastenings shall be concealed where practical. Items specified to be galvanized shall be by hot-dip process after fabrication if practical. Galvanizing shall be in accordance with ASTM A 123/A 123M and ASTM A 653/A 653M, as applicable. Other metallic coatings of steel sheet shall be in accordance with ASTM A 924/A 924M. Joints exposed to the weather shall be formed to exclude water. Drainage and weep holes shall be included as required to prevent condensation buildup.

2.10.2 Dissimilar Materials

Where dissimilar metals are in contact, or where aluminum is in contact with concrete, mortar, masonry, wet or pressure-treated wood, or absorptive

materials subject to wetting, the surfaces shall be protected with a coat of asphalt varnish or a coat of zinc-molybdate primer to prevent galvanic or corrosive action.

2.10.3 Shop Painting

2.10.3.1 Sign Paints and Coatings:

Paints shall be Mathews acrylic polyurethane paints, or equal from Tnemec, Ameron, or Valspar. Paints shall be an ultra-violet inhibited aliphatic isocyanurate/acrylic system, engineered for extreme color and gloss retention. Colors as scheduled, eggshell finish. Use paints and coatings, including paints for copy and background colors as recommended by the paint manufacturer for optimum adherence to acrylic surfaces, and that are non-fading for the intended application.

2.10.3.2 Paint Performance Characteristics:

1. Set Time: 15 minutes.
2. Tack Free Time: 1 to 2 hours.
3. Taping Time at 50% rel. humidity @ 77 deg. F.: 16 - 18 hours (w/o accelerator).
4. 2 toning @ 77 deg. F., 50% rel. humidity (with accelerator): 4 hrs.
5. Pot Life at 77 deg. F.: 8 hrs.
6. Hardness, KHM: 2H.
7. Gloss 20: 85 plus.
8. Gloss 60: 90 plus.
9. Flexibility-1/8 in. mandrel: No cracks.
10. Impact Resistance-Direct-1 week: 165 ins./lbs.

2.10.3.3 Paint Chemical Resistance Properties

1. Solvent Resistance: Excellent.
2. Acid Resistance: Excellent.
3. Alkalius Resistance: Excellent
4. Salt Spray 2000 Hours: No effect.
5. Gloss Retention - 1600 hrs. at 20 deg. F.: 88%.
6. Gloss Retention - 1600 hrs. at 60 deg. F.: 97%.
7. Abrasive Resistance: 1000 revolutions CS-10 wheel 0.248 grams.

2.10.3.4 Silkscreen Inks

Silkscreen inks shall be compatible with the finishes it will be applied to. Inks shall be manufactured by Naz Dar Company, Chicago Il., or approved equal. Colors as indicated. Top coat screened sign panels with Cardinal clear polyurethane coating 6470 Series catalyzed with 340 HP, exterior grade, semi gloss paint system with ultraviolet inhibitors. Follow coating system manufacturer's instructions and recommendations for surface preparation, mil thickness, curing and other requirements.

2.11 COLOR, FINISH, AND CONTRAST

Color of products shall be as indicated. For buildings required to be handicapped-accessible, the characters and background of signs shall be

eggshell, matte, or other non-glare finish. Characters and symbols shall contrast with their background - either light characters on a dark background or dark characters on a light background.

PART 3 EXECUTION

3.1 INSTALLATION

Signs, plaques, or dimensional letters shall be installed in accordance with approved manufacturer's instructions at locations shown on the drawings. Signs shall be installed plumb and true at mounting heights indicated, and by method shown or specified. Signs mounted on other surfaces shall not be installed until finishes on such surfaces have been completed.

3.1.1 Anchorage

Fastening to In-Place Construction: Provide anchorage devices and fasteners necessary for securing work of this Section to in-place construction. Include threaded fasteners for concrete and masonry inserts, toggle bolts, through bolts, lag bolts, wood screws, and other connectors required.

Anchorage and fastener materials shall be in accordance with approved manufacturer's instructions for the indicated substrate. Anchorage not otherwise specified or indicated shall include slotted inserts, expansion shields, and powder-driven fasteners when approved for concrete; toggle bolts and through bolts for masonry; machine carriage bolts for steel; lag bolts and screws for wood.

3.1.2 Tolerances

The following allowable installed tolerances are allowable variations from locations and dimensions indicated by the Contract Documents. Do not add these tolerances to any allowable tolerances indicated for other work.

1. Allowable Variation from True Plumb: + 1/8 in. in 20 ft. - 0 in.
2. Allowable Variation from True Line: + 1/8 in. in 20 ft. - 0 in.
3. Allowable Variation from True Level: + 1/16 in. in 20 ft. - 0 in.

3.1.3 Protection and Cleaning

The work shall be protected against damage during construction. Hardware and electrical equipment shall be adjusted for proper operation. Glass, frames, and other sign surfaces shall be cleaned in accordance with manufacturer's instructions. After signs are completed and inspected, the Contractor shall cover all project identification, directional, and other signs which may mislead the public. Covering shall be maintained until instructed to be removed by the Contracting Officer or until the facility is to be opened for business. Signs shall be cleaned, as required, at time of cover removal.

-- End of Section --

SECTION 10440

INTERIOR SIGNAGE

PART 1 GENERAL

1.1 REFERENCES

The publications listed below form a part of this specification to the extent referenced. The publications are referred to in the text by basic designation only.

AMERICAN SOCIETY FOR TESTING AND MATERIALS (ASTM)

ASTM B 209	(1995) Aluminum and Aluminum-Alloy Sheet and Plate (Metric)
ASTM B 221	(1996) Aluminum and Aluminum-Alloy Extruded Bars, Rods, Wire, Profiles, and Tubes (Metric

1.2 GENERAL

Interior signage shall be of the design, detail, sizes, types, and message content shown on the drawings and as scheduled in Section 10445, SIGNAGE SCHEDULE, and shall conform to the requirements specified, and shall be provided at the locations indicated. Signs shall be complete with lettering, framing as detailed, and related components for a complete installation.

1.2.1 Character Proportions and Heights

Letters and numbers on indicated signs in handicapped-accessible buildings, which do not designate permanent rooms or spaces, shall have a width-to-height ratio between 3:5 and 1:1 and a stroke-width-to-height ratio between 1:5 and 1:10. Characters and numbers on indicated signs shall be sized according to the viewing distance from which they are to be read. The minimum height is measured using an upper case letter "X". Lower case characters are permitted. Suspended or projected overhead signs shall have a minimum character height of 3 inches.

1.2.2 Raised and Brailled Characters and Pictorial Symbol Signs (Pictograms)

Letters and numbers on indicated signs which designate permanent rooms and spaces in handicapped-accessible buildings shall be raised 1/32 inch upper case, sans serif or simple serif type and shall be accompanied with Grade 2 Braille. Raised characters shall be at least 5/8 inch in height, but no higher than 2 inches. Pictograms shall be accompanied by the equivalent verbal description placed directly below the pictogram. The border dimension of the pictogram shall be 6 inches minimum in height. Indicated

accessible facilities shall use the international symbol of accessibility.

1.3 SUBMITTALS

Government approval is required for submittals with a "GA" designation; submittals having an "FIO" designation are for information only. The following shall be submitted in accordance with Section 01330 SUBMITTAL PROCEDURES:

SD-01 Data

Interior Signage; GA.

Manufacturer's descriptive data, catalogs cuts, installation and cleaning instructions.

SD-04 Drawings

Interior Signage; GA.

Drawings showing elevations of each type of sign, dimensions, details and methods of mounting or anchoring, shape and thickness of materials, and details of construction. A schedule showing the location, each sign type, and message shall be included.

SD-14 Samples

Interior Signage, Initial Selection Samples; GA, Interior Signage, Verification Samples; GA.

Initial Selection Samples: Submit samples showing complete range of colors, textures, and finishes available for each material used.

Verification Samples: Submit representative samples of each material that is to be exposed in the completed work, as enumerated below. Show full color ranges and finish variations expected. Samples will be retained by the Contracting Officer throughout duration of project.

1. Vinyl samples, in specified type style, size and graphic, for each color and finish designated on Drawings.

2. Paint color and finish sample on 6" x 6" 1/8 in. thick aluminum, for each color and finish required.

3. Full size representative plotted templates for designated lettering, for each style, size, color, and finish designated on the Drawings. Include character and word spacing.

4. Full size plotted template of all symbols and logos.

SD-19 Operation and Maintenance Manuals

Interior Signage; GA.

Six copies of operating instructions outlining the step-by-step procedures required for system operation shall be provided. The instructions shall include simplified diagrams for the system as installed. Six copies of maintenance instructions listing routine procedures, repairs, and guides shall be provided. The instructions shall include the manufacturer's name, model number, service manual, parts list, and brief description of all equipment and their basic operating features. Each set shall be permanently bound and shall have a hard cover. The following identification shall be inscribed on the covers: the words "OPERATING AND MAINTENANCE INSTRUCTIONS", name and location of the facility, name of the Contractor, and contract number.

1.4 QUALITY ASSURANCE

Source: For each material type required for the work of this Section, provide primary materials which are the product of one manufacturer. Provide secondary or accessory materials which are acceptable to the manufacturers of primary materials.

Installer: A firm with a minimum of three years experience in type of work required by this Section and which is acceptable to manufacturers of primary materials.

All work and material shall be in accordance with all applicable codes and standards and shall be acceptable to all authorities having jurisdiction.

1. ADA Compliant: All signage shall be fabricated and installed to comply with USATBCB ADA requirements.

Design Criteria: The Drawings indicate size, profiles, and dimensional requirements of signs and graphics. Signs by other manufacturers may be considered provided the deviations in dimensions and profiles are minor and do not, in the opinion of the Contracting Officer, change the design concept.

1. Fonts: Type fonts supplied by manufacturer must match specified fonts exactly. Conversions, translations, or "close matches" are not acceptable. Manufacturer must purchase original font software from font suppliers.

2. Computer Generated Graphics: USMA shall provide Camera Ready Artwork for Shield Logo only. Manufacturer is responsible for all layout of text and graphics as indicated in the drawings.

3. Evacuation Plan Graphics: Contracting Officer shall provide digital base plan line art only for each floor of the building. Manufacturer is responsible for all layout of graphic symbols and text as indicated in the drawings. Symbols and plan orientation shall change according to the location of the plan.

Sign Mock-ups: Prior to commencing primary work of this Section, provide one full-size sign mockup for each sign type listed below, at locations acceptable to Contracting Officer:

1. Sign Type PRW-1.
2. Sign Type SD-1.
3. Sign Type ASW-1.
4. Sign Type ASF-1.
5. Sign Type PPD-2.

Approved mockups may be incorporated into finished work.

1.5 DELIVERY AND STORAGE

Materials shall be delivered to the jobsite in manufacturer's original packaging and stored in a clean, dry area in accordance with manufacturer's instructions.

1.6 WARRANTY

Manufacturer's standard performance guarantees or warranties that extend beyond a one year period shall be provided.

1.7 EXTRA STOCK

The Manufacturer shall provide extra stock of the following:

1. (25) extra clear .02 inch textured polycarbonate lens to fit sign type PRW-1.

2. (5,000) sheets of 8.5 in. x 11 in. FOX RIVER, Gainsborough, Pewter 80 lb. Text, which is pre-perforated to fit window insert of sign type PRW-1.

PART 2 PRODUCTS

2.1 GENERAL

Sign and graphic components are to be by a single manufacturer, including necessary mounting options, fittings and fastenings. All signs shall be waterproof.

2.2 SIGN STANDARDS

2.2.1 Typography:

Type style: as indicated and approved by Contracting Officer. Copy shall be a true, clean, accurate reproduction of typeface(s) specified. Upper and lower case or all caps as indicated in Sign Message Schedule. Letter spacing to be normal and interline spacing shall be set by manufacturer.

Arrows, symbols and logo art: To be provided in style, sizes, colors and spacing as shown in drawings.

Braille: Grade 2.

Translations: Grade 2 Braille copy and any second language text, as noted in Sign Message Schedule, is responsibility of the sign manufacturer.

2.2.2 Project Colors and Finishes:

2.2.2.1 Typography:

Where color and type-style selection is required, provide as indicated and approved by Contracting Officer.

2.2.2.2 Sign Insert Background:

Where color and finish selection is required, provide color and finish as indicated and approved by Contracting Officer.

2.2.2.3 End Cap/Frame:

Where color and finish selection is required, provide color and finish as indicated and approved by Contracting Officer.

2.2.2.3 Accents:

Where color and finish selection is required, provide color and finish as indicated and approved by Contracting Officer.

2.2.3 Project Finishes:

Finishes are to meet current Federal ADA and any State requirements.

Where applied finish selection is required, provide finish as indicated and approved by Contracting Officer.

2.2.4 Window Insert Paper

Manufacturer shall provide paper inserts for all window insert signs. Paper shall be FOX RIVER, Gainsborough, Pewter 80 lb. Text (supplied by Century Robinson 800.727.3789).

Paper to be supplied in 8.5 in. x 11 in. format with a pre-perforated edge to fit specified window insert. Paper must be able to print from a standard laser printer. The perforated edge must tear evenly and fit exactly within the window insert without trimming.

2.3 SIGNS

2.3.1 General:

Provide products produced by System 2/90, 5510 33rd St. S. E., Grand Rapids, MI 49512, (800) 777-4310, Fax (616) 949-5959 or approved equal.

2.3.2 Interchangeable Component Sign System:

2.3.2.1 System 2/90 Interchangeable Component Sign System:

The System 2/90 Interchangeable Component Sign System shall be comprised of three primary components; Structural Rail, Copy Insert(s) and Interlocking

End Caps or Frame.

1. Interior sign system is capable of being arranged in a variety of configurations with a minimum of attachments, devices and connectors

2. Interchangeable nature of the system will allow for changes of graphic components of the installed sign, without changing sign in its entirety.

2.3.2.2 Structural Rail.

Structural Rail utilizes horizontal rails, spaced to allow uniform, modular sizing of signs. It is the internal structural member of the sign in 6063T5 extruded aluminum anodized black.

The Structural Rail shall accept an extruded aluminum or plastic insert on one side or on both sides, depending upon sign style.

Structural Rail shall allow for different mounting devices including; wall mounting for screw-on applications, using pressure sensitive tape, freestanding mount, ceiling mount and other mounting devices as needed.

The mounting method for all Interchangeable Component Signs shall be concealed mechanical screw on fasteners, unless otherwise noted.

Structural Rails can be convertible in the field to permit a sign to be enlarged from one size to another, in height or width.

1. Rail Joiners extruded in black PVC plastic. Rail Joiners connect Structural Rails together providing a butt joint along their edges. Rail Joiners are not visible in rail assembly.

2. Accent Strips extruded 6063T5 aluminum also connect Structural Rails together but with a visible horizontal rib, which is seen between the adjacent Copy Inserts.

3. Top/Bottom Trim extruded 6063T5 aluminum provides decorative trim cap, which butts flush to adjacent Copy Insert and encloses top or bottom of Structural Rail and Copy Insert.

2.3.3 Copy Inserts:

Copy Inserts accept various forms of copy and graphics and attach to the Structural Rail with a hook detail

Copy Inserts are interchangeable by sliding horizontally from either side of sign, and to other signs in system of equal width or height.

Cleanable without use of special chemicals or cleaning solutions.

Copy Insert Materials:

1. ABS Inserts - .090 inch extruded ABS plastic core with .003 UV

resistant acrylic cap bonded during extrusion/texturing process. Pressure bonded to extruded PVC hook using high bond, pressure sensitive adhesive. Insert color is either integral or painted in acrylic lacquer. Finished in a Chromium industries #HM335RA texture pattern to prevent glare and disguise fingerprints.

2. Aluminum Inserts--.028 inch coil anodized aluminum precision slit and pressure bonded to extruded 6063T5 aluminum Carrier Insert using adhesive.

3. Window Inserts--Extruded 6063T5 aluminum with integral hooks for connection to Structural Rail. Color is anodized black , acrylic lacquer, or color indicated. USMA logo is silkscreened on window insert where indicated. Inserts hold diecut paper insert with a clear .020 inch textured polycarbonate lens.

4. ADA , Tactile Insert--Tactile sign to provide for letters, numbers and Braille to be integral with sign plaque material.

   a. Tactile Photo-polymer inserts are .080 inch phenolic photo polymer with raised copy etched to .031 inch, pressure bonded to extruded PVC hooks with adhesive. Background color is painted in acrylic lacquer in the specified color. Top surface of copy characters is then added using flood coat screening or roller printing. Both processes use silk-screen inks.

   b. Numbers, letters and Braille to be raised .031 inch from the background surface. The draft of the letters, numbers and Braille to be sharp and clean.

   c. Braille dots are to conform with standard dimensions for literary Braille: Dot diameter: .059 inches; Inter-dot spacing: .090 inches; Horizontal separation between cells: .241 inches; Vertical separation between cells: .395 inches.

2.3.4 Interlocking End Caps or Frame:

End Caps interlock to Structural Rail with steel spring clips to form an integral unit, enclosing and securing the changeable Copy Inserts, without requiring tools for assembly.

Extruded in 6063T5 aluminum or injection molded ABS. Painted with acrylic lacquer in specified color.

Interchangeable to either end of sign and to other signs in the system of equal height.

Locking feature can be added by notching structural rail to accept locking tab in end cap clip.

2.3.5 Graphic Process:

Type and symbols are to be reproduced in the following manner:

1. Vinyl First Surface Copy (non-tactile) - Injection molded or extruded ABS plastic or aluminum insert with first surface applied High Performance Cast PVC Vinyl copy.

2. Integral Tactile Copy Inserts - phenolic photo polymer etched with .033 inch raised copy.

3. Silk-screened First Surface Copy (non-tactile) - Injection molded or extruded ABS plastic or aluminum insert with first surface applied lacquer-based silk-screened copy.

4. Engraved Copy--Extruded ABS insert painted with acrylic lacquer finish. Engraved through one of eight standard ABS materials painted surface exposing desired color for copy.

2.4 SIGN TYPES

2.4.1 General:

The sign system is comprised of sign types families that are identified by letters and numbers which identify a particular group of sign components and sizes. An additional set of numbers identifies a specific style of sign within that family.

2.4.2 Sign Types:

ASF-1 Major Activity Space Identification Flag Mounted
ASW-1 Minor Activity Space Identification
ASW-2 Minor Activity Space Identification Glass (Admin)
BB-1 Bulletin Board
DIR-1 Building Directory Sign
DTD-1 Directorate Directory Identification Sign
EDS-1 Exit Direction at Stair Sign
EP-1 Emergency Exit Plan Sign
FD-1 Floor Directory Sign
FEM-1 Fire Emergency Signs
FEM-2 Fire Emergency Signs
FEX-1 Fire Extinguisher Sign
IO-1 Individual Office Identification Sign
NENT-1 Circulation Control
NOS-1 No Smoking Sign
NS-1 Notice Sign
PPD-1 Primary Pedestrian Directional (Suspended)
PPD-2 Primary Pedestrian Directional (Flag Mounted)
PR-1 Permanent Room Identification Sign
PRW-1 Permanent Room Identification Sign w/ Window Insert
RID-1 Room Identification Sign
SD-1 Secondary Pedestrian Directional
SF-1 Stair/Floor Identification Sign
TF-1 Toilet Facility Identification Sign
UL-1 Upper Level Office Identification
VG-1 Vinyl Graphics
TE-1 Temporary Events

2.5 ALUMINUM ALLOY PRODUCTS

General: Provide manufacturer's standard extrusions, sections, sheet, and plate, of alloy and temper recommended by aluminum manufacturer or finisher for type, use, and finish indicated, but not less than strength and durability properties specified below:

1. Structural Aluminum Shapes: ASTM B 308, 6061 alloy.
2. Extruded Aluminum Bars, Rods, Shapes, and Tubes: ASTM B 221, 6063 alloy.
3. Aluminum Sheet and Plate: ASTM B 209, alloy 1100, 3003, or 5052.

2.6 STEEL MATERIALS

Steel Shapes: ASTM A 36.

Steel Tubing: ASTM A 500 or ASTM A 501, hot or cold rolled.

Steel Sheet: ASTM A 366, ASTM A 570 or ASTM A 611, of grade required for design loading.

Steel Pipe: ASTM A 53, black Schedule 40, unless indicated otherwise. Type and grade as required for design loading.

2.7 VINYL MATERIALS

Applied Vinyl Graphics:

1. Pressure sensitive vinyl graphics shall be Scotchcal, 0.4 mil applied pressure-sensitive vinyl, manufactured by 3M, or approved equal.

2. Reflective vinyl sheeting shall be Scotchlite Series 3200, Engineer grade permanent pressure sensitive adhesive sheeting.

2.8 ANCHORS AND FASTENERS

Exposed anchor and fastener materials shall be compatible with metal to which applied and shall match in color and finish and shall be non-rusting, non-corroding, and non-staining. Exposed fasteners shall be tamper-proof.

2.9 FABRICATION

Design components to allow for expansion and contraction for a minimum material temperature range of 56 degree C (100 degree F), without causing buckling, excessive opening of joints or over stressing of adhesives and fasteners.

Form work to required shapes and sizes, with true curves, lines and angles. Provide necessary rebates, lugs and brackets for assembly of units.

Contact surfaces of connected members be true. Assembled so joints will be tight and practically unnoticeable, without use of filling compound.

Signs shall have fine, even texture and be flat and sound. Lines and miters sharp, arises unbroken, profiles accurate and ornament true to pattern. Plane surfaces be smooth flat and without oil-canning, free of rack and twist.
Maximum variation from plane of surface plus or minus 0.015 inch. Restore texture to filed or cut areas.

Level or straighten wrought work. Members shall have sharp lines and angles and smooth surfaces.

Extruded members to be free from extrusion marks. Square turns and corners sharp, curves true.

Conceal fastenings where possible. Exposed ends and edges mill smooth, with corners slightly rounded.

All painted surfaces properly primed. Finish coating of paint to have complete coverage with no light or thin applications allowing substrate or primer to show. Finished surface smooth, free of scratches, gouges, drips, bubbles, thickness variations, foreign matter and other imperfections.

Movable parts, including hardware, are to be cleaned and adjusted to operate as designed without binding of deformation of members. Doors and covers centered in opening of frame. All contact surfaces fit tight and even without forcing or warping components.

2.10 FABRICATION AND MANUFACTURE

2.10.1 Factory Workmanship

Holes for bolts and screws shall be drilled or punched. Drilling and punching shall produce clean, true lines and surfaces. Exposed surfaces of work shall have a smooth finish and exposed riveting shall be flush. Fastenings shall be concealed where practicable.

2.10.2 Dissimilar Materials

Where dissimilar metals are in contact, the surfaces will be protected to prevent galvanic or corrosive action.

2.11 COLOR, FINISH, AND CONTRAST

2.11.1 Paints

2.11.1.1 Sign Paints and Coatings:

Paints shall be Mathews acrylic polyurethane paints, or equal from Tnemec, Ameron, or Valspar. Paints shall be an ultra-violet inhibited aliphatic isocyanurate/acrylic system, engineered for extreme color and gloss retention. Colors and finish as scheduled. Use paints and coatings, including paints for copy and background colors as recommended by the paint manufacturer for optimum adherence to acrylic surfaces, and that are non-fading for the intended application.

2.11.1.2 Paint Performance Characteristics:

1. Set Time: 15 minutes.
2. Tack Free Time: 1 to 2 hours.
3. Taping Time at 50% rel. humidity @ 77 deg. F.: 16 - 18 hours (w/o accelerator)
4. 2 toning @ 77 deg. F., 50% rel. humidity (with accelerator): 4 hrs.
5. Pot Life at 77 deg. F.: 8 hrs.
7. Hardness, KHM: 2H.
8. Gloss 20: 85 plus.
9. Gloss 60: 90 plus.
10. Flexibility-1/8 in. mandrel: No cracks.
11. Impact Resistance-Direct-1 week: 165 ins./lbs.

2.11.1.3 Paint Chemical Resistance Properties

1. Solvent Resistance: Excellent.
2. Acid Resistance: Excellent.
3. Alkalius Resistance: Excellent
4. Salt Spray 2000 Hours: No effect.
5. Gloss Retention - 1600 hrs. at 20 deg. F.: 88%.
6. Gloss Retention - 1600 hrs. at 60 deg. F.: 97%.
7. Abrasive Resistance: 1000 revolutions CS-10 wheel 0.248 grams.

2.11.1.4 Silkscreen Inks

Silkscreen Inks shall be compatible with the finishes it will be applied to. Inks shall be manufactured by Naz Dar Company, Chicago Il., or approved equal. Colors as indicated. Top coat screened sign panels with Cardinal clear polyurethane coating 6470 Series catalyzed with 340 HP, exterior grade, semi gloss paint system with ultraviolet inhibitors. Follow coating system manufacturer's instructions and recommendations for surface preparation, mil thickness, curing and other requirements.

2.11.2 Colors and Contrast:

Color shall be as indicated. In buildings required to be handicapped-accessible, the characters and background of signs shall be eggshell, matte, or other non-glare finish. Characters and symbols shall contrast with their background - either light characters on a dark background or dark characters on a light background.

PART 3 EXECUTION

3.1 INSTALLATION

Signs shall be installed in accordance with approved manufacturer's instructions at locations shown on the drawings. Signs shall be installed plumb and true at mounting heights indicated, and by method shown or specified. Required blocking shall be installed as detailed. Signs which designate permanent rooms and spaces in handicapped-accessible buildings shall be installed on the wall adjacent to the latch side of the door. Where there is no wall space to the latch side of the door, including at double leaf doors, signs shall be placed on the nearest adjacent wall.

Mounting location for such signage shall be so that a person may approach within 3 inches of signage without encountering protruding objects or standing within the swing of a door. Signs on doors or other surfaces shall not be installed until finishes on such surfaces have been installed. Signs installed on glass surfaces shall be installed with matching blank back-up plates in accordance with manufacturer's instructions.

3.1.1 Anchorage

Fastening to In-Place Construction: Provide anchorage devices and fasteners necessary for securing work of this Section to in-place construction. Include threaded fasteners for concrete and masonry inserts, toggle bolts, through bolts, lag bolts, wood screws, and other connectors required.

Anchorage shall be in accordance with approved manufacturer's instructions. Anchorage not otherwise specified or shown shall include slotted inserts, expansion shields, and powder-driven fasteners when approved for concrete; toggle bolts and through bolts for masonry; machine carriage bolts for steel; lag bolts and screws for wood. Exposed anchor and fastener materials shall be compatible with metal to which applied and shall have matching color and finish.

3.1.2 TOLERANCES

The following allowable installed tolerances are allowable variations from locations and dimensions indicated by the Contract Documents. Do not add these tolerances to any allowable tolerances indicated for other work.

1. Allowable Variation from True Plumb: + 1/8 in. in 20 ft. - 0 in.
2. Allowable Variation from True Line: + 1/8 in. in 20 ft. - 0 in.
3. Allowable Variation from True Level: + 1/16 in. in 20 ft. - 0 in.

3.1.3 Protection and Cleaning

The work shall be protected against damage during construction. Hardware and electrical equipment shall be adjusted for proper operation. Glass, frames, and other sign surfaces shall be cleaned in accordance with the manufacturer's approved instructions.

-- End of Section --

SIGNAGE SCHEDULE SUMMARY

Type	Description	Sheet #	Remarks	Est. Q
Exterior				
. **EBI-1**	Exterior Building Identification	GR2.1	Custom	1
. **EBI-2**	Exterior Building Identification	GR2.1	Custom	1
. **EBI-3**	Exterior Building Identification	GR2.1	Custom	1
. **EXT-1**	Exterior Building Signs	GR2.0	Unicor / System 2/90	3
. **EXT-2**	Exterior No Entry	GR2.0	Unicor / System 2/90	5
. **EXT-3**	Loading Dock	GR2.0	Unicor / System 2/90	1
. **HD-2**	Hours Directory Sign	GR2.0	Unicor / System 2/90	2
. **RS-1**	Reserved Parking	GR2.0	Custom	10
Interior				
. **ASW-2**	Special Activity Space Identificat	GR3.3	Custom	2
. **DIR-1**	Building Directory Sign	GR3.2	Unicor / System 2/90	2
. **DTD-1**	Directorate Directory Identificati	GR3.1	Unicor / System 2/90	2
. **EDS-1**	Exit Direction at Stair Sign	GR3.0	Unicor / System 2/90	28
. **FD-1**	Floor Directory Sign	GR3.2	Unicor / System 2/90	1
. **FEM-1**	Fire Emergency Signs	GR3.1	Unicor / System 2/90	9
. **FEM-2**	Fire Emergency Signs	GR3.1	Unicor / System 2/90	2
. **IO-1**	Individual Office Identification S	GR3.0	Unicor / System 2/90	46
. **NENT-1**	Circulation Control	GR3.1	Unicor / System 2/90	3
. **NOS-1**	No Smoking Sign	GR3.1	Unicor / System 2/90	3
. **NS-1**	Notice Sign	GR3.1	Unicor / System 2/90	29
. **PPD-1**	Primary Pedestrian Directional	GR3.2	Custom	3
. **PPD-2**	Primary Pedestrian Directional (si panel)	GR3.3	Custom	5
. **PR-1**	Permanent Room Identification Sign	GR3.0	Unicor / System 2/90	18
. **PRW-1**	Permanent Room Identification Sign Window Insert	GR3.0	Unicor / System 2/90	57
. **RID-1**	Room Identification Sign	GR3.0	Unicor / System 2/90	155
. **SD-1**	Secondary Pedestrian Directional	GR3.2	Unicor / System 2/90	4
. **SF-1**	Stair/Floor Identification Sign	GR3.0	Unicor / System 2/90	28
. **TF-1**	Toilet Facility Identification Sig	GR3.0	Unicor / System 2/90	27
. **UL-1**	Upper Level Office Identification	GR3.0	Unicor / System 2/90	2
. **VG-1**	Vinyl Graphics	GR3.3	Custom	6

SHEET # GR1-0

Sign	Re	Floo	Sign Ty	Size W	Sheet #	←	Message	Remarks	Date Insta
0001		B	RID-1	8.5" X 3"	GR1-0		C012 JANITOR		
0002		B	RID-1	8.5" X 3"	GR1-0		C014 KITCHEN		
0003		B	IO-1	8.5" x 5"	GR1-0		C013 1 Room Name Inser 2 Name Inserts	USMA to provide names of personnel and room name	
0004		B	PR-1	8.5" X 6"	GR1-0		C010 DPE EQUIP		
0005		B	EDS-1	12" x 12"	GR1-0		LEVEL B STAIR 6 LEVEL S B-4 NO ROOF ACCESS ↑ EXIT LEVEL 1		
0006		B	SF-1	8.5" x 2"	GR1-0		STAIR 6		
0007		B	PR-1	8.5" x 6"	GR1-0		AOO33 MENS LOCKER ROOM		

SHEET # GR1-0

Sign Re	Floo	Sign Ty	Size W	Sheet # ←	Message	Remarks	Date Insta
0009	B	PR-1	8.5" X 6"	GR1-0	C010 DPE EQUIP		
0010	B	RID-1	8.5" X 3"	GR1-0	C003 DOMESTIC HOT WATER		
0011	B	TF-1	8.5" x 10"	GR1-0	C004 RESTROOMS (MALE/FEMALE SYMBOL)		
0012	B	RID-1	8.5" X 3"	GR1-0	C009 JANITOR		
0013	B	TF-1	8.5" x 10"	GR1-0	C004 MEN (MEN'S SYMBOL)		
0014	B	TF-1	8.5" x 10"	GR1-0	C005 WOMEN (WOMEN'S SYMBOL)		
0015	B	RID-1	8.5" X 3"	GR1-0	C008 ELECTRICAL		

SHEET # GR1-0

Sign Re	Floo	Sign Ty	Size W	Sheet # ←	Message	Remarks	Date Insta
0016	B	RID-1	8.5" X 3"	GR1-0	C007 EMERGENCY ELECTRICAL		
0018	B	PR-1	8.5" X 6"	GR1-0	A0117 WOMEN'S LOCKER ROOM		
0019	B	RID-1	8.5" X 3"	GR1-0	A0102 FIRE PUMP		
0022	B	RID-1	8.5" X 3"	GR1-0	A0103 STEAM EQUIP.		
0023	B	RID-1	8.5" X 3"	GR1-0	C045 POOL CHEMICAL ROOM CHLORINE GAS		
0024	B	RID-1	8.5" X 3"	GR1-0	C045 POOL CHEMICAL ROOM CHLORINE GAS		
0025	B	RID-1	8.5" X 3"	GR1-0	C026 LAUNDRY		

SHEET # GR1-0

Sign Re	Floo	Sign Ty	Size W	Sheet # ←	Message	Remarks	Date Insta
0026	B	RID-1	8.5" X 3"	GR1-0	C027 DRYER		
0027	B	IO-1	8.5" x 5"	GR1-0	C023 1 Room Name Inser 2 Name Inserts	USMA to provide names of personnel and room name	
0028	B	PR-1	8.5" X 6"	GR1-0	C020 DIA EQUIPMENT		
0029	B	RID-1	8.5" X 3"	GR1-0	C024 SEWING		
0030	B	RID-1	8.5" X 3"	GR1-0	C030 TEL/DATA 2		
0031	B	RID-1	8.5" X 3"	GR1-0	C031 POOL EQUIPMENT		
0032	B	RID-1	8.5" X 3"	GR1-0	C028 SUMP PIT		

SHEET # GR1-0

Sign Re	Floo	Sign Ty	Size W	Sheet #	←	Message	Remarks	Date Insta
0033	B	PRW-1	8.5" X 18"	GR1-0		C040 INSTRUCTIONAL POOL		
0034	B	EDS-1	12" x 12"	GR1-0		LEVEL B STAIR 3 LEVEL S B-6 NO ROOF ACCESS		
					↑	EXIT LEVEL 4		
0035	B	SF-1	8.5" x 2"	GR1-0		STAIR 3		
0037	B	FEM-2	8.5" x 8"	GR1-0		(Fire Exit Stair S In Case of fire D Not Use Elevator I Stair		
0038	B	PRW-1	8.5" X 18"	GR1-0		B020 INTRAMURAL POOL		
0039	B	RID-1	8.5" X 3"	GR1-0		B091 CHEMICAL STORAGE		
0040	B	RID-1	8.5" X 3"	GR1-0		C044 DPE STORAGE		

SHEET # GR1-0

Sign Re	Floo	Sign Ty	Size W	Sheet # ←	Message	Remarks	Date Insta
0041	B	RID-1	8.5" X 3"	GR1-0	B024 GEN. POOL STORAGE		
0043	B	RID-1	8.5" X 3"	GR1-0	B025 DPE POOL STORAGE		
0044	B	RID-1	8.5" X 3"	GR1-0	C044 DPE STORAGE		
0046	B	IO-1	8.5" x 5"	GR1-0	C042 1 Room Name Inser 2 Name Inserts	USMA to provide names of personnel and room name	
0047	B	TF-1	8.5" x 10"	GR1-0	B004 DAY LOCKERS (MALE/FEMALE SYMBOL)	DPE to confirm M/02F symbol	
0050	B	IO-1	8.5" x 5"	GR1-0	B026 1 Room Name Inser 2 Name Inserts	USMA to provide names of personnel and room name	

SHEET # GR1-0

Sign Re	Floo	Sign Ty	Size W	Sheet #	←	Message	Remarks	Date Insta
0051	B	SD-1	28.5" 11"	GR1-0	→	Change Room Day Use Lockers		
					↑	Instructional Poo Equipment Issue Cadet Lockers		
					←	Elevator (symbol)		
0052	B	PRW-1	8.5" X 18"	GR1-0		C040 INSTRUCTIONAL POOL		
0053	B	RID-1	8.5" X 3"	GR1-0		C051 TEL/DATA 3		
0054	B	SD-1	28.5" 11"	GR1-0	→	Intramural Pool		
					↑	Change Room Day Use Lockers		
					←	Instructional Poo Equipment Issue Cadet Lockers		
0055	B	SD-1	28.5" 11"	GR1-0	→	Elevator (symbol)		
					↑	Intramural Pool		
					←	Change Room Day Use Lockers		
0056	B	NS-1	8.5" x 11"	GR1-0		(USMA to provide text)		
0057	B	RID-1	8.5" X 3"	GR1-0		B021 JANITOR		

SHEET # GR1-0

Sign Re	Floo	Sign Ty	Size W	Sheet # ←	Message	Remarks	Date Insta
0059	B	TF-1	8.5" x 10"	GR1-0	B022 RESTROOM (UNISEX SYMBOL)		
0061	B	FEM-2	8.5" x 8"	GR1-0	(Fire Exit Stair In Case of fire D Not Use Elevator Stair		
0062	B	RID-1	8.5" X 3"	GR1-0	B053 ELECTRICAL		
0063	B	RID-1	8.5" X 3"	GR1-0	B054 EMER. ELECTRICAL		
0064	B	RID-1	8.5" X 3"	GR1-0	B056 ELECTRICAL		
0068	B	PR-1	8.5" X 6"	GR1-0	MEN'S LOCKER ROOM		
0069	B	PRW-1	8.5" X 18"	GR1-0	B020 INTRAMURAL POOL		

SHEET # GR1-0

Sign Re	Floo	Sign Ty	Size W	Sheet # ←	Message	Remarks	Date Insta
0070	B	RID-1	8.5" X 3"	GR1-0	0145 STORAGE		
0072	B	PRW-1	8.5" X 18"	GR1-0	B020 INTRAMURAL POOL		
0074	B	PR-1	8.5" X 6"	GR1-0	(#TBD) CADET LOCKER ROOM		
0077	B	PRW-1	8.5" X 18"	GR1-0	C040 INSTRUCTIONAL POOL		
0078	B	NS-1	8.5" x 11"	GR1-0	(USMA to provide text)		
0079	B	NS-1	8.5" x 11" 8.5" x 11"8.5 x 11"8.5 x 11"	GR1-0	(USMA to provide text)		
0080	B	NS-1	8.5" x 11"	GR1-0	(USMA to provide text)		

SHEET # GR1-0

Sign Re	Floo	Sign Ty	Size W	Sheet # ←	Message	Remarks	Date Insta
0082	B	IO-1	8.5" x 6"	GR1-0	C047 1 Room Name Inser 3 Name Inserts	USMA to provide names of personnel and room name	
0085	B	RID-1	8.5" X 3"	GR1-0	B030 PUMP ROOM		
0086	B	RID-1	8.5" X 3"	GR1-0	B029 SUMP PUMP ROOM		

SHEET # GR1-1

Sign Re	Floo	Sign Ty	Size W	Sheet #	←	Message	Remarks	Date Insta
1001	1st	RID-1	8.5" X 3"	GR1-1		C113 ELECTRICAL		
1002	1st	PRW-1	8.5" X 18"	GR1-1		C149 DIA TAPING		
1003	1st	PRW-1	8.5" X 18"	GR1-1		C131 RECONDITIONING ROOM		
1005	1st	RID-1	8.5" X 3"	GR1-1		C113 ELECTRICAL		
1007	1st	RID-1	8.5" X 3"	GR1-1		C112 EMERGENCY ELECTRICAL		
1008	1st	TF-1	8.5" x 10"	GR1-1		C118 RESTROOM (UNISEX SYMBOL)		
1009	1st	RID-1	8.5" X 3"	GR1-1		C134 DPE STORAGE		

SHEET # GR1-1

Sign Re	Floo	Sign Ty	Size W	Sheet #	←	Message	Remarks	Date Insta
1010	1st	IO-1	8.5" x 9"	GR1-1		C117 1 Room Name Inser 6 Name Inserts	USMA to provide names of personnel and room name	
1011	1st	PRW-1	8.5" X 18"	GR1-1		C116 DPE REHAB		
1012	1st	RID-1	8.5" X 3"	GR1-1		C111 EMERGENCY GENERATOR		
1013	1st	EDS-1	12" x 12"	GR1-1		LEVEL 1 STAIR 6 LEVEL S B-4 NO ROOF ACCESS		
					→	EXIT THIS LEVEL		
1014	1st	EDS-1	12" x 12"	GR1-1		LEVEL 1 STAIR 6 LEVEL S B-4 NO ROOF ACCESS		
					→	EXIT THIS LEVEL		
1015	1st	SF-1	8.5" x 2"	GR1-1		STAIR 6		
1017	1st	PPD-2	33" X 35"	GR1-1	→	DPE/DIA Training side	DPE/DIA to confirm	
					←	DPE/DIA Training side		

SHEET # GR1-1

Sign Re	Floo	Sign Ty	Size W	Sheet #	←	Message	Remarks	Date Insta
1019	1st	EDS-1	12" x 12"	GR1-1		LEVEL 1 STAIR 6 LEVEL S B-4 NO ROOF ACCESS		
					→	EXIT THIS LEVEL		

SHEET # GR1-1

Sign Re	Floo	Sign Ty	Size W	Sheet # ←	Message	Remarks	Date Insta
1020	1st	DIR-1	57" x 26"	GR1-1	UNITED STATES MILITARY ACADEMY 727 ARVIN CADET PHYSICAL DEVELOPMENT CENTER B Cadet Lockers A A018 DIA Equipment C C020 DPE Equipment C C010 Instructional Poo C040 Intramural Pool I B020 1 DPE Rehab C C11 DIA Rehab C C14 Loading Dock B B137 PE Fitness A A10 A103 PT Rehab C C120 Reconditioning Room C C131 2 Gymnasium C C24 Hayes Gym A A20 Intramural Wrestl B B227, C C221-C224 Varsity Wrestling B226 3 Staff and Faculty B320 Gymnasium B B36 Hayes Gym Track A306 Multi-Purpose 1 C322 PE Weights C C3 Climbing Wall B B 4 Boxing C C435, C4 Racquetball C		

SHEET # GR1-1

Sign Re	Floo	Sign Ty	Size W	Sheet #	Message	Remarks	Date Insta
					C411-C420		
1022	1st	RID-1	8.5" X 3"	GR1-1	C108 ELECTRIC EMER. ELECTRIC		
1023	1st	RID-1	8.5" X 3"	GR1-1	C109 JANITOR		
1026	1st	PRW-1	8.5" X 18"	GR1-1	A102 PE FITNESS		
1027	1st	NS-1	8.5" x 11"	GR1-1	(USMA to provide text)		
1032	1st	PRW-1	8.5" X 18"	GR1-1	C148 DIA TAPING		
1033	1st	IO-1	8.5" x 5"	GR1-1	C146 1 Room Name Inser 2 Name Inserts	USMA to provide names of personnel and room name	
1038	1st	PRW-1	8.5" X 18"	GR1-1	C148 DIA REHAB		

SHEET # GR1-1

Sign Re	Floo	Sign Ty	Size W	Sheet #	Message	Remarks	Date Insta
1039	1st	IO-1	8.5" x 5"	GR1-1	C144 1 Room Name Inser 2 Name Inserts	USMA to provide names of personnel and room name	
1040	1st	IO-1	8.5" x 5"	GR1-1	C142 1 Room Name Inser 2 Name Inserts	USMA to provide names of personnel and room name	
1042	1st	TF-1	8.5" x 10"	GR1-1	C140 Women's Change Room (woman symbol)		
1043	1st	IO-1	8.5" X 6"	GR1-1	C141 1 Room Name Inser 3 NameInserts		
1044	1st	PRW-1	8.5" X 18"	GR1-1	C131 RECONDITIONING ROOM		
1045	1st	IO-1	8.5" X 3"	GR1-1	C124 1 Room Name Inser 2 Name Inserts		

SHEET # GR1-1

Sign Re	Floo	Sign Ty	Size W	Sheet # ←	Message	Remarks	Date Insta
1049	1st	IO-1	8.5" x 7"	GR1-1	C125 1 Room Name Inser 4 Name Inserts	USMA to provide names of personnel and room name	
1050	1st	IO-1	8.5" x 5"	GR1-1	C124 1 Room Name Inser 2 Name Inserts	USMA to provide names of personnel and room name	
1051	1st	IO-1	8.5" x 4"	GR1-1	C123 1 Room Name Inser 1 Name Inserts	USMA to provide names of personnel and room name	
1052	1st	PRW-1	8.5" X 18"	GR1-1	C120 PT REHAB		
1053	1st	RID-1	8.5" X 3"	GR1-1	C130 TEL./DATA		
1054	1st	IO-1	8.5" x 5"	GR1-1	A110 1 Room Name Inser 2 Name Inserts	USMA to provide names of personnel and room name	

SHEET # GR1-1

Sign Re	Floo	Sign Ty	Size W	Sheet # ←	Message	Remarks	Date Insta
1055	1st	RID-1	8.5" X 3"	GR1-1	A109 STORAGE		
1056	1st	PRW-1	8.5" X 18"	GR1-1	A102 PE FITNESS		
1057	1st	PRW-1	8.5" X 18"	GR1-1	A103 PE FITNESS		
1058	1st	RID-1	8.5" X 3"	GR1-1	A107 STORAGE		
1059	1st	IO-1	8.5" x 5"	GR1-1	A106 1 Room Name Inser 2 Name Inserts	USMA to provide names of personnel and room name	
1061	1st	PRW-1	8.5" X 18"	GR1-1	A102 PE FITNESS		
1062	1st	PRW-1	8.5" X 18"	GR1-1	A103 PE FITNESS		

SHEET # GR1-1

Sign Re	Floo	Sign Ty	Size W	Sheet #	←	Message	Remarks	Date Insta
1064	1st	EDS-1	12" x 12"	GR1-1		LEVEL 1 STAIR 3 LEVEL S B-6 NO ROOF ACCESS		
					↑	EXIT LEVEL 4		
1065	1st	SF-1	8.5" x 2"	GR1-1		STAIR 3		
1067	1st	RID-1	8.5" X 3"	GR1-1		C161 FAN ROOM		
1075	1st	RID-1	8.5" X 3"	GR1-1		C160 BIKE STORAGE		
1076	1st	RID-1	8.5" X 3"	GR1-1		B108 JANITOR		
1077	1st	PPD-2	33" X 35"	GR1-1	→	Loading Dock _____	side	
					←	Loading Dock	side	
1078	1st	RID-1	8.5" X 3"	GR1-1		B105 GENERAL STORAGE		

SHEET # GR1-1

Sign Re	Floo	Sign Ty	Size W	Sheet # ←	Message	Remarks	Date Insta
1079	1st	FEM-1	8.5" x 8"	GR1-1	(Fire Exit Stair In Case of fire D Not Use Elevator Stair		
1080	1st	RID-1	8.5" X 3"	GR1-1	B191 ELECTRIC		
1081	1st	RID-1	8.5" X 3"	GR1-1	B110 TEL./DATA 4		
1082	1st	RID-1	8.5" X 3"	GR1-1	B192 STORAGE		
1083	1st	RID-1	8.5" X 3"	GR1-1	B105 GENERAL STORAGE		
1084	1st	RID-1	8.5" X 3"	GR1-1	C151 TEL./DATA 3		

SHEET # GR1-1

Sign Re	Floo	Sign Ty	Size W	Sheet #	←	Message	Remarks	Date Insta
1085	1st	PPD-1	103" X 35"	GR1-1	→	Elevator (symbol) Center Lobby side		
					↓	Restrooms (symbol Observation		
					←	Loading Dock Bike Storage		
						_____		
					→	Loading Dock Bike Storage side		
					↓	PE Fitness Rehab/ Reconditioning		
					←	Elevator (symbol) Center Lobby		
1086	1st	IO-1	8.5" x 7"	GR1-1		B122	USMA to provide names of personnel and room name	
						1 Room Name Inser		
						4 Name Inserts		
1087	1st	IO-1	8.5" x 4"	GR1-1		B123	USMA to provide names of personnel and room name	
						1 Room Name Inser		
						1 Name Inserts		
1089	1st	TF-1	8.5" x 10"	GR1-1		B102		
						MEN		
						(MEN'S SYMBOL)		
1090	1st	TF-1	8.5" x 10"	GR1-1		B103		
						WOMEN		
						(WOMEN'S SYMBOL		

SHEET # GR1-1

Sign Re	Floo	Sign Ty	Size W	Sheet #	←	Message	Remarks	Date Insta
1092	1st	FEM-1	8.5" x 8"	GR1-1		(Fire Exit Stair In Case of fire D Not Use Elevator Stair		
1093	1st	RID-1	8.5" X 3"	GR1-1		B153 ELECTRICAL		
1094	1st	RID-1	8.5" X 3"	GR1-1		B154 EMER. ELEC.		
1096	1st	SD-1	28.5" 11"	GR1-1	→	Crandell Pool		
					↘	Intramural Pool Instructional Poo Lockers		
					←	Elevator (symbol) Rehab/Recondition g PE Fitness		

SHEET # GR1-1

Sign Re	Floo	Sign Ty	Size W	Sheet # ←	Message	Remarks	Date Insta
1097	1st	DIR-1	57" x 26"	GR1-1	UNITED STATES MILITARY ACADEMY 727ARVIN CADET PHYSICAL DEVELOPMENT CENTER B Cadet Lockers A A018 DIA Equipment C C020 DPE Equipment C C010 Instructional Poo C040 Intramural Pool I B020 1 DPE Rehab C C11 DIA Rehab C C14 Loading Dock B B137 PE Fitness A A10 A103 PT Rehab C C120 Reconditioning Room C C131 2 Gymnasium C C24 Hayes Gym A A20 Intramural Wrestl B B227, C C221-C224 Varsity Wrestling B226 3 Staff and Faculty B320 Gymnasium B B36 Hayes Gym Track A306 Multi-Purpose 1 C322 PE Weights C C3 Climbing Wall B B 4 Boxing C C435, C4 Racquetball C C411-C420		

SHEET # GR1-1

Sign Re	Floo	Sign Ty	Size W	Sheet # ←	Message	Remarks	Date Insta
1099	1st	PRW-1	8.5" X 18"	GR1-1	A103 PE FITNESS		
1106	1st	NOS-1	8.5" x 8"	GR1-1	(No Smoking Symbo No Smoking	DPE to confirm need	
1108	1st	IO-1	8.5" x 5"	GR1-1	B108 1 Room Name Inser 2 Name Inserts	USMA to provide names of personnel and room name	
1109	1st	IO-1	8.5" x 5"	GR1-1	B107 1 Room Name Inser 2 Name Inserts	USMA to provide names of personnel and room name	
1113	1st	NOS-1	8.5" x 8"	GR1-1	(No Smoking Symbo No Smoking	DPE to confirm need	
1114	1st	NOS-1	8.5" x 8"	GR1-1	(No Smoking Symbo No Smoking	DPE to confirm need	
1118	1st	IO-1	8.5" x 5"	GR1-1	B103 1 Room Name Inser 2 Name Inserts	USMA to provide names of personnel and room name	

SHEET # GR1-1

Sign Re	Floo	Sign Ty	Size W	Sheet # ←	Message	Remarks	Date Insta
1119	1st	IO-1	8.5" x 7"	GR1-1	B103 1 Room Name Inser 4 Name Inserts	USMA to provide names of personnel and room name	
1120	1st	IO-1	8.5" x 5"	GR1-1	B105 1 Room Name Inser 2 Name Inserts	USMA to provide names of personnel and room name	
1130	1st	PR-1	8.5" X 6"	GR1-1	C116 DPE TAPING		
1131	1st	PR-1	8.5" X 6"	GR1-1	C115 DPE REHAB		
1136	1st	NS-1	8.5" x 11"	GR1-1	(USMA to provide text)		
1140	1st	RID-1	8.5" X 3"	GR1-1	B193 ICE ROOM		
1141	1st	RID-1	8.5" X 3"	GR1-1	B193 ICE ROOM		

SHEET # GR1-1

Sign Re	Floo	Sign Ty	Size W	Sheet # ←	Message	Remarks	Date Insta
1142	1st	RID-1	8.5" X 3"	GR1-1	C145 POOL MECHANICAL ROOM		
1143	1st	PRW-1	8.5" X 18"	GR1-1	C137 HYDRO THERAPY		
1144	1st	TF-1	8.5" x 10"	GR1-1	C140 CHANGE ROOM MEN'S SYMBOL		
1145	1st	RID-1	8.5" X 3"	GR1-1	C148 DIA STORAGE		
1146	1st	RID-1	8.5" X 3"	GR1-1	C145 DPE STORAGE		
1147	1st	RID-1	8.5" X 3"	GR1-1	C164 GENERAL STORAGE		
1148	1st	PR-1	8.5" X 6"	GR1-1	C163 BREAK ROOM		

SHEET # GR1-1

Sign Re	Floo	Sign Ty	Size W	Sheet #	←	Message	Remarks	Date Insta
1149	1st	TF-1	8.5" x 10"	GR1-1		C165 RESTROOM (MEN/WOMEN'S SYMBOL		
1150	1st	IO-1	8.5" x 5"	GR1-1		C167 1 Room Name Inser 2 Name Inserts	USMA to provide names of personnel and room name	
1151	1st	PR-1	8.5" X 6"	GR1-1		C162 SHOP		
1152	1st	RID-1	8.5" X 3"	GR1-1		B105 GENERAL STORAGE		
1153	1st	NENT-1	8.5" x 8"	GR1-1		(Do Not Enter Symbol) No Entry	DPE to confirm need	
1154	1st	EDS-1	12" x 12"	GR1-1		LEVEL1 STAIR 4 LEVEL S 1-4 NO ROOF ACCESS ➔ EXIT THIS LEVEL		
1156	1st	SF-1	8.5" x 2"	GR1-1		STAIR 3		

SHEET # GR1-2

Sign Re	Floo	Sign Ty	Size W	Sheet #	←	Message	Remarks	Date Insta
2001	2nd	RID-1	8.5" X 3"	GR1-2		C229 EMER. ELECTRIC		
2002	2nd	EDS-1	12" x 12"	GR1-2		LEVEL 2 STAIR 1 LEVEL S 2-6 NO ROOF ACCESS		
					↑	EXIT LEVEL 5		
2003	2nd	RID-1	8.5" X 3"	GR1-2		C228 ELECTRIC		
2004	2nd	SF-1	8.5" x 2"	GR1-2		STAIR 1		
2006	2nd	PRW-1	8.5" X 18"	GR1-2		C224 INTRAMURAL WRESTLING		
2008	2nd	PRW-1	8.5" X 18"	GR1-2		C223 INTRAMURAL WRESTLING		
2010	2nd	PRW-1	8.5" X 18"	GR1-2		C221 INTRAMURAL WRESTLING		

SHEET # GR1-2

Sign Re	Floo	Sign Ty	Size W	Sheet #	←	Message	Remarks	Date Insta
2015	2nd	EDS-1	12" x 12"	GR1-2		LEVEL 2 STAIR 6 LEVEL S B-4 NO ROOF ACCESS		
					↓	EXIT LEVEL 1		
2016	2nd	SF-1	8.5" x 2"	GR1-2		STAIR 6		
2018	2nd	PPD-2	33" X 35"	GR1-2	→	Intramural Wrestl side _____		
					←	Intramural Wrestl		
2019	2nd	TF-1	8.5" x 10"	GR1-2		C204 RESTROOM (MEN'S/ WOMEN'S SYMBOL)		
2020	2nd	RID-1	8.5" X 3"	GR1-2		C220 HAYES STORAGE		
2021	2nd	PRW-1	8.5" X 18"	GR1-2		A202 HAYES GYMNASIUM		
2022	2nd	RID-1	8.5" X 3"	GR1-2		C220 HAYES STORAGE		

SHEET # GR1-2

Sign Re	Floo	Sign Ty	Size W	Sheet # ←	Message	Remarks	Date Insta
2023	2nd	RID-1	8.5" X 3"	GR1-2	C209 JANITOR		
2024	2nd	RID-1	8.5" X 3"	GR1-2	C208 ELECTRIC		
2025	2nd	TF-1	8.5" x 10"	GR1-2	C204 MEN (MEN'S SYMBOL)		
2026	2nd	TF-1	8.5" x 10"	GR1-2	C205 WOMEN (WOMEN'S SYMBOL)		
2027	2nd	RID-1	8.5" X 3"	GR1-2	C207 EMER. ELECTRIC		
2031	2nd	PRW-1	8.5" X 18"	GR1-2	A202 HAYES GYMNASIUM		
2033	2nd	RID-1	8.5" X 3"	GR1-2	C247 SOUND CLOSET		

SHEET # GR1-2

Sign Re	Floo	Sign Ty	Size W	Sheet #	←	Message	Remarks	Date Insta
2034	2nd	RID-1	8.5" X 3"	GR1-2		C241 JANITOR		
2035	2nd	EDS-1	12" x 12"	GR1-2		LEVEL 2 STAIR 2 LEVEL S 2-5 NO ROOF ACCESS		
					↑	EXIT LEVEL 5		
2036	2nd	SF-1	8.5" x 2"	GR1-2		STAIR 2		
2038	2nd	RID-1	8.5" X 3"	GR1-2		C243 WRESTLING STORAGE		
2039	2nd	SF-1	8.5" x 2"	GR1-2		STAIR 2		
2041	2nd	RID-1	8.5" X 3"	GR1-2		C231 TEL./DATA 1		
2042	2nd	RID-1	8.5" X 3"	GR1-2		C234 SOUND CLOSET		
2043	2nd	RID-1	8.5" X 3"	GR1-2		C227 SOUND CLOSET		

SHEET # GR1-2

Sign Re	Floo	Sign Ty	Size W	Sheet # ←	Message	Remarks	Date Insta
2044	2nd	RID-1	8.5" X 3"	GR1-2	C226 WRESTLING STORAGE		
2046	2nd	RID-1	8.5" X 3"	GR1-2	C244 GYM STORAGE		
2048	2nd	RID-1	8.5" X 3"	GR1-2	C222 WRESTLING STORAGE		
2049	2nd	RID-1	8.5" X 3"	GR1-2	C246 CRD EQUIPMENT		
2051	2nd	IO-1	8.5" x 5"	GR1-2	C245 1 Room Name Inser 2 Name Inserts	USMA to provide names of personnel and room name	
2053	2nd	RID-1	8.5" X 3"	GR1-2	C220 HAYES STORAGE		
2054	2nd	RID-1	8.5" X 3"	GR1-2	C230 TEL./DATA 2		

SHEET # GR1-2

Sign Re	Floo	Sign Ty	Size W	Sheet #	←	Message	Remarks	Date Insta
2055	2nd	PRW-1	8.5" X 18"	GR1-2		C240 CENTRAL GYMNASIUM		
2056	2nd	PRW-1	8.5" X 18"	GR1-2		A202 HAYES GYMNASIUM		
2058	2nd	EDS-1	12" x 12"	GR1-2		LEVEL 2 STAIR 3 LEVEL S B-6 NO ROOF ACCESS		
					↑	EXIT LEVEL 4		
2059	2nd	RID-1	8.5" X 3"	GR1-2		B253 STORAGE		
2062	2nd	SF-1	8.5" x 2"	GR1-2		STAIR 3		
2066	2nd	PRW-1	8.5" X 18"	GR1-2		C240 CENTRAL GYMNASIUM		
2069	2nd	FEM-1	8.5" x 8"	GR1-2		(Fire Exit Stair In Case of fire D Not Use Elevator Stair		

SHEET # GR1-2

Sign Re	Floo	Sign Ty	Size W	Sheet # ←	Message	Remarks	Date Insta
2071	2nd	RID-1	8.5" X 3"	GR1-2	B210 TEL./DATA 4		
2074	2nd	RID-1	8.5" X 3"	GR1-2	B208 JANITOR		
2075	2nd	PRW-1	8.5" X 18"	GR1-2	B227 INTRAMURAL WRESTLING		
2077	2nd	RID-1	8.5" X 3"	GR1-2	B229 SOUND CLOSET		
2079	2nd	PRW-1	8.5" X 18"	GR1-2	C240 CENTRAL GYMNASIUM		
2080	2nd	TF-1	8.5" x 10"	GR1-2	B206 WOMEN'S DAY USE LOCKERS (WOMEN'S SYMBOL)		
2081	2nd	RID-1	8.5" X 3"	GR1-2	B228 WRESTLING STORAGE		

SHEET # GR1-2

Sign Re	Floo	Sign Ty	Size W	Sheet #	←	Message	Remarks	Date Insta
2084	2nd	TF-1	8.5" x 10"	GR1-2		B207 MEN'S DAY USE LOCKERS (MEN'S SYMBOL)		
2087	2nd	PRW-1	8.5" X 18"	GR1-2		C240 CENTRAL GYMNASIUM		
2088	2nd	PPD-1	103" X 35"	GR1-2	→	Elevator (symbol) side Center Lobby		
					↑	Restrooms (symbol Varsity Wrestling		
					←	Gymnasium Intramural Wrestl Day Use Lockers _____		
					→	Gymnasium Intramural wrestl Day Use Lockers		
					↑	Gymnasium Hayes Gymnasium Intramural Wrestl		
					←	Elevator (symbol) Center Lobby		
2090	2nd	PRW-1	8.5" X 18"	GR1-2		B220 VARSITY WRESTLING		
2092	2nd	TF-1	8.5" x 10"	GR1-2		B202 MEN (MEN'S SYMBOL)		

SHEET # GR1-2

Sign Re	Floo	Sign Ty	Size W	Sheet # ←	Message	Remarks	Date Insta
2093	2nd	TF-1	8.5" x 10"	GR1-2	B221 WOMEN (WOMEN'S SYMBOL)		
2094	2nd	RID-1	8.5" X 3"	GR1-2	B221 WRESTLING STORAGE		
2096	2nd	FEM-1	8.5" x 8"	GR1-2	(Fire Exit Stair S In Case of fire D Not Use Elevator I Stair		
2097	2nd	RID-1	8.5" X 6"	GR1-2	B222 TEAM ROOM		
2099	2nd	PRW-1	8.5" X 18"	GR1-2	B220 VARSITY WRESTLING		
2100	2nd	RID-1	8.5" X 3"	GR1-2	B253 ELECTRICAL		
2101	2nd	RID-1	8.5" X 3"	GR1-2	B254 EMER. ELEC.		

SHEET # GR1-2

Sign Re	Floo	Sign Ty	Size W	Sheet #	←	Message	Remarks	Date Insta
2109	2nd	PRW-1	8.5" X 18"	GR1-2		A202 HAYES GYMNASIUM		
2116	2nd	PR-1	8.5" X 6"	GR1-2		B208 MEETING/ READING	DPE to confirm need	
2117	2nd	RID-1	8.5" X 3"	GR1-2		C213 WRESTLING STORAGE		
2119	2nd	RID-1	8.5" X 3"	GR1-2		C225 SOUND CLOSET		
2120	2nd	RID-1	8.5" X 3"	GR1-2		C254 STORAGE		
2122	2nd	SF-1	8.5" x 2"	GR1-2		STAIR 4		
2123	2nd	EDS-1	12" x 12"	GR1-2		LEVEL 2 STAIR 4 LEVEL S 1-4 NO ROOF ACCESS ↓ EXIT LEVEL 1		

SHEET # GR1-2

Sign Re	Floo	Sign Ty	Size W	Sheet # ←	Message	Remarks	Date Insta
2124	2nd	RID-1	8.5" X 3"	GR1-2	B212 ELECTRICAL		
2125	2nd	RID-1	8.5" X 3"	GR1-2	C251 TEL/DATA 3		
2126	2nd	RID-1	8.5" X 3"	GR1-2	C225 SOUND CLOSET		
2141	2nd	IO-1	8.5" x 5"	GR1-2	B224 1 Room Name Inser 2 Name Inserts	USMA to provide names of personnel and room name	
2142	2nd	IO-1	8.5" x 7"	GR1-2	B225 1 Room Name Inser 4 Name Inserts	USMA to provide names of personnel and room name	
2143	2nd	PRW-1	8.5" X 18"	GR1-2	B220 VARSITY WRESTLING		
2144	2nd	RID-1	8.5" X 3"	GR1-2	B204 STORAGE	DPE to confirm need	

SHEET # GR1-2

Sign Re	Floo	Sign Ty	Size W	Sheet # ←	Message	Remarks	Date Insta
2146	2nd	NS-1	8.5" x 11"	GR1-2	(USMA to provide text)		
2148	2nd	NS-1	8.5" x 11"	GR1-2	(USMA to provide text)		
2149	2nd	PR-1	8.5" X 6"	GR1-2	B203 MEETING/ READING	DPE to confirm need	
2150	2nd	NS-1	8.5" x 11"	GR1-2	(USMA to provide text)		
2152	2nd	NS-1	8.5" x 11"	GR1-2	(USMA to provide text)		
2154	2nd	NS-1	8.5" x 11"	GR1-2	(USMA to provide text)		
2160	2nd	NS-1	8.5" x 11"	GR1-2	(USMA to provide text)		
2165	2nd	NS-1	8.5" x 11"	GR1-2	(USMA to provide text)		
2180	2nd	RID-1	8.5" X 3"	GR1-2	C203 TEL./DATA	(same message both sides)	

SHEET # GR1-2

Sign Re	Floo	Sign Ty	Size W	Sheet #	←	Message	Remarks	Date Insta
2191	2nd	RID-1	8.5" X 3"	GR1-2		C242 GYM STORAGE		

SHEET # GR1-3

Sign Re	Floo	Sign Ty	Size W	Sheet #	←	Message	Remarks	Date Insta
3001	3rd	RID-1	8.5" X 3"	GR1-3		C329 EMER. ELECTRIC		
3002	3rd	PRW-1	8.5" X 18"	GR1-3		C322 MULTI-PURPOSE 1		
3004	3rd	RID-1	8.5" X 3"	GR1-3		C328 ELECTRIC		
3005	3rd	SF-1	8.5" x 2"	GR1-3		STAIR 1		
3007	3rd	EDS-1	12" x 12"	GR1-3		LEVEL 3 STAIR 1 LEVEL S 2-6 NO ROOF ACCESS		
					↑	EXIT LEVEL 5		
3008	3rd	PRW-1	8.5" X 18"	GR1-3		MULTI-PURPOSE 1		
3010	3rd	RID-1	8.5" X 3"	GR1-3		C323 STORAGE		
3011	3rd	RID-1	8.5" X 3"	GR1-3		C324 STORAGE		

SHEET # GR1-3

Sign Re	Floo	Sign Ty	Size W	Sheet #	←	Message	Remarks	Date Insta
3012	3rd	RID-1	8.5" X 3"	GR1-3		C325 STORAGE		
3013	3rd	PRW-1	8.5" X 18"	GR1-3		C320 PE WEIGHTS		
3014	3rd	RID-1	8.5" X 3"	GR1-3		C326 STORAGE		
3015	3rd	RID-1	8.5" X 3"	GR1-3		C335 STORAGE		
3017	3rd	PRW-1	8.5" X 18"	GR1-3		C332 MULTI-PURPOSE 1		
3018	3rd	RID-1	8.5" X 3"	GR1-3		C331 TEL./DATA 1		
3019	3rd	SF-1	8.5" x 2"	GR1-3		STAIR 6		
3021	3rd	EDS-1	12" x 12"	GR1-3		LEVEL 3 STAIR 6 LEVEL S B-4 NO ROOF ACCESS ↓ EXIT LEVEL 1		

SHEET # GR1-3

Sign Re	Floo	Sign Ty	Size W	Sheet #	←	Message	Remarks	Date Insta
3022	3rd	PPD-2	103" X 35"	GR1-3	→	Multi-Purpose 1	side	
					←	Multi-Purpose 1	side	
3023	3rd	TF-1	8.5" x 10"	GR1-3		C304 RESTROOM (MEN'S/ WOMEN'S SYMBOL)		
3024	3rd	PRW-1	8.5" X 18"	GR1-3		C320 PE WEIGHTS		
3026	3rd	RID-1	8.5" X 3"	GR1-3		C333 SOUND CLOSET		
3027	3rd	RID-1	8.5" X 3"	GR1-3		C321 STORAGE		
3029	3rd	PRW-1	8.5" X 18"	GR1-3		C320 PE WEIGHTS		
3030	3rd	RID-1	8.5" X 3"	GR1-3		C330 TEL./DATA 2		

SHEET # GR1-3

Sign Re	Floo	Sign Ty	Size W	Sheet # ←	Message	Remarks	Date Insta
3031	3rd	RID-1	8.5" X 3"	GR1-3	C309 JANITOR		
3032	3rd	TF-1	8.5" x 10"	GR1-3	C304 MEN'S (MEN'S SYMBOL)		
3033	3rd	RID-1	8.5" X 3"	GR1-3	C308 ELECTRICAL		
3034	3rd	TF-1	8.5" x 10"	GR1-3	C305 WOMEN (WOMEN'S SYMBOL)		
3035	3rd	RID-1	8.5" X 3"	GR1-3	C307 EMER. ELECTRICAL		
3036	3rd	IO-1	8.5" x 7"	GR1-3	A303 1 Room Name Inser 4 Name Inserts	USMA to provide names of personnel and room name	

SHEET # GR1-3

Sign Re	Floo	Sign Ty	Size W	Sheet #	←	Message	Remarks	Date Insta
3037	3rd	IO-1	8.5" x 7"	GR1-3		A302 1 Room Name Inser 4 Name Inserts	USMA to provide names of personnel and room name DPE to verify message	
3038	3rd	PRW-1	8.5" X 18"	GR1-3		A306 HAYES GYM TRACK LEVEL		
3040	3rd	EDS-1	12" x 12"	GR1-3	↑	LEVEL 3 STAIR 3 LEVEL S B-6 NO ROOF ACCESS EXIT LEVEL 4		
3041	3rd	SF-1	8.5" x 2"	GR1-3		STAIR 3		
3043	3rd	RID-1	8.5" X 3"	GR1-3		C357 GENERAL STORAGE		
3045	3rd	FEM-1	8.5" x 8"	GR1-3		(Fire Exit Stair S In Case of fire D Not Use Elevator I Stair		
3048	3rd	RID-1	8.5" X 3"	GR1-3		B308 JANITOR		

SHEET # GR1-3

Sign Re	Floo	Sign Ty	Size W	Sheet # ←	Message	Remarks	Date Insta
3049	3rd	PRW-1	8.5" X 18"	GR1-3	B307 CLIMBING WALL		
3050	3rd	RID-1	8.5" X 3"	GR1-3	B310 TEL./DATA 4		
3051	3rd	RID-1	8.5" X 3"	GR1-3	B311 GENERAL STORAGE		
3053	3rd	PRW-1	8.5" X 18"	GR1-3	B341 MEDIA PROJECTION		
3054	3rd	PR-1	8.5" X 6"	GR1-3	B355 GUIDANCE/ TESTING		
3055	3rd	RID-1	8.5" x 3"	GR1-3	B351 STORAGE		
3056	3rd	IO-1	8.5" x 7"	GR1-3	B352 1 Room Name Inser 4 Name Inserts	USMA to provide names of personnel and room name	

SHEET # GR1-3

Sign Re	Floo	Sign Ty	Size W	Sheet #	←	Message	Remarks	Date Insta
3057	3rd	PR-1	8.5" X 6"	GR1-3		B350 HUMAN PERFORMANCE LAB		
3059	3rd	RID-1	8.5" X 3"	GR1-3		B351 STORAGE		
3060	3rd	PRW-1	8.5" X 18"	GR1-3		B350 HUMAN PERFORMANCE LAB		
3061	3rd	SF-1	8.5" x 2"	GR1-3		STAIR 4		
3063	3rd	EDS-1	12" x 12"	GR1-3		LEVEL 3 STAIR 4 LEVEL S 1-4 NO ROOF ACCESS EXIT LEVEL 1		
3072	3rd	RID-1	8.5" X 3"	GR1-3		B342 STORAGE		
3073	3rd	IO-1	8.5" x 4"	GR1-3		B343 1 Room Name Inser 1 Name Inserts	USMA to provide names of personnel and room name	

SHEET # GR1-3

Sign Re	Floo	Sign Ty	Size W	Sheet # ←	Message	Remarks	Date Insta
3074	3rd	PRW-1	8.5" X 18"	GR1-3	B341 MEDIA PROJECTION		
3075	3rd	RID-1	8.5" X 3"	GR1-3	B348 COUNSELING ROOM		
3076	3rd	RID-1	8.5" X 3"	GR1-3	B349 ADMIN. STORAGE		
3077	3rd	UL-1	12" x	GR1-3	B338 MOS	DPE to confirm need	
3078	3rd	DTD-1	12" x	GR1-3	B336 MASTER OF THE SWORD USMA	DPE to confirm need	
3079	3rd	UL-1	12" x	GR1-3	B337 DEPUTY	DPE to confirm need	
3080	3rd	IO-1	8.5" x 7"	GR1-3	B344 1 Room Name Inser 4 Name Inserts	USMA to provide names of personnel and room name	

SHEET # GR1-3

Sign Re	Floo	Sign Ty	Size W	Sheet # ←	Message	Remarks	Date Insta
3081	3rd	IO-1	8.5" x 4"	GR1-3	B347 1 Room Name Inser 1 Name Inserts	USMA to provide names of personnel and room name	
3082	3rd	RID-1	8.5" X 3"	GR1-3	B346 COPY		
3083	3rd	RID-1	8.5" X 3"	GR1-3	B333 KITCHEN		
3084	3rd	IO-1	8.5" x 4"	GR1-3	B335 1 Room Name Inser 1 Name Inserts	USMA to provide names of personnel and room name	
3085	3rd	DTD-1	12" x	GR1-3	B336 MASTER OF THE SWORD USMA		
3086	3rd	IO-1	8.5" x 7"	GR1-3	B345 1 Room Name Inser 4 Name Inserts	USMA to provide names of personnel and room name	

SHEET # GR1-3

Sign Re	Floo	Sign Ty	Size W	Sheet # ←	Message	Remarks	Date Insta
3087	3rd	IO-1	8.5" x 7"	GR1-3	B326 1 Room Name Inser 4 Name Inserts	USMA to provide names of personnel and room name	
3088	3rd	IO-1	8.5" x 5"	GR1-3	B330 1 Room Name Inser 2 Name Inserts	USMA to provide names of personnel and room name	
3089	3rd	IO-1	8.5" x 4"	GR1-3	B326 1 Room Name Inser 1 Name Inserts	USMA to provide names of personnel and room name	
3090	3rd	RID-1	8.5" X 3"	GR1-3	B329 IMO STORAGE		
3091	3rd	IO-1	8.5" x 5"	GR1-3	B331 1 Room Name Inser 2 Name Inserts	USMA to provide names of personnel and room name	

SHEET # GR1-3

Sign Re	Floo	Sign Ty	Size W	Sheet #	←	Message	Remarks	Date Insta
3092	3rd	IO-1	8.5" x 4"	GR1-3		B332 1 Room Name Inser 1 Name Inserts	USMA to provide names of personnel and room name	
3093	3rd	PRW-1	8.5" X 18"	GR1-3		B307 CLIMBING WALL		
3094	3rd	RID-1	8.5" X 3"	GR1-3		C351 TEL/DATA 3		
3095	3rd	PPD-1	103" X 35"	GR1-3	→	Elevator (symbol) Center Lobby side		
					↑	Restrooms (symbol Department of Physical Educatio		
					←	Climbing Wall _____		
					→	Climbing Wall side		
					↑	PE Weights Hayes Gym Track Multi-Purpose		
					←	Elevator (symbol) Center Lobby		
3097	3rd	TF-1	8.5" x 10"	GR1-3		B302 MEN'S (MEN'S SYMBOL)		

SHEET # GR1-3

Sign Re	Floo	Sign Ty	Size W	Sheet # ←	Message	Remarks	Date Insta
3098	3rd	TF-1	8.5" x 10"	GR1-3	B303 WOMEN (WOMEN'S SYMBOL)		
3099	3rd	PR-1	8.5" X 6"	GR1-3	B320 DEPARTMENT OF PHYSICAL EDUCATION		
3100	3rd	IO-1	8.5" x 4"	GR1-3	B323 1 Room Name Inser 1 Name Inserts	USMA to provide names of personnel and room name	
3101	3rd	IO-1	8.5" x 4"	GR1-3	B324 1 Room Name Inser 1 Name Inserts	USMA to provide names of personnel and room name	
3102	3rd	PRW-1	8.5" X 18"	GR1-3	B322 CONFERENCE ROOM		
3103	3rd	FD-1	20" x 22"	GR1-3	B322 STAFF AND FACULTY PERSONNEL RM #	USMA to provide names of personnel and room number	

SHEET # GR1-3

Sign Re	Floo	Sign Ty	Size W	Sheet # ←	Message	Remarks	Date Insta
3104	3rd	FEM-1	8.5" x 8"	GR1-3	(Fire Exit Stair S In Case of fire D Not Use Elevator I Stair		
3105	3rd	RID-1	8.5" X 3"	GR1-3	B353 ELECTRIC		
3106	3rd	RID-1	8.5" X 3"	GR1-3	B354 EMER. ELEC.		
3107	3rd	NENT-1	8.5" x 8"	GR1-3	(Do Not Enter Symbol) No Entry		
3109	3rd	PRW-1	8.5" X 18"	GR1-3	A306 HAYES GYM TRACK LEVEL		
3113	3rd	IO-1	8.5" x 4"	GR1-3	B304 1 Room Name Inser 1 Name Inserts	USMA to provide names of personnel and room name	
3118	3rd	IO-1	8.5" x 4"	GR1-3	B308 1 Room Name Inser 1 Name Inserts	USMA to provide names of personnel and room name	

SHEET # GR1-3

Sign Re	Floo	Sign Ty	Size W	Sheet #	←	Message	Remarks	Date Insta
3123	3rd	IO-1	8.5" x 4"	GR1-3		B303 1 Room Name Inser 1 Name Inserts	USMA to provide names of personnel and room name	
3127	3rd	NS-1	8.5" x 11"	GR1-3		(USMA to provide text)		
3128	3rd	NS-1	8.5" x 11"	GR1-3		(USMA to provide text)		
3129	3rd	NS-1	8.5" x 11" 8.5" x 11"	GR1-3		(USMA to provide text)		
3135	3rd	EDS-1	12" x 12"	GR1-3		LEVEL 3 STAIR 2 LEVEL S 2-5 NO ROOF ACCESS ↑ EXIT LEVEL 5		
3136	3rd	SF-1	8.5" x 2"	GR1-3		STAIR 2		
3140	3rd	SF-1	8.5" x 2"	GR1-3		STAIR 2		
3152	3rd	ASW-2		GR1-3		DEPARTMENT OF PHYSICAL EDUCATION (USMA SHIELD)		

SHEET # GR1-3

Sign Re	Floo	Sign Ty	Size W	Sheet # ←	Message	Remarks	Date Insta
3154	3rd	IO-1	8.5" x 6"	GR1-3	B328 3 Room Name Inser 3 Name Inserts	USMA to provide names of personnel and room name	
3155	3rd	ASW-2		GR1-3	DEPARTMENT OF PHYSICAL EDUCATION (USMA SHIELD)		

SHEET # GR1-4

Sign Re	Floo	Sign Ty	Size W	Sheet #	←	Message	Remarks	Date Insta
4001	4th	EDS-1	12" x 12"	GR1-4		LEVEL 4 STAIR 1 LEVEL S 2-6 NO ROOF ACCESS		
					↑	EXIT LEVEL 5		
4002	4th	RID-1	8.5" X 3"	GR1-4		C428 ELECTRIC		
4003	4th	RID-1	8.5" X 3"	GR1-4		C429 EMER. ELECTRIC		
4004	4th	NS-1	8.5" x 11"	GR1-4		BALCONY SPACE IS LIMITED TO ABLE-BODIED MILITARY PERSONNEL ONLY		
4005	4th	SF-1	8.5" x 2"	GR1-4		STAIR 1		
4006	4th	RID-1	8.5" X 3"	GR1-4		C439 STORAGE		
4007	4th	RID-1	8.5" X 3"	GR1-4		C437 SOUND CLOSET		

SHEET # GR1-4

Sign Re	Floo	Sign Ty	Size W	Sheet #	←	Message	Remarks	Date Insta
4008	4th	NS-1	8.5" x 11"	GR1-4		BALCONY SPACE IS LIMITED TO ABLE-BODIED MILITARY PERSONNEL ONLY		
4009	4th	PRW-1	8.5" X 18"	GR1-4		C435 BOXING		
4011	4th	PR-1	8.5" X 6"	GR1-4		C440 GYMNASIUM		
4012	4th	SF-1	8.5" x 2"	GR1-4		STAIR 2		
4014	4th	EDS-1	12" x 12"	GR1-4		LEVEL 4 STAIR 2 LEVEL S 2-5 NO ROOF ACCESS		
					↑	EXIT LEVEL 5		
4016	4th	PR-1	8.5" X 6"	GR1-4		C440 GYMNASIUM		
4017	4th	SF-1	8.5" x 2" 8.5" x 2"	GR1-4		STAIR 2		
4019	4th	RID-1	8.5" X 3"	GR1-4		C431 TEL./DATA 1		

SHEET # GR1-4

Sign Re	Floo	Sign Ty	Size W	Sheet # ←	Message	Remarks	Date Insta
4020	4th	PRW-1	8.5" X 18"	GR1-4	C435 BOXING		
4021	4th	PRW-1	8.5" X 18"	GR1-4	C436 BOXING		
4023	4th	PRW-1	8.5" X 18"	GR1-4	C436 BOXING		
4025	4th	RID-1	8.5" X 3"	GR1-4	C444 STORAGE		
4026	4th	VG-1	N/A	GR1-4	C413 RACQUETBALL		
4027	4th	VG-1	N/A	GR1-4	C422 RACQUETBALL		
4028	4th	VG-1	N/A	GR1-4	C412 RACQUETBALL		
4029	4th	VG-1	N/A	GR1-4	C421 RACQUETBALL		
4030	4th	VG-1	N/A	GR1-4	C411 RACQUETBALL		

SHEET # GR1-4

Sign Re	Floo	Sign Ty	Size W	Sheet #	←	Message	Remarks	Date Insta
4031	4th	VG-1	N/A	GR1-4		C420 RACQUETBALL		
4032	4th	RID-1	8.5" X 3"	GR1-4		C436 SOUND CLOSET		
4033	4th	EDS-1	12" x 12"	GR1-4		LEVEL 4 STAIR 6 LEVEL S B-4 NO ROOF ACCESS		
					↓	EXIT LEVEL 1		
4034	4th	SF-1	8.5" x 2"	GR1-4		STAIR 6		
4036	4th	RID-1	8.5" X 3"	GR1-4		C430 TEL./DATA 2		
4037	4th	PRW-1	8.5" X 18"	GR1-4		C440 GYMNASIUM		
4039	4th	RID-1	8.5" X 3"	GR1-4		C442 GYM STORAGE		
4040	4th	TF-1	8.5" x 10"	GR1-4		C404 RESTROOMS (RESTROOM SYMBOL)		

SHEET # GR1-4

Sign Re	Floo	Sign Ty	Size W	Sheet # ←	Message	Remarks	Date Insta
4041	4th	RID-1	8.5" X 3"	GR1-4	C409 JANITOR		
4042	4th	TF-1	8.5" x 10"	GR1-4	C404 MEN'S (MEN'S SYMBOL)		
4043	4th	TF-1	8.5" x 10"	GR1-4	C405 WOMEN (WOMEN'S SYMBOL)		
4044	4th	RID-1	8.5" X 3"	GR1-4	C408 ELECTRICAL		
4045	4th	RID-1	8.5" X 3"	GR1-4	C441 GYM STORAGE		
4046	4th	RID-1	8.5" X 3"	GR1-4	C443 SOUND CLOSET		
4047	4th	PRW-1	8.5" X 18"	GR1-4	C440 GYMNASIUM		

SHEET # GR1-4

Sign Re	Floo	Sign Ty	Size W	Sheet # ←	Message	Remarks	Date Insta
4050	4th	RID-1	8.5" X 3"	GR1-4	B408 JANITOR		
4051	4th	FEM-1	8.5" x 8"	GR1-4	(Fire Exit Stair In Case of fire D Not Use Elevator Stair		
4052	4th	RID-1	8.5" X 3"	GR1-4	B410 TEL./DATA 4		
4053	4th	RID-1	8.5" X 3"	GR1-4	C412 ELECTRIC		
4061	4th	SF-1	8.5" x 2" 8.5" x 2"	GR1-4	STAIR 4		
4063	4th	EDS-1	12" x 12"	GR1-4	LEVEL 4 STAIR 4 LEVEL S 1-4 NO ROOF ACCESS ↓ EXIT LEVEL 1		
4066	4th	PRW-1	8.5" X 18"	GR1-4	C440 GYMNASIUM		

SHEET # GR1-4

Sign Re	Floo	Sign Ty	Size W	Sheet #	←	Message	Remarks	Date Insta
4069	4th	RID-1	8.5" X 3"	GR1-4		B451 TEL./DATA 3		
4070	4th	PPD-2	33" X 35"	GR1-4	→	Elevator (Elevato	side	
						symbol) _____		
					↑	Gymnasium Racquetball Boxing	side	
4072	4th	TF-1	8.5" x 10"	GR1-4		B402 RESTROOMS (RESTROOM SYMBOL)		
4073	4th	RID-1	8.5" X 3"	GR1-4		B411 STORAGE		
4074	4th	NS-1	8.5" x 11" 8.5" x 11"	GR1-4		(USMA to provide text)		
4075	4th	NS-1	8.5" x 11"	GR1-4		(USMA to provide text)		
4077	4th	FEM-1	8.5" x 8"	GR1-4		(Fire Exit Stair S In Case of fire D Not Use Elevator I Stair		

SHEET # GR1-4

Sign Re	Floo	Sign Ty	Size W	Sheet # ←	Message	Remarks	Date Insta
4079	4th	RID-1	8.5" X 3"	GR1-4	C407 EMER. ELECTRICAL		
4080	4th	RID-1	8.5" X 3"	GR1-4	B453 ELECTRIC		
4081	4th	RID-1	8.5" X 3"	GR1-4	B454 EMER. ELEC.		
4083	4th	NS-1	8.5" x 11"	GR1-4	(USMA to provide text)		
4085	4th	PRW-1	8.5" X 18"	GR1-4	C440 GYMNASIUM		
4086	4th	NS-1	8.5" x 11" 8.5" x 11" 8.5" x 11"	GR1-4	(USMA to provide text)		
4087	4th	NS-1	8.5" x 11"	GR1-4	(USMA to provide text)		
4088	4th	NS-1	8.5" x 11"	GR1-4	(USMA to provide text)		

SHEET # GR1-4

Sign Re	Floo	Sign Ty	Size W	Sheet #	←	Message	Remarks	Date Insta
4092	4th	RID-1	8.5" X 3"	GR1-4		B420 NORTH MECHANICAL ROOM		
4094	4th	NS-1	8.5" x 11"	GR1-4		(USMA to provide text)		
4095	4th	EDS-1	12" x 12"	GR1-4		LEVEL 4 STAIR 3 LEVEL S B-6 NO ROOF ACCESS		
					←	EXIT THIS LEVEL		
4096	4th	EDS-1	12" x 12"	GR1-4		LEVEL 4 STAIR 3 LEVEL S B-6 NO ROOF ACCESS		
					←	EXIT THIS LEVEL		
4097	4th	SF-1	8.5" x 2"	GR1-4		STAIR 3		
4102	4th	NS-1	8.5" x 11"	GR1-4		(USMA to provide text)		
4105	4th	NENT-1	8.5" x 8"	GR1-4		(Do Not Enter Symbol) No Entry		

SHEET # GR1-5

Sign Re	Floo	Sign Ty	Size W	Sheet #	←	Message	Remarks	Date Insta
5001	5th	EDS-1	12" x 12"	GR1-5		LEVEL 5 STAIR 1 LEVEL S 2-6 NO ROOF ACCESS		
					←	EXIT THIS LEVEL		
5002	5th	EDS-1	12" x 12"	GR1-5		LEVEL 5 STAIR 2 LEVEL S 2-5 NO ROOF ACCESS		
					→	EXIT THIS LEVEL		
5003	5th	SF-1	8.5" x 2"	GR1-5		STAIR 3		
5004	5th	EDS-1	12" x 12"	GR1-5		LEVEL 5 STAIR 3 LEVEL S B-6 NO ROOF ACCESS		
					↓	EXIT LEVEL 4		
5006	5th	FEM-1	8.5" x 8"	GR1-5		(Fire Exit Stair S In Case of fire D Not Use Elevator I Stair		
5007	5th	NS-1	8.5" x 11"	GR1-5		BALCONY SPACE IS LIMITED TO ABLE- BODIED MILITARY PERSONNEL ONLY		
5008	5th	NS-1	8.5" x 11" 8.5" x 11"	GR1-5		BALCONY SPACE IS LIMITED TO ABLE- BODIED MILITARY PERSONNEL ONLY		

SHEET # GR1-5

Sign Re	Floo	Sign Ty	Size W	Sheet #	Message	Remarks	Date Insta
5009	5th	SF-1		GR1-5	STAIR 2		
5010	5th	SF-1		GR1-5	STAIR 1		
5012	5th	RID-1	8.5" X 3"	GR1-5	B556 ELEVATOR MACHINE ROOM		

SHEET # GR1-6

Sign Re	Floo	Sign Ty	Size W	Sheet #	←	Message	Remarks	Date Insta
6001	6th	EDS-1	12" x 12"	GR1-6		LEVEL 6 STAIR 1 LEVEL S 2-6 NO ROOF ACCESS		
					↓	EXIT LEVEL 5		
6002	6th	SF-1	8.5" x 2"	GR1-6		STAIR 1		
6004	6th	RID-1	8.5" X 3"	GR1-6		C640 SOUTH MECHANICAL ROOM		
6005	6th	RID-1	8.5" X 3"	GR1-6		B556 ELECTRIC ROOM		
6006	6th	RID-1	8.5" X 3"	GR1-6		C622 EXHAUST PLENUM		
6007	6th	EDS-1	12" x 12"	GR1-6		LEVEL 6 STAIR 3 LEVEL S B-6 NO ROOF ACCESS		
					↓	EXIT LEVEL 4		
6008	6th	SF-1	8.5" x 2"	GR1-6		STAIR 3		

SHEET # GR1-6

Sign Re	Floo	Sign Ty	Size W	Sheet # ←	Message	Remarks	Date Insta
6010	6th	RID-1	8.5" X 3"	GR1-6	C658 PUMP ROOM		
6011	6th	RID-1	8.5" X 3"	GR1-6	C658 PUMP ROOM		
6012	6th	RID-1	8.5" X 3"	GR1-6	C652 EXHAUST PLENUM		
6013	6th	RID-1	8.5" X 3"	GR1-6	C640 SOUTH MECHANICAL ROOM		
6016	6th	RID-1	8.5" X 3"	GR1-6	C651 EXHAUST PLENUM		

SHEET # GR1-7

Sign	Re	Floo	Sign Ty	Size W	Sheet #	←	Message	Remarks	Date Insta
0001		SITE	EXT-2	12" x 14"	GR1-7		ARVIN CPDC NO ENTRY (DO NOT ENTER SYMBOL) Emergency Exit On Use Main Entrance		
0002		SITE	EXT-2	12" x 14"	GR1-7		ARVIN CPDC NO ENTRY (DO NOT ENTER SYMBOL) Emergency Exit On Use Main Entrance		
0003		SITE	EXT-1	12" x 15"	GR1-7		(USMA SHIELD) ARVIN CPDC 727		
0004		SITE	HD-2	12" x 15"	GR1-7		Hours of Operatio (Times TBD) Military or Civil Card Required ARVIN CPCD 727		
0005		SITE	EBI-3	204" x 33"	GR1-7		ARVIN CADET PHYSICAL DEVELOPMENT CENTER		
0008		SITE	RS-1	12" x 18"	GR1-7		RESERVED USMA to provide t		

SHEET # GR1-7

Sign Re	Floo	Sign Ty	Size W	Sheet # ←	Message	Remarks	Date Insta
0009	SITE	RS-1	12" x 18"	GR1-7	RESERVED USMA to provide t		
0010	SITE	EXT-3	12" x 15"	GR1-7	ARVIN CPDC LOADING DOCK		
0011	SITE	EXT-1	12" x 15"	GR1-7	(USMA SHIELD) ARVIN CPDC 727		
0013	SITE	HD-2	12" x 15"	GR1-7	Hours of Operatio (Times TBD) Military or Civil Card Required ARVIN CPCD 727		
0014	SITE	EBI-1	119" x 19"	GR1-7	ARVIN CADET PHYSICAL DEVELOPMENT CENTER		
0015	SITE	EXT-2	12" x 14"	GR1-7	ARVIN CPDC NO ENTRY (DO NOT ENTER SYMBOL) Emergency Exit On Use Main Entrance		

SHEET # GR1-7

Sign Re	Floo	Sign Ty	Size W	Sheet # ←	Message	Remarks	Date Insta
0016	SITE	EXT-2	12" x 14"	GR1-7	ARVIN CPDC NO ENTRY (DO NOT ENTER SYMBOL) Emergency Exit On Use Main Entrance		
0017	SITE	EXT-2	12" x 14"	GR1-7	ARVIN CPDC NO ENTRY (DO NOT ENTER SYMBOL) Emergency Exit On Use Main Entrance		
0018	SITE	EBI-2	119" x 19"	GR1-7	ARVIN CADET PHYSICAL DEVELOPMENT CENTER		
0019	SITE	EXT-1	12" x 15"	GR1-7	(USMA SHIELD) ARVIN CPDC 727		
0020	SITE	RS-1	12" x 18"	GR1-7	RESERVED USMA to provide t		
0021	SITE	RS-1	12" x 18"	GR1-7	RESERVED USMA to provide t		
0022	SITE	RS-1	12" x 18"	GR1-7	RESERVED USMA to provide t		

SHEET # GR1-7

Sign Re	Floo	Sign Ty	Size W	Sheet # ←	Message	Remarks	Date Insta
0023	SITE	RS-1	12" x 18"	GR1-7	RESERVED USMA to provide t		
0024	SITE	RID-1	8.5" X 3"	GR1-7	FILL LINE		
0025	SITE	NS-1	8.5" x 11"	GR1-7	(USMA to provide text)		
0027	SITE	RS-1	12" x 18"	GR1-7	RESERVED USMA to provide t		
0028	SITE	RS-1	12" x 18"	GR1-7	RESERVED USMA to provide t		
0029	SITE	RS-1	12" x 18"	GR1-7	RESERVED USMA to provide t		
0030	SITE	RS-1	12" x 18"	GR1-7	RESERVED USMA to provide t		

SECTION 10500

LOCKERS

PART 1 GENERAL

1.1 SUBMITTALS

Government approval is required for submittals with a "GA" designation; submittals having an "FIO" designation are for information only. The following shall be submitted in accordance with Section 01330 SUBMITTAL PROCEDURES:

SD-01 Data

Lockers; GA.

Manufacturer's technical data and catalog cuts including installation and cleaning instructions.

SD-04 Drawings

Lockers; GA.

Drawings showing plans, elevations, details of construction, hardware, reinforcing, fittings, mountings, and anchorings.

SD-14 Samples

Lockers; GA.

Manufacturer's standard color charts and color samples.

PART 2 PRODUCTS

2.1 ACCEPTABLE MANUFACTURERS/TYPES

Heavy-Duty Metal Lockers: Provide one of the following products, or Architect approved equal that meets or exceeds specified requirements:

1. All American Series; DeBourgh Manufacturing Company.
2. AMP-1004 Bulldog Lockers; Art Metal Products.
3. Heavy Duty, All Welded Lockers; List Industries.

2.2 HEAVY DUTY, FULLY WELDED LOCKER FABRICATION

2.2.1 General

Provide locker configurations as indicated on Drawings and as specified. Unless otherwise indicated, provide the following configuration:

1. Standard Lockers: Single Tier: 9 in. wide by 18 in. deep by 60 in. overall.

2.2.2 Construction

Fabricate heavy duty lockers fully welded with no bolts, screws, or rivets, and as follows:

1. Material: Mild annealed cold rolled and leveled steel, free from surface imperfections. Bolts shall be cadmium plated or subject to other rust-proofing treatment.

2. Tops, Bottoms, Shelves, End Panels and Tier Dividers: Minimum 16 gage steel, flanged to give double thickness of metal at back vertical corners.

3. Backs: Minimum 18 gage steel.

4. Doors: Doors shall be fabricated of solid 14 gage single piece cold-rolled steel with double bends on vertical sides and a single bend on horizontal sides. Provide traditional six louvers at top and bottom of door allowing 7% minimum ventilation

2.2.3 Latching Mechanism

Provide 3-point, 3-sided Cremone latching mechanisms, with recessed padlock ready-latch operator. Pad locks are NIC.

2.2.4 Hinges

Provide manufacturer's standard 3 in. five-knuckle, 14 gage fast pin, heavy-duty butt hinges, fully welded to locker frame and to door frame. Provide three hinges per door.

2.2.5 Miscellaneous Items

Coat Hooks: Equip each compartment with one double-prong ceiling hook and two single-prong wall hooks. Provide hooks cadmium plated with ball points. Attach each hook with two bolts or rivets.

Number Plates: Provide manufacturer's standard number plates, modified to be totally free of manufacturer's name or advertising. Numbering shall be as directed by the Contracting Officer.

Base: Lockers shall sit on concrete or masonry subbase with wood nailer-inserts, provided by other trades. Provide all necessary reinforcement, bracing, and anchorage required to accommodate the type of installation detailed.

Trim: Provide finishing strips as required to maintain flush surface of lockers into adjoining surfaces.

Sloping Tops: Provide manufacturer's standard sloping tops with mitered

corners at all lockers.

2.3 METAL LOCKER FINISHES

Finish: Chemically pretreat metal with degreasing and phosphatizing process. Apply electrostatically sprayed, 300°F. baked-on enamel finish to all surfaces, exposed and concealed, except number plates and nonferrous metal parts. Finish shall be able to withstand a rigid hammer test without chipping or flaking.

1. Colors: As indicated in Section 09915, COLOR SCHEDULE.

PART 3 EXECUTION

3.1 INSTALLATION

Install lockers in strict accordance with manufacturer's published instructions. Install plumb and true, rigidly anchored to surrounding construction with correct fittings of type(s) approved by Contracting Officer. Adjust hardware for ease of movement and proper operation.

Install trim, tops, and metal filler panels and end panels, using concealed fasteners. Provide flush, hairline joints against adjacent finishes.

Touch up damaged finishes. Replace units whose finish cannot be put in first-class appearance, as directed by Contracting Officer.

-- End of Section --

SECTION 10520

FIRE EXTINGUISHERS, CABINETS AND ACCESSORIES

PART 1 GENERAL

1.1 REFERENCES

The publications listed below form a part of this specification to the extent referenced. The publications are referred to in the text by basic designation only.

National Fire Protection Association (NFPA):

NFPA 10 Portable Fire Extinguisher

1.2 SUBMITTALS

Government approval is required for submittals with a "GA" designation; submittals having an "FIO" designation are for information only. The following shall be submitted in accordance with Section 01330 SUBMITTAL PROCEDURES:

SD-01 Data

Fire Extinguisher Cabinets; GA Fire Extinguishers; GA.

For fire extinguisher cabinets include roughing-in dimensions, and details showing mounting methods, relationships to surrounding construction, door hardware, cabinet type and materials, trim style and door construction, style and materials.

For fire extinguishers include manufacturer's standard printed product data.

SD-14 Samples

Finish Metals; GA

Submit samples, 6 in. square, of stainless steel finish. Prepare samples on metal of same gage as metal to be used in the work. Where normal variations are to be expected, include two or more units in each sample showing the limits of such variations.

1.3 QUALITY ASSURANCE

Provide fire extinguisher cabinets, fire extinguishers, and accessories by one manufacturer, unless otherwise acceptable to Contracting Officer.

1.3.1 UL-Listed Products:

Provide new portable fire extinguishers which are UL-listed and bear UL "Listing Mark" for type, rating, and classification of extinguisher indicated.

1.3.2 FM Listed Products:

Provide new portable fire extinguishers which are approved by Factory Mutual Research Corporation for type, rating, and classification of extinguisher indicated and carry appropriate FM marking.

1.3.3 Source Limitations:

Obtain fire extinguishers and cabinets through one source from a single manufacturer.

1.3.4 NFPA Compliance:

Fabricate and label fire extinguishers to comply with NFPA 10

PART 2 PRODUCTS

2.1 ACCEPTABLE MANUFACTURERS

Manufacturer: Subject to compliance with requirements, provide products of one of the following:

1. J.L. Industries.
2. Larsen's Mfg. Co.
3. Muckle Manufacturing, Division of Technico, Inc.
4. Profile International, Inc.

2.2 FIRE EXTINGUISHERS

General: Provide the following type:

1. Multi-Purpose Dry Chemical Type (4A-60BC-FE): UL-rated 4-A:60-B:C, 10 lb. nominal capacity, in enameled steel container, for Class A, Class B, and Class C fires. Fire extinguishers will be 5 inch diameter x 20 inch high.

Quantity: Provide one fire extinguisher per cabinet, and at all other locations shown on Drawings.

2.3 MOUNTING BRACKETS

Provide manufacturer's standard bracket designed to prevent accidental dislodgement of extinguisher, of proper size for type and capacity of extinguisher indicated, in manufacturer's standard plated finish.

1. Provide brackets for extinguishers not located in cabinets.

2.4 FIRE EXTINGUISHER CABINETS

2.4.1 General:

Provide fire extinguisher cabinets where indicated, of suitable size for housing fire extinguishers of types and capacities indicated.

1. Recessed Cabinets: Provide units equal to Larsen Model No. SS-2409-R2; except provide standard or custom Type 316 stainless steel tubs at Room Y040 Instructional Pool and Room Z020 Intramural Pool.
2. Semi-Recessed Cabinets: Provide units equal to Larsen Model No. SS-2409-6R.
3. Fire-Rated Semi-Recessed Cabinets: Provide units equal to Larsen Model No. FS-SS-2409-6R.

2.4.2 Construction:

Manufacturer's standard baked enamel tub construction (except provide custom Type 316 stainless steel box at Room Y040 Instructional Pool and Room Z020 Intramural Pool), with trim, frame, door and hardware to suit cabinet type, trim style, and door style specified. Weld all joints and grind smooth. Miter and weld perimeter door frames.

2.4.3 Cabinet Type:

Suitable for mounting conditions indicated, of the following types:

1. Recessed: Manufacturer's standard enameled steel cabinet box (except provide custom Type 316 stainless steel cabinet box at Room Y040 Instructional Pool and Room Z020 Intramural Pool), fully recessed in walls of sufficient depth to suit size of fire extinguisher and style of trim indicated.

2. Semi-Recessed: Manufacturer's standard enameled steel cabinet box (tub) partially recessed in walls of shallow depth.

3. Fire-Rated Semi-Recessed: Provide manufacturer's standard UL rated semi-recessed cabinet.

2.4.4 Trim-Style:

Provide flat trim on recessed cabinets, and rolled edge trim at semi-recessed cabinet.

1. Flat Trim on Recessed Cabinets: Square edges with backbend of 5/16 inch.
2. Rolled-Edge Trim on Semi-recessed Cabinets: Rounded edges with backbend depth of 2-1/2 inches
3. Trim Metal: Stainless steel.

2.4.5 Door Material and Construction:

Manufacturer's standard door construction, of material indicated, coordinated with cabinet types and trim styles selected.

1. Stainless Steel: Manufacturer's standard stainless steel door construction.

2.4.6 Door Style:

Manufacturer's standard design as indicated below and on Drawing.

1. Solid Panel: Full flush opaque panel of stainless steel. Provide silk screen lettering vertical.

2.4.7 Door Hardware:

Provide manufacturer's standard door operating hardware of proper type for cabinet type, trim style, and door material and style indicated. Provide either lever handle with cam action latch, or door pull, exposed or concealed, and friction latch. Provide continuous type hinge permitting door to open 180 degrees.

2.5 FACTORY FINISHING OF FIRE EXTINGUISHER CABINETS

Comply with NAAMM Ref. 1 for recommendations for applying and designating finishes.

Protect mechanical finishes on exposed surfaces from damage by applying a strippable, temporary protective covering before shipping.

Appearance of Finished Work: Variations in appearance of abutting or adjacent pieces are acceptable if they are within one-half of the range of approved Samples. Noticeable variations in the same piece are not acceptable. Variations in appearance of other components are acceptable if they are within the range of approved Samples and are assembled or installed to minimize contrast.

Stainless Steel Finish: No. 4 polished finish. Furnish with paper masking to protect finish.

PART 3 EXECUTION

3.1 INSTALLATION

Install items included in this section in locations and at mounting heights indicated, or if not indicated, at heights to comply with applicable regulations of governing authorities.

1. Prepare recesses in walls for fire extinguisher cabinets as required by type and size of cabinet and style of trim and to comply with manufacturer's instructions.

2. Securely fasten mounting brackets and fire extinguisher cabinets to structure, square and plumb, to comply with manufacturer's instructions.

3.2 IDENTIFICATION

Identify fire extinguisher in cabinet with lettering spelling "FIRE EXTINGUISHER" painted on door by silk-screen process. Provide lettering on door as indicated, or if not indicated, as selected by Contracting Officer from manufacturer's standard letter sizes, styles, colors and layouts.

Identify bracket-mounted extinguishers with red letter decals spelling "FIRE EXTINGUISHER" applied to wall surface. Letter size, style and location as selected by Contracting Officer.

-- End of Section --

SECTION 10605

WIRE MESH PARTITIONS

PART 1 GENERAL

1.1 SUBMITTALS

Government approval is required for submittals with a "GA" designation; submittals having an "FIO" designation are for information only. The following shall be submitted in accordance with Section 01330 SUBMITTAL PROCEDURES:

SD-01 Data

Product Data; GA.

Submit complete manufacturer's product data of all work of this Section, consisting of complete product description and specifications, catalog cuts, and other descriptive data required for complete product and product use information. Specify patterns, material weights, finishes and galvanizing method.

SD-04 Drawings

Shop Drawings; GA

Submit complete shop drawings showing pertinent details of construction and installation. Drawings shall include framing, fabrication, erection, and anchorage details.

SD-14

Color Samples; GA

Submit samples of manufacturer's standard paint colors.

PART 2 PRODUCTS

2.1 ACCEPTABLE MANUFACTURERS

Provide products of one of the following manufacturer's which meet or exceed the requirements of these specifications, or approved equal:

1. Acorn Wire and Iron Works
2. Indiana Wire Products, Inc.
3. Kentucky Metal Products
4. Miller Wire Works

2.2 MATERIALS AND PRODUCTS

2.2.1 General:

Provide floor mounted and floor supported wire mesh partition system where indicated. Wire mesh partitions shall extend from the floor to 2 inches below finished ceiling. Provide all additional bracing and framing, including overhead work, required to properly supported system. Include required doors with required hardware and locking or latching arrangements.

Do not provide components less than sizes indicated. Use larger size components if recommended by manufacturer of partition components.

2.2.2 Mesh:

10 gage crimped steel wire woven into 1-1/2 in. mesh, securely clinched to frame members.

2.2.3 Frames:

Provide the following minimum sizes:

1. Verticals: 1-1/4 in. x 5/8 in. cold-rolled steel C-Section channels with 1/4 in. bolt holes 15 in. o.c.

2. Horizontals: 1 in. x 1/2 in. x 1/8 in. cold-rolled steel channels, mortise and tenoned to vertical members.

3. Horizontal Reinforcing Members: 1 in. x 1/2 in. x 1/8 in. cold-rolled steel channel with wire woven through, or two 1 in. x 3/8 in. channels bolted or riveted to each side of mesh, and secured to vertical members. Provide number of horizontal reinforcing members to suit panel height, as recommended by partition manufacturer.

2.2.4 Stiffening Bars:

Manufacturer's standard flat-bar stiffening posts between abutting panel frames.

2.2.5 Corner Posts:

1-3/4 in. x 1-3/4 in. x 1/8 in. angles with 1/4 in. bolt holes to align with bolt holes in vertical frame members, and floor plate. For corners other than 90°, provide manufacturer's standard adjustable assembly.

2.2.6 Line Posts:

Where partition runs exceed 20 ft. without connection to overhead framing, or intersection with side partitions, provide manufacturer's standard line posts and base plates, located at intervals to ensure partition stability.

2.2.7 Capping Bars:

2-1/4 in. x 1 in. cold-rolled steel channels, secured to top framing

channel with 1/4 in. U-bolts, spaced not more than 28 in. o.c.

2.2.8 Floor Shoes:

Cast iron or high ductile iron sized to suit vertical framing and to provide 3 in. clear space between finished floor and bottom horizontal frame members.

2.2.9 Hinged Door:

Manufacturer's standard door frame constructed of welded angles, flat bars, and channels with 1-1/2 pair of butt hinges welded to door and frame. Align bottom of door with bottom of adjacent panels. Provide one door for each compartment, and elsewhere as required by the Documents.

2.2.10 Locks:

Provide manufacturer's standard hasp and fittings to receive padlock by Owner at all locations except as specified below.

Two doors at the mesh infill in the counter shutter at the CS Equipment room shall receive a mortise lockset with recessed handle on interior side and key cylinder on corridor side. Cylinder shall be Best cylinder as specified in section 08700 BUILDERS' HARDWARE.

2.2.11 Miscellaneous Hardware:

Provide all bolts, fasteners, field bracing, and attachment devices required for compete installation. Provide tamperproof heads on all exposed to view attachment devices.

2.3 FABRICATION

Fabricate work to be truly straight, plumb, level and square.

Provide work to sizes, shapes, and profiles indicated on approved shop drawings.

2.4 FINISHES

Factory Applied Enamel: Provide manufacturer's standard shop applied enamel, color as indicated in Section 09915, COLOR SCHEDULE.

PART 3 EXECUTION

3.1 INSPECTION

The Installer/Erector shall examine substrates, supports, and conditions under which this work is to be installed and notify Contractor, in writing, of conditions detrimental to the proper completion of the work. Do not proceed with work until unsatisfactory conditions are corrected. Beginning work means Installer accepts substrates and conditions.

3.2 PREPARATION

Strictly comply with manufacturer's instructions and recommendations, except where more restrictive requirements are specified in this Section.

3.3 INSTALLATION/ERECTION

Erect partitions plumb, rigid, properly aligned, and securely fastened in place. Comply with final shop drawings for proper layout of the work. Provide any additional field bracing as shown or necessary for a rigid, secure installation.

3.4 TOLERANCES

The following allowable installed tolerances are allowable variations from locations and dimensions indicated by the Contract Document and shall not be added to allowable tolerances indicated for other work.

1. Allowable Variation from True Plumb: ± 1/4 in. in 20 ft. - 0 in.
2. Allowable Variation from True Line: ± 1/4 in. in 20 ft. - 0 in.

3.5 ADJUSTING, CLEANING, TOUCH-UP, AND PROTECTION

Adjust operating parts to work easily, smoothly, and correctly.

Touch-up damaged coatings and finishes to eliminate evidence of repair.

Repair minor damage to eliminate all evidence of repair. Clean exposed surfaces using non-abrasive materials and methods recommended by manufacturer of material or product being cleaned. Remove and replace work that cannot be successfully cleaned or repaired.

Provide temporary protection to ensure work being without damage or deterioration at time of final acceptance. Remove protections and reclean as necessary immediately before final acceptance.

-- End of Section --

SECTION 10800

TOILET ACCESSORIES

PART 1 GENERAL

1.1 SUBMITTALS

Government approval is required for submittals with a "GA" designation, submittals having an "FIO" designation are for information only. The following shall be submitted in accordance with Section 01330 SUBMITTAL PROCEDURES:

SD-01 Data

Finishes; GA. Accessory Items; GA.

Manufacturer's descriptive data and catalog cuts indicating materials of construction, fasteners proposed for use for each type of wall construction, mounting instructions, operation instructions, and cleaning instructions.

SD-14 Samples

Finishes; GA. Accessory Items; GA.

One sample of each accessory proposed for use. Approved samples may be incorporated into the finished work, provided they are identified and their locations noted.

SD-19 Operation and Maintenance Manuals

Electric Hand Dryer; GA.

Four complete copies of maintenance instructions listing routine maintenance procedures and possible breakdowns and repairs. Instructions shall include simplified wiring and control diagrams and other information necessary for unit maintenance.

1.2 DELIVERY, STORAGE, AND HANDLING

Toilet accessories shall be wrapped for shipment and storage, delivered to the jobsite in manufacturer's original packaging, and stored in a clean, dry area protected from construction damage and vandalism.

1.3 WARRANTY

Manufacturer's standard performance guarantees or warranties that extend beyond a 1 year period shall be provided.

PART 2 PRODUCTS

2.1 MANUFACTURED UNITS

Toilet accessories shall be provided as required by the Contract Documents. Each accessory item shall be complete with the necessary mounting plates and shall be of sturdy construction with corrosion resistant surface.

2.1.1 Anchors and Fasteners

Anchors and fasteners shall be capable of developing a restraining force commensurate with the strength of the accessory to be mounted and shall be suited for use with the supporting construction. Exposed fasteners shall be of tamperproof design and shall be finished to match the accessory.

2.1.2 Finishes

Except where noted otherwise, finishes on metal shall be provided as follows:

Metal	Finish
Stainless steel	No. 4 satin finish
Carbon steel, copper alloy, and brass	Chromium plated, bright

2.2 ACCESSORY ITEMS

Accessory items shall conform to the requirements below. Accessories shall be manufactured by Bobrick Washroom Equipment Co., Inc., American Specialties, Inc., Tubular Specialties, or equal. Catalog numbers listed below are those of Bobrick Washroom Equipments Co., Inc. (Bobrick) and establish the required quality and design and are not to limit competition. Manufacturer's names shall not be visible on exposed surfaces in the completed work. All keyed locks shall be keyed alike.

The following schedule of items is to establish type and quality. Carefully review the documents for other toilet accessories and to establish quantities, locations and mounting heights of the various accessories required. In the event location or mounting heights are not indicated, they shall be as directed by the Contracting Officer.

1. Recessed Paper Towel Dispenser and Waste Receptacle: Bobrick B-3944. Provide as required, but not less than one at each toilet room.

2. Surface Mounted Soap Dispenser: Bobrick B-2111. Provide as required, but not less than one for first lavatory/sink in each toilet room and one additional for each additional two lavatories/sinks in each toilet room.

3. Double-Roll Toilet Tissue Dispenser: Bobrick B-2740. Provide as

required, but not less than one for each toilet.

4. Recessed Napkin/Tampon Vendor: Bobrick B-3500. Provide as required, but not less than one in each women's toilet room.

5. Partition Mounted Sanitary Napkin Disposal (serves two toilet compartments): Bobrick B-354. Provide as required, but not less than one in partition between every two water closets/toilets in each women's toilet room. Where an odd number of water closets/toilets existing in each women's toilet room and at accessible (handicap) stalls provide recessed model below at end toilet stall.

6. Recessed Sanitary Napkin Disposal: Bobrick B-353. Provide as required, but not less than one where an odd number of water closets/toilets existing in each women's toilet room at end toilet stall, at accessible (handicap) stalls in each women's toilet room, and at each water closet/toilet not able to have access to partition mounted type in each women's toilet room.

7. Surface Mounted Hair Dryer: Bobrick B-731, 208 V AC. Provide as required but not less than one for each shower area/room. Provide electrical power to each in accordance with the requirements of section 16415 ELECTRICAL WORK, INTERIOR for proper operation.

8. Grab Bars: Bobrick B-6806.99 series in lengths required. Provide as required, but not less than one 36 inch length and one 42 inch length at each accessible (handicap) water closet/toilet in each toilet room.

9. Mirror with Stainless Steel Angle Frame and Shelf: Bobrick B-292 1830. Provide as required, but not less than one at each sink/lavatory.

10. Solid Phenolic Folding Shower Seat: Bobrick B-5181 (left and right hand). Provide as required, but not less than one at each accessible (handicap) shower stall.

11. Maximum Security Surface Mounted Soap Dish: Bobrick B-973. Provide as required, but not less than one for each shower head.

12. Extra-Heavy-Duty Shower Curtain Rod, Curtain and Curtain Hooks: Bobrick B-6047 rod in lengths required, Bobrick 204-2 curtain for up to 36 inch rod lengths, Bobrick B-204-3 curtain for rod lengths over 36 inches, and Bobrick B-204-1 curtain hooks in number required for each curtain grommet. Provide as required, but not less than one at each individual shower with rod length to fit opening with shower curtain and hooks required to fit opening.

13. Surface Mounted Stainless Steel Mop and Broom Holder: Bobrick B-223x24. Provide one at each service sink/mop sink and the like.

14. Heavy Duty Robe Hook: Bobrick B-211. Provide as required, but not less than one for each shower head.

2.3 SWIMSUIT WATER EXTRACTOR

Provide swimsuit water extractors at locations indicated. Swimsuit extractors shall be the "Suitmate" as manufactured by the Extractor Corporation, South Elgin, IL 60177, or approved equal.

Swimsuit extractor shall be a device that removes up to 95% of water from swimsuits in 10 seconds or less, using spin cycle without heat.

Swimsuit water extractor shall have the following specifications:

1. Construction: Stainless steel and plastic.
2. Manual self-start and self-stop.
3. No exposed moving parts.
4. Built-in ground-fault circuit interrupter.

PART 3 EXECUTION

3.1 INSTALLATION

Toilet Accessories: Toilet accessories shall be securely fastened to the supporting construction in accordance with manufacturer's approved or recommended instructions. Units shall be installed level and aligned with surrounding surfaces and work. Provide sealant conforming to the requirements of section 07900 JOINT SEALING around perimeter of accessories to close cavities or gaps formed by changes in surface materials.

Swimsuit Water Extractor: Swimsuit water extractors shall be securely fastened to the supporting construction in accordance with manufacturer's approved or recommended instructions. Units shall be installed level and aligned with surrounding surfaces and work. Provide sealant conforming to the requirements of section 07900 JOINT SEALING around perimeter of swimsuit water extractors to close cavities or gaps formed by changes in surface materials. Provide electrical power to each in accordance with the requirements of section 16415 ELECTRICAL WORK, INTERIOR for proper operation.

3.2 CLEANING

Material shall be cleaned in accordance with manufacturer's recommendations. Alkaline or abrasive agents shall not be used. Do not damage surfaces.

-- End of Section --

SECTION 11211

PUMPS: WATER, CENTRIFUGAL AND FUEL OIL TRANSFER

PART 1 GENERAL

1.1 REFERENCES

The publications listed below form a part of this specification to the extent referenced. The publications are referred to in the text by basic designation only.

AMERICAN SOCIETY FOR TESTING AND MATERIALS (ASTM)

ASTM A 123	(1989a) Zinc (Hot-Dip Galvanized) Coatings on Iron and Steel Products
ASTM A 307	(1994) Carbon Steel Bolts and Studs, 60 000 PSI Tensile Strength

AMERICAN SOCIETY OF MECHANICAL ENGINEERS (ASME)

ASME B1.1	(1989) Unified Inch Screw Threads (UN and UNR Thread Form)
ASME B16.1	(1989) Cast Iron Pipe Flanges and Flanged Fittings
ASME B16.5	(1988; Errata Oct 1988; B16.5a) Pipe Flanges and Flanged Fittings
ASME B40.1	(1991) Gauges - Pressure Indicating Dial Type - Elastic Element

HYDRAULIC INSTITUTE (HI)

HI-01	(1983) Standards for Centrifugal, Rotary & Reciprocating Pumps

NATIONAL ELECTRICAL MANUFACTURERS ASSOCIATION (NEMA)

NEMA MG 1	(1993; Rev 1-1993) Motors and Generators

NATIONAL FIRE PROTECTION ASSOCIATION (NFPA)

NFPA 20	(1993) Centrifugal Fire Pumps
NFPA 70	(1993) National Electrical Code

STEEL STRUCTURES PAINTING COUNCIL (SSPC)

SSPC Paint 21	(1991) White or Colored Silicone Alkyd Paint
SSPC Paint 25	(1991) Red Iron Oxide, Zinc Oxide, Raw Linseed Oil and Alkyd Primer (without Lead and Chromate Pigments

1.2 GENERAL REQUIREMENTS

1.2.1 Standard Products

Material and equipment shall be the standard products of a manufacturer regularly engaged in the manufacture of such products and shall essentially duplicate equipment that has been in satisfactory waterworks operation at least 2 years prior to bid opening. Equipment shall be supported by a service organization that is, in the opinion of the Contracting Officer, reasonably convenient to the jobsite. Pumps and motors of the same types shall each be the product of one manufacturer.

1.2.2 Description

The pumps shall be horizontal centrifugal water pumps of the types indicated and specified. The single driving units for the pumps shall be electric motors as indicated and specified.

1.2.3 Governing Requirements

Fire pumps and appurtenances shall conform in all respects to NFPA 20.

1.2.3.1 Existing Fire Pump

There is an existing fire pump in Building Segment A. The characteristics are as follows: 2,000 GPM; 65 PSI Inlet; 323 TDH; 250 HP; 60 HZ, 3-phase.

1.2.4 Safety Requirements

Gears, couplings, projecting set-screws, keys, and other rotating parts, so located that any person can come in close proximity thereto, shall be fully enclosed or properly guarded.

1.2.5 Nameplates

Pumps and motors shall have a standard nameplate securely affixed in a conspicuous place showing the manufacturer's name, address, type or style, model, serial number, and catalog number. In addition, the nameplate for each pump shall show the capacity in gpm at rated speed in rpm and head in feet of water. Nameplate for each electric motor shall show at least the minimum information required by 10.38 NEMA MG 1. Such other information as the manufacturer may consider necessary to complete identification shall be shown on the nameplate.

1.2.6 Electrical Work

Electrical motor driven equipment specified herein shall be provided

complete with motors, motor starters, and controls. Electric equipment and wiring shall be in accordance with Section 16415 ELECTRICAL WORK, INTERIOR. Electrical characteristics shall be as indicated. Equipment for control of automatic fire pumps shall be in accordance with NFPA 20. Motor starters shall be provided complete with properly sized thermal overload protection in each phase and other appurtenances necessary for the motor control specified. Each motor shall be of sufficient capacity to drive the equipment at the specified capacity without exceeding the nameplate rating of the motor when operating at proper electrical system voltage and frequency. Manual or automatic control and protective or signal devices required for the operation herein specified and any control wiring required for controls and devices but not shown on electrical plans shall be provided under this section of the specifications.

1.2.7 Selection Criteria

Pumps shall be designed using hydraulic criteria based upon actual model developmental test data. Pumps shall be selected at a point within the maximum efficiency for a given impeller casing combination. Deviations within 3 percent of maximum efficiency are permissible, provided the lesser efficiency is not less than the scheduled efficiency. Pumps having impeller diameters larger than 90 percent of the published maximum diameter of the casing or less than 15 percent larger than the published minimum diameter of the casing will be rejected. Acceptable maximum impeller diameter calculations shall not be based on percentage of impeller diameter range for a given casing.

1.2.8 Conformance With Agency Requirements

Where materials or equipment are specified to be an approved type, the seal or label of approval from a nationally recognized testing agency, adequately equipped and competent to perform such services, shall be attached thereto. A written certificate from the testing agency shall accompany the materials or equipment and shall be submitted to the Contracting Officer stating that the items have been tested and that they conform to the applicable requirements of the specifications and to the standards listed herein. The certificate shall indicate the methods of testing used by the testing agency. In lieu of a certificate from a testing agency, published catalog specification data, accompanied by the manufacturer's certified statement to the effect that the items are in accordance with the applicable requirements of the specifications and the referenced standards, will be considered by the Contracting Officer and may be acceptable as evidence that the items conform with agency requirements.

1.2.9 Verification of Dimensions

The Contractor shall become familiar with all details of the work, verify all dimensions in the field and shall advise the Contracting Officer of any discrepancy before performing the work.

1.2.10 Factory Tests

Pumps shall be tested by the manufacturer or a nationally recognized testing agency in compliance with Hydraulic Institute Standards. Where two

or more identical pumps are specified, only one representative pump shall be tested. Certified test results shall be submitted to the Contracting Officer.

1.2.11 Testing of Existing Pumps

Existing pumps shall be tested for performance and functionality prior to any work commencing that is associated with that system. These test results and data shall be submitted to the Contracting Officer for record.

1.3 SUBMITTALS

Government approval is required for submittals with a "GA" designation; submittals having an "FIO" designation are for information only. The following shall be submitted in accordance with Section 01330 SUBMITTAL PROCEDURES:

SD-01 Data

Materials and Equipment; GA.

Manufacturer's descriptive data and technical literature, performance charts and curves for all impeller sizes for a given casing, catalog cuts, and installation instructions. Spare parts data for each different item of material and equipment specified, after approval of the detail drawings and not later than 2 months prior to the date of beneficial occupancy. Data shall include a complete list of parts and supplies, with current unit prices and source of supply.

SD-04 Drawings

Centrifugal Pump System; GA.

A complete listing of equipment and materials. Drawings containing complete wiring and schematic diagrams and any other details required to demonstrate that the system has been coordinated and will properly function as a unit. Drawings shall show proposed layout and anchorage of equipment and appurtenances, and equipment relationship to other parts of the work including clearances for maintenance and operation.

SD-06 Instructions

Centrifugal Pump System; GA.

Proposed diagrams, instructions, and other sheets, prior to posting. Approved wiring and control diagrams showing the complete layout of the entire system, including equipment, piping valves, and control sequence, framed under glass or in approved laminated plastic, shall be posted where directed. Condensed operating instructions explaining preventive maintenance procedures, methods of checking the system for normal safe operation, and procedures for safely starting and stopping the system shall be prepared in typed form, framed as specified above for the wiring and control diagrams, and posted beside the diagrams. The framed instructions shall be posted before acceptance testing of the systems.

Training; GA.

Training course curriculum and training instructions shall be furnished to the Contracting Officer 14 days prior to the start of training.

SD-09 Reports

Tests; FIO.

Test reports in booklet form showing all field tests performed to adjust each component and all field tests performed to prove compliance with the specified performance criteria, upon completion and testing of the installed system. Each test report shall indicate the final position of controls.

SD-13 Certificates

Manufacturer's Field Representative; FIO.

The names and qualifications of the manufacturer's representative and training engineers and written certification from the manufacturer that the representative and trainers are technically qualified.

SD-19 Operation and Maintenance Manuals

Centrifugal Pump System; GA.

Six complete sets of instructions containing the manufacturer's operating and maintenance instructions for each piece of equipment. One complete set at the time the tests procedure is submitted; remaining sets before the contract is completed. Each set shall be permanently bound and shall have a hard cover. The following identification shall be inscribed on the covers: the words "OPERATING AND MAINTENANCE INSTRUCTIONS," name and location of the building, name of the Contractor, and contract number. Flysheets shall be placed before instructions covering each subject. Instruction sheets shall be approximately 8-1/2 by 11 inches, with large sheets of drawings folded in. Instructions shall include, but not be limited to, the following:

a. System layout showing piping, valves, and controls.

b. Approved wiring and control diagrams.

c. A control sequence describing startup, operation, and shutdown.

d. Operating and maintenance instructions for each piece of equipment, including lubrication instructions and troubleshooting guide.

e. Manufacturer's bulletins, cuts, and descriptive data; and parts list and recommended spare parts.

1.4 DELIVERY AND STORAGE

All equipment delivered and placed in storage shall be stored with protection from the weather, humidity and temperature variations, dirt and dust, or other contaminants.

PART 2 PRODUCTS

2.1 MATERIALS AND EQUIPMENT

Materials and equipment shall be as specified below and as shown, and shall be suitable for the service intended. Materials and equipment shall be new and unused, except for tests. Where two or more pieces of equipment performing the same function are required, they shall be duplicate products of the same manufacturer.

2.2 CENTRIFUGAL WATER PUMPS

The pumps shall be the centrifugal, single-stage designed for waterworks service in the Horizontal configurations. Electric sump pumps shall be vertical.

2.2.1 Pump Service

The pumps shall be utilized for the service as indicated on the Drawings.

2.2.2 Pump Drives

The pumps shall have the electric motor driving units with variable speed drives where shown on the motor list, and shall be directly connected to the driving units through solid shafts, flexible couplings, or free wheeling clutches (as appropriate).

2.2.3 Pump Construction

Except as below specified, centrifugal water pumps including required priming equipment shall be constructed in accordance with the Hydraulic Institute HI-01.

2.2.4 Pump Characteristics

The pumps shall be capable of discharging quantities at total discharge heads and shut-off head measured at the discharge flange, as shown on the Equipment Schedules.

Pumps shall operate at optimum efficiencies to produce the most economical pumping system under the conditions encountered. Pumps shall furnish not less than 150 percent of rated capacity at a total discharge head of not less than 65 percent of total rated head. The shutoff total head shall be not greater than 120 percent of total rated head.

2.2.5 Pump Casings

Pump casings shall be cast iron of the following design:

	Pump No.
Horizontal shaft, End Suction	P-7 through P-18, inclusive
Horizontal shaft, horizontal split casing	P-1 through P-6, inclusive

The casings shall be designed to permit replacement of wearing parts. Horizontal-split casings shall have the suction and discharge nozzles cast integrally with the lower half, so that the upper part of the casings may be removed for inspection of the rotating parts without disturbing pipe connections or pump alignment. Pump casings shall be of uniform quality and free from blowholes, porosity, hard spots, shrinkage defects, cracks and other injurious defects. Defects in casings shall not be repaired except when such work is approved and is done by or under the supervision of the pump manufacturer, and then only when the defects are small and do not adversely affect the strength or use of the casing. Casings shall be single or double volute with flanged piping connections conforming to ASME B16.1, Class 125. The direction of shaft rotation shall be conspicuously indicated. The casing shall have tapped openings for air venting, priming, draining, and suction and discharge gauges. A brass or bronze umbrella or vent cock shall be furnished for venting except where automatic air vents are indicated. Drain openings in the volute, intake, or other passages capable of retaining trapped water shall be located in the low point of such passages.

2.2.6 Impellers

Impellers shall be of enclosed design and shall be constructed of bronze, carefully finished with smooth water passageways, and shall be statically and dynamically balanced. Impellers shall be securely keyed to the pump shaft. Impellers on vertical-split pumps shall be additionally secured with a self-locking nut.

2.2.7 Wearing Rings

Wearing rings of bronze shall be provided for impellers. Wearing rings of a different composition or of a suitable ferrous material shall be provided for pump casings. Casing rings shall be securely fixed in position to prevent rotation. Rings shall be renewable and designed to ensure ease of maintenance.

2.2.8 Shaft

Shaft shall be of high grade stainless steel, accurately machined, and shall be of sufficient size and strength to perform the work required. Bronze renewable shaft sleeves shall be provided for protection of the shaft in contact with water, and in the stuffing boxes. Shaft sleeves shall be keyed to the pump shaft.

2.2.9 Packing Seals

Packing shall be non-asbestos. Pump shall be shipped to the site without the packing inserted and shall be packed onsite in the presence of the pump or packing manufacturer's representative. At no time during startup or run-in shall the gland drip less water than 80 drops per minute. After not less than 40 operating hours and upon permission of the Contracting Officer, leakage rate may be reduced to 50 drops per minute or to the rate recommended by packing manufacturer.

2.2.9.1 Gland

Gland shall be split-bronze type with AISI 18-8 stainless steel eyebolts and pins or studs. Hex-nuts shall be bronze or nongalling stainless steel.

2.2.9.2 Stuffing boxes

Stuffing boxes exposed to below atmospheric pressure at any operating condition, including starting, shall be provided with a water seal. Water seal shall consist of nonferrous lantern ring or a seal cage and required connections to the pump case.

2.2.10 Mechanical Seals

Mechanical seals shall be balanced or unbalanced, as necessary to conform to specified service requirements. Mechanical seals shall be constructed in a manner and of materials particularly suitable for the temperature service range and quality of water being pumped. Seal construction shall not require external source cooling for pumped-fluid service temperatures up to 250 degrees F. Seal pressure rating shall be suitable for maximum system hydraulic conditions. Materials of construction shall include AISI 300 series stainless steel, solid tungsten-carbide rotating-seal face, and Buna-N vinylidene-fluoride-hexafluoropropylene, EPT, or tetrafluoroethylene seals. Bypass flushing water supply shall be free of iron rust products and other abrasive materials and shall be directed onto face of seal without dead ending. All piping and accessories shall be provided. Throttling bushing shall have clearances to minimize leakage in case of complete seal failure without restriction of flushing water. Mechanical seals shall not be subjected to hydrostatic test pressures in excess of the manufacturer's recommendations.

2.2.11 Couplings

Couplings shall be of the heavy-duty flexible type, keyed and locked to the shaft. The outside surface of the couplings for horizontal pumps and close-coupled vertical pumps shall be machined parallel to the axis of the shaft. The faces of the couplings shall be machined perpendicular to the axis of the shaft. Disconnecting the couplings shall be accomplished without removing the driver half or the pump half of the couplings from the shaft. Couplings for vertical pumps other than close-coupled vertical pumps may be of the universal type. Flexible couplings shall not be used to compensate for misalignment of pump.

2.2.12 Balance

All rotating parts of the equipment shall operate throughout the required range without excessive end thrust, vibration, or noise. Defects of this type that cannot be eliminated by installation adjustments will be sufficient cause for rejection of the equipment. Pump impeller assemblies shall be statically and dynamically balanced to within 1/2 percent of W times R squared, where W equals weight and R equals impeller radius. Shaft construction shall be substantial to prevent seal or bearing failure due to vibration. Total shaft peak-to-peak dynamic deflection measured by vibrometer at pump-seal face shall not exceed 2.0 mils under shutoff-head operating conditions. Flow from 1/4 inch iron pipe size (ips) pipe shall be provided during testing.

2.2.13 Bearings

Bearings shall be ball or roller type, and the main bearings shall take all radial and end thrust. Pumps that depend only on hydraulic balance to overcome end thrust will not be acceptable.

2.2.14 Lubrication

Grease type bearings shall be provided with fittings for a grease gun and, if the bearings are not easily accessible, with grease tubing extending to convenient locations. The grease fittings shall be of a type that prevent over lubrication and the buildup of pressure injurious to the bearings.

2.2.15 Base Plates

Horizontal-shaft centrifugal pumps shall be provided with a common base for mounting each pump and driving unit of the pump on the same base. Each base shall be constructed of cast iron with a raised lip tapped for drainage, or of welded steel shapes with suitable drainage pan. Horizontal-shaft end suction pumps shall be mounted on a factory furnished channel steel frame. With the exception of close-coupled pumps, horizontal-shaft end suction pumps shall be frame mounted. The drainage structure shall collect the packing box leakage and shall have a 1/2 inch NPT connection to connect it to a drain.

2.2.16 Cocks, Plugs, and Accessories

The pumps shall be equipped with air cocks, drain plugs, and single gauges indicating discharge pressures for all pumps and suction pressures for pumps without suction lift. Gauges, equipped with a shutoff cock and snubber, shall conform to ASME B40.1, and shall be calibrated in pounds per square inch in not more than 2 psi increments. Gauge ranges shall be appropriate for the particular installation. Normal operating suction and discharge pressures of the pump shall be indicated on the mid-point range of the gauges. Pressure relief valve shall be furnished and installed where indicated.

2.2.17 Piping Connections

The pump suction and discharge shall be provided with flanged connections of suitable size and suitably arranged for piping shown. Pipe flanges shall conform to ASME B16.1 and ASME B16.5. Piping shall be installed to

preclude the formation of air pockets.

2.2.18 Finish

Pump shall have painted or enameled finish as is standard with the manufacturer.

2.2.19 Pumps

Pumps shall be selected to operate at or near their point of peak efficiency thus allowing for operation at capacities of approximately 150% of the design capacity. In addition, the design impeller diameter shall be selected so that the design capacity of each pump (GPM and TDH) shall not exceed 80% of the capacity obtainable with maximum impeller diameter at the design speed for that model. Pump curves shall be constantly rising from the design point to the shut off head.

2.3 ELECTRICAL EQUIPMENT

Electrical equipment shall conform to Section 16415 ELECTRICAL WORK, INTERIOR. Electrical motor driven equipment herein specified shall be provided complete with motors, motor starters, and controls. Motor controls, equipment, and wiring shall be in accordance with NFPA 70. Additional requirements for motors, motor controls and wiring shall be as indicated on the Drawings.

2.3.1 Electric Motors

Each electric motor-driven pump shall be driven by a totally-enclosed fan cooled continuous-duty electric motor. Motor shall have a 1.15 service factor. Motors shall be squirrel-cage induction motors having normal-starting-torque and low-starting-current characteristics, and shall be of sufficient size so that the nameplate horsepower rating will not be exceeded throughout the entire published pump characteristic curve. Motor bearings shall provide smooth operations under the conditions encountered for the life of the motor. Adequate thrust bearing shall be provided in the motor to carry the weight of all rotating parts plus the hydraulic thrust and shall be capable of withstanding upthrust imposed during pump starting and under variable pumping head conditions specified. Motors shall be rated for voltage and phase as shown on the Motor List and such rating shall be stamped on the nameplate. Motors shall conform to NEMA MG 1.

2.3.2 Control Equipment

Manually controlled pumps shall have START-STOP pushbutton in cover. Automatically controlled pumps shall have three-position "MANUAL-OFF-AUTOMATIC" selector switch in cover. Additional controls or protective devices shall be as indicated on the Drawings in the Motor List. A pump low-water cutoff shall be installed on the suction pipe and shall shut the pump off when the water pressure is inadequate to have the pump function properly.

2.4 EQUIPMENT APPURTENANCES

2.4.1 Attachments

All necessary bolts, nuts, washers, bolt sleeves, and other types of attachments for the installation of the equipment shall be furnished with the equipment. Bolts shall conform to the requirements of ASTM A 307and nuts shall be hexagonal of the same quality as the bolts used. Threads shall be clean-cut and shall conform to ASME B1.1. Bolts, nuts, and washers specified to be galvanized or not otherwise indicated or specified, shall be zinc coated after being threaded, by the hot-dip process conforming to ASTM A 123. Bolts, nuts, and washers specified or indicated to be stainless steel shall be Type 316.

2.4.2 Equipment Guards

Equipment driven by open shafts, belts, chains, or gears shall be provided with all-metal guards enclosing the drive mechanism. Guard shall be constructed of galvanized sheet steel or galvanized woven wire or expanded metal set in a frame of galvanized steel members. Guards shall be secured in position by steel braces or straps which will permit easy removal for servicing the equipment. The guards shall conform in all respects to all applicable safety codes and regulations.

2.4.3 Tools

A complete set of all special tools which may be necessary for the adjustment, operation, maintenance, and disassembly of all equipment shall be furnished. Special tools are considered to be those tools which because of their limited use are not normally available, but which are necessary for the particular equipment. Special tools shall be high-grade, smooth, forged, alloy, tool steel. One pressure grease gun for each type of grease required for motors shall also be furnished. All tools shall be delivered at the same time as the equipment to which they pertain. The Contractor shall properly store and safeguard such tools until completion of the work, at which time they shall be delivered to the Contracting Officer.

2.4.4 Shop Painting

All motors, pump casings, and similar parts of equipment customarily finished in the shop shall be thoroughly cleaned, primed, and given two finish coats of paint at the factory in accordance with the recommendations of the manufacturer. Ferrous surfaces not to be painted shall be given a shop coat of grease or other suitable rust-resistant coating.

2.5 DUPLEX LIGHT FUEL OIL PUMP SETS

2.5.12.5.1 General

Furnish and install where shown on plans a fuel oil transfer system, consisting of two motor driven pumps, duplex strainer, piping and valves, with controls as a completely packaged system on common Base, incorporating the following comments:

2.5.2 Pumps

Two positive displacement, rotary pumps with mechanical seals, each rated 240 GPH, #2 fuel oil at 38 SSU, 15' lift, 25 discharge pressure, each incorporating built-in pressure relief valve, and direclty connected through flexible coupling to 1/3 HP, 1150 RPM, 1 Phase 60 volt, 115 T.E.F.C. motor.

2.5.3 Pump Set shall be as follows:

1. The unit shall be constructed on a 1-1/2" minimum drip pan, structural base and shall include suction and discharge piping to a common inlet and outlet point.

2. The piping shall include two (2) oil strainers, isolating stop valves, check valves, pressure and vacuum gauges, controls and float switches.

3. The sets shall be prewired two (2) manual on/off starters and shall include two (2) disconnect switches for separate power wiring to each disconnect switch. The starters shall each have a spring return "hand-off auto" (H-O-A) switch such that the switch must be manually held in "hand" position to override automatic operation and set pump to "on".

4. Pumps, strainer and motors shall be mounted on a channel steel base with 1-1/2" drip lip surrounding the strtainer and pumps. Suitable drain plugs shall be provided for draining the drip volume, removable coupling guards shall be provided.

5. Fuel oil set piping shall be schedule 40 piping. A compound pressure gauge shall be provided on the suction of the pumps and individual discharge pressure gauges shall be provided. All gauges shall have isolation valves. Pumps shall have individual check valves on the suction and isolation ball valves on suction and discharge. Valves shall be bronze screwed and rated at 600 WOG.

2.5.4 Controls

Controls shall be housed in a UL approved NEMA 1 cabinet with door mounted controls. This unit shall be compact and have the following control features.

Door mounted circuit breakers for main power and both pump disconnecting means, hand-off-auto selector switches for each pump, automatic alternation, pump run indicating lights, thermal magnetic across-the-line motor starters, alarm control with alarm silence button, son alert horn, alarm light and system rest button. One control circuit transformer line voltage primary fused, shall be furnished to provide control voltage.

External customer connections shall consist of the power supply to the control box. The equipment shall be UL and CSA approved and connection of alarm from dry contacts to the remote alarm (dry) contacts by fuel oil pump manufacturer.

2.5.5 2.5.5 Bypass Relief Line and Valve

Provide internal (adjustable pressure) bypass relief line and valve around the pump.

2.5.6 Pump Set Start-Up

Provide all labor and materials to prime, start and adjust oil pump set as recommended by pump manufacturer. A factory trained representative or the unit manufacturer shall start up the system and attest in writing to the Contracting Officer that the system has been installed per the manufacturer's instructions and is in good working order. Provide one year warranty on all components as hereinbefore specified.

2.5.7 Sequence of Operation

The sequence of operation on this system is as follows:

1. When the H/O/A switch of either pump is manually held in the "hand" position, that pump will run continuously without any alternation or float control. Putting the H/O/A switches in "Auto" will allow the pump to alternate as selected on the "Alt-Hold-Auto" switch.

2. In "Auto", the pumps will alternate the lead on every cycle, in "hold" the lead pump will alternate once and then will not switch again until the "Alt-Hold-Auto" switch is reactivated by moving the switch from hold to alternate again. This will also help isolate a pump for maintenance.

3. The factory provided alarm circuit will activate whenever a lag pump is started to indicate that the lead is not pumping sufficiently.

4. The alarm horn and light will be activated and must be manually reset after the alarm condition has been corrected. However, the alarm could be silenced before the condition has been corrected and the alarm light will stay on for the visual indication only.

PART 3 EXECUTION

3.1 INSTALLATION

Each pump and motor shall be installed in accordance with the written instructions of the manufacturer.

3.1.1 Concrete Foundations

Concrete for equipment foundations shall be as specified in Section 03300 CAST-IN-PLACE STRUCTURAL CONCRETE. Concrete foundations shall be integral with and of the same class as that of the building floor unless otherwise indicated. Concrete having a compressive strength of at least 2,500 psi shall be used in foundations that are entirely separated from the surrounding floor. A premolded filler strip shall be installed between the

foundation and floor slab as shown. Foundation bolts, as required, shall be furnished for proper positioning during the placement of the concrete.

3.1.2 Inertia Bases and Vibration Isolation

Each pump (mechanical, plumbing, and pool equipment applications) with its driving motor shall be bolted and grouted to a spring supported concrete inertia base reinforced as required.

Oil transfer pumps shall not be provided with inertia bases.

Each concrete base (rectangular or "T" shape) for horizontally split pumps shall include supports and base elbows for the suction and discharge connections. Base elbows shall be bolted and grouted to the concrete foundation.

Concrete inertia base thickness shall be in accordance with the following schedule:

Motor Siz	Minimum Inertia Block Thickness Required
5 HP to 20 HP	6"
20 HP to 60 HP	8"
75 HP to 100 HP	10"
Greater than 100 HP	12"

The spring supported concrete inertia foundation shall be poured within structural perimeter frame (reinforced as necessary) of the required thickness indicated in the above schedule. The structural perimeter frame shall be equipped with height saving brackets, seismic restraints, and stable bare spring isolators having spring diameters no less than 0.8 of the compressed height of the spring at rated load. The mountings shall provide minimum static deflections as indicated on the equip-ment schedule. The structural perimeter frame, mounting templates, height saving brackets, seismic restraints, and spring system shall be provided as an assembly by the vibration control vendor.

3.2 TESTS

After installation of the pumping units and appurtenances is complete, operating tests shall be carried out to assure that the pumping installation operates properly. The Contractor shall make arrangements to have the manufacturer's representatives present when field equipment tests are made. Each pumping unit shall be given a running field test in the presence of the Contracting Officer for a minimum of 2 hours. Each pumping unit shall be operated at its rated capacity or such other point on its head-capacity curve selected by the Contracting Officer. The Contractor shall provide an accurate and acceptable method of measuring the discharge flow. For submersible pumping units, an insulation resistance test of the cable and the motor shall be conducted prior to installation of the pump, during installation of the pump, and after installation is complete. The resistance readings shall not be less than 10 megohms. Tests shall assure that the units and appurtenances have been installed correctly, that there

is no objectionable heating, vibration, or noise from any parts, and that all manual and automatic controls function properly. If any deficiencies are revealed during any tests, such deficiencies shall be corrected and the tests shall be reconducted.

3.3 FIELD PAINTING

Stainless steel, galvanized steel, and nonferrous surfaces shall not be painted.

3.3.1 Touch-Up Painting

Factory painted items requiring touching up in the field shall be thoroughly cleaned of all foreign material and shall be primed and topcoated with the manufacturer's standard factory finish.

3.3.2 Exposed Ferrous Surfaces

Exposed ferrous surfaces shall be painted with two coats of enamel paint conforming to SSPC Paint 21. Factory primed surfaces shall be solvent-cleaned before painting. Surfaces that have not been factory primed shall be prepared and primed with one coat of SSPC Paint 25or in accordance with the enamel paint manufacturer's recommendations.

3.4 MANUFACTURER'S FIELD SERVICES

The Contractor shall obtain the services of a manufacturer's representative experienced in the installation, adjustment, and operation of the equipment specified. The representative shall supervise the installation, adjustment, and testing of the equipment. Up to 10 days service shall be provided at no expense to the Government.

3.5 DEMONSTRATION

Upon completion of the work and at a time designated by the Contracting Officer, the services of one or more competent engineers shall be provided by the Contractor for a period of not less than 24 hours to instruct a representative of the Government in the operation and maintenance of equipment furnished under this section of the specifications. These field instructions shall cover all the items contained in the bound instructions.

-- End of Section --

SECTION 11310

PUMPS; SEWAGE AND SLUDGE

PART 1 GENERAL

1.1 REFERENCES

The publications listed below form a part of this specification to the extent referenced. The publications are referred to in the text by the basic designation only.

AMERICAN BEARING MANUFACTURERS ASSOCIATION (ABEMA)

ABEMA Std 9	(1990) Load Ratings and Fatigue Life for Ball Bearings
ABEMA Std 11	(1990) Load Ratings and Fatigue Life for Roller Bearings

AMERICAN SOCIETY FOR TESTING AND MATERIALS (ASTM)

ASTM A 153	1996) Zinc Coating (Hot-Dip) on Iron and Steel Hardware

AMERICAN SOCIETY OF MECHANICAL ENGINEERS (ASME)

ASME B40.1	(1991) Gauges - Pressure Indicating Dial Type - Elastic Element

NATIONAL ELECTRICAL MANUFACTURERS ASSOCIATION (NEMA)

NEMA ICS 1	(1993) Industrial Controls and Systems
NEMA MG 1	(1993; Rev 1; Rev 2) Motors and Generators

NATIONAL FIRE PROTECTION ASSOCIATION (NFPA)

NFPA 70	(1996) National Electrical Code

1.2 SUBMITTALS

Government approval is required for submittals with a "GA" designation; submittals having an "FIO" designation are for information only. The following shall be submitted in accordance with Section 01330 SUBMITTAL PROCEDURES:

SD-01 Data

Sewage and Sludge Pump System; GA.

Pump characteristic curves showing capacity in gpm, net positive suction head (NPSH), head, efficiency, and pumping horsepower from 0 gpm to 110 percent (100 percent for positive displacement pumps) of design capacity. A complete list of equipment and material, including manufacturer's descriptive data and technical literature, performance charts and curves, catalog cuts, and installation instructions.

Spare Parts; GA.

Spare parts data for each different item of material and equipment specified, after approval of the related submittals, and not later than three months prior to the date of beneficial occupancy. The data shall include a complete list of parts and supplies, with current unit prices and source of supply.

SD-04 Drawings

Sewage and Sludge Pump System; GA.

Drawings containing complete wiring and schematic diagrams and any other details required to demonstrate that the system has been coordinated and will properly function as a unit. Drawings shall show proposed layout and anchorage of equipment and appurtenances, and equipment relationship to other parts of the work including clearances for maintenance and operation.

SD-06 Instructions

Sewage and Sludge Pump System; GA.

Diagrams, instructions, and other sheets proposed for posting.

SD-09 Reports

Field Testing and Adjusting Equipment; GA.

Performance test reports in booklet form showing all field tests performed to adjust each component and all field tests performed to prove compliance with the specified performance criteria, upon completion and testing of the installed system. Each test report shall indicate the final position of controls.

SD-19 Operation and Maintenance Manuals

Sewage and Sludge Pump System; GA.

Six copies of operation and six copies of maintenance manuals for the equipment furnished. One complete set prior to performance testing and the remainder upon acceptance. Operation manuals shall detail the step-by-step procedures required for system startup, operation, and shutdown. Operation manuals shall include the manufacturer's name, model number, parts list, and brief description of all equipment and their basic operating features. Maintenance manuals shall list routine maintenance procedures, possible breakdowns and repairs, and troubleshooting guides. Maintenance manuals

shall include piping and equipment layout and simplified wiring and control diagrams of the system as installed. Manuals shall be approved prior to the field training course.

1.3 DELIVERY AND STORAGE

All equipment delivered and placed in storage shall be stored with protection from the weather, excessive humidity and excessive temperature variation; and dirt, dust, or other contaminants.

1.4 FIELD MEASUREMENTS

The Contractor shall become familiar with all details of the work, verify all dimensions in the field, and shall advise the Contracting Officer of any discrepancy before performing the work.

PART 2 PRODUCTS

2.1 GENERAL MATERIAL AND EQUIPMENT REQUIREMENTS

Materials and equipment shall be the standard products of a manufacturer regularly engaged in the manufacture of such products and shall essentially duplicate items that have been in satisfactory use for at least 2 years prior to bid opening. Equipment shall be supported by a service organization that is, in the opinion of the Contracting Officer, reasonably convenient to the site. Pump casings shall be constructed of cast iron of uniform quality and free from blow holes, porosity, hard spots, shrinkage defects, cracks, and other injurious defects. Impellers shall be cast bronze fitted with cast iron casing.

2.1.1 Nameplates

Each major item of equipment shall have the manufacturer's name, address, type or style, model or serial number, and catalog number on a plate secured to the item of equipment.

2.1.2 Equipment Guards

Belts, pulleys, chains, gears, projecting setscrews, keys, and other rotating parts so located that any person may come in close proximity thereto shall be enclosed or guarded.

2.1.3 Special Tools

One set of special tools, calibration devices, and instruments required for operation, calibration, and maintenance of the equipment shall be provided.

2.1.4 Electric Motors

Motors shall conform to NEMA MG 1.

2.1.5 Motor Controls

Controls shall conform to NEMA ICS 1.

2.1.6 Bolts, Nuts, Anchors, and Washers

Bolts, nuts, anchors, and washers shall be steel; galvanized in accordance with ASTM A 153.

2.1.7 Pressure Gauges

Compound gauges shall be provided on the suction side of pumps and standard pressure gauges on the discharge side of pumps. Gauges shall comply with ASME B40.1. Gauge ranges shall be as appropriate for the particular installation.

2.1.8 Seal Water Systems

2.1.8.1 Float Valve

The float valve shall be mounted on the tank to maintain a water level below an overflow provided near the top of the tank and to maintain a 6 inch air gap between the water system and the top of the tank.

2.1.8.2 Auxiliary Equipment

Auxiliary equipment required to complete the system shall be as indicated and shall include the necessary piping, valving, pressure gauges, pressure regulators, pressure switches, solenoid valves, strainers, and accessories.

2.1.8.3 Controls

The solenoid valve shall open whenever the process pump motor is energized. The pressure switch shall signal an alarm and stop the process pump whenever the seal pressure is below a set point. The pressure regulating valve shall be located on a bypass line back to the seal water reservoir tank. The pressure switch and pressure regulating valve set points shall be determined by the process pump manufacturer. A valved bypass around each solenoid valve shall also be provided.

2.2 CENTRIFUGAL SOLIDS HANDLING PUMPS

Centrifugal solids handling pumps shall be of the nonclogging centrifugal type designed to pump solids up to 3 inches in diameter and which provide no internal interstices that catch solids and stringy materials to cause clogging.

2.2.1 Pump Characteristics

See schedule on Drawings.

2.2.2 Pump Casing

Pump casing shall be constructed with tapped and plugged holes for venting and draining the pump. The casing shall be capable of withstanding pressures 50 percent greater than the maximum operating pressure. The volute shall have smooth passages. The casing shall be such that the

impeller can be removed without disturbing the suction and discharge connections. The casing shall have a handhole to permit inspection and cleaning of the pump interior. Lifting eyes shall be provided to facilitate handling of the pump.

2.2.3 Impeller

The impeller shall be designed with smooth passages to prevent clogging and pass stringy or fibrous materials. The impeller shall be statically, dynamically, and hydraulically balanced within the operating range and to the first critical speed at 150 percent of the maximum operating speed. The impeller shall be securely keyed to the shaft with a locking arrangement whereby the impeller cannot be loosened by torque from either forward or reverse direction.

2.2.4 Wearing Rings

Renewable wearing rings shall be provided on the impeller and casing and shall have wearing surfaces normal to the axis of rotation. Wearing rings shall be constructed of steel. Wearing rings shall be designed for ease of maintenance and shall be secured to prevent rotation. Replaceable steel wear plates fastened to casing may be used in lieu of wearing rings on casing and impeller.

2.2.5 Pump Shaft

Pump shaft shall be of stainless or high grade alloy steel and shall be of adequate size and strength to transmit the full driver horsepower with a liberal safety factor.

2.2.6 Pump Shaft Sleeve

The pump shaft shall be protected from wear by a stainless steel, high grade alloy steel, or bronze shaft sleeve. The joint between the shaft and sleeve shall be sealed to prevent leakage.

2.2.7 Stuffing Box

The stuffing box shall be of the same material as the casing and shall be grease sealed. The stuffing box shall be designed for a minimum of five rings of packing and shall have easily removable split type glands.

2.2.8 Mechanical Seals

Double mechanical seals shall be provided to seal the pump shaft against leakage. Each seal interface shall be held in contact by its own spring system, supplemented by external liquid pressures. The seal system shall be constructed to be readily removable from the shaft.

2.2.9 Bearings

Pump bearings shall be ball or roller type designed to handle all thrust loads in either direction. Pumps depending only on hydraulic balance end thrust will not be acceptable. Bearings shall have an ABEMA L-10 life of

50,000 hours minimum, as specified in ABEMA Std 9 or ABEMA Std 11.

2.2.10 Lubrication

Bearings shall be grease lubricated. A grease fitting shall be provided for grease-lubricated bearings. The grease fitting shall be of the type that prevents overlubrication and the building up of pressure injurious to the bearings. If the grease fitting is not easily accessible, grease tubing shall be provided to a convenient location.

2.2.11 Pump Support

Horizontal centrifugal pumps shall be provided with a common base plate for the pump and motor. Vertical shaft centrifugal pumps shall be provided with separate bases for the pump and motor. Vertical dry pit centrifugal pumps shall be supported by a heavy cast iron base with adequate legs to provide maximum rigidity and balance.

2.2.12 Coupling

Couplings shall be of the heavy-duty flexible type, keyed or locked to the shaft. Disconnecting of the coupling shall be possible without removing the driver half or the pump half of the coupling from the shaft. Couplings for extended shaft vertical centrifugal pumps may be of the universal type.

2.3 SUBMERSIBLE CENTRIFUGAL PUMPS

Submersible centrifugal pumps shall be centrifugal type pumps designed to pump solids up to 3 inches in diameter and shall be capable of withstanding submergence as required for the particular installation.

2.3.1 Pump Characteristics

See schedule on Drawings.

2.3.2 Pump Casing

The casing shall be capable of withstanding operating pressures 50 percent greater than the maximum operating pressures. The volute shall have smooth passages which provide unobstructed flow through the pump.

2.3.3 Mating Surfaces

Mating surfaces where watertight seal is required, including seal between discharge connection elbow and pump, shall be machined and fitted with nitrile rubber O-rings. Fitting shall be such that sealing is accomplished by metal-to-metal contact between mating surfaces, resulting in proper compression of the O-rings without the requirement of specific torque limits.

2.3.4 Coatings

Exterior surfaces of the casing in contact with sewage shall be protected by a sewage resistant coal tar epoxy coating. All exposed nuts and bolts

shall be stainless steel.

2.3.5 Impeller

The impeller shall be of the single or double shrouded non-clogging design to minimize clogging of solids, fibrous materials, heavy sludge, or other materials found in sewage. The impeller shall be statically, dynamically, and hydraulically balanced within the operating range and to the first critical speed at 150 percent of the maximum operating speed. The impeller shall be securely keyed to the shaft with a locking arrangement whereby the impeller cannot be loosened by torque from either forward or reverse direction.

2.3.6 Wearing Rings

Wearing rings, when required, shall be renewable type and shall be provided on the impeller and casing and shall have wearing surfaces normal to the axis of rotation. Material for wear rings shall be standard of pump manufacturer. Wearing rings shall be designed for ease of maintenance and shall be adequately secured to prevent rotation.

2.3.7 Pump Shaft

The pump shaft shall be of high grade alloy steel and shall be of adequate size and strength to transmit the full driver horsepower with a liberal safety factor.

2.3.8 Seals

A tandem mechanical shaft seal system running in an oil bath shall be provided. Conventional mechanical seals which require a constant pressure differential to effect sealing will not be allowed.

2.3.9 Bearings

Pump bearings shall be ball or roller type designed to handle all thrust loads in either direction. Pumps depending only on hydraulic balance end thrust will not be acceptable. Bearings shall have an ABEMA L-10 life of 50,000 hours minimum, as specified in ABEMA Std 9 or ABEMA Std 11.

2.3.10 Motor

The pump motor shall have Class F insulation, NEMA B design, in accordance with NEMA MG 1, and shall be watertight. The motor shall be either oil filled, air filled with a water jacket, or air filled with cooling fins which encircles the stator housing.

2.3.11 Power Cable

The power cable shall comply with NFPA 70, Type SO, and shall be of standard construction for submersible pump applications. The power cable shall enter the pump through a heavy duty entry assembly provided with an internal grommet assembly to prevent leakage. The cable entry junction chamber and motor shall be separated by a stator lead sealing gland or

terminal board which shall isolate the motor interior from foreign material gaining access through the pump top. Epoxies, silicones, or other secondary sealing systems are not acceptable.

2.3.12 Installation Systems

2.3.12.1 Rail Mounted Systems

Rail mounted installation systems shall consist of guide rails, a sliding bracket, and a discharge connection elbow. Guide rails shall be of the size and type standard with the manufacturer and shall not support any portion of the weight of the pump. The sliding guide bracket shall be an integral part of the pump unit. The discharge connection elbow shall be permanently installed in the wet well along with the discharge piping. The pump shall be automatically connected to the discharge connection elbow when lowered into place and shall be easily removed for inspection and service without entering the pump well.

2.3.12.2 Bolt Down Systems

The pump mount system shall include a base designed to support the weight of the pump. The base shall be capable of withstanding all stresses imposed upon it by vibration, shock, and direct and eccentric loads.

2.3.12.3 Lifting Chain

Lifting chain to raise and lower the pump through the limits indicated shall be provided. The chain shall be galvanized and shall be capable of supporting the pump.

2.4 ELECTRICAL WORK

Electrical motor driven equipment specified shall be provided complete with motors, motor starters, and controls. Electric equipment and wiring shall be in accordance with Section 16415 ELECTRICAL WORK, INTERIOR. Electrical characteristics shall be as specified or indicated. Motor starters shall be provided complete with thermal overload protection and other appurtenances necessary for the motor control specified. Manual or automatic control and protective or signal devices required for the operation specified, and any control wiring required for controls and devices but not shown, shall be provided.

PART 3 EXECUTION

3.1 EQUIPMENT INSTALLATION

3.1.1 Pump Installation

Pumping equipment and appurtenances shall be installed in the position indicated and in accordance with the manufacturer's written instructions. All appurtenances required for a complete and operating pumping system shall be provided, including such items as piping, conduit, valves, wall sleeves, wall pipes, concrete foundations, anchors, grouting, pumps, drivers, power supply, seal water units, and controls.

3.1.2 Concrete

Concrete shall conform to Section 03300 CAST-IN-PLACE STRUCTURAL CONCRETE.

3.2 PAINTING

Pumps and motors shall be thoroughly cleaned, primed, and given two finish coats of paint at the factory in accordance with the recommendations of the manufacturer. Field painting required for ferrous surfaces not finished at the factory is specified in Section 09900 PAINTING, GENERAL.

3.3 FIELD TESTING AND ADJUSTING EQUIPMENT

3.3.1 Operational Test

Prior to acceptance, an operational test of all pumps, drivers, and control systems shall be performed to determine if the installed equipment meets the purpose and intent of the specifications. Tests shall demonstrate that the equipment is not electrically, mechanically, structurally, or otherwise defective; is in safe and satisfactory operating condition; and conforms with the specified operating characteristics. Prior to applying electrical power to any motor driven equipment, the drive train shall be rotated by hand to demonstrate free operation of all mechanical parts. Tests shall include checks for excessive vibration, leaks in all piping and seals, correct operation of control systems and equipment, proper alignment, excessive noise levels, and power consumption.

3.3.2 Retesting

If any deficiencies are revealed during any test, such deficiencies shall be corrected and the tests shall be reconducted.

3.4 MANUFACTURER'S SERVICES

Services of a manufacturer's representative who is experienced in the installation, adjustment, and operation of the equipment specified shall be provided. The representative shall supervise the installation, adjustment, and testing of the equipment.

3.5 POSTING FRAMED INSTRUCTIONS

Framed instructions containing wiring and control diagrams under glass or in laminated plastic shall be posted where directed. Condensed operating instructions, prepared in typed form, shall be framed as specified above and posted beside the diagrams. The framed instructions shall be posted before acceptance testing of the system.

3.6 FIELD TRAINING

A field training course shall be provided for designated operating and maintenance staff members. Training shall be provided for a total period of two hours of normal working time and shall start after each system is functionally complete but prior to final acceptance tests. Field training

shall cover all of the items contained in the operating and maintenance manuals.

-- End of Section --

SECTION 11480

ATHLETIC EQUIPMENT

PART 1 GENERAL

1.1 REFERENCES

The publications listed below form a part of this specification section to the extent referenced. The publications are referred to in the text by basic designation only.

NATIONAL COLLEGIATE ATHLETIC ASSOCIATION (NCAA)

NCAA Basketball Rules	(2000) Basketball Men's and Women's Rules and Interpretations
NCAA Wrestling Rules	(2000) Wrestling Rules and Interpretations

NATIONAL FIRE PROTECTION ASSOCIATION (NFPA)

NFPA 70	(1999) National Electric Code

UNITED STATES AMATEUR BOXING, INCORPORATED (USA Boxing)

USA Boxing Rules	Official Rules

UNITED STATES VOLLEYBALL ASSOCIATION (USVA)

USVA Rules	(1999-2000) Official United States Volleyball Rule

1.2 SUBMITTALS

Government approval is required for submittals with a "GA" designation; submittals having an "FIO" designation are for information only. The following shall be submitted in accordance with Section 01330 SUBMITTAL PROCEDURES:

SD-01 Data

Basketball Equipment; GA, Divider Curtains; GA, Wall Padding; GA, Volleyball Standards; GA, Wrestling Mats; GA, Boxing Rings; GA, Chinning Bars; GA, Boxing Equipment; GA

Submit manufacturer's specifications and installation instructions for athletic equipment products and system, including certifications and other data required to show compliance with Contract Documents.

SD-04 Drawings

Basketball Equipment; GA, Divider Curtains; GA, Wall Padding; GA, Volleyball Standards; GA, Wrestling Mats; GA, Boxing Rings; GA, Chinning Bars; GA, Boxing Equipment; GA

Submit Shop Drawings for athletic equipment showing dimensions, methods for anchoring and attaching and other pertinent details of fabrication and installation.

Supplemental Framing; GA.

Engage the services of a Professional Engineer registered in the State of New York to prepare complete shop drawings and structural design computations for all supplemental framing required to support work of this Section. Drawings and computations shall bear the engineer's professional seal.

Note: Manufacturer's shop drawings reviewed and stamped by the engineer are acceptable instead of those actually prepared by the engineer.

The shop drawings shall show all pertinent details of construction, installation, and anchorage of the supplemental framing framing work.

The structural design computations shall provide a complete structural analysis of all typical and special conditions of construction, and shall certify conformance to the governing laws and building code, including seismic requirements.

SD-13 Certificates

Wall Padding; GA, Divider Curtains; GA

Manufacturers of protective padding shall submit certification that the materials used in construction of protective padding, including foam, meet or exceed the fire classification requirements of local authorities having jurisdiction.

Manufacturers of divider curtain shall submit certification that the materials used in construction of athletic curtain meet or exceed the fire classification requirements of local authorities having jurisdiction.

SD-14 Samples

Divider Curtain Material; GA.

Submit divider curtain sample 24 inch long by 24 inch wide including 12 inches of net and 12 inches of vinyl fabric with joint and edge seaming matching that of the finished product.

Padding Material; GA.

Submit 12 inch by 12 inch sample of wall padding system including backer board, foam filler, fire resistant liner and vinyl fabric. Sample shall include top, bottom and one side edge detailing matching that of finished

product. One side edge shall be cut away to permit viewing of cross section of system.

SD-19 Operation and Maintenance Manuals

Operation, Maintenance, and Cleaning Instructions; FIO.

Submit in accordance with the requirements of Section 00800 SPECIAL CONTRACT REQUIREMENTS detailed instructions indicating operation of each equipment item and proper and recommended maintenance and cleaning instructions. Include as-built electrical wiring and control diagrams for items with electric operation. Include video tape of training.

1.3 SCOPE OF WORK

Provide athletic equipment work with required or necessary accessories, devices, controls, electrical work and the like as required by the documents. Provide proper operation and function of each item and assembly. Athletic equipment shall include, but is not limited to:

1. Basketball backstops, together with backboards, goals, nets, electrically operated winches, safety devices, controls and supplemental framing.
2. Fold-up and roll-up divider curtains together with electrically operated winches, safety devices, controls and supplemental framing.
3. Wall padding system including field fabricated corners, column covers and Z clip hanging system.
4. Volleyball standards, net and anchoring system.
5. Wrestling mats.
6. Boxing rings with anchoring system.
7. Chinning bars.
8. Boxing equipment including punching bags, upper cut bags, speed bag platforms, double-end bags together with anchoring and hanging systems.
9. Ballet barre and brackets.
10. Commissioning of operable systems.

1.4 RELATED WORK

Examine Contract Documents for requirements that affect work of this Section. Other Specification Sections that directly relate to work of this Section include, but are not limited to:

1. Section 03300, CAST-IN-PLACE STRUCTURAL CONCRETE.
2. Section 04200, MASONRY.
3. Section 05400 COLD-FORMED METAL FRAMING
4. Section 05500 MISCELLANEOUS METAL
5. Section 09510, ACOUSTICAL CEILINGS.
6. Section 09640, WOOD STRIP FLOORING; Wood athletic flooring.
7. Section 09900, PAINTING, GENERAL; Painting.
8. Section 11482, SCOREBOARDS AND TIMING SYSTEMS.
9. Division 16 - ELECTRICAL.
10. Section 16415 ELECTRICAL WORK, INTERIOR

11. Section 16800 CENTRAL PAGING SYSTEM, SOUND SYSTEMS AND AUDIO-VISUAL SYSTEMS

1.5 QUALITY ASSURANCE

Equipment shall conform to the applicable rules and specifications on the referenced standard or, if none is specified, to the requirements of the NCAA for the sport/event indicated.

Installer Qualifications: Provide services of installers trained and experienced in the installation of athletic equipment of the type specified herein.

1.5.1 Seismic Performance:

Provide supplemental framing for athletic equipment and applied loads capable of withstanding the effects of earthquake motions determined according to the 1994 Uniform Building Code and for ASCE 7, Minimum Design Loads for Buildings and Other Structures": Section 9, "Earthquake Loads", whichever is more stringent.

1.5.2 Electrical Components, Devices, and Accessories:

All electrical components, devices and accessories shall be listed and labeled as defined in NFPA 70, Article 100, by a testing agency acceptable to Contracting Officer, and marked for intended use.

1.5.3 Environmental Limitations:

Do not install gymnasium equipment until spaces are permanently enclosed and weatherproof, wet work in spaces, including painting, is complete and dry, and ambient temperature and humidity conditions are maintained at the levels required for the Project when occupied for intended use.

1.5.4 Field Measurements:

Verify position and elevation of all inserts with structural floors and finish flooring installation and with court layout and gamelines and markers on finish flooring.

Coordinate layout and installation of supplemental framing for overhead supported athletic equipment and suspension system components with other construction that penetrates ceilings or is supported by them, including electrical work, light fixtures, mechanical work including air distribution materials, fire-suppression system work and partition assemblies.

1.6 PRODUCT DELIVERY AND STORAGE

Materials shall be stacked and stored above ground under protective coverings or indoors in such manner as to provide proper drainage, ventilation, and protection. Materials which become damaged shall be replaced with new items.

1.7 WARRANTIES

Provide written manufacturer's warranties in Government's name for materials furnished under this Section where such guarantees are offered in published product data, in addition to, and not instead of, other liabilities established by law or other provisions of the Contract Documents.

Provide statement from manufacturer stating all materials shall be guaranteed for a minimum period of two (2) years from date of acceptance of the work by the Government. This warranty shall provide for repair or replacement of any materials found defective in manufacture or any field labor damage and/or work not installed in accordance with the Contract Documents.

PART 2 PRODUCTS

2.1 GENERAL

One or more manufacturer's names and catalogue numbers are listed for each item specified below. These names and catalogue numbers are listed to set the standard of quality and design required. Provide the specified item, or an equal product in appearance and performance from one of the other manufacturers listed which meet or exceed the standard of quality and design as judged solely by the Contracting Officer.

Obtain each type of athletic equipment from only one manufacturer. Basketball backstops and divider curtains shall be obtained from the same manufacturer.

2.2 SUPPLEMENTAL FRAMING

2.2.1 Overhead Supplemental Framing:

Provide additional framing to properly support athletic equipment from overhead structure. Additional framing shall extend from overhead structure through ceiling system. Framing shall be configured to provide not more than four penetrations of ceiling system at each basketball backstop system, not more that one penetration per 10 feet of length at each divider curtain, and not more than two penetrations for each other item of athletic equipment item, unless specifically approved otherwise by the Contracting Officer. Supplemental framing shall be configured to permit proper operation of other work, including light fixtures, diffusers, and the like, and to minimally project below the finished ceiling. Provide angle trim or escutcheons configured to neatly close each ceiling system penetration. Angle trim or escutcheons shall be formed to match penetrating member or item and finished to match ceiling system components. Angled trim or escutcheon shall be tight against ceiling panels and positively fastened to penetrating member to prevent angle trim or escutcheon dislocation. Corners shall have continuous flanges against ceiling surface. Additional framing shall be painted flat (matte) white.

2.2.2 Wall Supplemental Framing:

Provide additional framing concealed in wall systems to properly support

athletic equipment. Additional framing shall include blocking, cold-formed metal framing in accordance with the requirements of section 05400 COLD-FORMED METAL FRAMING, grouted and reinforced cores in concrete masonry units in accordance with section 04200 MASONRY, and the like.

2.3 ELECTRIC FOLDING BASKETBALL BACKSTOPS, BACKBOARDS, AND GOALS

2.3.1 Manufacturers:

Provide products and systems of one of the following manufacturers that meet or exceed the requirements specified:

1. Porter Athletic Equipment Co.; Broadview, IL 60153.
2. AALCO Manufacturing; St. Louis, MO 63125.
3. American Athletic, Inc.; Jefferson, Iowa 50129.
4. Jaypro Sports Equipment; Waterford, CT 06385.
5. Approved equal.

2.3.2 Folding Basketball Backstops:

Provide as required side or rear folding backstop assemblies. Folding backstop assemblies shall be overhead structure supported with supplemental framing and shall include tempered glass backboards and collapsible goals, as manufactured by Porter Athletic Equipment Company (Porter), or approved equal. All backstop assemblies shall be suitable for basketball competition play in accordance with the requirements of NCAA Basketball Rules. All backstop framing and supplemental framing shall be painted flat (matte) white. Provide capacity in backstop and supplemental framing to support speakers and shot clocks where such are indicated to be backstop mounted.

1. Folding Basketball Backstop: Provide where side folding backstops are indicated Porter Model 955 series Center-Strut Ceiling Suspended, Side-Fold, Rear Braced Backstop. Provide where rear folding backstops are indicated Porter Model 923 series Center-Strut Ceiling Suspended, Back-Fold, Rear Braced Backstop.

2. Provide each backstop with backboard. Backboard shall be Porter Model 00208-000 rectangular tempered glass backboard with aluminum faced tubular steel frame. Backboard shall be 72 inch wide by 42 inch high with fused target and boarder markings. Marking color shall be white.
3. Provide each backboard with Porter Model 00326-000 Bolt-On Backboard Safety Padding. Color shall be manufacturer's standard medium gray.
4. Provide goal with net at each backstop. Goal shall be Porter Model 00245-500 Ultra-Flex at each backstop in rooms Y440 and Z360, and Porter Model 00225-000 High Strength Goal at each backstop in room Y240. Provide each goal properly mounted to transfer goal loads directly to backstop without loading backboard.
5. Provide each backstop with electrically operated winch. Winch shall be Porter Model 00706-000 1/2 horsepower or model 00707-000 3/4 horsepower as required by backstop and applied loads. Provide each winch with wall mounted key operated switch.

6. Provide each backstop with safety lock. Safety lock shall be Porter Model 10797-100 Saf-Strap basketball safety lock.

2.4 DIVIDER CURTAINS

2.4.1 Manufacturers:

Provide products and systems of one of the following manufacturers that meet or exceed the requirements specified:

1. Porter Athletic Equipment Co.; Broadview, IL 60153.
2. AALCO Manufacturing; St. Louis, MO 63125.
3. American Athletic, Inc.; Jefferson, Iowa 50129.
4. Jaypro Sports Equipment; Waterford, CT 06385.
5. Approved equal.

2.4.2 Divider Curtain Assemblies:

Provide as required folding or rolling divider curtain assemblies. Divider curtain assemblies shall be overhead structure supported with supplemental framing and as manufactured by Porter Athletic Equipment Company (Porter), or approved equal. All supplemental framing shall be painted flat (matte) white. Divider curtains shall extend to 5 feet from room walls unless indicated otherwise.

1. Provide where indicated in rooms Y240 and Y440 folding divider curtains. Folding divider curtains shall be Porter Athletic Equipment Company Model 90670 series Fold-Up Curtain. Curtain shall have 8 feet high solid vinyl polyester reinforced 19 ounce vinyl coated fabric lower section and 80% open area, 7 by 5 1000 denier polyester base fabric with PVC coated netting upper section equal to Porter Flexinet extending from fabric lower section to room ceiling. Color of fabric lower section shall be manufacturer's medium grey. Color of net shall be white. Curtain bottom bar shall have 3/4 inch thickness padding covered by lower section fabric. Provide electric winch for each folding divider curtain. Winch shall be Porter Model 10670-100 3/4 horsepower as required by divider curtain.

2. Provide each divider curtain with wall mounted key operated switch.

2.5 WALL PADDING

2.5.1 Manufacturers:

Provide products and systems of one of the following manufacturers that meet or exceed the requirements specified:

1. Porter Athletic Equipment Co.; Broadview, IL 60153.
2. American Athletic, Inc.; Jefferson, Iowa 50129.
3. Jaypro Sports Equipment; Hartford, CT 06385.
4. Approved equal.

2.5.2 Wall Padding

Provide wall padding where indicated, Porter Athletic Equipment Company (Porter) Model 00349-400 series and as required herein. Wall padding shall be 2 inch thick, 6 pound density foam filler laminated to a 1/2 inch oriented strand board backing with fire resistive liner of cellular polychloroprene and reinforced vinyl coated polyester fabric cover. Cover shall wrap edges of foam filler and backing board with neatly formed corners and secured to backing board. Wall padding shall be prefabricated 24 inches wide sections by height indicated, or if not indicated, 70 inches high. Provide factory or field formed corner and column covers with 12 inch finished face on each side of corners and wrapping column flanges at columns. Provide field cut-outs for all electrical devices, mechanical devices, fire protection devices, athletic equipment, and the like. Cut-outs shall be finished with reinforced vinyl fabric to match panel cover with neatly formed surfaces and corners completely conceal foam fill, liner and backing board. Provide continuous wall mounted Z channels, Porter Model 00347-200 at top and bottom of each wall padding panel with not less than four (4) matching Z clips, Porter Model 00347-100, mounted to backing board.

Vinyl fabric cover colors shall be as indicated on the drawings or required in section 09915 COLOR SCHEDULE.

2.6 VOLLEYBALL STANDARDS AND NETS

2.6.1 Manufacturers:

1. Porter Athletic Equipment Company; Broadview, IL 60153.
2. American Athletic, Inc.; Jefferson, Iowa 50129.
3. Jaypro Sports Equipment; Waterford, CT 06385.
4. approved equal.

2.6.2 Volleyball Standard and Net System:

Provide at each volleyball court required a complete volleyball standard and net system. See section 09640 WOOD STRIP FLOORING for required volleyball courts. Provide Porter Model 00244-000 Sleeper Type Adjustable Floor Plate anchors in chrome finish, or approved equal, as required to provide proper support of each standard and net system. Standard and net system shall be in accordance with the requirements of USVA Rules.

1. Provide for each volleyball court in room Y440 Porter Model 01995-000 Power-Line Portable Volleyball System and Porter Model 02295-420 Net. Provide all inserts, winches, anchors, antennas, protective padding on standards, and the like for a complete system. Padding color shall be black.

2. Provide for each volleyball court in rooms Y240 and Z360 Porter Model 01975-000 Power-Rib II Portable Volleyball System and Porter Model 02295-360 Net. Provide all inserts, winches, anchors, antennas, protective padding on standards, and the like for a complete system. Padding color shall be black.

2.7 WRESTLING MATS

Provide where indicated wrestling mats. Wrestling mats shall be as manufactured by Resilite Sports Products, Inc., Model RWB-600 Challenger Series Wrestling Mats, or approved equal, as required below, and in conformance with NCAA Wrestling Rules.

1. Wrestling Mats shall be 42 feet wide by 42 feet long by 1 inch thickness. Foam filler shall be PVC rubber nitrile foam, 5 to 7 pounds per cubic foot density, 5.5 to 7.5 pounds per square inch 25% compression resistance and 75 pounds per square inch minimum tensile strength. Provide 1/2 inch thick foam underlayment under mat. Underlayment foam shall match mat foam filler.
2. Mats shall have Resilite Sports Products, Inc. Duralite water based coating or approved equal. Mat shall have 1% nominal shrinkage factor. Mat shall have two toned circle on one side with black center circle and perimeter and gold competition circle in accordance with NCAA Wrestling requirements. Opposite side of mat shall have international layout in black and gold in accordance with FILA requirements.

2.8 CHINNING BARS

Provide where indicated chinning bars. Chinning bars shall be Porter Athletic Equipment Company Model 00197-200 Wall Mount Chinning Bar, Jaypro Model ECCB-1 Economy Chinning Bar, or approved equal.

2.9 BOXING EQUIPMENT

2.9.1 Manufacturers:

Provide products and systems of one of the following manufacturers that meet or exceed the requirements specified:

1. Ringside; Lenexa, KS 66215.
2. Everlast; Bronx, NY 10454
3. approved equal.

2.9.2 General:

Boxing equipment bags shall be black unless required otherwise. Chains shall be zinc galvanized with bright finish. Supporting framing shall be steel with shop painted semi-gloss black finish. Provide all anchors, ties, inserts and the like required for proper functioning of equipment.

2.9.3 Punching Bags:

Provide where indicated punching bags. Punching bags shall be 16 inch diameter by 48 inches long, 135 pound weight, hand filled leather (cow hide), Ringside Model LLHB-135 or approved equal. Provide each punching bag with swivel, chain and steel hanger suitable for securing punching bag to overhead steel beams indicated, Ringside Model HBH-1 or approved equal. Provide each punching bag with additional chain length to permit bag to hang at proper height and be supported by overhead steel beams indicated.

2.9.4 Uppercut Bags:

Provide where indicated uppercut bags. Uppercut bags shall be 18 inch diameter by 36 inches long, 55 pound weight, 20 ounce canvas, filled, Ringside Model UB or approved equal. Provide each uppercut bag with steel wall mount, Ringside Model HBH-5 or approved equal. Wall mount shall be mounted with bag attachment connection at 8 to 9 feet above finished floor as directed by contracting officer. Provide each uppercut bag with swivel and chain length to permit bag to hang at proper height and be supported by wall mount.

2.9.5 Speed Bag Platforms:

Provide where indicated speed bag platforms. Speed bag platforms shall be black painted 11 gauge steel with unfinished 30 inch diameter by 1.25 inch thick preservative treated wood disk and bag mounting swivel, Ringside Model PTWAP or approved equal. Speed bag platform shall be vertically adjustable without special tools. Wood wall plates shall be finished to match wall.

2.9.6 Double End Bags:

Provide where indicated double end bags. Double end bags shall be Ringside Model DEB series, 9 inch diameter or approved equal. Bag shall be alternating red and black leather panels with related straps and hooks. Provide each double end bag with steel wall mount, Ringside Model HBH-5 or approved equal, and with floor anchor, Ringside Model HBH-6 or approved equal.

2.9.7 Boxing Rings:

Provide where indicated on the drawing boxing rings. Boxing rings shall be Ringside Model CFR-20 or approved equal, providing 16 feet inside ropes. Provide two white corner posts, one red corner post, one blue corner post, full perimeter three rope system with all turnbuckles, hardware and rope covers, canvas ring cover, 1 inch thick EVA foam padding, corner cushions, flush floor inserts to properly support and secure boxing ring equipment to floor. Ring shall be removable without special tools or equipment. Ring shall be USA Boxing Rules approved.

2.10 BALLET BARRE AND BRACKETS

Provide where indicated ballet barres with brackets. Ballet barres and brackets shall be double rail, fixed height type, Model MS-02135 as manufactured by Gibson, Inc., Englewood, CO 80150 as modified below. Barre rails shall be Select White Maple, 1.5 inches in diameter, unfinished. Rails shall have rounded ends and shall be joined to form continuous lengths required. Joints shall be dowel screwed and glued. Provide rails with double rail, fixed height, formed steel flat bar brackets with chrome finish. Provide brackets at each end of barres and at 8 feet on center maximum. Brackets shall be configured to fully capture rails. Bottom rail shall extend 4 inches from wall and top rail shall extend 6 inches from wall and be 8 inches from bottom rail. Where brackets are to be mounted on walls with mirror, wall surface shall be painted flat

black and mirrors on each side of joint shall be equally cut to fit around bracket with uniform 1/4 inch gap.

2.11 ELECTRICAL WORK

Provide all necessary electrical work including receptacles, junction boxes, wiring, conduit and the like to provide proper electrical power to winches, safety devices, controls and the like. Electrical work shall be in conformance with NFPA 70 and the requirements of section 16415 ELECTRICAL WORK, INTERIOR. Provide cover plates for ganged key switches as required. Cover plates shall have machine engraved identification of 24 alpha-numeric characters, not less than 1/4 inch high, for each item controlled. Confirm item identification with Contracting Officer before engraving. All keyed switches within a room shall be keyed alike.

PART 3 EXECUTION

3.1 EXAMINATION

Examine substrates, areas, and conditions, with Installer present, for compliance with requirements for play court layout, alignment of mounting substrates, installation tolerances, operational clearances, accurate locations of connections to building electrical system, and other conditions affecting performance.

1. Verify critical dimensions.
2. Examine supporting structure and below finished floor for subgrades, subfloors and footings.
3. Examine wall assemblies, where reinforced to receive anchors and fasteners, to verify that locations of concealed reinforcements have been clearly marked for installers. Locate reinforcements and mark locations if not already done.

Proceed with installation only after unsatisfactory conditions have been corrected.

3.2 INSTALLATION

3.2.1 General:

Comply with manufacturer's written installation instructions and competition rules indicated for each type of athletic equipment. Athletic equipment shall be fabricated and assembled to extent possible before installation. Complete field assembly as required.

Unless otherwise indicated, install gymnasium equipment after other finishing operations, including painting, have been completed.

3.2.2 Permanently Placed Athletic Equipment and Components:

The contractor shall install each item of athletic equipment rigid, level, plumb, square, and true; anchored securely to supporting structure; positioned at locations and elevations indicated on the Shop Drawings or as indicated in the Documents; in proper relation to adjacent construction;

and aligned with court layouts. Floor anchors/inserts/ plates shall be installed flush with finished floor.

1. Floor Insert Location: Coordinate location with application of game lines and markers.

2. Floor Insert Elevation: Coordinate installed heights of floor insert with installation and field finishing of finish flooring and type of floor plate.

3. Operating Athletic Equipment: Verify clearances for movable components of athletic equipment throughout entire range of operation and for access to operating components.

3.2.3 Anchoring to In-Place Construction:

Use anchors and fasteners where required for securing built-in and permanently place athletic equipment to structural support and supplemental framing and for properly transferring load to in-place supporting construction. Nails shall not be used.

3.2.4 Connections:

Connect operating devices to building electrical system and controls.

3.2.5 Wall Safety Pads:

Provide wall padding at heights indicated, or if not indicated, 5 inches above finished floor. Abut panels with 1/8 inch maximum gap. Align panel top and bottom edges. Panels shall be factory or field cut to fit area indicated. Provide cut edges formed and finished as required above. Provide equal end panels of not less than 12 inches width in each panel run. Provide cut-outs as required. Mount continuous Z channels tightly to wall extending full panel run less 1 inch at each end. Mount panels to Z channel with matching Z clips properly engaged.

3.2.6 Wrestling Mats:

Wrestling mats shall be laid out where required and allowed to relax to flat before adjusting to location required. Do not install mats until all other work is completed.

3.2.7 Boxing Equipment

Boxing equipment shall be installed with all related components. Hang all bags with required chains and swivels. Confirm boxing ring anchoring with Contracting Officer before installation. Install boxing ring with posts, ropes, pads, and all required accessories in orientation directed by Contracting Officer.

3.2.8 Ballet Barre and Bracket

Ballet barre and brackets shall be installed where required. Coordinate bracket locations with installation of mirrors. Join rail sections with

tight joints fully aligned and without protruding edges. Rail shall be sanded as for transparent finish in accordance with Section 09900 PAINTING, GENERAL, but shall be remain unfinished.

3.3 TESTING AND ADJUSTING

Test each item of athletic equipment for proper operation through complete cycle of movement. Adjust movable components of athletic equipment to operate safely, smoothly, easily and quietly, free from binding, warp, distortion, non-alignment, misplacement, disruption or malfunction, throughout entire operational range. Lubricate hardware and moving parts.

Portable items shall be fully assembled and installed with all accessories required. Adjust anchors/inserts/floor plates to provide proper engagement and alignment of components and to permit proper removal of equipment for storage. Portable items shall be removed and stored in building as directed by the Contracting Officer.

3.4 CLEANING

After completing athletic equipment installation, inspect components. Remove spots, dirt, and debris and touch up damaged shop-applied finishes according to manufacturer's written instructions. Damaged leather, fabric or net items shall not be patched or otherwise repaired, but shall be replaced.

Provide final protection and maintain conditions acceptable to manufacturer and installer that ensure athletic equipment in without damage or deterioration at time of Substantial Completion.

Replace athletic equipment and finishes that can not be cleaned and repaired, in a manner approved by the Contracting Officer, before time of Substantial Completion.

3.5 DEMONSTRATION AND TRAINING

Engage factory-authorized service representatives to train Government personnel to adjust, operate, and maintain each item of athletic equipment. Use Operation and Maintenance manual as basis for training. Provide sufficient training time to completely cover all equipment, but not less than six (6) hours. Video tape training in VHS format, recorded and prepared by a professional video taping service acceptable to the Contracting Officer.

-- End of Section --

SECTION 11482

SCOREBOARDS AND TIMING SYSTEMS

PART 1 GENERAL

1.1 REFERENCES

The publications listed below form a part of this specification section to the extent referenced. The publications are referred to in the text by basic designation only.

FEDERATION INTERNATIONALE DES LUTTES ASSOCIEES (FILA)

FILA Rules	(1999) International Rules of Wrestling

NATIONAL COLLEGIATE ATHLETIC ASSOCIATION (NCAA)

NCAA Basketball Rules	(2000) Basketball Men's and Women's Rules and Interpretations
NCAA Wrestling Rules	(2000) Wrestling Rules and Interpretations

NATIONAL FIRE PROTECTION ASSOCIATION (NFPA)

NFPA 70	(1999) National Electric Code

UNITED STATES AMATEUR BOXING, INCORPORATED (USA Boxing)

USA Boxing Rules	Official Rules

UNITED STATES VOLLEYBALL ASSOCIATION (USVA)

USVA Rules	(1999-2000) Official United States Volleyball Rule

1.2 SUBMITTALS

Government approval is required for submittals with a "GA" designation; submittals having an "FIO" designation are for information only. The following shall be submitted in accordance with Section 01330 SUBMITTAL PROCEDURES:

SD-01 Data

Scoreboard Systems; GA.

Submit manufacturer's printed product data, specifications, standard details, installation instructions, use limitations and recommendations for each scoreboard and timing system component used. Provide certifications

that materials and systems comply with specified requirements.

SD-04 Drawings

Scoreboard Systems; GA.

Provide large scale shop drawings for fabrication, installation and erection of all parts of the work. Provide plans, elevations, and details of anchorages, connections and accessory items. Provide installation templates for work installed by others. Show all interfaces and relationships to work of other trades.

Field Measurements: Take all necessary field measurements before preparation of shop drawings and fabrication to the greatest extent possible. Do not delay progress of the job. If field measurements are not possible prior to fabrication, allow for field cutting and fitting.

SD-19 Operation and Maintenance Manuals

Scoreboard Systems; FIO.

Submit in accordance with the requirements of Section 00800 SPECIAL CONTRACT REQUIREMENTS detailed instructions indicating operation of each scoreboard system item and timing system item and proper and recommended maintenance and cleaning instructions. Include as-built electrical wiring and control diagrams for each system. Include video tape of training.

1.3 WORK INCLUDED

Furnish and install electronic scoreboard and timing systems as indicated on the Drawings and as specified herein. Include all testing and adjustments required and instructions to Owner's operating personnel. Scoreboard and timing systems required include the following:

1. Competition quality scoreboard systems for Volleyball/Basketball;
2. Recreation quality scoreboard systems for Volleyball/Basketball;
3. Basketball shot clocks mounted on basketball backstops;
4. Boxing timing clock;
5. Aquatics Scoreboard systems;
6. Pace clocks at swimming pools;
7. Boxing scoreboard systems.
8. Wrestling scoreboard systems
9. Commissioning of Scoreboard systems.

1.4 RELATED WORK

Examine Contract Documents for requirements that affect Work of this Section. Other Specification Sections that directly relate to Work of this Section include, but are not limited to:

1. Section 03300, CAST-IN-PLACE CONCRETE.
2. Section 04200, MASONRY; Concrete masonry unit walls
3. Section 05400 COLD-FORMED METAL FRAMING
4. Section 05500 MISCELLANEOUS METAL

5. Section 09640 WOOD STRIP FLOORING
6. Section 09900 PAINTING, GENERAL
7. Section 11480 ATHLETIC EQUIPMENT
8. Section 16415 ELECTRICAL WORK, INTERIOR
9. Section 16800 CENTRAL PAGING SYSTEM, SOUND SYSTEMS AND AUDIO-VISUAL SYSTEMS

1.5 QUALITY ASSURANCE

1.5.1 Applicable Standards

Equipment shall conform to the applicable rules and specifications of the referenced standards specified above, including FILA Rules, NCAA Basketball Rules, NCAA Wrestling Rules, NFPA 70, USA Boxing Rules, and USVA Rules, as applicable.

1.5.2 Source:

For each product or material type required for work of this Section, provide primary materials that are products of one manufacturer. Provide secondary or accessory materials that are acceptable to manufacturers of primary materials.

1.5.3 Installer:

Installers shall be trained and experienced in the installation of scoreboard and timing systems of the type specified herein. Supervisory personnel shall have not less than five (5) years direct experience. Installer shall be acceptable to manufacturer of primary materials.

1.5.4 Electrical Components, Devices and Accessories:

All electrical components, devices and accessories shall be listed and labeled as defined in NFPA 70, Article 100, by a testing agency acceptable to Contracting Officer, and marked for intended use.

1.5.5 Environmental Limitations:

Do not install scoreboard and timing systems until spaces are permanently enclosed and weatherproof, wet work in spaces, including painting, is complete and dry, and ambient temperature and humidity conditions are maintained at the levels required for the Project when occupied for intended use.

1.5.6 Field Measurements:

Coordinate layout and installation of supplemental framing for supported scoreboard and timing systems with other construction that penetrates ceilings or is supported by them, including electrical work, light fixtures, mechanical work including air distribution materials, fire-suppression system work and partition assemblies.

1.6 DELIVERY, STORAGE AND HANDLING

Deliver materials and products in unopened, factory labeled packages. Store and handle in strict compliance with manufacturer's instructions and recommendations. Materials and products shall be stacked and stored indoors under covers in such a manner as to provide proper ventilation, and protection. Materials which become damaged shall be replaced with new items.

Sequence deliveries to avoid delays, but minimize on-site storage.

1.7 WARRANTIES

Provide written manufacturer's warranties in Government's name for each material, and component of scoreboard and timing systems furnished under this Section where such warranties are offered in published product data, in addition to, and not instead of, other liabilities established by law and other provisions of Contract Documents.

Include, but do not limit to, standard manufacturer's warranties for the following systems and components:

1. Computer/control consoles
2. Printers
3. Touchpads
4. Scoreboards and displays
5. Loudspeaker systems and microphones
6. Cameras
7. Electronic starting and timing system
8. Receptacles, connectors, cable, and accessories.

PART 2 PRODUCTS

2.1 GENERAL

One or more manufacturer's names and catalogue numbers are listed for each item specified below. These names and catalogue numbers are listed to set the standard of quality, functionality and design required. Provide the specified item, or an equal product in appearance and performance from another manufacturer which meets or exceeds the standard of quality, functionality, and design as judged solely by the Contracting Officer.

2.2 SUPPLEMENTAL WALL FRAMING

Provide additional framing concealed in wall systems to properly support scoreboard and timing systems. Additional framing shall include blocking, cold-formed metal framing in accordance with the requirements of section 05400 COLD-FORMED METAL FRAMING, grouted and reinforced cores in concrete masonry units in accordance with section 04200 MASONRY, and the like.

2.3 AQUATIC SCOREBOARD AND TIMING SYSTEMS

Provide in room Z020 INTRAMURAL POOL aquatic scoreboard and timing systems specifically designed for use at indoor intramural swimming pool. Locate components of system where indicated, or where not indicated, as directed by contracting officer. Aquatic scoreboard and timing systems shall be by

one manufacturer for all components.

2.3.1 Aquatic Scoreboard

Provide aquatic scoreboard where indicated. Aquatic scoreboard shall be fourteen (14) line multi-sport scoreboard, Model 4009-SB-MS as manufactured by Colorado Time Systems, Inc., Loveland, CO 80539, or approved equal, and as follows:

1. Provide scoreboard modules with face, edge, and rear housing of 12 gauge aluminum with heli-arc welded joints painted black. Scoreboard components shall be modular type to permit easy removal/replacement. Score board shall be 204 inches wide, 154 inches high by 5.25 inches deep over all composed of 102 inch wide by 14 inch high by 5.25 inch deep modules. Provide wall mounting system.

2. Scoreboard features shall be microprocessor controlled. Timing shall be quartz crystal solid state. Horn shall be manual or automatic operation.

3. Operable Text Lines: Scoreboard shall include 14 lines of eight (8) light reflective, seven (7) segment operable digits, 9 inches high with operable decimals and one operable colon. Fixed decimals or colons are not acceptable. Ten (10) operable text lines shall be for display of lane, place and time for 10 swimming lanes. One operable text line shall be for display of Home/Guest scores for Men. One Operable text line shall be for display of Home/Guest scores for Women. One operable text line shall be for display of Event/Heat. One operable text line shall be for display of Lengths/Records. Operable text shall be yellow on black background. Each operable text line shall have internal data selector switch to permit user selection of data codes. Data codes shall be user adjustable from the scoreboard or timer console. Each line of operable text shall have individual internal power supply and individual control circuits which shall limit loss of data to one line during malfunctions and to permit independent line use. Operable text lines shall permit digits to be slid within housing to permit reformatting. Digits shall move freely without use of tools. Operable text lines shall be capable of operating at 2400 and 9600 baud.

4. Fixed text Lines: Scoreboard shall include fixed text lines for identification of each function (home, guest, men, women, event, heat, length, record, lane, place and time). Fixed text shall be yellow text on black background.

5. Customized Panel: Scoreboard shall include 102 inch wide by 14 inch high customized panel with "UNITED STATES MILITARY ACADEMY" in 12 inch high text. Customized panel shall be white with black silk screen painted, or equal, text.

6. Manufacturer's Identification: Manufacturer's identification shall be text only, and shall not cover an area larger than 6

inches high by 18 inches wide overall. Manufacturer's identification shall be yellow to match other scoreboard text or white. Manufacturer's identification shall not be located on customized panel noted above.

7. Scoreboard shall be 115 V AC, 2 amp, 250 watts maximum per module.

2.3.2 Timer Console

Provide each score board with timer console. Timer console shall be Model SYS5 as manufactured by Colorado Time Systems, Inc., Loveland, CO 80539, or approved equal, and as follows:

1. Timer console housing shall be impact resistant plastic with removable flexible plastic keyboard inserts for swimming and water polo with related software. Housing shall be beige. Provide padded carrying case for timer console.

2. Timer console shall include 2,000 character LCD display with "windows" format.

3. Timer console shall provide built-in clock/calendar, selectable timing resolution of 0.01 or 0.001 second with a timing range of 0 to 99:59.999, selectable lane or place finish display, race and lane status display, touch pad status, lane arming status and on screen battery gauge. Race splits shall be printed as they occur. Timer console software shall be user customized and internally saved. Provide per lane push button backup timing. Provide water polo program with shot clock control (reset/on/off/edit), game time (start/stop/edit), penalty times (start/edit/clear) per team, team scores (+1, -1), manual horn, and time edit.

4. Timer Console Software: Timer console shall be fully compatible with IBM or compatible computers. Timer console shall be fully compatible with aquatic scoreboard indicated above. Provide race software with meet memory of 500 or more races with split and backup times which shall be recallable for later review, posting to scoreboard or and printing. Provide backup timing via push button on a per lane basis. Provide relay judging software and relay print out showing early and late relay exchanges. Provide self-diagnostic program which shall run circuitry checks on system peripheral components including cable harness, touchpads, push buttons, and scoreboard cable. System shall indicate to operator when system has successfully passed or if a failure exists, and shall identify what and where the failure is.

5. External Ports: Provide parallel port for external parallel printer interface; serial RS-232 port for meet input/output; computer communications port, scoreboard output port, Start/Stop end (near end) cable harness input ports for touchpads, Button A, Button B, and Button C inputs; relay judging inputs; turning end (far end) cable harness input port; Peripherals expansion port (for other sports); and External DC power port.

6. Provide 10 lane cable harness for touchpads and one button input per lane, vacuum pump and touch pad meter.

7. Timer console shall have internal power source of eight (8) D cell alkaline batteries and alternate wall transformer to 120 V AC power.

2.3.3 Touchpad System

Provide each score board with touchpad system. Touchpad system shall include eleven (11) Model TP-78G series touch pads as manufactured by Colorado Time Systems, Inc., Loveland, CO 80539, or approved equal, and as follows:

1. Touchpads shall be 78 inches wide by 22 inches high and 0.3 inches thick. Touchpads shall be all plastic exterior with metal exposed only for electrical connectors. Touchpads shall have non-abrasive, uniform fine grit surface.

2. Touchpads shall have contrasting colors with 2 inch wide black border and black end wall cross pattern for portion covered by touchpad.

3. Provide one custom fabricated bracket for each touchpad for mounting of touchpad system on Intramural Pool (Room Z020) and Instructional Pool (room Y040) gutters. See SP series drawings for gutter configurations. Brackets shall be plastic with hook-and-loop type fastening system to touchpads. Brackets and touchpads shall not required attachment to pool/gutter surfaces.

4. Provide cable harness for ten (10) lanes with single button input at each lane. Provide vacuum pump required for proper operation of 10 lane touchpad system. Provide touchpad meter.

5. Provide storage caddy for touchpads. Storage caddy shall be all aluminum, configured to permit free drainage and air flow, with four swivel rubber casters. Caddy shall have capacity to store 12 touchpads as indicated above.

2.3.4 Start System

Provide each score board with start system. Start system shall include Model INF-SSM main start system speaker unit as manufactured by Colorado Time Systems, Inc., Loveland, CO 80539, or approved equal, and as follows:

1. Main start system speaker unit shall have start module, internal moisture and corrosion resistant 40 watt speaker, wire microphone with start button and 5o feet of cable, internal gel-cell battery with charger, and external 360 degree visibility strobe. Start module shall be capable of initiating race start tone and interfacing with timing system noted above. Provide additional (backup) gel-cell battery and charger.

2. Start system shall have an additional remote speaker with 125 feet of cable with connections to main start system speaker unit.

3. Provide main and remote start system speakers with tripods for free standing on pool deck.

4. Provide 25 foot jumper cable for start system.

2.3.5 Relay Judging Platform System

Provide for each touchpad relay judging platform system. Relay judging platform system shall include Model RJP series relay judging platforms as manufactured by Colorado Time Systems, Inc., Loveland, CO 80539, or approved equal, and as follows:

1. Relay judging platform shall be nominal 19.625 inches long by 19.625 inches wide by 0.375 inches thick. Relay judging platforms shall be strap mounted to starting blocks required. Relay judging platform shall have non-skid surface and shall have top and front edge sensitivity to swimmer's push off, but shall not be sensitive to weight shifts.

2. Relay judging platforms shall detect electronically when swimmer has left starting block relative to incoming swimmers touch of the touchpad. Timing accuracy shall be 0.01 seconds.

2.3.6 Deck Plate System

Provide in room Z020 Intramural Pool deck plate system. Deck plate system shall include Model DP7 series deck plates as manufactured by Colorado Time Systems, Inc., Loveland, CO 80539, or approved equal, and as follows:

1. Deck plates shall be 7.5 inch by 7.5 inch for flush installation on pool deck. Deck plates shall have connections for touchpads; A, B and C buttons; backup buttons, start speakers; and start transducers. Note that not all connections shall be used in the complete and operational system.

2. Provide one deck plate at each deck plate outlet box indicated on the E series drawings. Coordinate deck plate to fit deck plate outlet box size indicated.

3. Provide cable lengths as required to properly connect to wall plate system indicated below. Cables shall be run below pool deck in conduit to wall plate system.

2.3.7 Wall Plate System

Provide in room Z020 Intramural Pool wall plate system. Wall plate system shall include Model WLP series wall plates as manufactured by Colorado Time Systems, Inc., Loveland, CO 80539, or approved equal, and as follows:

1. Wall plates shall have 15 inches wide by 15 inches high by 0.25 inch thick black polycarbonate face. Wall plate shall have face

connections for timing system components required, including start system, micro phone, timer console, and the like) for a complete swimming/water polo scoreboard and timing system.

2. Back of face shall be pre-wired with terminal connections required.

3. Provide one wall plate at each wall plate pull box indicated on the E series drawings. Coordinate wall plate to fit wall plate pull box size indicated.

2.3.8 Water Polo Shot Clock System

Provide in room Z020 Intramural Pool water polo shot clock system. Water polo shot clock system shall include Model SC series shot clocks as manufactured by Colorado Time Systems, Inc., Loveland, CO 80539, or approved equal, and as follows:

1. Provide two shot clocks. Shot clocks shall be portable 36 inches wide by 16 inches high by 4 inches deep single sided panels suitable for pool deck use. Panels shall be aluminum with polycarbonate digit cover. Panels shall be two module system with 12 volt batteries with charger, two 40 watt speakers/horns and floor stands.

2. Shot clocks shall display two digit count down from 35 to 0 in light reflective, seven (7) segment operable digits, 9 inches high in fluorescent yellow.

3. Shot clocks shall be controlled by timer console and fully compatible with scoreboard and timing system components.

4. Provide 100 foot cable length between each clock and 100 foot cable length between timer console and clock.

2.3.9 Training Timing System

Provide in room Z020 Intramural Pool training timing system. Training timing system shall be Quick Start System as manufactured by Colorado Time Systems, Inc., Loveland, CO 80539, or approved equal, and as follows:

1. Training timing system shall include pace clock. Pace clock shall be 12 inches wide by 8 inches high by 4 inches deep suitable for pool deck use. Pace clock shall have 4 character display of 4 inch high LEDs, which shall count from 99:99 to 0.

2. Pace Clock shall operate on user selectable internal power supply of 8 D-cell alkaline batteries or 120 V AC power. Provide low battery indicator.

3. Pace clock shall be capable of independent functioning as pace clock. Pace clock shall include four (4) ports for functioning with other timing system components. Provide all cabling, connections, interfaces and components required to properly integrate pace clock with timer console, start system, relay

judging platforms, and push buttons.

4. In addition to ports required above for integration of other timing system component, provide software and ports for downloading of training times to standard PC log file.

2.4 AQUATIC TIMING SYSTEM PREPARATIONS

Provide in room Y040 INSTRUCTIONAL POOL timing system preparations specifically designed for use at indoor instructional swimming pool. Timing system preparations shall be by the same manufacturer as the aquatic scoreboard and timing system noted above.

2.4.1 Deck Plate System

Provide in room Y040 Instructional Pool deck plate system. Deck plate system shall include Model DP7 series deck plates as manufactured by Colorado Time Systems, Inc., Loveland, CO 80539, or approved equal, and as follows:

1. Deck plates shall be 7.5 inch by 7.5 inch for flush installation on pool deck. Deck plates shall have connections for touchpads; A, B and C buttons; backup buttons, start speakers; and start transducers. Note that not all connections shall be used in the complete and operational system.

2. Provide one deck plate at each deck plate outlet box indicated on the E series drawings. Coordinate deck plate to fit deck plate outlet box size indicated.

3. Provide cable lengths as required to properly connect to wall plate system indicated below. Cables shall be run below pool deck in conduit to wall plate system.

2.4.2 Wall Plate System

Provide in room Y040 Instructional Pool wall plate system. Wall plate system shall include Model WLP series wall plates as manufactured by Colorado Time Systems, Inc., Loveland, CO 80539, or approved equal, and as follows:

1. Wall plates shall have 15 inches wide by 15 inches high by 0.25 inch thick black polycarbonate face. Wall plate shall have face connections for timing system components required, including start system, micro phone, timer console, and the like) for a complete swimming/water polo scoreboard and timing system.

2. Back of face shall be pre-wired with terminal connections required.

3. Provide one wall plate at each wall plate pull box indicated on the E series drawings. Coordinate wall plate to fit wall plate pull box size indicated.

4. Wall plate shall provide connections for aquatic timing system

timer console, touchpad system, start system, relay judging platform system, training timing system as indicated above.

2.5 AQUATIC PACE CLOCKS

Provide where indicated aquatic pace clocks. Aquatic pace clocks shall be surface mount wall pace clocks, Model 92-500, as manufactured by Recreonics, Inc., Louisville, KY 40213, or approved equal, and as follows:

1. Polyethylene case, octagon shape, 31 inches overall, with shatterproof polyethylene lens, suitable for wall mounting. Case and dial shall be white.

2. Black painted aluminum minute hand and red painted sweep second hand.

3. 60 second/minute dial with black painted numerical markings in five (5) second/minute increments from 5 to 60, red five (5) second/minute marks, and black one (1) second/minute marks.

4. Electric quartz movement with 18 foot cord with start/stop switch for 110 V AC power.

2.6 COMPETITION QUALITY BASKETBALL/VOLLEYBALL SCOREBOARD SYSTEMS

Provide where indicated competition quality basketball/volleyball scoreboard systems. Competition quality scoreboard systems shall be model 9765PF as manufactured by Everson, Inc., Yorkville, NY 13495, or approved equal, and as follows:

1. Provide scoreboard with face, side, and rear housing of 12 gauge aluminum with heli-arc welded joints painted black. Scoreboard interior components shall be modular type to permit easy removal/replacement. Digits shall be metal surrounded. Score board shall be 14.5 feet wide, 5 feet high and 3 inches deep over all. Main scoreboard shall be 8 feet wide by 5 feet high by 3 inches deep. Two (2) side panels, mounted at each side of main scoreboard, shall be 3.25 feet wide by 5 feet high by 3 inches deep. Provide wall mounting brackets.

2. Scoreboard features shall be microprocessor controlled. Timing shall be quartz crystal solid state. Horn shall be manual or automatic operation.

3. Main scoreboard shall include 0:00-99.59 up/down timing, 0-199 home/guest score, 0-9 home/guest fouls, player number, player fouls, all in 12 inch high LED digits, 1/10 second last minute timing, possession indicator, bonus indicator, four (4) period indicators, and horn. Side panels shall have five (5) player lines for 0-99 player number, 0-9 fouls, 0-99 points, all in 6 inch high LED digits. LED color shall be red. Provide back lighted text identifying each function/team on scoreboard face (fouls, home, guest, possession, bonus, and the like).

4. Provide each scoreboard with control console with stainless steel face and LCD readout. Control console keypad shall feature audible beep entry with on-screen prompts for user entry. LCD readout shall show time 0-99:59.9, score and shot clock. Control console shall be low-voltage operated. Control console shall be capable of simultaneously operating basketball shot clocks as specified below.

5. Scoreboard shall be 120 V AC operated. Scoreboard shall include AC transformer/adapter for control console voltage.

6. Provide all software, cabling, receptacles, plugs, and the like as required for a complete, properly operating system.

2.7 RECREATION QUALITY BASKETBALL/VOLLEYBALL SCOREBOARD SYSTEMS

Provide where indicated recreation quality basketball/volleyball scoreboard systems. Recreation quality scoreboard systems shall be model 2540 as manufactured by Nevco Scoreboard Co., Greenville, IL 62246, or approved equal, and as follows:

1. Provide scoreboard with face, side, and rear housing of 12 gauge aluminum with heli-arc welded joints painted black. Scoreboard interior components shall be modular type to permit easy removal/replacement. Digits shall be metal surrounded. Score board shall be 12 feet wide, 4 feet high and 8 inches deep over all. Provide wall mounting brackets.

2. Scoreboard features shall be microprocessor controlled. Timing shall be quartz crystal solid state. Horn shall be manual or automatic operation.

3. Scoreboard shall include 0:00-99.59 up/down timing and 0-199 home/guest score. Last minute of period shall count down in 1/10 seconds. Time and team scores shall be 18 inch high LED digits. Time indicator color shall be red. Team score indicators shall be orange. Period indicator shall be 13 inch high LED. Period indicator color shall be orange. Provide bonus and possession indicators. Provide backlighted "Home" and "Guest" identifiers in 6 inch high text, "Bonus" and "Poss." indicators in 4 inch high text and "Period" in non-illuminated 6 inch high changeable letters.

4. Provide each scoreboard with control console of grey break resistant plastic with dot-matrix LED display. Control console keypad shall feature audible beep entry with on-screen prompts for user entry. LCD readout shall show time 0-99:59.9, score and shot clock. Control console shall be capable of simultaneously operating basketball shot clocks as specified below. Provide control console carrying case.

5. Scoreboard and control console shall be 120 V AC operated.

6. Provide all software, cabling, receptacles, plugs, and the like as

required for a complete, properly operating system.

2.8 BASKETBALL SHOT CLOCK SYSTEMS

Provide basketball shot clock systems where indicated. Basketball shot clock system shall be Model LS-5 as manufactured by Sportable Scoreboards, Inc., Murray, KS 42071, or approved equal, and as follows:

1. Provide shot clocks with face, side, and rear housing of aluminum with welded joints, painted black. Digits shall be metal surrounded. Shot clocks shall be 24 inches wide, 22 inches high and 6 inches deep over all. Provide mounting brackets for backstop mounting.

2. Shot clock features shall be controlled by competition quality and recreation quality scoreboard control consoles as specified above at the respective courts.

3. Shot clocks shall have 12 inch high digits and top mounted buzzer horns.

4. Shot clocks shall be 120 V AC operated.

5. Shot clocks shall be installed on basketball backstops which are specified in section 11480 ATHLETIC EQUIPMENT. Provide mounting system for installation of shot clock of center strut.

6. Provide all software, cabling, receptacles, plugs, and the like as required for a complete, properly operating system.

2.9 BOXING TIMERS AND DIGITAL DISPLAYS

2.9.1 Boxing Timers

Provide boxing timers at each boxing ring. Boxing timers shall be Sparmate Model SM as manufactured by Ringside, Lenexa, KS 66215, or approved equal, and as follows:

1. Boxing timer shall have metal housing, painted black, with face mounted on/off power switch, user selectable two (2) or three (3) minute round length and 30 second or 60 second rest period length. Top of housing shall have three (3) lighted indicators. Indicators shall be for work cycle, rest period and 30 second end-of-round warning. Lighted indicators shall have molded plastic lenses with integral coloring. Housing shall have internal whistle for end-of-round warning and 3 second bell.

2. Boxing timers shall be 120 V AC.

3. Provide wall mounted shelf for each boxing timer as manufactured by boxing timer manufacturer.

2.9.2 Digital Displays

Provide digital displays at each boxing ring. Digital display be by same manufacturer as boxing timer indicated above. Digital displays shall be Digital Sparmate Model DSM, as manufactured by Ringside, Lenexa, KS 66215, or approved equal, and as follows:

1. Digital displays shall have metal housing, painted black, with face mounted on/off power switch, user selectable two (2) or three (3) minute round length and 30 second or 60 second rest period length. Face of housing shall have 3.5 inch high lighted numbers for work period countdown from 3:00 to 0:00. Colon shall flash green during work cycle, red during rest period and yellow during 30 second end-of-round warning. Housing shall have internal whistle for end-of-round warning.

2. Digital displays shall be 120 V AC.

3. Provide wall mounted shelf for each digital display as manufactured by digital display manufacturer.

2.10 BOXING SCOREBOARD SYSTEM

Provide boxing scoreboard system at each boxing ring. Boxing scoreboard system shall be Model 9650 as manufactured by Eversan, Inc., Yorkville, NY 13495, or approved equal, and as follows:

1. Provide scoreboard with face, side, and rear housing of aluminum with welded joints painted black. Scoreboard interior components shall be modular type to permit easy removal/replacement. Digits shall be metal surrounded. Score board shall be 74 inches long, 22 inches high and 2 inches deep over all. Provide wall mounting bracket .

2. Scoreboard features shall be microprocessor controlled. Timing shall be quartz crystal solid state. Horn shall be manual or automatic operation.

3. Scoreboard shall include 0:00-99.59 up/down timing and 0-99 home/guest score, in 10 inch high red LED digits, 1/10 second last minute timing, possession indicators, bonus indicators, four (4) period indicators, and horn. Provide backlighted text identifying each function/team on scoreboard face (home, guest, period, possession, and the like).

4. Provide each scoreboard with control console with stainless steel face. Control console keypad shall feature push button programming controls for boxing. Provide 50 feet of cabling between control console and scoreboard.

5. Scoreboard shall be 120 V AC operated. Scoreboard shall include AC adaptor for control console voltage.

6. Provide all software, cabling, receptacles, plugs, and the like as required for a complete, properly operating system.

2.11 WRESTLING SCOREBOARD SYSTEM

Provide wrestling scoreboard system where indicated. Wrestling scoreboard system shall be Model 9650 as manufactured by Eversan, Inc., Yorkville, NY 13495, or approved equal, and as follows:

1. Provide scoreboard with face, side, and rear housing of aluminum with welded joints painted black. Scoreboard interior components shall be modular type to permit easy removal/replacement. Digits shall be metal surrounded. Score board shall be 74 inches long, 22 inches high and 2 inches deep over all. Provide wall mounting brackets.

2. Scoreboard features shall be microprocessor controlled. Timing shall be quartz crystal solid state. Horn shall be manual or automatic operation.

3. Scoreboard shall include 0:00-99.59 up/down timing and 0-99 home/guest score, in 10 inch high red LED digits, 1/10 second last minute timing, possession indicators, bonus indicators, four (4) period indicators, and horn. Provide backlighted text identifying each function/team on scoreboard face (home, guest, period, possession, and the like).

4. Provide each scoreboard with control console with stainless steel face. Control console keypad shall feature push button programming controls for wrestling. Provide 100 feet of cabling between control console and scoreboard.

5. Scoreboard shall be 120 VAC operated. Scoreboard shall include AC adaptor for control console voltage.

6. Provide all software, cabling, receptacles, plugs, and the like as required for a complete, properly operating system.

2.12 ELECTRICAL WORK

Provide all necessary electrical work including receptacles, connectors, connections, junction boxes, wiring, conduit and the like to provide proper electrical power to winches, safety devices, controls and the like. Electrical work shall be in conformance with the requirements of section 16415 ELECTRICAL WORK, INTERIOR.

PART 3 EXECUTION

3.1 EXAMINATION

The contractor shall examine substrates, areas, and conditions for compliance with requirements of court/sport/event layout, alignment of mounting substrates, installation tolerances, operational clearances, accurate location of connections to building electrical and to control systems, and other conditions affecting the performance.

1. Verify critical dimensions.

2. Examine supporting structure and below finished floor for subgrades, subfloors and footings.

3. Examine wall assemblies, where supplemental framing is required to anchors and fasteners, to verify that locations of concealed reinforcements have been clearly marked for installation. Locate reinforcements and mark locations not already done.

4. Verify readiness of floor boxes, junction boxes, conduit and the like to receive scoreboard and timing system work.

Proceed with installation only after unsatisfactory conditions have been corrected.

3.2 INSTALLATION

3.2.1 General:

Comply with manufacturer's written installation instructions and competition rules indicated for each type of scoreboard and timing system. Scoreboards and timing systems shall be fabricated and assembled to extent possible before installation. Complete field assembly as required.

Unless required otherwise, install scoreboards and timing systems after other finishing operations, including painting, have been completed.

3.2.2 Permanently Placed Scoreboards, Timing Systems and Components:

The contractor shall install each item of scoreboards and timing systems rigid, level, plumb, square, and true; anchored securely to supporting structure; positioned at locations and elevations indicated on the Shop Drawings or as indicated in the Documents; in proper relation to adjacent construction; and aligned with building features and court layouts as required. Verify clearances for movable components of scoreboard and timing systems and for access to operating components.

3.2.3 Anchoring to In-Place Construction:

Use anchors and fasteners where required for securing built-in and permanently place scoreboards and timing systems to structural support and supplemental framing and for properly transferring load to in-place supporting construction. Nails shall not be used.

3.2.4 Portable Scoreboards, Timing Systems and Components:

The contractor shall install each item of scoreboard and timings systems. Items which are portable shall be removed, neatly re-packed and moved to location within the facility for storage as directed by the Contracting Officer.

Portable components shall be installed and removed as noted above as required to permit all items of scoreboard and timing systems to be tested, adjusted and the Owner's personnel shall be trained.

3.2.5 Connections:

Connect operating devices to building electrical system and controls.

3.2.6 Boxing Timers and Digital Displays

Locate boxing timers and digital displays at each boxing ring as directed by contracting officer. Mount shelf securely to wall. Coordinate for proper location of electrical power for each item. Face controls shall be accessible and shall be not more than 72 inches above the finished floor.

3.3 TESTING AND ADJUSTING

Test each item of scoreboards and timing systems for proper operation through complete cycle of function. Adjust to operate properly, without disruption or malfunction, throughout entire functional range. Confirm operation of all audible and visual devices. Confirm proper lighting of all LED's and lamps.

Portable items shall be fully assembled and installed with all accessories required. Adjust frequency of wireless components to prevent interference with other operating systems in the building, including existing occupied areas. Portable items shall be removed, repacked and stored in building as directed by the Contracting Officer.

3.4 CLEANING

After completing scoreboard and timing systems installation, inspect components. Remove spots, dirt, and debris and touch up damaged shop-applied finishes according to manufacturer's written instructions. Polish glossy surfaces. Remove scratches from plastic face sheets.

Provide final protection and maintain conditions acceptable to manufacturer and installer that ensure scoreboards and timing systems are without damage or deterioration at time of Substantial Completion.

Replace scoreboard and timing system components and finishes that can not be cleaned and repaired, in a manner approved by the Contracting Officer, before time of Substantial Completion.

3.5 DEMONSTRATION AND TRAINING

Engage factory-authorized service representatives to train Government personnel to adjust, operate, and maintain each item of scoreboard and timing systems. Use Operation and Maintenance manual as basis for training. Provide sufficient training time to completely cover all equipment, but not less than six (6) hours. Video tape training in VHS format, recorded and prepared by a professional video taping service acceptable to the Contracting Officer.

-- End of Section --

SECTION 11491

RACQUETBALL COURTS

PART 1 GENERAL

1.1 SUBMITTALS

Government approval is required for submittals with a "GA" designation; submittals having an "FIO" designation are for information only. The following shall be submitted in accordance with Section 01330 SUBMITTAL PROCEDURES:

SD-01 Data

Product Data; GA.

Submit manufacturer's product data of all court materials, including panels, fastening system, walls, flooring, floor finish, and court hardware and accessories.

SD-04 Drawings

Shop Drawings; GA.

Shop Drawings: Submit to Contracting Officer for approval complete shop drawings of walls, ceilings, floors, doors, court accessories, and all related anchoring and connections, of each court type.

Submit specific data regarding fastening of panels to framing utilizing specified system.

SD-14 Samples

Panel Samples; GA.

Submit minimum 24 in. x 24 in. samples of wall panel, glass wall panel, fastening system, and flooring panel.

1.2 WORK INCLUDED

Provide all labor, materials, equipment, and services necessary to completely furnish and install the racquetball courts, complete as indicated on the Drawings and as specified herein.

Racquetball court work shall include, but is not limited to the following:

1. Walls (panels and studs).
2. Ceilings.
3. Wood Flooring.

4. Glass playing walls.
5. Doors.
6. Lighting system.
7. Anchors, adhesives, and accessories.
8. Lock boxes.
9. All other work required for complete court system.

1.3 RELATED WORK

Examine Contract Documents for requirements that affect work of this Section. Other Specification Sections that directly relate to work of this Section include, but are not limited to:

1. Section 03300, CAST-IN-PLACE STRUCTURAL CONCRETE; Concrete subflooring.
2. Section 04200, MASONRY.
3. Section 09250, GYPSUM WALL BOARD; Gypsum board substrate.
4. Section 09640, WOOD STRIP FLOORING; Resilient wood flooring for gymnasium and other areas.
5. Division 16 - ELECTRICAL; Electrical lighting system and controls.

1.4 QUALITY ASSURANCE

Installer: All work in conjunction with racquetball courts as indicated on the Drawings and as specified herein shall be installed by one specialty subcontractor.

1.5 PRODUCT DELIVERY, STORAGE, AND HANDLING

Cover and protect material in transit and at site. Material not properly protected and stored and which is damaged or defaced during construction shall be rejected.

No components or materials shall be delivered to the project site until building is completely enclosed and weathertight. The temperature and humidity must be maintained in proper accordance with manufacturers recommendations. Materials and components shall be stored in spaces provided by the Contractor. Store materials and components neatly, properly stacked and covered with plastic.

1.6 COORDINATION

Manufacturer shall be responsible for details and dimensions not controlled by job conditions and shall show on his shop drawings required field measurements beyond his control.

Coordinate with responsible trades to establish, verify and maintain field dimensions and job conditions.

1.7 JOB CONDITIONS

Installation of racquetball courts shall not be made when the building is especially cold and damp or hot and dry. Temperature and humidity shall be maintained during storage of court materials, installation of court

systems, and thereafter as follows:

1. Temperature Range: 65 degrees F. to 78 degrees F.
2. Humidity: Controlled between 40% and 60%, at all times.

Cover and protect all materials from damage by the weather or otherwise and exercise all precautions to have the same from injury. Take proper precautions to protect all finished surfaces over which or against racquetball courts must be installed. The repair or replacement of any damaged finished surface caused by the delivery and installation of the work included in this Section shall be paid by the Contractor.

1.8 WARRANTIES

Provide written manufacturer's warranties in Owner's name for materials furnished under this Section where such guarantees are offered in published product data, in addition to, and not instead of, other liabilities established by law and other provisions of Contract Documents.

1. Provide a warranty from manufacturer stating all panel materials shall be guaranteed for a period of ten years from date of installation.

2. Provide a warranty from manufacturer stating all glass walls shall be guaranteed for a period of five years from date of installation.

3. Warranties shall provide for repair or replacement of any material found defective in manufacture or any field labor damage and/or work not installed in accordance with approved shop drawings.

PART 2 PRODUCTS

2.1 GENERAL

Racquetball court construction shall be as indicated on the Drawings and as specified herein.

2.2 ACCEPTABLE MANUFACTURERS

Provide racquetball court products of the following manufacturers, or approved equal acceptable to Contracting Officer:

1. CRS Corporation, San Francisco, CA 9410
2. FiberResin Industries, Inc.; Oconomowoc, WI 53066.
3. The Court Company, Memphis, TN 38119

2.3 STEEL FRAMING

2.3.1 Walls:

Unless otherwise indicated on the Drawings, provide wall framing using 6 in., 18 gage minimum, galvanized steel C studs.

1. Space studs in front walls at 12 in. o.c., maximum.

2. Space studs at 16 in. o.c. maximum on side walls.
3. Supporting steel structure shall be free standing type.
4. All walls shall be plumb and vertical, maintaining the exact dimensions as shown on the Drawings and required for regulation size for racquetball courts.
5. Provide all required shimming of walls as required to the thicknesses indicated on the Drawings.

2.3.2 Ceilings:

Unless otherwise indicated on the Drawings, provide rigid galvanized framing system for ceiling using 6 in., 16 gage minimum, galvanized steel joists, placed 16 in. on center maximum.

1. Panels shall be pre-cut to receive the recessed lights.
2. Ceilings utilizing suspended suspension type system and hangers will not be permitted.

2.4 PANELS

2.4.1 Racquetball Court:

Panels shall be high impact plastic laminate applied to both sides of industrial grade high density particleboard core material, milled to an accurate 90-degree angle, and tongue and groove machined at the factory. Panel sheets shall be 4 ft. x 8 ft. and installed in a staggered configuration. High-pressure laminate shall be 0.050 in. thickness. Panel shall have a minimum density core of 65 lb. per cubic foot.

1. Front Wall Panels: Minimum 1-1/8 in. thick composite density. Panel shall have a minimum density core of 65 lb. per cubic foot.

2. Side Wall Panels: Minimum 13/16 in. thick composite density. Panel shall have a minimum density core of 60 lb. per cubic foot.

3. Ceiling Panels: Minimum 5/8 in. thick composite density. Panel shall have a minimum density core of 45 lb. per cubic foot.

2.4.2 Attachment:

Attach panels to steel stud system with S-12 wafer head screws and heavy bodied structural adhesive. Attach using proprietary precision tongue and groove system with construction adhesive also employed for fastening.

1. Adhesive: Construction adhesive equal to B. F. Goodrich UT 440 Adhesive, as recommended by the court manufacturer.
2. Fasteners: Concealed screws as recommended by the court manufacturer.

2.5 FLOORS

2.5.1 Concrete Substrate:

Concrete subfloor shall be furnished to the racquetball court installer

broom-clean and finished smooth, straight and level to where minimum tolerance is 1/8 in. to 10 ft. radius under the work of Section 03300, CAST-IN-PLACE CONCRETE.

1. Provide all additional grinding or leveling of concrete surfaces as required for court installation.

2.5.2 Wood Flooring System Manufacturer/Type:

Wood floors shall be a cushioned sleeper-plywood type system, 3-1/4 in. thick, manufactured by one of the following manufacturers , or approved equal acceptable to Owner and Contracting Officer:

1. Connor AGA Duracushion III System, manufactured by Conner AGA, Amasa, MI 49903;
2. Action Cush II, manufactured by Action Floor Systems, Inc., Mercer, WI 54547;
3. Permacushion III, manufactured by Robbins, Inc. Sport Surfaces, Cincinnati, OH 45226;

2.5.3 Installation:

Wood floors shall be installed according to their recommended procedures. Floors are to be solid throughout to provide a uniform bounce of the ball and to have color variations in the wood.

2.5.4 Vapor Barrier:

6 mil polyethylene, 0.1 perm rating. Tape all joints in vapor barrier.

2.5.5 Flooring Materials:

1. Northern Hard Rock Maple, 2-1/4 in. x 25/32 in. Second Grade and better, TGEM, MFMA Grade marked and stamped.

2. Lower subfloor: Pressure treated 2 in. x 3 in. sleepers Douglas Fir or Western Hemlock, with rubber pads attached 12 in. o. c.

3. Upper subfloor: 4 ft. x 8 ft. x 5/8 in. CDX plywood.

3. Pads: Duracushion pads 12 in. o.c., 3/8 in. thick, 2-1/4 in. x 3 in.

4. Fasteners: 2 in. barbed cleats or 2 in. epoxy-coated staples.

5. Lining: Game lines shall be painted of required colors and widths. Apply per recommendations of court manufacturer.

2.5.6 Floor Finish System:

1. Sanding: Wood flooring for racquetball courts shall be sanded per industry standards and as recommended by the court manufacturer.

2. Finish for Racquetball Courts: Sanded and sealed with two

applications of Court Time Oil; or approved equal.

2.5.7 Expansion Joint Material:

At joint where floor and wall panels meet, provide 3/4 in. cork at joint.

2.6 GLASS WALLS AND GLASS DOORS

2.6.1 Rear Panels:

Glass walls and doors for rear playing panel shall be 1/2 in. thick tempered safety glass panels, manufactured by or equal to one of the following:

1. Ellis Pearson Glasswall System, Distributed by W & W Products International, New York.
2. Altempco Glass Walls, manufactured by Altempco Glass Ltd., Arvado, CO 80001.
3. CRS Glasswall System, manufactured by CRS Corporation Glasswall Systems, San Francisco, CA 94103.

2.6.2 Materials and Accessories:

1. Glass panels up to 7 ft. - 0 in. AFF shall have a ceramic surface treatment applied to the playing side surface , partially pacifying the interior surface of the glass.

2. Glass panels shall have polished edges, countersunk holes, and cut-outs to accept special white nylon bushings and screws for attachment.

3. Glass connection fittings on play side shall be high tensile polyurethane, flush with glass.

4. Door Hardware: Positive locking system with knob on outside and flush pull ring inside.

5. Sealant: Clear silicone type sealant.

2.7 LIGHTS

Lights shall be manufactured by Devoe Systems, Abolite, Lithonia, or approved equal. Refer to Division 16 - ELECTRICAL.

2.8 COURT ACCESSORIES

Valuable Storage Compartments: Provide Valuable Storage Compartments equal to "Goody Boxes, manufactured by Stratford Industries, or approved equal. Install storage compartments at all racquetball courts.

PART 3 EXECUTION

3.1 INSTALLATION

Install racquetball courts complete in locations shown on the Drawings.

1. Racquetball courts shall be installed by qualified and authorized personnel of the manufacturer making certain courts are plumb level and square, and meet or exceed the requirements as established herein.

Apply vapor barrier to exterior walls and as underlayment for wood flooring using recommended adhesive with side and end joints sealed with vinyl tape.

Install rigid and braced wall and ceiling framing as detailed and as required for load and use conditions. Conform to the more stringent of manufacturer's recommendations and ASTM C 754.

Assemble panels, connect and secure to adjacent construction using adhesives and concealed mechanical fasteners through specialty concealed splines.

1. Follow manufacturer's instructions and recommendations.
2. Install accessories as required.

3. Fastening using a concealed metal spline system will not be permitted.

Assemble glass wall panels, stabilizers and anchors for rigid, plumb and square installation. Seal glass to glass joints with specified sealant; sealant shall be applied neatly using a minimum amount of sealant as required to complete the work. Mask off adjacent surfaces for a neat installation. Clean glass to remove sealants.

Install all court accessories and hardware as indicated or as required for a complete court installation.

3.2 CLEAN-UP

Clean up all debris caused by the work of this Section keeping the premises clean and neat at all times.

-- End of Section --

SECTION 12600

THEATER CHAIRS

PART 1 GENERAL

1.1 REFERENCES

The publications listed below form a part of this specification to the extent referenced. The publications are referred to in the text by basic designation only.

AMERICAN SOCIETY FOR TESTING AND MATERIALS (ASTM)

ASTM D 3597	(1995a) Woven Upholstery Fabrics-Plain, Tufted, or Flocked

HARDWOOD PLYWOOD VENEER ASSOCIATION (HPVA)

HPVA HP-1	(1994) Interim Voluntary Standard for Hardwood and Decorative Plywood

NATIONAL ELECTRICAL MANUFACTURERS ASSOCIATION (NEMA)

NEMA LD 3	(1995) High-Pressure Decorative Laminates

1.2 SUBMITTALS

Government approval is required for submittals with a "GA" designation; submittals having an "FIO" designation are for information only. The following shall be submitted in accordance with Section 01330 SUBMITTAL PROCEDURES:

SD-01 Data

Theater Chairs; GA.

Manufacturer's descriptive data, catalog cuts, and installation instructions.

SD-04 Drawings

Theater Chairs; GA.

Drawings indicating metal thickness, fastenings, details of hinge mechanism, seat and back dimensions, proposed finish, and including seating plans showing row spacing, row lengths, the varying lateral spacing at backs and seats, back pitch, and chair widths for the various section lengths, floor pitch, and riser height, where applicable.

SD-14 Samples

Theater Chairs; GA.

Samples of upholstery, plywood, laminate, paint, and plastic finish materials and one complete chair. Fabric samples shall be of sufficient size to show color range, pattern, and finish. Chair sample may be incorporated into the installation, provided it is identified and the location noted.

1.3 DELIVERY AND STORAGE

Theater chairs shall be delivered to the site in unopened containers clearly labeled with the manufacturer's name and container contents. Materials shall be stored in a safe, dry, and clean location. Handling of items shall be in a manner that will protect the materials from damage.

1.4 WARRANTY

Manufacturer's standard performance guarantees or warranties that extend beyond a one year period shall be provided.

PART 2 PRODUCTS

2.1 MATERIALS

2.1.1 Woven Fabric Upholstery

Woven fabric shall conform to ASTM D 3597. Fabric shall be treated to resist staining and soiling. Colors and pattern shall be as specified in Section 09915, COLOR SCHEDULE.

2.1.2 Polyurethane Foam

Polyurethane foam shall be high density, fire retardant, nonhardening and nonoxidizing and shall have a high resistance to alkalies, oils, grease, soaps, abrasions, moisture, mildew, and tearing.

2.1.3 Plywood

Plywood shall conform to HPVA HP-1. Face veneers for exposed surfaces shall be of Grade A white maple. Unexposed veneers shall be sound grade hardwood or Grade A fir. All face veneers shall be not more than 1/16 inch in thickness, of clear stock, and free from imperfections.

2.1.4 Laminated Plastic Sheets

Laminated plastic sheets shall conform to NEMA LD 3, Type 1, Grade GP 50, nominal thickness 0.050 inch. Colors and pattern shall be as specified in Section 09915, COLOR SCHEDULE.

2.1.5 Molded Plastic

Molded plastic shall be high density with a minimum tensile strength of 3300 psi. Material shall be capable of withstanding outdoor temperatures ranging from plus 175 degrees to minus 50 degrees F. Pigments used shall

be of such quality to eliminate painting plastic parts. Component surfaces shall have a textured finish. Colors and pattern shall be as specified in Section 09915, COLOR SCHEDULE.

2.2 CHAIRS

Chairs shall be American Seating Company Model No. 35-224, with oversized tablet arms, 22 in. seat, and 34-1/2 in. seat back height, or equal as manufactured by K1 or Irwin Seating. Chairs shall have a molded plastic seat back shell and steel seat foundation. Arms shall be solid stock white maple. End panels shall be white maple veneered plywood with vertical grain orientation. Tablets shall be plastic laminate, with a minimum of 128 sq. inches of writing surface. Chair components and assembly shall be free from objectionable projections or irregularities. Corners and edges shall be smooth and rounded. Bolts, nuts, and other fastenings shall be capped. Steel shall be well-formed to shape and size required. Jointing of members shall be welded, riveted, or interlocked. Exposed welds shall be ground and dressed smooth. Casting shall be fine textured, sound, and free of pits, blow holes, and fins. Lines shall be true, accurate, and true-to-pattern with excess metal or imperfections removed. Fastening shall be concealed where possible.

2.2.1 Chair Backs

Back assembly shall consist of an upholstered, plastic shell. Back assembly length shall be between 20 and 27-1/2 inches for a total height of 34-1/2 inches above the floor measured parallel to the back. Rear panel shall completely conceal and protect the rest of the seat assembly when in the raised position. Back shall be fixed type.

2.2.1.1 Steel Panels

Steel panels shall be upholstered cushion on steel, fabricated from not less than 20 gauge, compound-curved, die-formed steel. The perimeter of the front upholstered panel shall be hemmed.

2.2.1.2 Plastic Panels

Plastic rear panels shall be one-piece injection molded plastic.

2.2.1.3 Wood Front Panels

Plywood upholstered front panels shall be fabricated from cross-banded plywood of not less than 3 ply, 3/8 inch thick hardwood veneers.

2.2.1.4 Foam Padding

Polyurethane foam shall be high density, fire retardant and shall be not less than approximately 3 inches in thickness and shall be securely attached to the steel or plywood panel and completely covered with the approved upholstery material.

2.2.2 Seats

Foundation for upholstered seats shall be formed of not less than 20 gauge upholstered steel. The seat foundation shall be free from visible screws, bolts, open holes, and projections on the bottom, front, and sides. The upholstered seat unit shall be easily removable without removing the foundation unit; and the covering shall be fastened to the frame in a manner that will permit easy reupholstering.

2.2.2.1 Steel Seat Units

Upholstered steel seat unit shall be coil-spring type construction or nonsag spring-type construction. Springs shall be attached to a die-formed steel framework. Coil-spring units shall contain no less than 16 coil springs. Springs shall be connected in both directions to control spring axial depression. Nonsag spring units shall contain at least five serpentine design springs suspended under tension; cross bracing, if required, shall be welded to frame so as not to interfere with spring action. Cushions shall be polyurethane foam cemented to burlap sheeting; shall have a minimum thickness of 1-3/4 inches throughout for coil-spring type construction, and 3 inches at front edge, 1-3/4 inches at rear edge, and 1 inch throughout the other portions for nonsag spring units. Panel side covers shall be made without welts. Top and front cover shall have size boxing of fabric upholstery material.

2.2.2.2 Plywood Seat Units

Upholstered plywood seat unit shall be minimum 3/4 inch thick, 7-ply, electronically-glued hardwood plywood with minimum of four 1/4-20 threaded inserts for attachment of seat hinges. Cushion material shall be high-density fire-retardant polyurethane foam, minimum 3-1/2 inches thick, cored for comfort. Outside of seat bottom shall be fully encapsulated in 1/4 inch slab polyurethane foam. Padding materials shall be fully glued to plywood panels with contact cement.

2.2.3 Hinges

Hinges shall be a counterweight mechanism using gravity to return to the upright position or of the full compensating type, completely enclosed, totally independent, free and easy in operation, and capable of compensating for circular installation, variation in installation conditions, and unevenness of floors. Hinge mechanism shall be of the push-back type to allow additional aisle space while in an open position. Each hinge shall have a noiseless, self-rising seat device, shall rise automatically to a uniform safety position of 3/4 fold at all times, and shall fold 100 percent when additional pressure is applied, to provide additional clearance. The hinges shall have oil-impregnated, self-lubricating, metal or brass alloy bearings that will not require further lubrication, or nylon bushings. Hinges shall have a spring tension adjustment mechanism to allow manual compensation for normal wear and fatigue.

2.2.4 Standards

2.2.4.1 Floor Standards

Floor standards shall be tublar steel, sheet steel, or cast iron. The standards shall be formed to fit the floor incline so that the standards will be vertical and the hinge point will be at a height that will maintain proper relation of seat to floor. The feet shall be formed to eliminate tripping hazards and shall have holes for bolt attachment to the floor.

2.2.4.2 Riser Standards

Riser standards shall meet the requirements for floor mounted standard, except the standard shall be formed to approach the riser face at an angle to allow maximum clearance. Riser attachment shall be made through a 1/4 inch steel plate welded to the standard or on an integrally cast foundation.

2.2.4.3 Cantilevered Standards

The assembly shall be of not less than 11 gauge seamless tube-steel construction, designed to support three seats by the use of continuous horizontal rail and stanchions with floor plates welded thereto. Horizontal rails shall be provided in the longest practicable lengths with welded spliced ends centered on stanchions. Each length of horizontal rail shall be supported by not less than two stanchions. Stanchions shall be located at the center of every other seat, except at aisles where they shall be 12 inches in from aisle lines. Floor plates shall be formed to floor incline so stanchions will be vertical and hinge point at a height that will maintain proper relation of seat to floor.

2.2.4.4 Aisle and End Standards

Aisle or end standard panels shall be of the design indicated and shall have decorator panels of hardwood veneered plywood.

2.2.5 Armrests

Armrests shall be solid first grade oak with manufacturer's standard natural finish, color as indicated below.

2.2.6 Tablet Arm

Each chair shall be equipped with a fold-away over-sized tablet arm assembly. Tablet arm shall be fabricated of manufacturer's standard core material faced with plastic laminate. All edges shall be rounded. When in a writing position, the arm shall lock firmly in place so that it cannot be accidentally disengaged. A spring actuated device shall automatically lock the folded tablet arm in position beside the seat.

2.3 FINISH

Wood and metal surfaces shall be given the manufacturer's standard finishes.

2.4 COLOR

Colors shall be in accordance with Section 09915 COLOR SCHEDULE, and as follows:

a. Arm Rest and Standards End Treatment: 2K Light Cherry on Oak.

b. Upholstery Fabric: Infinity Collection, Fortress HMG Chain Mail.

c. Laminate Tablet Arms: BF Black.

d. Metal Parts: H Black Matte.

e. Plastic Shells: H Black.

PART 3 EXECUTION

3.1 SEATING SYSTEM

The system shall permit the standards to be installed on radial lines from a common center for which concentric circles are determined with each row of units utilizing common middle standards. Standards in each row shall be placed laterally so the aisle-end standards will be in alignment as indicated on seating layout drawing. The angle of inclination of backs shall be adjusted for variations in sightlines. Mechanical attachment of components shall be of sufficient flexibility so that when permanently assembled they will compensate for the changing dimensions laterally between standards caused by convergence toward the center. Seat and back attachments shall absorb inaccuracies in lateral spacing of standards at point of attachment caused by unevenness of floor. Varying lateral dimensions of backs and seats shall be in accordance with approved seating layout. Minimum width of seating unit shall be 20 inches and may be used only to complete a specific row dimension.

3.2 INSTALLATION

Installation of theater chairs shall be in accordance with the seating plans and approved installation instructions.

-- End of Section --

SECTION 12690

FLOOR GRIDS AND FRAMES

PART 1 GENERAL

1.1 SUBMITTALS

Government approval is required for submittals with a "GA" designation; submittals having an "FIO" designation are for information only. The following shall be submitted in accordance with Section 01330 SUBMITTAL PROCEDURES:

SD-01 Data

Product Data; GA.

Submit manufacturer's product data, installation instructions, and maintenance recommendations for each material used. Provide certifications stating that materials comply with requirements.

SD-04 Drawings

Shop Drawings; GA.

Provide large scale shop drawings for fabrication and installation of all parts of the work. Provide large scale plans and details of anchorages, connections and accessory items. Provide installation templates for frames installed in coordination with concrete work.

Field Measurements: Where possible, take accurate field measurements before preparation of shop drawings and fabrication. Do not delay job progress; allow for field cutting and fitting where taking field measurements before fabrication is not possible.

SD-14 Samples

Initial Selection Samples; GA.

Submit samples showing complete range of colors, textures, and finishes available for each material used.

1.2 DELIVERY, STORAGE AND HANDLING

Deliver materials and products in unopened factory labeled packages. Store and handle in strict compliance with manufacturers' instructions and recommendations. Protect from damage.

Sequence deliveries to avoid delays, but minimize on-site storage.

1.3 SEQUENCING AND SCHEDULING

Conference: Convene a pre-installation conference to establish procedures to coordinate this work with related and adjacent work.

Provide oversized recess in concrete subfloors and delay actual installation of recessed mat frame until near time of Substantial Completion of Project. Do not install mats until immediately before Owner's Final Acceptance of the Project.

PART 2 PRODUCTS

2.1 RECESSED ENTRANCE GRATES AND FRAMES

Provide recessed entrance grates and frames where indicated. Grates and frames with related accessories shall be by the same manufacturer and shall be recommended by manufacturer for entrance grate use.

1. Drawings and Specifications are based upon Grate Kleen entrance grids, as manufactured by Mats, Inc. Provide this product, or approved equal.

2.1.1 Entrance Grates

Entrance grates shall be 1 inch deep by 3/8 inch wide mill finish extruded aluminum T bars of ASTM B-221 6061-T6 alloy spaced not more than 3/16 inch apart, with milled striations 9/64 inch wide by 3/16 inch deep at 1/2 inch on centers to produce a wear surface of nominal 3/8 inch squares. T bars shall be joined by keylock bars at 3 inches on centers of 5/16 inch nominal threaded aluminum rods of alloy to match T bars. Threaded rods shall be inserted through drilled holes in T bars and through 5/16 inch nominal interior diameter aluminum tube spacers between each T bar at each keylock bar. Aluminum tube spacers shall be of alloy to match T bars and shall be aligned across T bars. Ends of threaded rods shall have stainless steel nuts and washers to match rod threading and tightened to firmly hold T bars without racking or rattling. Threaded rod ends shall be cut flush with nut and peened to prevent nut from backing out.

Grates shall be shop fabricated panels not exceeding 8 feet long by 3 feet wide or as indicated otherwise. Fabricate grate to be truly straight, level and square. T bars shall be perpendicular to main traffic pattern.

2.1.2 Perimeter Frames and Supports for Entrance Grates

Provide each entrance grate area with a full perimeter frame of extruded aluminum angle. Provide continuous inverted T type extruded aluminum intermediate support bars between all grate panels. Perimeter frame and intermediate supports shall be expansion bolted vertically to slab in oversized recess. Expansion bolts shall be of stainless steel and not less than 3/8 inch diameter. Perimeter frame and intermediate supports shall be of alloy to match grate T bars, in longest available lengths to minimize joints, configured with top of vertical leg flush with finished floor, and to support entrance grate flush with finished floor. Miter all corners and form tight joints. Provide concealed alignment plates or pins between

abutting sections. Intermediate supports shall be coped to fit perimeter frame.

Perimeter frame and intermediate supports shall be shimmed to required level and space underneath solidly filled with non-shrink type grout conforming to the requirements of section 05500 MISCELLANEOUS METALS or as recommended by grate manufacturer. Provide protective coating on aluminum surfaces in contact with concrete or grout materials to prevent corrosion.

PART 3 EXECUTION

3.1 INSPECTION

The Installer shall examine substrates, supports, and conditions under which this work is to be performed and notify Contractor, in writing, of conditions detrimental to the proper completion of the work. Do not proceed with work until unsatisfactory conditions are corrected. Beginning work means Installer accepts substrates and conditions.

3.2 INSTALLATION

Strictly comply with manufacturer's instructions and recommendations, except where more restrictive requirements are specified in this Section.

Coordinate top of mat elevation with frame and floor elevations to provide proper foot cleaning and to avoid all possibility of tripping hazard. Coordinate installation with door bottom clearances of doors that swing across mats.

Install frame near time of Substantial Completion of Project. Shim and grout frame into oversize recess. Provide temporary filler of plywood or other suitable material to protect frame until installation of mat at time of final acceptance of Project.

3.3 CLEANING

Clean exposed surfaces using materials and methods recommended by manufacturer of material or product being cleaned. Remove and replace work that cannot be successfully cleaned.

-- End of Section --

SECTION 12765

BLEACHERS

PART 1 GENERAL

1.1 REFERENCES

The publications listed below form a part of this specification to the extent referenced. The publications are referred to in the text by basic designation only.

American Society for Testing and Materials (ASTM)

ASTM A 36	Structural Steel

American Welding Society (AWS)

AWS D1.1	Structural Welding Code - Steel
AWS D1.3	Structural Welding Code--Sheet Steel

National Fire Protection Association (NFPA)

NFPA 102	Standards for Assembly Seating, Tents, and Air-Supported Structure

1.2 SUBMITTALS

Government approval is required for submittals with a "GA" designation; submittals having an "FIO" designation are for information only. The following shall be submitted in accordance with Section 01330 SUBMITTAL PROCEDURES:

SD-01 Data

Bleachers; GA.

Submit product Data for each type of bleacher specified, including details of construction relative to materials, dimensions of individual components, profiles, and finishes

SD-04 Drawings

Bleachers; GA.

Submit Shop Drawings of each bleacher system specified, including complete details and schedules for fabrication and assembly of bleachers, and schedules, procedures, and diagrams showing sequence of erection. Shop Drawings shall not be made by using reproductions of Contract Drawings.

1. Include details of cuts, connections, holes, and other pertinent data. Indicate welds by standard AWS symbols, and show size, length, and type of each weld.

SD-14 Samples

Wood Seats; GA, Aluminum Seat; GA.

Samples: Submit material and finish samples as follows:

1. 12 in. long section of wood seatboard with standard transparent finish,
2. 12 in. long sample of aluminum seat with specified finish.

1.3 QUALITY ASSURANCE

NFPA Standard: Comply with requirements of NFPA 102, except where more stringent requirements are indicated or imposed by authorities having jurisdiction.

Welding Standards: Comply with applicable provisions of AWS D1.1 and AWS D1.3.

1. Engage certified welders that have satisfactorily passed AWS qualification tests for welding processes involved and, if pertinent, have undergone recertification.

PART 2 PRODUCTS

2.1 ALUMINUM BLEACHERS

Provide three-row by 15 ft. long bleachers. Bleacher seats and foot planks shall be 10 in. wide, clear anodized aluminum. Support frame shall be ASTM A 36 steel shapes, hot-dip galvanized after fabrication in conformance with ASTM A 123, ASTM A 153 or ASTM A 386 as applicable.

Bleacher units shall be flip and roll type, with manufacturer's standard heavy-duty swivel casters mounted on the rear of units.

1. Product: Provide Goal Sporting Goods Model BL330 with BFS wheels, or approved equal.

2. Quantity: Provide three (3) aluminum bleacher units, located as field directed by the Contracting Officer.

2.2 WOOD BLEACHERS

Provide three-row by 8 ft. long portable wood bleachers. Seats and foot planks shall be Southern Yellow Pine, in conformance with USDC PS-20, clear finished. Support frame shall be ASTM A 36 steel shapes, hot-dip galvanized after fabrication in conformance with ASTM A 123, ASTM A 153 or ASTM A 386 as applicable.

Row spacing shall be 26 inches, row height shall be 11 5/8 inch. Provide manufacturer's standard rear panels and removable rear rail. Provide manufacturer's standard heavy-duty integral dollies.

1. Product: Provide Hussey Series 2600, or approved equal.

2. Quantity: Provide eighteen (18) wood bleacher units, located as field directed by the Contracting Officer.

PART 3 EXECUTION

3.1 INSTALLATION

Bleacher units shall be delivered to the Project site, assembled, and installed at locations as field directed by the Contracting Officer.

-- End of Section --

SECTION 13080

SEISMIC PROTECTION FOR MECHANICAL, ELECTRICAL EQUIPMENT

PART 1 GENERAL

1.1 REFERENCES

The publications listed below form a part of this specification to the extent referenced. The publications are referred to in the text by basic designation only.

AMERICAN SOCIETY FOR TESTING AND MATERIALS (ASTM)

ASTM A 36/A 36M	(1996) Carbon Structural Steel
ASTM A 53	(1996) Pipe, Steel, Black and Hot-Dipped, Zinc-Coated Welded, and Seamless
ASTM A 153	(1996) Zinc Coating (Hot-Dip) on Iron and Steel Hardware
ASTM A 307	(1994) Carbon Steel Bolts and Studs, 60,000 PSI Tensile Strength
ASTM A 500	(1993) Cold-Formed Welded and Seamless Carbon Steel Structural Tubing in Rounds and Shapes
ASTM A 563	(1994) Carbon and Alloy Steel Nuts
ASTM A 603	(1994) Zinc-Coated Steel Structural Wire Rope
ASTM A 653/A 653M	(1996) Steel Sheet, Zinc-Coated (Galvanized) or Zinc-Iron Alloy-Coated (Galvannealed) by the Hot-Dip Process
ASTM E 488	(1990) Strength of Anchors in Concrete and Masonry Elements
ASTM E 580	(1991) Application of Ceiling Suspension Systems for Acoustical Tile and Lay-In Panels in Areas Requiring Seismic Restraint

AMERICAN SOCIETY OF MECHANICAL ENGINEERS (ASME)

ASME B18.2.1	(1981; Supple 199O; R 1992) Square and Hex Bolts and Screws (Inch Series)
ASME B18.2.2	(1987; R 1993) Square and Hex Nuts (Inch

Series)

INTERNATIONAL CONFERENCE OF BUILDING OFFICIALS (ICBO)

ICBO-01 (1997) Uniform Building Code (3 Vol.)

SHEET METAL & AIR CONDITIONING CONTRACTORS' NATIONAL ASSOCIATION (SMACNA)

SMACNA-12 (1991; Appx E, 1993) Seismic Restraint Manual Guidelines for Mechanical Systems

UNDERWRITERS LABORATORIES (UL)

UL 1570 (1995) Fluorescent Lighting Fixtures

UL 1571 (1991; Rev thru Mar 95) Incandescent Lighting Fixtures

1.2 SYSTEM DESCRIPTION

1.2.1 General

The requirements for seismic protection measures described in this section shall be applied to mechanical/electrical equipment and systems specified herein. Seismic protection requirements shall be in accordance with ICBO-01 using an importance factor of 1 and shall be provided in addition to any other requirements called for in other sections of these specifications. This facility shall be designed as being in seismic zone 2A; no other zone values shall be used to establish bracing requirements. Lateral support against earthquake induced forces shall be accomplished by positive attachments without consideration of friction resulting from gravity loads.

1.2.2 Mechanical/Electrical Equipment

Mechanical/electrical equipment shall be seismically protected in accordance with this specification section.

Mechanical/electrical equipment shall include the following items:

Storage Tanks for Water	Pool Mechanical Equipment
Water Heaters	Steam and Water Piping
Expansion Air Separator Tanks	Cable Trays
Heat Exchangers	Fuel Oil Storage Tanks
Liquid Chiller Units	Engine-Driven Generators
Cooling Towers	Air and Refrigerant Compressors
Control Panels	Air Handling Units
Pumps with Motors	Switchgear
Light Fixtures	Unit Substations
Motor Control Centers	Transformers
Switchboards (Floor Mounted)	Storage Racks
Suspended Ceiling Assemblies	Ducts
Flash Tanks	Unit Heaters
Exhaust and Return Fans	Main Telecommunications UPS Units

Heating and Ventilating Units
Pool Pumps
Chlorine Tanks
Sand Filters for Swimming Pool System
and Batteries
Oil Tank
Sand Filters for Condenser Water System

1.2.3 Mechanical/Electrical Systems

The following mechanical and electrical systems shall be installed as required on the drawings and other sections of these specifications and shall be seismically protected in accordance with this specification:

All Piping Inside the Building in Accordance With This Specification

Ductwork Systems inside the Building

Storm and Sanitary Sewer Systems

Outside Heat Distribution, Return, and Condensate Systems
Condenser Water Piping Outside the Building

1.2.4 Equipment and Systems

The bracing for the above referenced mechanical/electrical in Paragraph 1.2 equipment and systems shall be developed by the Contractor in accordance with the requirements of this specification.

1.2.5 Exclusion

Seismic protection of piping for fire protection systems shall be installed as specified in Sections 13930 WET PIPE SPRINKLER SYSTEM, FIRE PROTECTION.

1.2.6 Pipes and Ducts Requiring No Special Seismic Restraints

Seismic restraints may be omitted from the following installations:

1. Piping in boiler and mechanical equipment rooms less than 1-1/4 inches inside diameter.

2. All other piping less than 1-1/2 inches inside diameter.

3. Electrical conduit less than 2-1/2 inches inside diameter.

4. Rectangular air handling ducts less than 4 square feet in cross sectional area.

5. Round air handling ducts less than 18 inches in diameter.

6. Piping suspended by individual hangers 12 inches or less in length from the top of pipe to the bottom of the supporting structural member where the hanger is attached, except as noted below.

7. Ducts suspended by hangers 12 inches or less in length from the

top of the duct to the bottom of the supporting structural member, except as noted below.

In exemptions 6. and 7. all hangers shall meet the length requirements. If the length requirement is exceeded by one hanger in the run, the entire run shall be braced.

1.2.7 All Other Interior Piping, Conduit, and Ducts

Interior piping, conduit, and ducts not covered by paragraphs Exclusion or Pipes and Ducts Requiring No special Seismic Restraints shall be seismically protected in accordance with the provisions herein.

1.3 SUBMITTALS

Government approval is required for submittals with a "GA" designation; submittals having an "FIO" designation are for information only. The following shall be submitted in accordance with Section 01330 SUBMITTAL PROCEDURES:

SD-01 Data

Bracing and Coupling; GA. Lighting Fixtures in Buildings; GA. Miscellaneous Equipment; GA.

Copies of the design calculations with the detail drawings. Calculations shall be stamped by a registered engineer and shall verify the capability of structural members to which bracing is attached for carrying the load from the brace.

SD-04 Drawings

Bracing and Coupling; GA. Flexible Couplings or Joints; GA. Resilient Vibration Isolation Devices; GA. Bridge Cranes and Monorails; GA. Lighting Fixtures in Buildings; GA. Miscellaneous Equipment; GA.

Detail drawings along with catalog cuts, templates, and erection and installation details, as appropriate, for the items listed. Submittals shall be complete in detail; shall indicate thickness, type, grade, class of metal, and dimensions; and shall show construction details, reinforcement, anchorage, and installation with relation to the building construction.

SD-13 Certificates

Flexible Ball Joints; GA.

Flexible ball joints shall be certified to be suitable for the service intended by the manufacturer, based on not less than 2 years' satisfactory operation in a similar application.

PART 2 PRODUCTS

2.1 MATERIALS AND EQUIPMENT

Materials and equipment shall conform to the requirements specified below:

2.1.1 Bolts and Nuts

Squarehead and hexhead bolts, and heavy hexagon nuts, ASME B18.2.1, ASME B18.2.2, or ASTM A 307 for bolts and ASTM A 563 for nuts. Bolts and nuts used underground and/or exposed to weather shall be galvanized in accordance with ASTM A 153.

2.1.2 Sway Bracing

Material used for members listed in this section and on the drawings, shall be structural steel conforming with the following:

a. Plates, rods, and rolled shapes, ASTM A 36/A 36M.

b. Wire rope, ASTM A 603.

c. Tubes, ASTM A 500, Grade B.

d. Pipes, ASTM A 53, Type E or S, Grade B.

e. Light gauge angles, less than 1/4 inch thickness, ASTM A 653/A 653M.

2.1.3 Flexible Couplings

Flexible couplings shall have same pressure and temperature ratings as adjoining pipe specified in section 15562, HEATING AND UTILITIES CENTRAL STEAM; Section 15556, FORCED HOT WATER HEATING SYSTEMS USING WATER AND STEAM HEAT EXCHANGERS; Section 15650, CENTRAL REFRIGERATED AIR-CONDITIONING SYSTEM..

2.1.3.1 Flexible Ball Joints

Flexible ball joints shall have cast or wrought steel casing and ball parts capable of 360-degree rotation plus not less than 15-degree angular movement.

2.1.3.2 Flexible Mechanical Joints

a. Mechanical couplings for steel or cast iron pipe shall be of the sleeve type and shall provide a tight flexible joint under all reasonable conditions, such as pipe movement caused by expansion, contraction, slight settling or shifting of the ground, minor variations in trench gradients, and traffic vibrations. Where permitted in other sections of these specifications, joints utilizing split-half couplings with grooved or shouldered pipe ends may be used.

b. Sleeve-type couplings shall be used for joining plain-end pipe sections. The coupling shall consist of one steel middle ring, two steel followers, two gaskets, and necessary steel bolts and nuts to compress the gaskets. Underground bolts shall be

high-strength type as specified above.

2.1.4 Lighting Fixture Supports

Fixture supports shall be malleable iron. Lighting fixtures and supports shall conform to UL 1570 or UL 1571 as applicable.

PART 3 EXECUTION

3.1 BRACING AND COUPLING

Bracing and coupling shall conform to the arrangements shown. Provisions of this paragraph apply to all piping within a 5 foot line around outside of building unless buried in the ground. Piping grouped for support on trapeze-type hangers shall be braced at the same intervals as determined by the smallest diameter pipe of the group. No trapeze-type hanger shall be secured with less than two 1/2 inch bolts. Bracing rigidly attached to pipe flanges, or similar, shall not be used where it would interfere with thermal expansion of piping.

3.2 BUILDING DRIFT

Sway braces for a run shall not be attached to two dissimilar structural elements of a building that may respond differentially during an earthquake unless a flexible joint is provided. Joints capable of accommodating seismic displacements shall be provided where pipes pass through a building seismic or expansion joint, or where rigidly supported pipes connect to equipment with vibration isolators. For threaded piping, swing joints shall be provided. For piping with manufactured ball joints the seismic drift shall be 0.015 feet per foot of height above the base where the seismic separation occurs; this drift value shall be used in place of the expansion given in the manufacturer's selection table.

3.3 FLEXIBLE COUPLINGS OR JOINTS

3.3.1 Building Piping

Flexible couplings or joints in building piping shall be provided at bottom of all pipe risers larger than 3-1/2 inches in diameter. Flexible couplings or joints shall be braced laterally without interfering with the action of the flexible coupling or joint. Cast iron waste and vent piping need only comply with these provisions when caulked joints are used. Flexible bell and spigot pipe joints using rubber gaskets or no-hub fittings may be used at each branch adjacent to tees and elbows for underground waste piping inside of building to comply with these requirements.

3.3.2 Underground Piping

Underground piping and 4 inch or larger conduit, except heat distribution system, shall have flexible couplings installed where the piping enters the building. The couplings shall accommodate 2 inches of relative movement between the pipe and the building in any direction.

3.4 PIPE SLEEVES

Pipe sleeves in interior non-fire rated walls shall be sized as indicated on the drawings to provide clearances that will permit differential movement of piping without the piping striking the pipe sleeve.

3.5 SPREADERS

Spreaders shall be provided between adjacent piping runs to prevent contact during seismic activity whenever pipe or insulated pipe surfaces are less than 4 inches apart. Spreaders shall be applied at same interval as sway braces at an equal distance between the sway braces. If rack type hangers are used where the pipes are restrained from contact by mounting to the rack, spreaders are not required for pipes mounted in the rack. Spreaders shall be applied to surface of bare pipe and over insulation on insulated pipes utilizing high-density inserts and pipe protection shields in accordance with the requirements of Section 15080THERMAL INSULATION FOR MECHANICAL SYSTEMS.

3.6 ANCHOR BOLTS

3.6.1 Cast-In-Place

Floor or pad mounted equipment shall use cast-in-place anchor bolts, except as specified below. Two nuts shall be provided on each bolt. Anchor bolts shall conform to the following tabulation for the various equipment weights and specified seismic zone or the manufacturer's installation recommendations, whichever is the most stringent, unless otherwise shown on the drawings. Anchor bolts that exceed the normal depth of equipment foundation piers or pads shall either extend into concrete floor or the foundation shall be increased in depth to accommodate bolt lengths.

3.6.2 Minimum Bolt Sizes, Cast-In-Place Anchor Bolts

Maximum Equipment Weight (LBs)	Minimum Bolt Sizes (Inches)* Zone 2A
500	1/2
1,000	1/2
5,000	1/2
10,000	1/2
20,000	1/2
30,000	1/2
50,000	1/2
100,000	*5/8

*Based on four bolts per item, a minimum embedment of 12 bolt diameters, a minimum bolt spacing of 16 bolt diameters and a minimum edge distance of 12 bolt diameters. Equivalent total cross-sectional area shall be used when more than four bolts per item are provided. Anchor bolts shall conform to ASTM A 307. Anchor bolts shall have an embedded straight length equal to at least 12 times nominal diameter of the bolt.

**Equipment weighing more than 50,000 lb in Zones 3 and 4 shall have at least six bolts per item.

3.6.3 Expansion or Chemically Bonded Anchors

Expansion or chemically bonded anchors shall not be used unless test data in accordance with ASTM E 488 has been provided to verify the adequacy of the specific anchor and application. The expansion anchor size shall be not less than that required in paragraph Minimum Bolt Sizes, Cast-In-Place Anchor Bolts. Expansion and chemically bonded anchors shall be installed in accordance with the manufacturer's recommendations. The allowable forces shall be adjusted for the spacing between anchor bolts and the distance between the anchor bolt and the nearest edge, as specified by the manufacturer.

3.6.3.1 General Testing

Expansion and chemically bonded anchors shall be tested in place after installation. The tests shall occur not more than 24 hours after installation of the anchor and shall be conducted by an independent testing agency; testing shall be performed on random anchor bolts as described below.

3.6.3.2 Torque Wrench Testing

Torque wrench testing shall be done on not less than 50 percent of the total installed expansion anchors and at least one anchor for every piece of equipment containing more than two anchors. The test torque shall equal the minimum required installation torque as required by the bolt manufacturer. Torque wrenches shall be calibrated at the beginning of each day the torque tests are performed. Torque wrenches shall be recalibrated for each bolt diameter whenever tests are run on bolts of various diameters. The applied torque shall be between 20 and 100 percent of wrench capacity. The test torque shall be reached within one half turn of the nut, except for 3/8 inch sleeve anchors which shall reach their torque by one quarter turn of the nut. If any anchor fails the test, similar anchors not previously tested shall be tested until 20 consecutive anchors pass. Failed anchors shall be retightened and retested to the specified torque; if the anchor still fails the test it shall be replaced.

3.6.3.3 Pullout Testing

Expansion and chemically bonded anchors shall be tested by applying a pullout load using a hydraulic ram attached to the anchor bolt. At least 5 percent of the anchors, but not less than three per day shall be tested. The load shall be applied to the anchor without removing the nut; when that is not possible, the nut shall be removed and a threaded coupler shall be installed of the same tightness as the original nut. The test setup shall be checked to verify that the anchor is not restrained from withdrawing by the baseplate, the test fixture, or any other fixtures. The support for the testing apparatus shall be at least 1.5 times the embedment length away from the bolt being tested. Each tested anchor shall be loaded to 1 times the design tension value for the anchor. The anchor shall have no observable movement at the test load. If any anchor fails the test,

similar anchors not previously tested shall be tested until 20 consecutive anchors pass. Failed anchors shall be retightened and retested to the specified load; if the anchor still fails the test it shall be replaced.

3.7 RESILIENT VIBRATION ISOLATION DEVICES

Selection of anchor bolts for vibration isolation devices and/or snubbers for equipment base and foundations shall follow the same procedure as in paragraph ANCHOR BOLTS except that an equipment weight equal to five times the actual equipment weight shall be used.

3.7.1 Resilient and Spring-Type Vibration Devices

Vibration isolation devices shall be selected so that the maximum movement of equipment from the static deflection point shall be 0.5 inches.

3.7.2 Multidirectional Seismic Snubbers

Multidirectional seismic snubbers employing elastomeric pads shall be installed on all floor- or slab-mounted equipment. These snubbers shall provide 0.25 inches free vertical and horizontal movement from the static deflection point. Snubber medium shall consist of multiple pads of cotton duct and neoprene or other suitable materials arranged around a flanged steel trunnion so both horizontal and vertical forces are resisted by the snubber medium.

3.8 SWAY BRACES FOR PIPING

Sway braces shall be provided to prevent movement of the pipes under seismic loading. Braces shall be provided in both the longitudinal and transverse directions, relative to the axis of the pipe. The bracing shall not interfere with thermal expansion requirements for the pipes as described in other sections of these specifications.

3.8.1 Transverse Sway Bracing

Transverse sway bracing for steel and copper pipe shall be provided at intervals not to exceed those given in the tabulation below as modified for each seismic zone. All runs shall have a minimum of two transverse braces. Transverse sway bracing for pipes of materials other than steel and copper shall be provided at intervals not to exceed the hanger spacing as specified in Section 15400 PLUMBING, GENERAL PURPOSE.

3.8.2 Maximum Span for Transverse Sway Braces in Seismic Zone 4

Pipe Diameter	Std. Wgt. Steel Pipe - 40S		Ex. Strong Steel Pipe - 80S		Copper Tube Type L	
(in.)	*L(ft.)	**F(lbs.)	*L(ft.)	**F(lbs.)	*L(ft.)	**F(lbs.)
1	22	70	22	80	11	17
1-1/2	25	140	26	180	12	35
2	29	220	30	290	14	70

Pipe Diameter	Std. Wgt. Steel Pipe - 40S		Ex. Strong Steel Pipe - 80S		Copper Tube Type L	
(in.)	*L(ft.)	**F(lbs.)	*L(ft.)	**F(lbs.)	*L(ft.)	**F(lbs.)
2-1/2	32	380	33	460	15	110
3	34	550	35	710	17	150
3-1/2	36	730	38	930	18	220
4	39	960	40	1,200	19	300
5	41	1,440	44	1,900	20	470
6	45	2,120	46	2,750	22	730
8	49	3,740	54	5,150	26	1,550
10	54	6,080	59	7,670	28	2,630
12	58	8,560	61	10,350	31	3,950

*L = Maximum span between lateral supports multiplied by 1.25 for Zone 2A.

**F = Horizontal force on the brace multiplied by 0.5 for Zone 2A.

NOTE: Bracing shall consist of at least one vertical angle 2 x 2 x 16 gauge and one diagonal angle of the same size.

3.8.3 Longitudinal Sway Bracing

Longitudinal sway bracing shall be provided at 40 foot intervals except when the location of sway braces is shown on the drawings for the particular piping system. All runs shall have one longitudinal brace minimum. Sway braces shall be constructed in accordance with the drawings. Branch lines, walls, or floors shall not be used as sway braces.

3.8.4 Vertical Runs

Vertical runs of piping shall be braced at not more than 10 foot vertical intervals. For tubing, bracing shall be provided at no more than 4 foot spacing. Vertical braces shall be above the center of gravity of the span being braced. All sway braces shall be constructed in accordance with the drawings. Branch lines, walls, or floors shall not be used as sway braces.

3.8.5 Anchor Rods, Angles, and Bars

Anchor rods, angles, and bars shall be bolted to either pipe clamps or pipe flanges at one end and cast-in-place concrete or masonry insert or clip angles bolted to the steel structure on the other end. Rods shall be solid metal or pipe as specified below. Anchor rods, angles, and bars shall not exceed lengths given in the tabulation below.

3.8.6 Maximum Length for Anchor Braces

Type	Size (Inches)	Maximum Length* (Feet/Inches)	Allowable Loads* (kips)
Angles	1-1/2 x 1-1/2 x 1/4	4-10	5.7

Type	Size (Inches)	Maximum Length* (Feet/Inches)	Allowable Loads* (kips)
	2 x 2 x 1/4	6-6	7.8
	2-1/2 x 1-1/2 x 1/4	8-0	9.8
	3 x 2-1/2 x 1/4	8-10	10.8
	3 x 3 x 1/4	9-10	11.9
Rods	3/4	3-1	3.7
	7/8	3-8	5.0
Flat Bars	1-1/2 x 1/4	1-2	3.1
	2 x 1/4	1-2	4.1
	2 x 3/8	1-9	6.2
Pipes (40S)	1	7-0	4.1
	1-1/4	9-0	5.5
	1-1/2	10-4	6.6
	2	13-1	8.9

*Based on the slenderness ratio of l/r = 200 and ASTM A 36/A 36M steel, where l is the length of the brace and r is the least radius of gyration of the brace.

3.8.7 Clamps and Hangers

Clamps or hangers on uninsulated pipes shall be applied directly to pipe. Insulated piping shall have clamps or hangers applied over insulation in accordance with Section 15080 THERMAL INSULATION FOR MECHANICAL SYSTEMS.

3.8.8 Bolts

Bolts used for attachment of anchors to pipe and structure shall be not less than 1/2 inch diameter.

3.9 SWAY BRACES FOR DUCTS

3.9.1 Braced Ducts

Bracing details and spacing for rectangular and round ducts shall be in accordance with SMACNA-12, including Appendix E, using Seismic Hazard Level C.

3.9.2 Unbraced Ducts

Hangers for unbraced ducts shall be positively attached to the duct within 2 inches of the top of the duct with a minimum of two #10 sheet metal screws. Unbraced ducts shall be installed with a 6 inch minimum clearance to vertical ceiling hanger wires.

3.10 SWAY BRACES FOR CONDUIT

Conduit shall be braced as for an equivalent weight pipe.

3.11 EQUIPMENT SWAY BRACING

3.11.1 Suspended Equipment

Equipment sway bracing shall be provided for items supported from overhead floor or roof structures. Braces shall consist of angles, rods, wire rope, bars, or pipes arranged as shown and secured at both ends with not less than 1/2 inch bolts. Braces shall conform to paragraph Maximum Length for Anchor Braces. Sufficient braces shall be provided for equipment to resist a horizontal force equal to 0.56 times the weight of equipment without exceeding safe working stress of bracing components. Details of equipment bracing shall be submitted for approval. In lieu of bracing with vertical supports, these items may be supported with hangers inclined at 45 degrees directed up and radially away from equipment and oriented symmetrically in 90-degree intervals on the horizontal plane, bisecting the angles of each corner of the equipment, provided that supporting members are properly sized to support operating weight of equipment when hangers are inclined at a 45-degree angle.

3.11.2 Floor or Pad Mounted Equipment

3.11.2.1 Shear Resistance

Floor mounted equipment shall be bolted to the floor. Requirements for the number and installation of bolts to resist shear forces shall be in accordance with paragraph ANCHOR BOLTS.

3.11.2.2 Overturning Resistance

The ratio of the height of the equipment (measured from the base to the center of gravity of the equipment) to the minimum distance between anchor bolts shall be used to determine if overturning forces need to be considered in the sizing of anchor bolts. If this ratio is greater than 3.33 the bolt values in paragraph Minimum Bolt Sizes, Cast-In-Place Anchor Bolts shall not be used and calculations shall be provided to verify the adequacy of the anchor bolts for combined shear and overturning.

3.12 MISCELLANEOUS EQUIPMENT

3.12.1 Rigidly Mounted Equipment

The following specific items of equipment to be furnished under this contract shall be constructed and assembled to withstand a horizontal lateral force of 0.15 times the operating weight of the equipment, at vertical center of gravity of the equipment without causing permanent deformation, dislocations, separation of components, or other damage, which would render the equipment inoperative for significant periods of time following an earthquake.

Rigidly Mounted Equipment

Hetaing and Ventilating Units
Air-Handling Units

Substations
Transformers
Switch Boards and Switch Gears
Motor Control Centers
Free Standing Electric Motors
Surge Tanks

3.12.2 Nonrigid or Flexibly-Mounted Equipment

The following specific items of equipment to be furnished shall be constructed and assembled to resist a horizontal lateral force of 1.5 times the operating weight of the equipment at the vertical center of gravity of the equipment.

3.13 LIGHTING FIXTURES IN BUILDINGS

Lighting fixtures and supports shall conform to the following:

3.13.1 Pendant Fixtures

Loop and hook or swivel hanger assemblies for pendant fixtures shall be fitted with a restraining device to hold the stem in the support position during earthquake motions. Pendant-supported fluorescent fixtures shall also be provided with a flexible hanger device at the attachment to the fixture channel to preclude breaking of the support. The motion of swivels or hinged joints shall not cause sharp bends in conductors or damage to insulation.

3.13.2 Recessed Fluorescent Fixtures

Recessed fluorescent individual or continuous-row mounted fixtures shall be supported by a seismic-resistant suspended ceiling support system and shall be fastened thereto at each corner of the fixture with bolts or approved clips; or shall be provided with fixture support wires attached to the building structural members using two wires for individual fixtures, attached to opposite corners, and one wire per unit of continuous row mounted fixtures. Each wire support shall be capable of supporting four times the weight of the fixture. Recessed lighting fixtures not over 56 pounds in weight and suspended or pendant-hung fixtures not over 20 pounds in weight may be supported by and attached directly to the ceiling system runners by a positive attachment such as screws or bolts, number and size as required by design seismic zone. Fixture accessories, including louvers, diffusers, and lenses shall have lock or screw attachments.

3.13.3 Assembly Mounted on Outlet Box

A supporting assembly that is intended to be mounted on an outlet box shall be designed to accommodate mounting features on 4 inch boxes, 3 inch plaster rings, and fixture studs.

3.13.4 Surface-Mounted Fluorescent Fixtures

Surface-mounted fluorescent individual or continuous-row fixtures shall be attached to a seismic-resistant ceiling support system. Fixture support

devices for attaching to suspended ceilings shall be a locking-type scissor clamp or a full loop band that will securely attach to the ceiling support. Fixtures attached to underside of a structural slab shall be properly anchored to the slab at each corner of the fixture.

3.13.5 Wall-Mounted Emergency Light Unit

Each wall-mounted emergency light unit shall be secured to remain in place during a seismic disturbance.

3.13.6 Lateral Force

Light fixture bracing shall be designed to resist a lateral force of 0.56 times the fixture weight.

3.14 SUSPENDED CEILING ASSEMBLIES

The structural members of ceiling support systems, used primarily to support acoustical tile panels or acoustical panel lay-in tiles, with or without lighting fixtures, ceiling-mounted air terminals, and ceiling-mounted services, shall conform to the following:

3.14.1 Design Loads

The main runners and cross-runners and their splices and intersection connections shall be designed for two times the design load or ultimate axial tension or compression (minimum 120 pounds.) The connections at the splices and intersections shall be of a mechanical interlocking type that cannot easily be disengaged. Ceiling structural systems shall be designed to withstand required vertical load as well as a lateral force of 23 percent of the ceiling weight. The ceiling weight shall include all lighting fixtures and other equipment that are laterally supported by the ceiling and shall be not less than 4.0 psf. Exception: Ceiling areas of 144 square feet or less surrounded by walls that connect directly to the structure above will be exempt from the lateral-load standards of this specification.

3.14.2 Installation Requirements

Installation requirements shall be in accordance with ASTM E 580 except as follows:

3.14.2.1 Vertical Support

Hanger wires supporting a maximum tributary ceiling area of 16 square feet shall be a minimum of 10 gauge in diameter. The size of wires supporting a tributary ceiling area greater than 16 square feet shall be substantiated by design calculations. Hanger attachment devices used in ceiling systems not exceeding 4 psf shall be capable of supporting a minimum allowable load of 300 pounds. Hanger attachment devices used in ceiling systems exceeding 4 psf shall be capable of supporting the design load and shall be substantiated by design calculations. If hangers must be splayed more than one horizontal to six vertical, the resulting horizontal force shall be offset by bracing or counter-splaying, and substantiated by design

calculations.

3.14.2.2 Lateral Support

In lieu of the design criteria stated above, where ceiling loads do not exceed 4 psf, lateral support for the ceiling system may be provided by four galvanized wires of minimum No. 12 gauge, as indicated in ASTM E 580, paragraph 4.4.6.

3.14.3 Lighting Fixture and Air Diffuser Supports

Lighting fixture and air diffuser supports shall be designed and installed to meet the requirements of equipment supports in the preceding paragraphs of this specification with the following exceptions:

a. Recessed lighting fixtures not over 56 pounds in weight and suspended and pendent-hung fixtures not over 20 pounds in weight may be supported and attached directly to the ceiling system runners by a positive attachment such as screws or bolts.

b. Air diffusers that weigh not more than 20 pounds and that receive no tributary loading from ductwork may be positively attached to and supported by the ceiling runners.

-- End of Section --

SECTION 13100

LIGHTNING PROTECTION SYSTEM

PART 1 GENERAL

1.1 REFERENCES

The publications listed below form a part of this specification to the extent referenced. The publications are referred to in the text by basic designation only.

NATIONAL FIRE PROTECTION ASSOCIATION (NFPA)

NFPA 70	(1999) National Electrical Code
NFPA 780	(1997) Installation of Lightning Protection Systems

UNDERWRITERS LABORATORIES (UL)

UL 96	(1994; Rev thru Dec 1996) Lightning Protection Components
UL 96A	(1994) Installation Requirements for Lightning Protection Systems
UL 467	(1993; Rev thru Aug 1996) Grounding and Bonding Equipment
UL Elec Const Dir	(1997) Electrical Construction Materials Directory

1.2 GENERAL REQUIREMENTS

1.2.1 Verification of Dimensions

The Contractor shall become familiar with all details of the work, verify all dimensions in the field, and shall advise the Contracting Officer of any discrepancy before performing the work. No departures shall be made without the prior approval of the Contracting Officer.

1.2.2 System Requirements

The system provided under this specification shall consist of the standard products of a manufacturer regularly engaged in the production of lightning protection systems and shall be the manufacturer's latest UL approved design. The lightning protection system shall conform to NFPA 70 and NFPA 780, UL 96 and UL 96A, except where requirements in excess thereof are specified herein.

1.3 SUBMITTALS

Government approval is required for submittals with a "GA" designation; submittals having an "FIO" designation are for information only. The following shall be submitted in accordance with Section 01330 SUBMITTAL PROCEDURES:

SD-04 Drawings

Lightning Protection System; GA.

Detail drawings consisting of a complete list of material, including manufacturer's descriptive and technical literature, catalog cuts, drawings, and installation instructions. Detail drawings shall demonstrate that the system has been coordinated and will function as a unit. Drawings shall show proposed layout and mounting and relationship to other parts of the work.

SD-13 Certificates

Materials and Equipment; GA.

Where material or equipment is specified to comply with requirements of UL, submitproof of such compliance. The label of or listing in UL Elec Const Dir will be acceptable evidence. In lieu of the label or listing, a written certificate from an approved nationally recognized testing organization equipped to perform such services, stating that the items have been tested and conform to the requirements and testing methods of Underwriters Laboratories may be submitted. A letter of findings shall be submitted certifying UL inspection of lightning protection systems provided on the following facilities: New Building Segments "YS', 'YN', 'ZE', and 'ZW'.

PART 2 PRODUCTS

2.1 MATERIALS

2.1.1 General Requirements

All lightning protection system materials shall be copper, except that ariels and their mounting bases, roof conductors and their clamps , and any other component that is exposed` to weather shall be aluminum. where dissimilar metals meet within these systems, dielectric connectors and fittings shall be incorporated. All intermittent cables and conductors shall be secured with cast clamps, not stamped type.

No combination of materials shall be used that form an electrolytic couple of such nature that corrosion is accelerated in the presence of moisture unless moisture is permanently excluded from the junction of such metals. Where unusual conditions exist which would cause corrosion of conductors, conductors with protective coatings or oversize conductors shall be used. Where a mechanical hazard is involved, the conductor size shall be increased to compensate for the hazard or the conductors shall be protected by covering them with molding or tubing made of wood or nonmagnetic

material. When metallic conduit or tubing is used, the conductor shall be electrically connected at the upper and lower ends.

2.1.2 Main and Secondary Conductors

Conductors shall be in accordance with NFPA 780 and UL 96 for Class I, Class II, or Class II modified materials as applicable.

2.1.3 Air Terminals

Terminals shall be in accordance with UL 96 and NFPA 780. Air terminals more than 24 inches in length shall be supported by a suitable brace, with guides not less than one-half the height of the terminal.

2.1.4 Ground Rods

Rods shall be made of copper-clad steel and shall conform to UL 467. Ground rods shall be not less than 3/4 inch in diameter and 10 feet in length.

2.1.5 Connectors

Clamp-type connectors for splicing conductors shall conform to UL 96, class as applicable, and, Class 2, style and size as required for the installation. Clamp-type connectors shall only be used for the connection of the roof conductor to the air terminal and to the guttering. All other connections, bonds, and splices shall be done by exothermic welds or by high compression fittings. The exothermic welds and high compression fittings shall be listed for the purpose. The high compression fittings shall be the type which require a hydraulically operated mechanism to apply a minimum of 10,000 psi.

2.1.6 Lightning Protection Components

Lightning protection components, such as bonding plates, air terminal supports, chimney bands, clips, and fasteners shall conform to UL 96, classes as applicable.

PART 3 EXECUTION

3.1 INTEGRAL SYSTEM

3.1.1 General Requirements

The lightning protection system shall consist of air terminals, roof conductors, ground connections, and grounds, electrically interconnected to form the shortest distance to ground. All conductors on the structures shall be exposed except where conductors are in protective sleeves. Secondary conductors shall interconnect with grounded metallic parts within the building. Interconnections made within side-flash distances shall be at or above the level of the grounded metallic parts.

3.1.1.1 Air Terminals

Air terminal design and support shall be in accordance with NFPA 780. Terminals shall be rigidly connected to, and made electrically continuous with, roof conductors by means of pressure connectors or crimped joints of T-shaped malleable metal and connected to the air terminal by a dowel or threaded fitting. Air terminals at the ends of the structure shall be set not more than 2 feet from the ends of the ridge or edges and corners of roofs. Spacing of air terminals 2 feet in height on ridges, parapets, and around the perimeter of buildings with flat roofs shall not exceed 25 feet.

In specific instances where it is necessary to exceed this spacing, the specified height of air terminals shall be increased not less than 2 inches for each foot of increase over 25 feet. On large, flat or gently sloping roofs, as defined in NFPA 780, air terminals shall be placed at points of the intersection of imaginary lines dividing the surface into rectangles having sides not exceeding 50 feet in length. Air terminals shall be secured against overturning either by attachment to the object to be protected or by means of a substantial tripod or other braces permanently and rigidly attached to the building or structure. Metal projections and metal parts of buildings, smokestacks, and other metal objects that do not contain hazardous materials and that may be struck but not appreciably damaged by lightning, need not be provided with air terminals. However, these metal objects shall be bonded to the lightning conductor through a metal conductor of the same unit weight per length as the main conductor. Where metal ventilators are installed, air terminals shall be mounted thereon, where practicable. Any air terminal erected by necessity adjacent to a metal ventilator shall be bonded to the ventilator near the top and bottom. Where metal ventilators are installed with air terminals mounted thereon, the air terminal shall not be more than 24 inches away from the farther edge or corner. If the air terminal is farther than this distance, an additional air terminal shall be added in order to meet this requirement. Where metal ventilators are installed with air terminals mounted adjacent, the air terminal shall not be more than 24 inches away from the farther edge or corner. If the air terminal is farther than this distance, an additional air terminal shall be added in order to meet this requirement.

3.1.1.2 Roof Conductors

Roof conductors shall be connected directly to the roof or ridge roll. Sharp bends or turns in conductors shall be avoided. Necessary turns shall have a radius of not less than 8 inches. Conductors shall preserve a downward or horizontal course and shall be rigidly fastened every 3 feet along the roof and down the building to ground. Metal ventilators shall be rigidly connected to the roof conductor at three places. All connections shall be electrically continuous. Roof conductors shall be coursed along the contours of flat roofs, ridges, parapets, and edges; and where necessary, over flat surfaces, in such a way as to join each air terminal to all the rest. Roof conductors surrounding tank tops, decks, flat surfaces, and flat roofs shall be connected to form a closed loop.

3.1.1.3 Down Conductors

The structural steel framework of the structure shall be utilized as the main conductor for the lightning protection system, per NFPA 780, 3-16, Structural Steel Systems.

3.1.1.4 Interconnection of Metallic Parts

Metal doors, windows, louvers, roof ventilators, ladders and gutters at roof levels shall be connected directly to the lightning protection system using not smaller than No. 6 copper conductor, or equivalent. Conductors placed where there is probability of unusual wear, mechanical injury, or corrosion shall be of greater electrical capacity than would normally be used, or shall be protected. The ground connection to metal doors and windows shall be by means of mechanical ties under pressure, or equivalent.

3.1.1.5 Ground Connections

Ground connections comprising continuations of down conductors from the structure to the grounding electrode shall securely connect the down conductor and ground in a manner to ensure electrical continuity between the two. All connections shall be of the clamp type. There shall be a ground connection for each down conductor, per NFPA 780, 3-16. Metal water pipes and other large underground metallic objects shall be bonded together with all grounding mediums. Ground connections shall be protected from mechanical injury. In making ground connections, advantage shall be taken of all permanently moist places where practicable, although such places shall be avoided if the area is wet with waste water that contains chemical substances, especially those corrosive to metal.

3.1.1.6 Grounding Electrodes

A grounding electrode shall be provided for each structural steel column located as shown. A driven ground shall extend into the earth for a distance of not less than 10 feet. Ground rods shall be set not less than 3 feet, nor more than 8 feet, from the structures foundation. The complete installation shall have a total resistance to ground of not more than 50 ohms if a counterpoise is not used. Ground rods shall be tested individually prior to connection to the system and the system as a whole shall be tested not less than 24 hours after rainfall. When the resistance of the complete installation exceeds the specified value or two ground rods individually exceed 50 ohms, the Contracting Officer shall be notified immediately. A counterpoise, where required, shall be of No. 4/0 copper cable or equivalent material having suitable resistance to corrosion and shall be laid around the perimeter of the structure in a trench not less than 2 feet deep at a distance not less than 3 feet nor more than 8 feet from the nearest point of the structure. All connections between ground connectors and grounds or counterpoise, and between counterpoise and grounds shall be electrically continuous. Where required due to soil conditions, an alternate method for grounding electrodes in shallow soil shall be provided by digging trenches radially from the building. The lower ends of the down conductors or their equivalent in the form of metal strips or wires are then buried in the trenches.

3.1.2 Steel Frame Building

The steel framework shall be made electrically continuous. Electrical continuity may be provided by bolting, riveting, or welding steel frame, unless a specific method is noted on the drawings. The air terminals shall

be connected to the structural steel framework at the ridge per NFPA 780, 3-16. Where a grounded metal pipe water system enters the building, the structural steel framework and the water system shall be connected at the point of entrance by a ground connector. Connections to pipes shall be by means of ground clamps with lugs. Connections to structural framework shall be by means of nut and bolt or welding. All connections between columns and ground connections shall be made at the bottom of the steel columns. Ground connections to grounding electrodes or counterpoise shall be run from not less than one-half of all the columns distributed equally around the perimeter of the structure at intervals averaging not more than 60 feet.

3.2 INTERCONNECTION OF METAL BODIES

Metal bodies of conductance shall be protected if not within the zone of protection of an air terminal. Metal bodies of conductance having an area of 400 square inches or greater or a volume of 1000 cubic inches or greater shall be bonded to the lightning protection system using main size conductors and a bonding plate having a surface contact area of not less than 3 square inches.Provisions shall be made to guard against the corrosive effect of bonding dissimilar metals. Metal bodies of inductance shall be bonded at their closest point to the lightning protection system using secondary bonding conductors and fittings. A metal body that exceeds 5 feet in any dimension, that is situated wholly within a building, and that does not at any point come within 6 feet of a lightning conductor or metal connected thereto shall be independently grounded.

3.3 INSPECTION

The lightning protection system will be inspected by the CQCM to determine conformance with the requirements of this specification. No part of the system shall be concealed until so authorized by the CQCM.

-- End of Section --

SECTION 13150

SWIMMING POOL GENERAL REQUIREMENTS

PART 1 GENERAL

1.1 REFERENCES

The publications listed below form a part of this specification to the extent referenced. The publications are referred to in the text by basic designation only.

NATIONAL COLLEGIATE ATHLETIC ASSOCIATION (NCAA)

NCAA Aquatics	(2000) Swimming and Diving Men's and Women's Rules and Interpretation

1.2 DESCRIPTION

This Section specifies Contractor Qualifications and Responsibilities.

1.3 SUBMITTALS

Government approval is required for submittals with a "GA" designation; submittals having an "FIO" designation are for information only. The following shall be submitted in accordance with Section 01330 SUBMITTAL PROCEDURES:

SD-08 Statements

Contractor Qualifications and Responsibilities; GA.

Submit statements and information showing conformance with requirements specified herein.

Submit statement at completion of work of this Section verifying conformance to NCAA Aquatics requirements for Championship Competition.

1.4 CONTRACTOR QUALIFICATIONS

The Contractor shall show evidence of having adequate experience in constructing commercial pools. The Contractor shall have completed at least five (5) public use 25-Yard size pool with a concrete and tile gutter in conjunction with a self-modulating surge and balance tank system within the last 5 years. These pools shall have been in operation for at least one year. Submit a list of such projects with the name, address, and current telephone number of the Owner and Contracting Officer for reference.

1.5 QUALITY ASSURANCE

Pool work shall result in 25 yard and 25 meter pools. Pool work shall also result in workmanship conforming to the applicable requirements of the referenced standards of the NCAA for 25 yard and 25 meter competition pools. The Contractor shall provide adjustments to indicated tolerances of workmanship in other sections, including 03100 STRUCTURAL CONCRETE FORMWORK and Section 03300 CAST-IN-PLACE STRUCTURAL CONCRETE for pool work in order to conform to these requirements.

1.6 CONTRACTOR RESPONSIBILITIES

The Contractor shall be responsible for at least the following phases of the Work:

1. Providing labor, material, management and coordination of own personnel and specialty subcontractors experienced in commercial pool building to produce a functioning Swimming Pool including structure and equipment ready for public use upon completion of the Work.

2. Lay-out and excavation for pool and piping trenches.

3. Reinforcing steel placement, cast-in-place concrete pool shell and gutter.

4. Swimming Pool sealants and caulking.

5. Pool gutter and Surge/Pit Chamber Cementitious Waterproofing.

6. Deck equipment and inserts, tile work in pool and on deck edge, pool plaster, and gutter grating.

7. Pool filtration system and piping to pool, valves, pumps, chemical feed equipment, water level control system, and all items necessary to operate the entire system properly.

8. Swimming Pool and related equipment Start-Up as stated in Section 01810, COMMISSIONING OF SYSTEMS and Section 13153, SWIMMING POOL PLUMBING, MECHANICAL AND CHEMICAL EQUIPMENT including consecutive 14-day trouble-free operation.

PART 2 PRODUCTS

2.1 Not Used

PART 3 EXECUTION

3.1 Not Used

-- End of Section --

SECTION 13153

SWIMMING POOL PLUMBING, MECHANICAL AND CHEMICAL EQUIPMENT

PART 1 GENERAL

1.1 REFERENCES

The publications listed below form a part of this specification to the extent referenced. The publications are referred to in the text by basic designation only.

American National Standards Institute (ANSI):

ANSI A13.1	(1981) Scheme for the Identification of Piping Systems

American Society for Testing and Materials (ASTM)

ASTM D1785	(1981) Rigid Polyvinyl Chloride (PVC) Compounds and Chlorinated Polyvinyl Chloride (CPVC) Compounds
ASTM D1785	(1983) Polyvinyl Chloride (PVC) Plastic Pipe, Schedules 40, 80, and 120
ASTM D2464	(1976) Threaded Polyvinyl Chloride (PVC) Plastic Pipe Fittings, Schedule 80
ASTM D2467	(1976A) Socket-Type Polyvinyl Chloride (PVC) Plastic Pipe Fittings, Schedule 80
ASTM D2564	(1980) Solvent Cements for Polyvinyl Chloride (PVC) Plastic Pipe and Fittings

Manufacturers Standardization Society of Valves and Fittings Industry (MSS)

MSS SP-58	(1983) Pipe Hangers and Supports - Materials and Design
MSS SP-69	(1983) Pipe Hangers and Supports - Selection and Applicatio

1.2 SUBMITTALS

Government approval is required for submittals with a "GA" designation; submittals having an "FIO" designation are for information only. The following shall be submitted in accordance with Section 01330 SUBMITTAL PROCEDURES:

SD-01 Data

Pipe; GA
Fittings; GA
Valves, each type; GA
Piping specialties; GA
Sand Filters; GA
Pumps, each type; GA
Pump Strainers; GA
Inlet Filters and Outlet Grates; GA
Chemical Control Monitors; GA
Chlorine Feed Systems; GA
Acid Feed Systems; GA
Instrumentation and Controls; GA
Probe Sensors; GA
Chemicals; GA
Emergency Shower and Eyewash; GA.

Bound copies of all manufacturer's data.

SD-04 Drawings

Coordination Drawings; FIO

Submit complete set of Coordination Drawings, showing coordination and interface of all chemical feed lines, pool piping, pool equipment with other mechanical, electrical, plumbing, and any other work of other trades.

SD-14 Samples

Filter Media; G .

Submit one pound representative sample of each type (#20 and #30 if both are specified) filter media to the filter manufacturer for written approval. Submit two (2) copies of approval letter to Contracting Officer prior to loading media into filter vessels

SD-19 Operation and Maintenance Manuals

Sand Filters; G ;
Pumps, Each Type; G ;
Chemical Control Monitor; G ;
Chlorine Feed Systems; G ;
Acid Feed Systems; G ;
All Controls; GA

Submit copies of operating and maintenance manuals.

1.3 SCOPE OF WORK

Work of this Section includes furnishing and installing the following swimming pool plumbing, mechanical, and chemical equipment:

1. Pool piping and fittings, valves, strainers, hangers and supports, and identification.
2. Instrumentation and controls.
3. Sand filters.
4. Pumps.
5. Chemical control monitors.
6. Chlorine and Acid feed systems.
7. Pool system cleaning, start-up, and testing
8. Emergency Shower and Eyewash.

Related Work Specified Elsewhere:

1. Water supply, gas supply and waste services.
2. Electrical power services to pool equipment with final connections.

Description of Piping System:

1. Piping is shown in diagrammatic form to indicate work to be done, rather than show exact routing and locations. Make use of all data in Contract Documents, verify against developed field conditions, install work in an orderly arrangement in a manner to overcome structural interference.

2. Fixtures and equipment are laid out per requirements of one manufacturer. Modify work and arrangements to suit actual equipment installed.

3. Architectural and structural drawings take precedence over plumbing drawing in representation of general construction work; drawings of various trades take precedence in representation of work of these trades. Refer to all drawings for conditions relevant to this work.

PART 2 PRODUCTS

2.1 GENERAL

One or more manufacturer's names and catalogue numbers are listed for each item specified below. These names and catalogue numbers are listed to set the standard of quality, functionality and design required. Provide the specified item, or an equal product in appearance and performance from another manufacturer which meets or exceeds the standard of quality, functionality, and design as judged solely by the Contracting Officer.

2.2 PIPE AND FITTINGS

Pool Piping: Pool piping including overflow, fill line, drain piping, recirculating line, and chlorine circulating line shall be manufactured of compound meeting requirements for Type I, Grade I PVC in ASTM D1785. Pipe and fittings shall be Schedule 80 PVC unless otherwise specified. Compound from which pipe is produced shall have 2,000 psi design stress rating at 73° F, listed by Plastics Pipe Institute. Piping shall conform to ASTM ASTM D1785. Fittings shall be injection molded and conform to ASTM D2467

for socket type and ASTM D2464 for threaded type. Solvent cement for pipe joints shall conform to ASTM D2564.

2.3 VALVES

2.3.1 General

Provide end connections as indicated. Valves shall open when turned counterclockwise:

1. Ball Valves Sizes 1/2" Through 3": True union socket design suitable for use as a block valve, full port with replaceable Teflon ball seals and Viton stem and body seals, pressure rating of 150 psi at 73°F. Valves shall be manufactured of the same PVC Type I, Grade I molding compound as the fittings to assure compatibility.

2. Butterfly Valves Sizes 2" Through 10": PVC body with bubble-tight corrosion-resistant Viton liner, Viton "O" ring shaft seals, stainless steel shaft, polypropylene disc with manual operator; valves over 6" size gear operated. Asahi/American, or approved equal.

3. Butterfly Valves 12" Size: PVC body with bubble-tight corrosion-resistant Viton liner, Viton "O" ring shaft seals, stainless steel shaft, polypropylene disc with gear operator. Asahi/American, or approved equal.

4. Check Valves:

   a. Spring Check, Sizes 2 inch and Smaller: PVC body, non-slam, silent, spring check valve with stainless steel lift disc, Viton seals, stainless steel spring, 2 psi maximum pressure loss when fully open, rated working pressure of at least 125 psig, and threaded ends. Techno, or approved equal.

   b. Silent Check, Sizes 2 inch and Larger: PVC body and internals, non-slam, silent, spring check valve with stainless steel lift disc and body bolts, Viton seals, stainless steel spring and spring-loaded lift disc, 2 psi maximum pressure loss when fully open, rated working pressure of at least 125 psig, with flanged ends or flangeless wafer body of configuration and design for installation between ANSI B16.5 125 lb. flanges. Techno, or approved equal.

2.3.2 Modulating Valve

Cast iron body and cover, bronze trim, Buna A elastomeric rubber parts. Valve shall be hydraulically operated diaphragm-actuated, globe pattern with rubber disk with rectangular cross section contained on 3-1/2 sides by disk retainers and forming a tight seal against the removable seat insert. Diaphragm assembly shall contain a valve stem fully guided at both ends by suitable bearings integral with cover and valve seat. Diaphragm assembly shall be the only moving valve part and shall form a sealed chamber in

upper portion of valve, operating from line pressure. Diaphragm shall be reinforced; piston actuators are not acceptable. Valve shall have flanged end connections. Cla-Val Co. #100-01.

1. Float Control: Float actuated multiport pilot valve providing non-modulating, two position, on-off operation. Rod and hardware shall be stainless steel and float polypropylene. Cla-Val Co. #CF1, or approved equal.

2.3.3 Surge Chamber Float Valve

Series 500 stress relieved polypropylene wafer type body and disc designed for mounting between companion flanges in a horizontal position. The disc shall be mounted to the valve body by a single 0.625" diameter stainless steel shaft fitted with o-rings to reduce leakage. Two 7" diameter polyethylene floats attached to 0.50" diameter stainless steel float rods shall activate the valve and move vertically, supported by a bracket made from 2" x 2" x 1/4" pultruded fiberglass angle. The valve shall be 80% closed when the float assemblies are up and full open when the float assemblies are down. All attaching hardware, clevis assemblies, float retainers, spring pins, nuts, and bolts shall be stainless steel. Miami Tank, or approved equal.

2.4 STRAINERS

Y-Pattern with bronze body, socket ends, and pressure rating of 150 psi at 70°F. Strainer basket shall have an open area of at least twice the pipe size and permit maintenance without removing strainer body from the line. Mueller, or approved equal.

2.5 PIPING IDENTIFICATION LABELS

Plastic slip-on labels or tape with pressure-sensitive adhesive conforming with ANSI A13.1.

2.6 HANGERS AND SUPPORTS

MSS SP-58, with types as required MSS SP-69 and SMACNA and "Seismic Restraint Manual: Guidelines For Mechanical Systems, 1st Edition, 1991," published by SMACNA with OSHPD #R-0010.

2.7 INSTRUMENTATION

Pressure and Vacuum Gauges: Stainless steel case 2 inch diameter with phosphor bronze bourdon tube, brass connection and glass face. Scale readings of 0-60 psi for pressure and 0-30 inches of mercury. US Gauge, or approved equal.

Dial Thermometers: Stainless steel case and stem with 30°-130° F scale range and 3 inch diameter face. Letro #SL1-D, quantity as indicated in the drawings.

2.8 EPOXY COATING

All surfaces of all ferrous metals shall be grit blasted to white metal, then shall receive 3 to 10 miles of pneumatically applied epoxy: Engard 480, Keysite 740, Tnemec 104 or equal. All surfaces shall be inspected for proper mil thickness and pin holes or holidays.

2.9 POOL SAND FILTERS

2.9.1 Manufacturer:

Environmental Products Division, Models numbers as indicated in the drawings, or approved equal as manufactured by EDD, Kenloch, Stark, or approved equal.

1. The intent of this filter system specification is to establish a material and performance criteria that will benefit the owners and operators of said filter system. Certificated proof of materials and design, plus proof of performance and localized service, shall be a requirement of this specification.

2. The Filter system, specified herein, shall be the standard cataloged product of a company regularly engaged in the manufacture of industrial and commercial grade fully automatic horizontal configuration pressure type Hi-Rate Permanent Media filtration equipment.

3. The system shall consist of filter tanks, face piping with controlling valves, automated filter control device, gauges, hardware, air relief system, setting templates, printed installation, operation and service manuals, filter media and printed manufacturer's warranties.

4. Filter Performance Criteria: The filter system shall be of the pressure type, horizontal configuration, suitable for a single grade of filter media, and shall bear the listing mark of the National Sanitation Foundation (NSF) Standard 50 for a maximum flow of 20 gallons per minute per square foot of filter area.

5. The filter system shall consist of multiple Hi-Rate Permanent Media filter tanks each with a total effective filter area to 16.5 square feet. When operation at 15 gallons per minute per square foot of filter area , the filter system will have a capacity of filtering 89,100 gallons in 6 hours per filter tank. To minimize waste line sizes and reduce impact on waste water disposal systems, the maximum allowable backwash flow rate of the entire filter system shall not exceed 248 gallons per minute.

2.9.2 Filter Tanks:

Tanks: The filter vessel(s) shall be 36 inches in outside diameter with an overall length of 75 inches. This tank size allows for ease of installation, specified flow and backwash rates as well as ease of service.

1. The tank shall be designed for a maximum operating pressure of 100 psi and designed with a safety factor of 4 to 1 for minimum burst

pressure. The design shall also accommodate passage of 0 to 100 psi cycle test of 250,000 cycles without failure.

2. The tank shall incorporate a barrier/inner tank which will isolate the fluid contents of the tank to eliminate corrosion, intrusion or reaction. This inner shell shall be constructed of virgin FDA approved, high stress-crack resistant, polyethylene.

3. The tank outer shell shall be constructed of continuous fiberglass roving with a laminate matrix of pigmented epoxy resin with hardener.

4. The entire tank assembly shall be oven cured, following fabrication, to assure uniformity of strength. Following oven cure, the entire assembly shall be coated with a clear UV inhibiting urethane protective coating.

5. An 11 inch x 15 inch access manhole/viewing window shall be fitted at the front end of each tank, providing ease of access for media loading, service, and observation of media during operation. Side and top manholes will not be allowed, as they limit tank interior access.

6. The filter vessel shall be fitted with two (2) 4 inch grooved nipples located in the top side shell to serve as influent and effluent plumbing connection. One (1) three quarter inch (3/4") and one (1) two inch (2") port shall be fitted into the vessel. The two inch (2") ports shall be located in the lower portion of the tank to serve as a winterizing and/or media dump port connection. The three quarter inch (3/4") port shall be located in the upper most portion of the shell to serve as a manual air relief valve/port connection.

7. The filter vessel shall be supported by two (2) structural foam filled polyethylene saddles which shall accommodate seismic zone 4 installation. All necessary mounting hardware shall be provided along with an anchor bolt setting template for ease and accuracy of filter vessel installation.

2.9.3 Internal Distribution and Collection System:

The internal components shall be hydraulically balanced to prevent migration of the filter media during the filtration cycles and must uniformly fluidize the media in the backwash cycle without channeling or breakthrough at any one location

1. The influent distribution system shall consist of no less than ten (10) hydraulic distribution lenses, which shall be fabricated of ABS plastic and PVC pipe and fittings. Distribution system consisting of slotted pipes, or splash plates, will not be acceptable.

2. The collection system shall consist of PVC fittings, schedule 80 piping and molded ABS "V" slotted 12" long threaded laterals. The

laterals shall be capable off retaining a #30 grade filter media with minimum head loss. Laterals which are made from plastic pipe with saw cut slots will not be allowed. A minimum of twenty (20) molded laterals shall be utilized in each filter tank, assuring an even and complete fluidization of filter media during the backwashing cycle. The combined open area of the laterals shall not exceed velocity of six (6) feet per second at the designed filter flow rate. All internal components including main headers must be removable for repair and/or replacement should damage occur.

2.9.4 Air Relief System:

An internal automatic air bleed system shall be provided in the tank. An anti-plug protective shield screen shall be installed on each assembly. A manually operated external air relief valve shall be provided on the tank.

2.9.5 Winterizing/Drain and Media Dump Port:

In the front of the vessel shall be located a 3/4 inch drain fitting which shall allow the evacuation of all water from the tank for the purpose of winterizing or service. A 3/4 inch o-ring seal plug adapter shall be provided for ease of removal and replacement. No media will be allowed to leave the tank during the draining process.

1. The media dump port shall allow for the removal of all filter media from the vessel within 30 minutes. This dump port shall be a minimum of 2 inches in diameter and shall be installed in the front of each filter vessel, allowing for easy access

2.9.6 Backwash Valving and Piping:

Backwash Valve: One (1) two-way, three port 4 inch backwash valve shall be supplied on each filter tank. The valve body shall be machined from heavy cast bronze. Plastic valve bodies will not be considered for this industrial/commercial use. Victaulic type couplers shall be provided at each port of the valve for connection to the filter tank and manifold piping. The couplers shall be made 30% glass filled, color blended, Noryl. Each valve shall be fitted with a nominal 6 inch diameter piston operated hydraulic cylinder to actuate the valve. Electrically or diaphragm actuated valves will not be allowed. External valve linkage will not be allowed for safety and potential maladjustment reasons. The internal piston shaft shall be Type 302 stainless steel and shall be supported above and below the piston with Delrin guide bushings. A silicone impregnated felt wiper shall be provided for internal shaft quad ring lubrication. Exterior coating of the valve shall be 3 to 5 mils of an industrial grade of polyurethane, high gloss, beige finish All stainless steel components used in this assembly shall be passivated and rinsed after forming and machining.

1. The backwash valve shall be designed to allow for continuous circulation pump operation during the cycling between filter and backwash of the filter system. This requirement is for the prevention of potential loss of circulation pump prime and/or

damage to boiler, chemical feed systems and piping.

2.9.6.1 Priority Valve:

Provided on two tank filter systems. Optional accessory on three tank filter systems when operating at low rates below 15 gpm per square feet of filter area.

1. A hydraulically operated (4 inch) (6 inch) IPS piston type, tamper proof, valve shall be supplied for use on the effluent manifold. The priority valve shall be made of PVC. The priority valve shall be field adjustable, assuring the proper system flow rate. The priority valve shall operate automatically in concert with the system's backwash valves. External operating linkage, electrically or diaphragm actuated valves will not be allowed.

2.9.6.2 Flow Control Valve:

(Provided with 3 through 8 tank systems.) A rate of flow, control valve shall be provided for installation onto the effluent of the filter system. The valve shall be (4 inch) (6 inch) (8 inch) (10 inch) IPS and shall be of a tamper proof design, but field adjustable, assuring the proper system flow rate. The valve shall be made of PVC.

2.9.6.3 Piping:

The influent, effluent and waste manifolds shall be constructed of PVC Schedule 40 pipe and fittings. The influent and effluent manifolds shall be sized in accordance with the swimming pool piping sizes designated in the Construction Documents. The waste line shall be a 4 inch IPS manifold and shall be fitted with a waste control valve and clear 4 inch diameter sight glass assembly. The valve shall be of the tamper proof design and require a tool for backwash flow rate change. To minimize floor space requirements and provide unhindered access to Filter Control Microprocessor, backwash valves, media dump port and manholes, all piping shall be located on top of filter tanks. All piping shall be factory assembled and pressure tested. The assemblies shall then be coated with a material to prevent ultra violet ray degradation of the plastic which shall color match all other system components.

2.9.6.4 Backwash Flow Rate:

A 4 inch flow meter saddle with plug shall be provided and installed on the backwash piping following the filter system, per the filter manufacturer's instructions. The flow meter saddle will be used at time of system start-up to verify backwash flow rate.

2.9.7 Filter Control Microprocessor:

The filter control console shall govern the operation of the filter system with logic provided by a programmable microprocessor, and it shall also provide direct constant readouts for modes of operation, filter flow rate and filtered water temperature. Units which require scrolling to view modes of operation will not be allowed.

1. All components of the console shall be housed within a fully gasketed Nema 4x hinged non-conductive fiberglass plastic enclosure featuring internal and external locking devices, plus a full view window. The enclosure shall be color coated with a material to prevent ultra violet ray degradation which shall be color coordinated to match all other system components.

2. The control Microprocessor shall provide the following features and functions:

   a. 7 day/24 hr. on/off circulation pump time clock.
   b. 7 day/24 hr. backwash initiation time clock.
   c. Manual initiation of backwash (Push Button).
   d. Manual initiation of backwash (Dial).
   e. Adjustable differential pressure backwash initiation.
   f. Fail-safe monitor and shut down of main circulating pump should the backwash cycle not be completed on programmed time.
   g. Fail-Safe monitor, alarm and shut down of hydraulic operating pressure to multi-port valve which controls backwash valves, preventing filter system from entering into unwanted multiple backwashes.
   h. Uninterrupted main circulating pump operation during backwash cycle.
   i. Direct fired boiler cool down mode.
   j. Terminal hook-up board and switching to control accessory equipment.
   k. Battery backup to maintain time during power failure.
   l. Backwash counter.
   m. Digital direct readout flow meter in gpm or M /hr. with flow sensor, 25 foot cable and mounting saddle.
   n. Digital temperature readout in F. or C. with temperature sensor and 6 foot cable.
   o. Power input shall be 115 vac, 60 Hz/220 vac, 50 Hz.

3. The entire Filter Control Microprocessor shall be Underwriters Laboratories Inc. listed as a Filter Controller under Standard 508 Industrial Controllers.

2.9.8 Pressure Supply System:

An in-line "Y" strainer, 2-1/2" 0-100 psi pressure gauge and pressure regulator shall be supplied as part of the filter system. The pressure supply system shall clean and govern the pressure of the water used to actuate the filter systems' automatic valves

2.9.9 Pressure Amplification System:

A pressure Amplification System shall be provided and shall consist of a single suction centrifugal pump, hydro-pneumatic pressure sustaining tank, adjustable pressure switch, 50 feet of 3/8 inch Nylo Seal tubing and all necessary tubing connectors. This system effluent water for actuation of backwash valves.

1. Pump: The pump housing and impeller shall be made of molded fiberglass reinforced thermoplastic. A mechanical seal shall be provided between the pump housing and the motor. The seal shall be a precision lapped, highly polished carbon-ceramic stainless steel shaft seal, assuring drip proof protection.

   The motor shall be a (1/2HP, single phase, 60 cycle, 3450 RPM, suitable for service with a 115 volt Filter Control Microprocessor) (3/4HP, single phase, 50 cycle, 2800 RPM, suitable for service through a relay with the 24 volt output of the Filter Control Microprocessor). The motor shall be a NEMA 'C' face flange mounting with a drip proof enclosure. The motor shall be equipped with sealed ball bearings to provide for smooth, quiet operation.

   The booster pump shall be performance rated at 5 gallons per minute at 93 feet of head.

2. Tank: Pressurized water shall be contained in a hydro-pneumatic steel tank which shall be lined with an epoxy coating. The tank will employ a flexing diaphragm separating wet and dry chambers. The steel tank shall be designed for a maximum working pressure of 100 psi. Tank connection shall be 3/4" NPTM.

3. Pressure Switch: A pressure switch shall be mounted directly to the pump motor and shall be rated for the operation of a 1-1/2 HP motor at 115 volt, single phase. The switch will allow for adjustment of cut-in cut-out pressure.

4. Check Valve: A 1/2 inch spring loaded check valve shall be supplied as part of the assembly. The check valve shall be installed on the pump suction and shall be designed to retain water accumulated within the amplification system.

5. Tubing and Fittings: Fifty (50) feet of 3/8 inch Nylo Seal tubing, and all necessary tubing to pipe fittings, shall be supplied for the connection of the Pressure Amplification System to the filter system and the Filter Control Microprocessor

6. Finish: the entire system shall be coated with an industrial grade polyurethane high gloss protective finish, similar in color to that of the filter system.

2.9.10 Certification:

Certified engineering drawings and calculations will be required for structural strength of filter tank(s) and seismic loads. Proof of National Sanitation (NSF) and Underwriters Laboratories (UL) listings is also required

2.9.11 Gauge Panel:

A cast urethane gauge panel shall be mounted on the automatic filter control panel. It shall be fitted with two (2) 4-1/2 inch diameter 0-100

psi pressure gauges and a field settable differential pressure gauge/switch.

2.9.12 Hardware:

All fasteners (nuts, bolts, washers) employed in the system and components of the system shall be provided by the filter manufacturer, all of which shall be cadmium plated.

2.9.13 Instructions:

Printed and bound operating, installation and service manuals with exploded parts lists shall be supplied with the filter system.

2.9.14 Start-Up:

The manufacturer of the filtration system shall provide his services or those of his locally appointed factory representative at the time of commissioning and start-up of the filter system. The start-up shall include adjustments to the filter system and all of its controlling components, calibration and set up of the microprocessor and instructions to the owner and operators of the filter system.

1. The factory or its local service representative shall visit the filter system installation prior to the completion of one years service. With the Contracting Officer and User Representative, the factory/representative will inspect all of the filter system components for signs of wear/malfunction at that time. Any and all worn or malfunctioning items shall be replaced at no expense to the Government. The representative will thoroughly instruct the User Representative on annual service procedures for the filtration system, all at no expense to the Government.

2.9.15 Filter Media:

The filter media shall consist of uniformly graded silica sand with rough irregular edges, not rounded, which shall be free of limestone or clay. Twenty (20) cubic feet will of media per tank will be required, support media (gravel) will not be allowed.

2.9.15.1 #30 Sand (Indoor Pool)

Filter media shall be Grade #30, effective size .27 millimeter with a uniformity coefficient of 1.6 maximum.

MEDIA ANALYSIS

Sieve No. (U.S Series)	MM Opening	Percent Retained On Sieve(By Weight)
30	0.589 (0.023 in)	2
40	0.417 (0.016 in)	36
50	0.295 (0.012 in)	46
70	0.208 (0.008 in)	11

Sieve No. (U.S Series)	MM Opening	Percent Retained On Sieve(By Weight)
100	0.147 (0.0006 in)	5

2.9.16 Packaging:

To protect and safeguard all components of the filter system, they shall be supplied in wooden crates to facilitate shipment, handling and/or storage on job site..

2.9.17 Warranty:

A 10 year warranty shall be provided covering all components of the filter systems specified herein. The first (1st) year of the warranty period shall be unconditional. The second (2nd) year through the tenth (10th) year may be prorated

2.10 INDOOR POOL CIRCULATION PUMP

2.10.1 Manufacturer:

Provide Paco Pumps, model numbers as indicated in the drawings and as modified below, or approved equal as manufactured by ITT; Aurora, or approved equal.

2.10.2 Type:

Horizontal-mounted, bronze-fitted, end-suction, single-stage, close coupled, centrifugal pump with non-overloading characteristics for the capacity, head, and service indicated and complying with the following requirements:

2.10.3 Pump Casing:

Fuse coated on all wetted surfaces, foot supported, with flange connections, and constructed of close grain cast iron. Casing shall be provided with tapped and plugged holes for priming, venting, drain, and gage connections. Enclosed impeller shall be accurately machined and dynamically balanced, fitted to shaft with key.

2.10.4 Impeller:

Fuse coated, bronze single-suction enclosed type, statically and hydraulically balanced, enclosed impeller shall be accurately machined and dynamically balanced, fitted to shaft with key.

2.10.5 Seal:

Pump shall be provided with a single inside unbalanced mechanical shaft seal for leakless operation with suitable arrangement to provide adequate portion of the pumped liquid to lubricate and cool the seal faces. Mechanical seal shall be suitable for the service indicated. Stuffing box plate shall be so designed that pump can be converted readily to a packed stuffing box style.

2.10.6 Pump Base:

Pump shall be supported off of pump bracket and/or off motor feet

2.10.7 Pump Motor:

Grease-lubricated ball-bearing totally enclosed fan cooled induction type for the full voltage start, horsepower and voltage indicated. Motor horsepowers shown are estimated minimum and larger motors shall be furnished, if necessary, to meet the non-overloading requirements. Provide premium efficiency motor.

2.11 FLANGED PUMP STRAINER

2.11.1 Manufacturer:

Provide flanged pump strainer as required below as manufactured by Mermaid Manufacturing, or approved equal.

2.11.1 Strainer Housing:

Provide a strainer constructed of alternate layers of fiberglass fabric and resin, tested to 50 PSI. Flanges drilled to 150 lb. ANSI standard, inlet diameter to be full line size, outlet diameter to equal pump suction side flange.

2.11.3 Strainer Basket:

Provide stainless steel basket with 1/8 in. perforations and minimum total open flow area of not less than 4 times open area of the pipe size. Furnish one extra stainless steel pump strainer basket. O-ring seal made of ethylene propylene. Strainer lid to be clear acrylic to allow for inspection of basket without opening strainer.

2.12 12 in. X 12 in. MAIN DRAIN GRATES AND GUTTER DRAIN GRATES

Provide Hayward #SP-1032 as as modified herein, or approved equal. Drain grates shall be non-corrosive non-conductive cycolac grate and frame, 12 in. by 12 in. square with not less than 78 square inches of open area. Fit grate to frame flush with top surface and secure with 4 or more stainless steel vandalproof screws.

2.13 18 in. X 18 in. MAIN DRAIN GRATES

Provide Hayward #SP-1033 and as modified herein, or approved equal. Main drain gates shall be non-corrosive non-conductive cycolac grate and frame, 18 in. by 18 in. square with not less than 176 square inches of open area. Fit grate to frame flush with top surface and secure with 4 or more stainless steel vandalproof screws.

2.14 EYEBALL WALL INLET FITTINGS

Provide Swimquip #8429 and as modified herein, or approved equal. Eyeball

wall inlet fitting shall be 1 in. diameter orifice eyeball inlet fitting consisting of an ABS plastic body, retainer ring, directional ball type nozzle, 1-1/2 in. solvent weld connection, and construction shield. Body shall have an integrally molded flange around its outer perimeter which is buried in plaster, functioning as a waterstop. Secure eyeball to the body with four 18-8 stainless steel screws.

2.15 FLOOR INLET FITTINGS

Provide Swimquip #8417 and as modified herein, or approved equal. Floor inlet fittings shall be molded ABS plastic with an adjustable top plate having a position locking device and 2 in. solvent weld connection. Provide manufacturer's wrench for flow adjustment. Flow adjustment top plate shall permit full range of flow adjustment from closed to full open with a vandalproof locking device at quarter turn increments.

2.16 CHEMICAL CONTROL MONITORS (CCM)

2.16.1 Manufacturer:

Provide Strantrol, System 5 DVM/WSE/RAK, and as modified herein, or approved equal as manufactured by Acutrol or Chemtrol, as indicated.

2.16.2 Integrated Electronic System

An integrated electronic system shall be provided for each pool to continuously monitor, control, log and report via voice and digital data the pH level and chlorine residual of swimming pool water.

2.16.3 Substitutions

Requests for substitutions for the specified make and model will not be considered unless equal to the specified system in every respect. Requests for substitutions must include complete documentation relating to all the specified features and include manufacturer's sales literature, engineering drawings, and installation/operation/maintenance manuals. Failure to provide sufficient information to confirm that all specified features are provided will be cause for rejection of substitution request.

2.16.4 Monitoring and Controlling pH and Chlorine

The system shall be capable of monitoring and controlling pH and free available chlorine or bromine both with or without the presence of cyanuric acid (chlorine conditioner or stabilizer).

2.16.5 Description:

1. The controller shall be provided in a wall-mountable corrosion-proof non-metal cabinet with a key lockable, windowed door. Two 2 1/2" mirrored face panel meters shall continuously display pool water pH and chlorine levels. All AC line voltage connections shall be accessible only by removing a bolted protective cover.

2. Printed circuit boards shall be constructed of G10 flame-rated fiberglass and coated with a material impervious to moisture and atmospheric fumes containing chlorine or acid in order to protect electronics against corrosive damage. All control output circuits shall be protected with resettable thermal circuit breakers.

3. Face panel set level controls shall limit operator selection of control points within a range of 7.2 - 7.8 pH and 0.6 - 3. ppm chlorine. Controller output range shall be standard line voltage of not less than 10 amps for control of pumps and solenoid-operated valves. Automatic outputs shall be capable of being manually overridden with face panel mode switches. An internal switch shall be provided to allow for complete override in the event of electronic malfunction.

4. Controller shall be capable of being programmed for either standard on/off control or proportional control. Proportional feed logic shall automatically adjust the output of any standard feed system from 20% to 100% of maximum rated capacity, based on the unit's measurement of the rate of chemical consumption. Units allowing only on/off control, or requiring the use of special proportional-bank feed devices shall not be considered equal.

5. Controller shall be provided with audible and visual high and low pH and high and low chlorine alarms. High pH alarm shall prevent soda ash or hypochlorite feed. Low pH alarm shall prevent acid feed or gas chlorine feed. Any of these alarms shall activate a remotable master alarm signal.

6. An integral self-air purging sensing chamber with see-through inspection cover and sensing electrodes shall be housed in a separate, non-metal cabinet which shall receive the continuous-flowing sample stream. Cabinet shall be identical to control cabinet and have a key-lockable, windowed door.

7. Chlorine and pH sensors shall contain 50 milliliters of inorganic reference solution. The body of the electrodes shall be injection-molded plastic, and color coded for easy identification. The chlorine electrode shall have at least one square centimeter of 99.999% pure platinum.

8. Automatic Probe Rinse: Controller shall be provided with an automatic acid rinse system to clean sensing probes. System shall consist of one 6-gallon vapor-proof acid tank, one acid feed pump capable of pumping 10 gallons per day at 75 psi, and four-function anti-siphon/pressure relief valve. Pump shall be controlled by electronic programmable time clock that is integral with the controller circuitry and contains a rechargeable batter backup in the even of a power loss.

9. System shall be provided with paddlewheel-style flowswitch with see-through cover and "on stream" light. Flowswitch shall be non-corrosive, low voltage and be designed so as to be incapable of failing in the "on stream" mode.

10. Controller shall be equipped with an internal solid-state overfeed circuit that shall disable the appropriate chemical feeder(s) and energize an alarm circuit in the event of electrode failure, chemical feeder malfunction, improper valving of recirculation system, or depletion of chemical supply.

11. Chemical feed event indicator lights, power indicator light, and all alarm lights shall be light-emitting diodes.

12. Controller shall include a data voice telecommunicator that provides the following features:

    a. System shall record, by date and time, pH level, chlorine residual and any alarm occurrences. This information will be stored in the system for up to 6 months, until downloaded to a local or remote computer by the operator. Current pH, chlorine residual, and alarm status shall be accessible at all times by remote computer in data mode or by a standard touch tone telephone in the voice mode. In data mode, the system shall communicate with a remote computer using an integral modem and a user-supplied phone line. In voice mode, the system shall communicate the pH, chlorine, and alarm status to any standard touch tone telephone using an integral modem and voice synthesizer. Communication will be accomplished by calling the phone number of the user-supplied phone line and requesting the desired information by entering simple commands on the touch tone keypad.

    b. The system shall have 3 user programmable security passwords to limit access to those having the proper access code.

    c. In the event the system detects that chemical levels, flow rates, or other alarm conditions have violated their user selectable limits, it shall automatically begin an alarm dial-out sequence of up to 8 programmed telephone numbers. Each number can be designated as either a data line or voice line for alarm reporting purposes. Once an alarm sequence begins, the phone number will be called in order until one of them is answered and acknowledged by using an appropriate password. A continuously recharged battery shall be provided to allow the system to make alarm calls in the event of a power loss.

    d. Built-in diagnostics software shall allow a service technician to troubleshoot the system via remote computer.

    e. An on-board RS-232 connector shall allow for the connection of an optional serial printer, and integral software shall allow the operator to select whether reports are to be printed hourly or only when an alarm occurs.

    13. The entire controller shall be listed by Underwriters Laboratories Inc. (U.L.).

14. The unit shall be provided with an illustrated installation, operating and maintenance manual with drawings and detailed

written descriptions of all phases of controller function.

15. Check out of final installation, start-up calibration, and instruction of operating personnel shall be performed, on-site, by an authorized representative of the manufacturer.

16. Controller shall carry a 24-month limited warranty against defects in material and workmanship.

2.17 CHLORINE FEED PUMPS

2.17.1 Manufacturer:

Provide Liquid Metronics, Inc., (LMI) Model numbers as indicated and as modified herein, or approved equal

2.17.2 Type:

UL listed, positive displacement type manufactured for the purpose with anti-syphon/pressure relief valve and output adjustable while in operation to maximum capacity of 96 gallons per day (chlorine).

2.17.3 Adjustment:

Equipment controls with readily accessible knobs that control pump, one knob for adjusting stroke length and the other for adjusting the stroke frequency, metering pump control by selecting between internal-external pulsing by means of a 3-position center-off switch. External pulse circuit shall be 16 volts maximum. Chemical metering pumps, without using a hydraulically backed diaphragm, shall be capable of injecting chemicals against pressures up to 100 psig.

2.17.4 Drive:

Provide pump drive with no exposed moving parts, including a fully encapsulated solid state electronic pulser with no exposed printed circuit and supplied with quick connect terminals at least 3/16" wide. House all electronic parts in chemical resistant enclosure integral with pump for maximum protection against chemical spillage

2.17.5 Four Function Valve:

Equip pump with diaphragm type anti-syphon/pressure relief valve mounted pump head.

2.17.6 Pump Materials:

All parts and fittings shall be manufactured of chemical resistant materials. Pump housing shall be of glass fiber reinforced thermoplastic with polypropylene solenoid carrier. All exposed fasteners shall be of stainless steel. Metering pump valves shall be the ball type with ceramic balls seating on combination polytetrafluoroethylene plastic valve seat and seal ring; valve seat and seal ring shall be renewable by replacing only the combination seat-seal ring. The pump head shall be of transparent

acrylic plastic capable of resisting the pumped chemical. Fittings and connections at pump head shall be only polyvinyl chloride (PVC) and polypropylene.

2.17.7 Tubing and Devices:

Provide required length of polyethylene tubing with each pump, complete with compression fittings; all tubing shall have an integral ultraviolet inhibitor included in manufacture. Provide foot valve with integral 1-piece strainer at the suction line, and check valve at the injection point. Provide dilating orifice which prohibits scale formation and accumulation of crystalline deposits at the injection check valve. The test button shall be mounted on front panel. The solid state electronic unit shall have printed circuit board, to permit operation of external alarms and other equipment. One contact shall be for audible alarm and shall be acknowledgeable with the local acknowledgement button. Terminals shall be provided for wiring and additional separate switch for remote acknowledgement.

2.18 POOL CARBON DIOXIDE SYSTEM (CO2 System)

Provide Strantrol CO2, model numbers as indicated, and as modified herein, or approved equal.

For each pool, provide system for feeding and regulating carbon dioxide for pH reduction. System shall consist of a pressure reducing/automatic changeover valve, feed unit with rate of flow adjustment, diffusion injection fitting, duckbill check valve, and all necessary interconnection tubing.

Rate of Flow Adjustable Feed Unit: CO2 from the cryogenic storage tank shall be brought to the feed tank in thick wall 5/16 inch OD polyethylene tubing. Feed system shall include 120 volt AC solenoid operated valve for remote on/off control of CO2 feed unit shall also include rate adjusting flow meter scaled from 20-200 SCFH and have a pressure rating of 100 psi. Provide Strantrol #CO2-9 as modified herein, or approved equal.

Diffuser Injection Fitting: CO2 from feed unit shall be injected through 1 inch NPT fitting. Unit shall cause CO2 to be totally diffused and made to go fully into solution without evidence of CO2 bubbling at any point where water is open to atmosphere. Unit must be equipped with a duckbill type check valve to prevent the flow of water into the feed unit.

2.19 POOL CO2 FEEDER SYSTEM (CO2 Feeder)

Manufacturer: Eko3 PH-MTS CO2 Feed System.

Provide system for feeding and regulating carbon dioxide for pH reduction for each pool. System shall consist of a feed unit with rate of flow adjustment, Venturi fitting, duckbill check valve, and all necessary interconnection tubing.

Rate of Flow Adjustable Feed Unit: CO2 from the pressure reducing/automatic changeover valve shall be brought to the feed unit in

thick wall 5/16 inch OD polyethylene tubing. Feed system shall include 120 volt AC solenoid operated valve for remote on/off control of CO2 feed unit shall also include rate adjusting flow meter scaled from 10-50 SCFH and have a pressure rating of 100 psi.

Boost pump shall be provided as supplied by Eko3 Systems with Venturi fitting and necessary valves.

2.20 FLOW METER

2.20.1 Flow Measuring Device:

Provide Signet Scientific Co. #MK 515 and as modified herein, or approved equal. Sensor consisting of electromechanical volumetric flow transducer generating sine wave output of frequency and amplitude linearly proportional to paddle wheel rotation rate. Four permanent magnets imbedded in the paddle wheel shall pass a coil in the sensor body inducing alternating voltage proportional to rotation. Paddle wheel shall be open cell design to eliminate cavitation at flow velocities from 1.0 FPS to 50 FPS, with accuracy of ±1% over full range with a repeatability of ±0.5% over full range. Flow sensor shall send 0-225 Hz pulse (at one volt per one foot/second of flow velocity). Provide flow sensor in each return pipe. Insert flow sensor in pipe with PVC saddle fitting. Provide plug for insertion into pipe fitting when sensor is removed.

2.20.2 Flow Indicating Meter:

Provide Signet Scientific Co. #MK 509 and as modified herein, or approved equal. Meter shall show flow rate in gallons per minute, operating on signal generated by paddle wheel flow sensing device, and shall not require external power. Provide a 5-1/2 in. dial activated by a 250° damped meter movement within a waterproof case indicating flow within a scale range of 0-5,000 GPM. The 100 micro ampere meter movement shall provide accuracy of ±2% of full scale and repeatability of ±1% of full scale. Meter shall allow installation up to maximum of 200 feet from flow sensor location.

2.21 EMERGENCY SHOWER AND EYEWASH

Provide Haws 8300 as modified herein, or approved equal as indicated. Emergency shower and eyewash shall be overhead ABS plastic shower head, self-closing shower control with pull chain, stainless steel eyewash receptor, and stay-open eyewash control valve with foot-treadle and push-flag operation.

PART 3 EXECUTION

3.1 INSTALLATION

Install material and equipment as complete, convenient, and economical systems in conformance with drawings, approved submittals, and requirements specified.

3.2 PIPING

Unless specified otherwise, all piping fabrication, assembly, and installation shall conform to ANSI B31.1. Run the piping following the general arrangement indicated. Accurately cut pipe to measurements established on site and work into place without springing or forcing, except where cold-springing is indicated. Run piping out of the way of windows, doors, other openings, light fixtures, electrical conduit, equipment, and other piping. Run overhead piping in most inconspicuous places. Do not bury, conceal, or insulate piping until piping has been inspected, tested, and approved. Locate pipe joints where readily inspectable. Provide flexibility in piping connection to equipment for thermal stresses and vibration. Support and anchor piping connected to equipment for thermal stresses and vibration. Support and anchor piping connected to equipment to prevent strain from thermal movement and weight from being imposed on equipment.

1. Fittings: Use Schedule 80 molded PVC fittings. Mitering pipe to form elbows, notching straight runs to form full-sized tees, or similar construction is not permitted. Make all branch connections with tees.

2. Clearances: Provide adequate piping clearances from walls, ceilings, and floors. Provide at least 6" for pipe sizes 4" and less, 10" for pipe sizes over 4", and in corners with sufficient clearance.

3. Cleaning of Piping: Clean pipe before placing in position. Before final connections are made to apparatus, wash interior of all piping out thoroughly with water.

4. Identification of Piping: Identify piping in accordance with ANSI A13.1, using adhesive backed or snap-on labels and arrows. Apply to finished paint or insulation at intervals of not more than 50 feet. Provide two copies of the piping identification code framed under glass and install where directed.

5. Pipe Size Changes: Use reducing fittings for changes in pipe size. Use of bushings will not be permitted. In horizontal lines 2-1/2" and larger, use reducing fittings of the eccentric type to maintain the bottom of the lines in the same place.

6. Grading of Pipe Lines: Unless otherwise shown, install horizontal lines to slope down in the direction of flow with a pitch of not less than 1" in 30 feet, except in loop mains and main headers where the flow may be in either direction. Trapping of lines shall not be permitted except where indicated.

3.3 HANGERS AND SUPPORTS

Selection and installation of all piping hangers and supports shall conform to MSS SP-58, SMACNA, and MSS SP-69 for the intended temperature ranges. Conform sway bracing to ANSI B31.1 and "Seismic Restraint Manual: Guidelines For Mechanical Systems, 1st Edition, 1991" published by SMACNA with OSHPD #R-0010. Anchoring shall be as indicated.

3.4 VALVES

Install valves in accordance with ANSI B31.1. Install valves with stems horizontal or above. Install stop valves in supply lines and locate or equip to permit operation from floor level or provided with safe access in the form of walkways or ladders. Install all valves in positions accessible for operation and repair.

3.5 STRAINERS

Provide strainers with meshes suitable for the service where indicated and where dirt might interfere with proper operation of valve parts, orifices, or moving parts of equipment.

3.6 INSTRUMENTATION

Pressure Gages: Provide shut-off valve or petcock between each gage and the line.

Thermometers: Provide separate well or socket for sensing element of each thermometer and thermostatically controlled valve, so located as to minimize obstruction to flow.

3.7 EQUIPMENT FOUNDATIONS

Provide of sufficient size and weight, and of the proper design to preclude shifting of the equipment under operating conditions or under abnormal conditions which could be imposed on equipment. Foundations shall meet the requirements of the equipment manufacturer. When required by the Contracting Officer, obtain from equipment manufacturer approval of foundation design and construction for equipment involved. Equipment vibration shall be maintained within acceptable limits and shall be suitably dampened and isolated. Concrete foundations shall conform to Division 3 using 3,000 psi concrete. Provide minimum 4 in. high concrete pad for each floor mounted item.

3.8 EQUIPMENT INSTALLATION

Install each equipment item in accordance with the approved submittals and the manufacturer's installation instructions. Grout equipment mounted on concrete foundations before piping is installed. Install piping in such manner as not to place a strain on any of the equipment. Flanged joints shall not be bolted tight unless they correctly match. Provide valves in piping before and after all major pieces of mechanical equipment to allow isolation of the equipment for maintenance. Pool circulation pump and motor shall be re-aligned by the Contractor according to the standards of the Hydraulic Institute after grouting of stand and connection of piping.

3.9 PIPE SLEEVES

Refer to Section 07840 FIRESTOPPING. Provide Schedule 40 galvanized steel pipe sleeves for pipe penetrations through concrete and masonry walls, floors, and roofs, and 20 gage galvanized sheet steel sleeves for penetrations in framed walls and partitions; secure sleeves in position

during construction. Sleeves shall pass through the entire width of the walls, partitions, and slabs and be flush with the finished surfaces, except sleeves through floors shall project 1-1/2" above the finished floor. Provide sleeves 1/2" larger in diameter than the pipe or pipe insulation as applicable. Firmly pack the space between pipe or insulation and sleeve with oakum, and caulk both ends of sleeve with plastic cement. Furnish sleeves set in waterproof construction with flanges and clamping rings.

3.10 WATERSTOPS

All piping passing through the concrete walls or floor of water holding tanks and pits shall have a PVC flange type waterstop of full pipe size solvent welded on the pipe as indicated. Center the waterstop within the wall to form a labyrinth waterseal after concrete pouring.

3.11 ESCUTCHEONS

Set chrome-plated steel or nickel-plated cast iron plates on all pipes passing through floors, walls, ceilings, and partitions.

3.12 CLEANING OF SYSTEMS

Clean the various systems and their components as the installations are completed and before final closing. Remove all foreign matter from equipment and surrounding areas. Preliminary or final testing shall be permitted only in finished areas.

3.13 OPERATING EQUIPMENT

Ensure that moving parts of each assembly operate smoothly and easily throughout their entire operating range.

3.14 POSTED OPERATING INSTRUCTIONS

General: Provide a chart, at least 24" high by 36" wide, of minimum 3 mil thick mylar containing the information and instructions specified, mounted on a 1/16" thick white plastic laminate backing and covered with 1/8" thick transparent polycarbonate plastic sheet. Chart edges shall be framed with narrow stainless steel channels and made watertight. Mount chart on wall where directed by Contracting Officer using stainless steel fasteners and finishing washers. Chart shall show detailed isometric of piping, pumping, water heating, chemical and chlorine systems, controls, and other items forming a part of the swimming pool equipment, each valve and control identified as to the type and function. Include a printed detailed description and instructions for operating sequences. All information shall conform to approved submittal.

3.15 FIELD TESTS AND INSPECTIONS

3.15.1 General:

Contractor shall furnish all equipment and apparatus required for performing the inspections and tests, except water supplied by Owner, and

shall correct all defects and repeat respective inspections and tests, as required for final approval. Conduct testing and inspecting under observation of the Owner or Contracting Officer.

3.15.2 Test Gages:

Pressure test gages shall be currently certified as being accurate to within 1 percent of their full scale. Use gages with maximum scale between 1-1/2 and 2 times the test pressure.

3.15.3 Factory Tests:

Factory test prefabricated piping sections and fittings to ensure compliance with this specification and to prove integrity of joints. Submit certified factory test reports

3.15.4 Field Inspections:

Prior to initial operation, the piping system shall be inspected for conformance to Drawings, Specifications, and ANSI B31.1

3.15.5 Field Tests:

1. Pressure Tests: Hydrostatically test all water piping systems. Do not pneumatically pressure test. Conduct tests in accordance with ANSI B31.1 and as follows. Test piping systems after the lines have been cleaned as hereinbefore specified. Test the piping system at a pressure of 100 psi with water not exceeding 100°F. Before tests, remove or isolate gages, traps, and other apparatus subject to damage by test pressure. Install calibrated test gage in system to observe any loss of pressure. Close off system and retain required test pressure for one hour minimum and inspect all joints and connections for leakage. Maintain a pressure of 30 psi in all lines throughout the remaining construction period. Each trade should verify the 30 psi pressure before and after completion of Work to insure piping integrity. All failures shall be satisfactorily repaired and the complete test performed again.

2. Equipment and Material: Equipment and material certified as having been successfully factory tested to the manufacturer's performance criteria need not be field tested but shall be demonstrated to operate correctly.

3.16 START-UP SPECIFICATIONS

3.16.1 System Start-Up and Operational Test:

Start up the entire system and operate all components for not less than 14 consecutive days. During this time, periodically clean strainers until no further accumulation of foreign material occurs, and add chemicals as required for acceptable water quality. Adjust all safety and automatic controls for proper operation and sequence. Immediately repair and correct all deficiencies during the operational test and continue the test until 14

days of satisfactory performance has occurred without any defects. After successful conclusion of operational testing, clean strainers, backwash filter media, and leave the entire pool systems ready for use. Systems shall be maintained until final acceptance

3.16.2 Chemical System Start-Up:

Furnish services of a factory trained representative for initial start-up of the chlorination system and C[illegible] System. Representative shall also instruct Owner's personnel on the operation and maintenance of this equipment. Representative shall provide a follow-up inspection of the system 90 days after start-up providing any further instruction required to the Owner's personnel

3.16.3 Pool System Commissioning:

See Section 01810 for requirements

3.16.4 Pool Operator Training:

The Contractor shall furnish the services of a qualified/credentialed instructor experienced in all facets of mechanical room operation, water chemistry, and water care to train the Owner's personnel in the operation and maintenance of the Work under this Section. This does not relieve individual suppliers' and manufacturers' representatives from responsibility for instruction on individual systems as specified hereinbefore. Perform training, which shall include classroom and equipment room instruction, for a minimum of 16 hours and at the time and place designated by the Owner, which will be about the two-week point prior to completion of Work of this Section when the pool is filled and all systems are tested and fully operable. Inform Owner in writing of the proposed training period approximately one week prior to class date, and therein request the names of all Owner's personnel to receive training.

-- End of Section --

SECTION 13154

SWIMMING POOL EQUIPMENT

PART 1 GENERAL

1.1 REFERENCES

The publications listed below form a part of this specification to the extent referenced. The publications are referred to in the text by basic designation only.

American Society for Testing and Materials (ASTM)

ASTM A312	(1983) Seamless and Welded Austenitic Steel Pipe
ASTM A666	(1982) Austenitic Stainless Steel Sheet, Strip, Plate, and Flat Bar for Structural Application

1.2 SUBMITTALS

Government approval is required for submittals with a "GA" designation; submittals having an "FIO" designation are for information only. The following shall be submitted in accordance with Section 01330 SUBMITTAL PROCEDURES:

SD-01 Data

Handrails; GA. Grab Rails; GA. Recessed Steps; GA. Wall Anchors; GA. Stanchion Posts and Sockets; GA. Concrete-Filled Access Covers; GA. Disabled Access Lift and Socket; GA. Racing Lanes and Reels; GA. Outdoor Pool Cover; GA. Portable Vacuum; GA. Underwater Lights; GA. Pool Water Testing Kit; GA. Safety Equipment; GA. Stating Platform and Anchors; GA. Water Polo Goals; GA, Floating Water Polo Goals; GA. Reacall Rope; GA, Electrical Loads; GA .

Submit five (5) bound copies of manufacturer's data, including operation and maintenance instructions as applicable.

1.3 QUALITY ASSURANCE

Equipment Quality: Swimming pool equipment shall be standard products manufactured for service in public and commercial swimming pool installations and shall have a proven record of satisfactory service.

PART 2 PRODUCTS

2.1 MATERIALS

2.1.1 Stainless Steel:

ASTM A312, ASTM A666, and AISI Steel Products Manual, of finish and gage as specified or indicated.

2.1.2 Plastic:

Acryonitrile-butadiene-styrene (ABS) molded plastic, type known commercially as "cycolac".

2.1.3 Metal Finishes:

Chromium plated metal finish shall conform to Fed. Spec. WW-P-541/GEN. Bronze surfaces to remain exposed shall be chrome-plated unless otherwise indicated or specified. Anodized finish on aluminum shall conform to AA Designation System for Aluminum Finishes and Standards for Anodized Architectural Aluminum, Type A41, Class I, except shall be special anodized finish known commercially as "hard-coat" for use in marine environments, clear finish unless otherwise specified.

2.1.4 Fasteners:

Fasteners shall be corrosion resistant material, 300 series stainless steel or bronze, same as the metal being attached or secured unless indicated or specified otherwise.

2.2 HAND RAILS

2.2.1 Stainless Steel:

Type 304 tubing, 1.90 in. O.D. by 0.109 in. wall thickness, finished to 320 grit with bends smooth and wrinkle free, welded joints, sizes as indicated and vertical risers on indicated centers, and secured to the deck and lower step in cast bronze anchors covered with escutcheons. KDI Paragon, custom, or approved equal.

2.2.2 Anchor Sockets:

Anchor sockets shall be bronze castings, 4-1/4 in. long, with locking bronze wedge, and stainless steel bolt and washer. Socket shall have four anchoring feet at its base which extend into the concrete and be tapped for attachment of bonding wire. KDI Paragon #28102 or approved equal.

2.2.3 Escutcheon Plate:

Provide at each anchor socket escutcheon plate, KDI Paragon #28301, or approved equal. Eschutcheon plates shall be satin chrome plated bronze with locking set screw.

2.3 GRAB RAILS

2.3.1 Stainless Steel:

Grab rails shall be Type 304 tubing, 1.90 in. O.D. by 0.145 in. wall thickness polished to 320 grit, sizes as indicated and vertical risers on indicated centers, and secured to the deck and lower step in cast bronze anchors covered with escutcheons. Provide paired custom grab rails as manufactured by KDI Paragon, or approved equal where indicated.

2.3.2 Anchor Sockets:

Anchor sockets shall be bronze castings, 4-1/4 in. long, with locking bronze wedge, and stainless steel bolt and washer. Socket shall have four anchoring feet at its base which extend into the concrete and be tapped for attachment of bonding wire. Provide anchor sockets for each post of each grab rail, KDI Paragon #28102, or approved equal.

2.3.3 Escutcheon Plate:

Provide at each anchor socket escutcheon plate, KDI Paragon #28301, or approved equal. Eschutcheon plates shall be satin chrome plated bronze with locking set screw.

2.4 RECESSED STEPS

Provide where indicated recessed steps, KDI Paragon #32102, or approved equal. Recessed steps shall be molded white "cycolac" plastic with 1/4" nominal wall thickness, 15-1/2" wide step and non-slip texture on step surfaces. Step shall mount flush with wall and have no protrusions into the pool.

2.5 CUP ANCHORS

Provide where indicated cup anchors, KDI Paragon #70316, or approved equal. Cup anchors shall be chrome plated cast bronze body and eyebolt formed with 1/2 in. diameter metal and 3/4 in. diameter eye, and 5/8-11 by 1 in. long threaded shank.

2.6 STANCHION POSTS AND SOCKETS

Stanchion Post Socket: Provide where indicated KDI Paragon #38201 and as modified herein, or approved equal. Stanchion post sockets shall be flush fitting cast bronze body 6 in. deep with bottom flange. Upper end shall be threaded internally for flush fitting screwed bronze plug. Each socket shall accept 1-1/2 in. IPS (1.90 in. O.D.) pipe or tube. Provide bronze plug for each socket, plug having two holes drilled on upper surface to engage a spanner wrench.

Stanchions: Provide KDI Paragon #38106 and #38301, and as modified herein, or approved equal. Stainless steel, Type 304, 1.90" O.D. x 0.145" wall, 8 feet long with top closure plug and eyebolt, and sliding collar with eyebolt. Stanchion post shall fit socket required above. Provide 10 (10) stanchions.

2.7 STARTING PLATFORM AND ANCHORS

Manufacturer: Provide KDI Paragon #22124 and as modified herein, or

approved equal.

Provide starting platform anchors at locations indicated. Provide a total of 17 platform steps/pedestal assemblies.

2.7.1 Type (Option OP109):

Units 24 inch wide x 20 inch deep, supported by sloping stainless steel pedestals. Provide an intermediate step 8 inch x 12 inch and backstroke bar.

2.7.2 Platform and Steps (Option OP109)

Of 1-1/2 inch thick wood core covered with fiberglass and polyester resin, and an integral non-skid surface on platform and step. Top of platform shall be 30 inch above the water and tilt 10 degrees toward pool.

2.7.3 Platform Supporting Pedestal (Option OP109):

Stainless steel tubing 1.90 inch O.D. by 0.145 inch wall thickness. Backstroke bar and step shall be supported on stainless steel tubing 1.5 inch square z 0.065 inch wall thickness. The backstroke bar shall be stainless steel tubing 1 inch O.D. x 0.065 inch wall thickness with handgrips at each end set 22 inch above the water. All stainless steel tubing shall be Type 316, welded and polished to 320 grit.

2.7.4 Anchors (Provide in Base Bid):

Anchor starting platform in a single socket assembly including cast bronze socket with a flush mounting surface plate designed to provide a smooth walking surface when the platform is stored.

2.8 CONCRETE FILLED ACCESS COVERS

Fabricate frames of stainless steel shapes as detailed, all joints and connections fully welded and welds ground smooth and flush. Provide stainless steel lifting hardware custom fabricated as indicated or required.

2.9 PORTABLE LIFEGUARD CHAIRS (Option OP109)

Provide five (5) KDI Paragon #20302 and as modified herein, or approved equal. Provide movable chair with molded plastic seat 6 feet above the deck. Seat shall be mounted on a platform of laminated Douglas Fir coated with polyester resin and fiberglass. Platform top shall be reached by a 26" wide sloping ladder at front of the chair. Framework of chair shall be rigidly bolted and fabricated of type 304 stainless steel tubing, 1.90" O.D. by 0.065" wall, polished to 320 grit. Steps shall be injection molded ABS 26" long 5" wide with raised non-skid pattern. Two wheels, of at least 6" diameter with semi-pneumatic tires, shall be mounted at bottom of each front leg. Bottom ends of each front leg shall be bent laterally 9" to provide extra stability for chair. Rear legs shall be fitted with rubber bumpers.

2.10 USER OPERABLE HYDRAULIC DISABLED ACCESS LIFT (Option OP109) AND

SOCKETS (provided in Base Bid) (for use at Pools)

Lift: Provide at each pool Aquatic Access Model #IGAT-180 customized to 7" pool edge to socket dimension, or approved equal. Hoist shall be a standard product unit complete with hydraulic jack cylinder with operating handle, stainless steel seat hoist chain and hardware, reinforced nylon or ABS plastic seat, and related hardware. Post, lift arm, and other structural elements shall be stainless steel, and all pivot and rotation points shall operate smoothly by means of sealed bearings or equivalent, with 24" stainless steel self-turn ratchet handle and upper and lower controls. Independent operation must include automatic 180 degree rotation over deck for safe wheelchair transfer, 42" vertical seat . .Installed lift should not extend into the water nor over the water surface when not in use. The water powered lift shall be operable with a garden hose controlled by a three way ball valve. Lift unit shall have a rated capacity of not less than 300 pounds at 38 psi.

Socket: Provide stainless steel sockets as indicated with threaded plug and provisions for bonding; but not less than three (3) sockets, one (1) at the each pool edge and one (1) in the pool storage room for convenient storage. Install lift sockets where pool wall vertical dimension down from deck level (not including radius to pool floor) is minimum 36".

2.11 RACING LANES AND REELS

2.11.1 Manufacturer:

Kiefer McNeil Competitor, or approved equal.

2.11.2 Lanes (Option OP109):

Injection molded plastic disks, 4-1/4" diameter, with radial flanges and peripheral ring. Assemble on 3/16" diameter vinyl covered stainless steel cable equipped with stainless steel end hooks and line tensioning device of correct type for connection to anchor units. Provide two 14" stainless steel extension hooks per lane. Flotation elements shall be incorporated to make the lane buoyant. Racing Lane colors shall be alternating, as selected by Contracting Officer. Provide quantities as listed below:

Quantity: 19; Size: 25 Yard; Model No.: 200-330.

2.11.3 Storage Reels (Option OP109):

Provide six (6) storage reels for lanes, Kiefer McNeil #200-350 and #200-351, or approved equal. Reels shall be heavy duty aluminum frame equipped with 5" rubber tires, and swiveling wheels with brake locks. Provide the manufacturer's standard vinyl cover and operating hardware for each reel.

2.12 PORTABLE VACUUM SYSTEM (Option OP109)

2.12.1 Manufacturer:

Provide one (1) Maxi-Sweep III, or approved equal portable vacuum system

and as required below.

2.12.2 Cart (Option OP109):

Provide cart for portable vacuum system. Cart shall be heavy-duty, 1 in. tubular frame, .083 wall thickness, 3/16 in. bottom plate steel, 1/8 in. x 1 in. formed fit strap on a stair climbing cart with 4.10 x 3.50 x 4 in. wheels and non-marking pneumatic tires, gray, non- marking rubber bumper strip, made of naturally cure rubber compound, with 1/8 in. x 3/8 in. x 22 in. long metal insert, one each mounted on front and rear edge, mounted with four aluminum anti-rust rivets, 3/16 in. diameter with 5/8 in. large flange, on a 600 pound payload, rust inhibiting polyester polyurethane, thermal set powder coated cart.

2.12.3 Pump (Option OP109):

Provide heavy-duty, 2 in. self priming, rust inhibiting polyester polyurethane thermal set powder coated cast iron pump, rated 8,000 gallons per hour, water flow.

2.12.4 Filter System (Option OP109):

Provide filter system. Filter system shall be stainless steel filter canister with three (3) 5 in. diameter x 24 in. long removable, washable, Dacron filter cartridges that have a flow rate of 225 square feet per minute, with a pressure gauge and air relief valve, and stainless steel "V" tabs for mounting on a cart. Provide one (1) complete spare set of filters for government maintenance.

2.12.5 Hair and Lint Strainer (Option OP109):

Provide 8 in. heavy-duty rust inhibiting polyester polyurethane, thermal set powder coated cast aluminum hair and lint strainer pot with casted 2" hose adapter inlet nipple, straight across a 2" outlet into the pump. The entire hair and lint pot including the top, fastened by the two stainless steel 3/8" (16 threaded) large, star head bolts, shall be coated with Oxyplast Urethane powder coatings, for extreme durability. The Urethane coatings shall be high impact, abrasive, chemical solvent, and salt resistant. A removable, large capacity, rubber coated, metal strainer basket shall be included.

2.12.6 Vacuum Head (Option OP109):

Provide 42 in. width, Polyethylene plastic, contouring, surface conforming, vacuum head with three, 1 1/2 in. intake points that go into one manifold with a 2 in. outlet, including a stainless steel pole adapting snap handle, and standard wheels, with a 1 in. adjustability.

2.12.7 Power:

Portable vacuum shall operate on electric 110 volt AC, single phase 30 amp circuit.

2.12.8 Warranty :

One year. (Excluding hoses and poles)

2.12.9 Accessories (Option OP109):

Provide two (2) 12' x 23' telescopic poles that connect with each other with a slide-on riveted cam, and a 2" x 50' heavy-duty vacuum hose.

2.13 WALL BRUSH (Option OP109)

Provide one (1) heavy duty 24 in. wide brush with nylon bristles on a 16' single piece anodized aluminum pole and heavy duty stainless steel wall hooks and fasteners for hanging, as manufactured by KDI Paragon, or approved equal.

2.14 UNDERWATER LIGHTS

Manufacturer: StaRite SunBrite 500W halogen lights, or approved equal.

Provide where indicated, lights, niches and face ring of 300 Series stainless steel, with waterstop on niche. Pool lights shall be UL listed, 500 watt halogen for Pool, 120 volts, with three No. 16 conductors and waterproof cords of required lengths. Underwater lights shall conform to NEC Article 680-20.

2.15 WATER POLO GOALS

Provide two (2) water polo goals as required below, KDI Paragon #36102 or approved equal.

2.15.1 Frame (Option OP109):

Type 316 stainless steel tubing 1.90 inch O.D. x 0.049 inch wall thickness, polished to 320 grit finish. All connections and fittings shall be stainless steel or chrome-plated bronze. The goal fascia shall be 3 inch x 2 inch angle of 6061-T6 aluminum alloy finished with urethane coating.

2.15.2 Net (Option OP109):

Vinyl-coated nylon.

2.15.3 Anchors (Provided in Base Bid):

Provide water polo goal anchors as required for goal to match stantion post sockets as specified above, KDI Paragon #38201, or approved equal.

2.16 FLOATING WATER POLO GOALS (Option OP109)

Provide two complete floating water polo goals, Anti-Wave or approved equal. Floating water polo goals shall be aluminum tubing frame with 3 inch x 2 inch face and 1-1/4 inch diameter rear supports. Floatation frame shall be fiberglass with ethafoam floatation. Provide vinyl-coated nylon net and anchoring side lines with floats meeting regulations and end hooks.

2.17 POOL WATER TESTING KIT (Option OP109)

Provide one (1) pool water testing kit, Taylor Professional ##1741-STR, or approved equal. Water testing kit shall be portable, multi-combination test kit for chlorine pools, including five separate hand-crafted comparator slides [low chlorine (0.0 - 3.0 ppm), high chlorine (1.0 to 10.0 ppm), pH (6.8 to 8.4), copper (0.0 - 3.0 ppm), and iron (0.0 - 2.0 ppm)] and approved pool test reagents for total alkalinity, calcium hardness, total hardness, cyanuric acid and acid/base demand. Kit shall have 9 chlorine determinations in 0.0 to 3.0 ppm range, all liquid DPD reagent system, and 9 pH determinations from 6.8 to 8.4 and packaged in a rigid waterproof carrying case.

2.18 BACKSTROKE PENNANTS (Option OP109)

Provide two (2) 100 ft. long backstroke pennants, KDI Paragon #40102 or approved equal. Backstroke pennants shall be triangular pennants 12 in. wide and 18 in. long of alternating colors spaced 27 in. apart on a 3/8 in. polypropylene rope. Colors alternating blue and white.

2.19 SAFETY EQUIPMENT

2.19.1 Ring Buoy (Option OP109):

Provide five (5) ring buoys, Aquality Model 23006, or approved equal, located as directed by Contracting Officer. Ring Buoys shall be Coast Guard approved 24 in. O.D. solid closed cell plastic with vinyl coating and rigging. Provide each buoy with a 3/8 in. polypropylene throw line 80' in length and heavy duty stainless steel wall hooks and fasteners for hanging buoy and rope.

2.19.2 Body Hook (Option OP109):

Provide five (5) pool body hooks, Aquality Model 10138 & 4004, or approved equal, located as directed by Contracting Officer. Body hook shall be anodized aluminum hook with 16' single piece anodized aluminum pole and heavy duty stainless steel wall hooks and fasteners for hanging.

2.19.3 Safety Rope (Option OP109):

Provide two (2) 12 ft. and two (2) 25 ft. 3/4 in. diameter polypropylene rope with chrome plated bronze end hooks and locking polyethylene floats spaced at 4' maximum.

2.20 RECALL ROPE (Option OP109)

Provide one (1) 125 ft. 3/8 inch polypropylene rope. Treat ends to prevent raveling. Provide stainless steel wall hook and fasteners. Locate as directed by Contracting Officer.

PART 3 EXECUTION

3.1 INSTALLATION

Provide as shown on Drawings, specified, and in accordance with the approved submittals. Anchor units securely with corrosion-resistant fasteners of size and type indicated or required.

3.2 WELDING

Welds shall be ground smooth and polished. All welding shall be done by heli-arc method by certified welders using electrodes of same alloy as metal being welded and methods that prevent carbon pick-up in stainless steel.

3.3 BONDING

All concrete embedded metallic items in the pool shell and in the deck within 5 feet of the pool wall shall be bonded together. Bond with #8 copper conductor and copper pressure connectors. Items include, but are not limited to, anchors, grates, sockets, ladders and light niches.

3.4 UNDERWATER LIGHTS

Verify electrical loads and include in submittals. Grounding and bonding of underwater lights shall conform to NEC Article 680-20. Each light shall be tested and verified with a GFI tester, prior to filling the pool.

-- End of Section --

SECTION 13158

HYDROTHERAPY POOL

PART 1 GENERAL

1.1 DESCRIPTION OF THE WORK

Provide where indicated a free standing hydrotherapy pool. Hydro therapy pool shall include, but is not limited to laminated wood frame, solid and window tank wall panels, tank floor system, tank liner, heating system, filtration and chemical treatment system, together with all plumbing, electrical and control systems for a complete operating system.

Hydrotherapy pool shall be 96 inches wide by 120 inches long interior (tank) dimensions with a minimum water depth of 48 inches. Top of water shall be 6 inches minimum and 8 inches maximum below top of tank. Maximum overall unit dimensions shall not exceed 113 inches wide by 139 inches long by 60 inches high.

1.2 SUBMITTALS

Government approval is required for submittals with a "GA" designation; submittals having an "FIO" designation are for information only. The following shall be submitted in accordance with Section 01330 SUBMITTAL PROCEDURES:

SD-01 Data

Hydrotherapy Pools; GA.

Submit complete product data consisting of complete printed manufacturer's product description and specifications, complete technical characteristics and performance test data, and other pertinent technical data required for complete product and product use information.

SD-04 Drawings

Hydrotherapy Pools; GA.

Submit complete shop drawings for approval showing general arrangement of the hydrotherapy pool and equipment, and specific details of materials, finishes, construction, installation, and anchorage including related work by other trades sufficient to fully describe the proposed design and installation. Include detailed information regarding rough-in and other preparatory work by other trades related to the hydrotherapy pool installation.

SD-19 Operation and Maintenance Manuals

Hydrotherapy Pools; FIO.

Submit in accordance with the requirements of Section 00800 SPECIAL CONTRACT REQUIREMENTS detailed instructions indicating operation of each item and proper and recommended maintenance and cleaning instructions. Include as-built wiring and control diagrams for each component and for entire system.

1.3 REQUIREMENTS OF REGULATORY AGENCIES

Comply with health and building department, and all other state and local authorities having jurisdiction, and obtain all necessary permits, pay all fees, obtain all required inspections, and carry out all required tests which are required by such authorities.

1.4 GUARANTEE

The Contractor shall obtain in the Owner's name the standard written manufacturer's guarantee of all materials furnished under this Section where such guarantees are offered in the manufacturer's published product data. All these guarantees shall be in addition to, and not in lieu of, other liabilities which the Contractor may have by law or other provisions of the Contract Documents.

Under these requirements, the hydrotherapy pool manufacturer and hydrotherapy pool installing firm shall jointly and severally furnish to the Owner, a written warranty that the materials and workmanship of the apparatus installed under this Section shall be first class in every respect, and that they will make good any defects in materials or workmanship not due to ordinary wear and tear or improper use that may develop for the length of time listed below from date of certification for operation by state and/or local authorities, whichever is later:

1. Pool Structure: Ten (10) years.
2. Pool Liner: Five (5) years.
3. Mechanical Equipment: One (1) year.

This guarantee is not intended to supplant normal maintenance service and shall not be construed to require free service for periodic examination, or adjustment due to normal use beyond that included in the Specification; nor correction without charge, of breakage, maladjustments, or other trouble arising from abuse, misuse, improper or inadequate maintenance, or any other causes beyond the control of the hydrotherapy pool manufacturer and hydrotherapy pool installing firm.

1.5 WARRANTY CALL BACK SERVICE

The hydrotherapy pool manufacturer and hydrotherapy pool installing firm shall jointly furnish warranty call back service for a period of one year after the date of certification for operation by state or local authorities, whichever is later. Warranty call back service shall consist of immediately providing warranty service calls requested by the Government.

The hydrotherapy pool installing firm shall provide all labor, materials,

and equipment required for replacing all parts which become defective within one year after date of Substantial Completion of Project at no cost to the Government, except that defects due to misuse, accidents, or negligence on the part of the Government will not be considered to be covered under the maintenance guarantee.

All work under the warranty call back provision shall be performed by competent personnel under the supervision and in the direct employ of the hydrotherapy pool manufacturer or hydrotherapy pool installing firm. Work shall be done during the regular working hours and days, but emergency call back service shall be available at all times.

1.6 ADDITIONAL REQUIREMENTS

The hydrotherapy pool manufacturer or hydrotherapy pool installing firm shall be responsible for examining all conditions on the Drawings and in the Specifications and the governing laws and health and building codes, and to assume all costs in connection with this Contract, including cost of any incidental work and equipment which may not be called for on the Drawings and Specifications, but which are necessary for construction and proper operation of hydrotherapy pools as required by the governing laws and health and building codes.

PART 2 PRODUCTS

2.1 MANUFACTURER

Hydrotherapy pool and equipment shall be as manufactured by one of the following, or approved equal:

1. Ferno Custom Therapy Pools; Wilmington, OH 45177.
2. Twirl Jet Space, Inc., Riverside, CA 92502, or equal approved by the Contracting Officer.

The manufacturer shall have been regularly engaged in the manufacture and installation of hydrotherapy pools of the type specified herein and shall be able to demonstrate at least three installations of the type specified made by him which have provided satisfactory operation for a period of at least two years prior to the date of receipt of general bids for this Project.

Also, the manufacturer shall be able to demonstrate that he has provided satisfactory maintenance service for hydrotherapy pools and that he has maintained an adequate stock of parts for replacement and emergency purposes.

2.2 HYDROTHERAPY POOL TANK

Provide wood framed hydrotherapy pool tank as required below.

Tank frame: Shall be 3 inch by 9 inch nominal laminated Douglas Fir complying with the requirements of ANSI A190.1992 Frame shall be clear finished with not less than four (4) coats of epoxy based finish with a non-slip texture. Frame shall be composed of vertical and horizontal

members. Horizontal members shall be "on the flat". Frame joints shall be mortise and tenon and half lap construction. No butt joints shall be permitted. Corner joints shall be half lapped, glued and bolted with not less than four 1/2 inch minimum diameter stainless steel carriage bolts and acorn nuts with washers. All edges and corners shall be rounded to 0.25 inch radius minimum.

Solid Tank Wall Panels: Shall be 1/2 inch thick water impervious phenolic panels laminated with high pressure decorative laminate (HPDL) on outside face. High pressure decorative laminate shall conform to the requirements of Section 06400 ARCHITECTURAL WOODWORK. High pressure decorative laminate color shall be as required in Section 09915 COLOR SCHEDULE.

Tank Window Panels: Shall be 1/2 inch minimum thickness clear acrylic panels. Provide area 48 inches high by 120 inches long of not more than six (6) abutting window panels at exposed long (120 inch) side of tank.

Tank Floor System: Shall be 1-1/2 inch thick minimum non-absorbent, rigid insulating foam laminated to rigid polypropylene sheet to provide a non-impressionable surface beneath the liner. Floor system shall bear on building cast in place concrete slab system. Floor shall slope to tank drain at 1/8 inch per 12 inch nominal.

Tank Liner: Shall be 100% polyvinyl, 60 mil thick minimum at the floor and 30 mil minimum at the walls, electronically welded to form a water-tight tank liner, form-fit to the walls and floor. Color of liner shall be blue. Depth of water shall be marked above the water line at mid-point of each side of tank. Characters shall be black, 4 inches high, nominal, and permanently bonded to liner.

Tank Plumbing: Provide suction drains, inlets, skimmer and resistance jet built into wall panels. Pool shall have twin suction drains not exceeding a flow of 8 feet per second and return lines not exceeding a flow of 10 feet per second to the re-circulating pump. Suction drains, inlets and skimmer shall be located at long (120 inch) side of tank abutting room partition. Resistance jet shall be located at center of short (96 inch) side of tank abutting room partition. Piping shall conform to the requirements below.

Tank Drain: Provide through-wall tank drain with shut-off valve and up to 24 feet of flexible 1" neoprene (rubber) hose. Actual hose length shall be as directed by the Contracting Officer. Hose shall be jointed to valve with threaded plastic fitting to permit removal and replacement of hose. Provide hose coil hanger on pool frame. Tank drain shall be not more than 1/2 inch above floor of tank at short (96 inch) side of tank abutting room partition. Valve and hose connection shall be accessible at exposed side of pool.

2.3 HYDROTHERAPY POOL EQUIPMENT

Provide all equipment required for proper heating, circulating and automatic chemical treatment of hydrotherapy pool water as required below. Equipment shall be located as indicated, remote from pool. Pool equipment shall provide a one-hour complete water circulation time.

Equipment Package: Provide all required pumps, motors, heaters, in-line thermometers, controls and the like fully assembled and installed together as a "package", pre-wired and pre-plumbed on a galvanized steel base. Include electric panel, time clock, and ground-fault interrupter lighting circuit breaker.

Equipment Package Pad: Provide 4" high cast in place concrete pad for mounting of equipment package conforming to the requirements of Section 03300 CAST-IN-PLACE STRUCTURAL CONCRETE. Pad shall be rectangular, 8 inches larger that maximum package dimensions each way.

Piping: Shall be Schedule 80 PVC minimum conforming to the requirements of Section 13153 SWIMMING POOL PLUMBING, MECHANICAL AND CHEMICAL EQUIPMENT. Provide all piping between tank and equipment package, including, but not limited to, wall inlet, drain, skimmers, vacuum, and jets.

2.4 ACCESSORIES

Provide hydrotherapy pool accessories as required below.

Pool Exterior Stairs: Provide at exposed short (96 inch) side of tank exterior stairs including treads, posts, risers and platform of material and finish to match tank frame. Stairs and platforms shall be 24 inches wide minimum. Provide evenly distributed non-slip strips on treads and platform covering not less than 50% of surface. Provide material and finish matching wood hand rail and guardrail system on sides of stairs and platform.

Pool Interior Stairs: Provide at exposed short (96 inch) side of tank interior stairs including treads, risers, posts and platforms. Treads and risers shall be plastic grating with non-slip surface. Stair sides shall be of 1/2 inch thickness laminated phenolic panels. Panel finish shall match pool solid tank wall panel outside color. Provide stainless steel handrail system at each side of stair and platform.

Chemical Starter Kit: Provide one (1) chemical starter kit for pool. Starter kit shall be used for initial startup, testing and commissioning of hydrotherapy pool systems. Starter kit shall contain all necessary chemicals for initial treatment and balancing of pool water.

Chemical Test Kit: Provide one (1) complete test kit for chlorine, pH, alkalinity, calcium and cyanuric acid.

Vacuum Cleaning System: Provide one (1) vacuum cleaning system for pool. Vacuum cleaning system shall include, but is not limited to; vacuum head with swivel connection for handle and connection for hose; 12 foot long, multi-piece tubular aluminum extension to permit cleaning of pool from one side without entering water; 20 foot corrosion proof, crush resistant hose; vacuum hose connection to equipment system, and corrosion proof wall storage hooks. Vacuum hose connection shall be located at exposed side of tank adjacent to tank drain.

Skimmer Net: Provide one (1) skimmer net with corrosion proof wall storage

hooks. Skimmer net shall have fine corrosion resistant mesh in frame mounted to 10 to 12 foot long tubular aluminum handle and resilient end cap.

Filter Cartridges: Provide two (2) extra filters for each type of filter required by pool equipment.

Hand-Held Thermometer: Provide one (1) hand-held pool water thermometer. Hand-held thermometer shall be waterproof battery operated digital type with 0.25 inch LCD display, temperature range of 14 to 392 degrees Fahrenheit (F), 0.1 degree F resolution, accuracy of 1.8 degrees F, stainless steel stem, and 1.5 volt battery.

Pool Cover: Provide one (1) cover for pool. Cover shall be manufacturer's standard bubble cover.

Signage: Provide two (2) manufacturer's standard wall mounted corrosion proof "NO DIVING" signs. Install signs in locations directed by Contracting Officer.

PART 3 EXECUTION

3.1 INSTALLATION - GENERAL

Installation of hydrotherapy pool and related equipment shall be complete in all respects and in a first class manner, in accordance with the approved shop drawings, the manufacturer's printed specifications and instructions, and the requirements of the laws, rules, regulations, codes, and industry standards specified hereinbefore.

Hydrotherapy pool work shall be complete in all respects with all components properly adjusted, and with all operating mechanisms and controls in proper working order.

3.2 HYDROTHERAPY POOL AND EQUIPMENT

Install hydrotherapy pool and related equipment in strict accordance with manufacturer's printed instructions at the locations indicated on the Drawings.

3.3 FINAL TEST

In addition to the other requirements, tests and remedies herein provided, upon completion of the hydrotherapy pool installation, the pool manufacturer or pool installing firm shall make, in the presence of the Contracting Officer, a test on the equipment, as installed, meeting all requirements of the specifications.

In the event the equipment does not meet all requirements of the Specification, the hydrotherapy pool manufacturer and/or installing firm shall promptly remove from the premises all work condemned by the Contracting Officer as failing to conform to the Contract, and shall promptly replace and re-execute his own work in accordance with the Contract, without expense to Owner, and shall bear all expense of making good all work of other contractors destroyed or damaged by such removal or

replacement.

3.4 TRAINING

After completion of the installation, train User's Representatives on complete aspects of the hydrotherapy pools and their operation, maintenance, and cleaning.

3.5 MAINTENANCE

Contractor shall maintain the Hydrotherapy Pool ready for use until Final Acceptance of the facility.

-- End of Section --

SECTION 13851

FIRE DETECTION AND ALARM SYSTEM, ADDRESSABLE

PART 1 GENERAL

1.1 REFERENCES

The publications listed below form a part of this specification to the extent referenced. The publications are referred to in the text by basic designation only.

INSTITUTE OF ELECTRICAL AND ELECTRONICS ENGINEERS (IEEE)

IEEE C62.41	(1991) Surge Voltages in Low-Voltage AC Power Circuits

NATIONAL FIRE PROTECTION ASSOCIATION (NFPA)

NFPA 70	(1999) National Electrical Code
NFPA 72	(1999) National Fire Alarm Code
NFPA 90A	(1999) Installation of Air Conditioning and Ventilating Systems

UNDERWRITERS LABORATORIES (UL)

UL 6	(1997) Rigid Metal Conduit
UL 38	(1994; Rev Jan 1994) Manually Actuated Signaling Boxes for Use with Fire-Protective Signaling Systems
UL 228	(1997) Door Closers-Holders, With or Without Integral Smoke Detectors
UL 268	(1996) Smoke Detectors for Fire Protective Signaling Systems
UL 268A	(1993; Rev thru May 1997) Smoke Detectors for Duct Applications
UL 464	(1996) Audible Signal Appliances
UL 521	(1993; Rev Oct 1994) Heat Detectors for Fire Protective Signaling Systems
UL 797	(1993; Rev thru Mar 1997) Electrical Metallic Tubing

UL 1242	(1996) Intermediate Metal Conduit
UL 1971	(1995; Rev thru May 1997) Signaling Devices for the Hearing Impaired

1.2 GENERAL REQUIREMENTS

1.2.1 Standard Products

Material and equipment shall be the standard products of a manufacturer regularly engaged in the manufacture of the products for at least 2 years prior to bid opening. Equipment shall be supported by a service organization that can provide service within 24 hours of notification.

Provide a phone number for technical support. There shall be a trained factory representative available 24 hours a day, 365 days per year.

1.2.2 Nameplates

Major components of equipment shall have the manufacturer's name, address, type or style, voltage and current rating, and catalog number on a noncorrosive and nonheat-sensitive plate which is securely attached to the equipment.

1.2.3 Keys and Locks

Locks shall be keyed alike. Four keys for the system shall be provided. System shall be keyed with a C-415.A key.

1.2.4 Tags

Tags with stamped identification number shall be furnished for keys and locks.

1.2.5 Verification of Dimensions

After becoming familiar with details of the work, the Contractor shall verify dimensions in the field and shall advise the Contracting Officer of any discrepancy before performing the work.

1.2.6 Compliance

The fire detection and alarm system and the central reporting system shall be configured in accordance with NFPA 72. The equipment furnished shall be compatible and be UL listed, FM approved, or approved or listed by a nationally recognized testing laboratory in accordance with the applicable NFPA standards.

1.2.7 Qualifications

1.2.7.1 Engineer and Technician

a. Registered Professional Engineer with verification of experience and at least 4 years of current experience in the design of the

fire protection and detection systems.

b. National Institute for Certification in Engineering Technologies (NICET) qualifications as an engineering technician in fire alarm systems program with verification of experience and current NICET certificate.

c. The Registered Professional Engineer may perform all required items under this specification. The NICET Fire Alarm Technician shall perform only the items allowed by the specific category of certification held.

d. The technician shall be certified by Monaco Industries, and approved by West Point fire department to program all necessary information for system operation into the Monaco D-700 Radio Alarm system.

1.2.7.2 Installer

The installing Contractor shall provide the following: NICET Fire Alarm Technicians to perform the installation of the system. A NICET Level 3 Fire Alarm Technician shall supervise the installation of the fire alarm system. NICET Level 2 or higher Fire Alarm Technician shall install and terminate fire alarm devices, cabinets and panels. An electrician or NICET Level 1 Fire Alarm Technician shall install conduit for the fire alarm system. The Fire Alarm technicians installing the equipment shall be factory trained in the installation, adjustment, testing, and operation of the equipment specified herein and on the drawings.

1.2.7.3 Contractor Provided Design Services

This Project includes designs and modifications of fire detection, fire alarm, and fire suppression systems. The services and review of a qualified, Contractor provided, fire protection engineer are required. For the purposes of meeting this requirement, a qualified fire protection engineer is defined as an individual meeting one of the following conditions:

a. An engineer having a Bachelor of Science or Masters of Science Degree in Fire Protection Engineering from an accredited university engineering program, plus a minimum of 2 years' work experience in fire protection engineering.

b. A registered professional engineer (P.E.) in fire protection engineering.

c. A registered PE in a related engineering discipline and member grade status in the National Society of Fire Protection Engineers.

d. An engineer with a minimum of 10 years' experience in fire protection engineering and member grade status in the National Society of Fire Protection Engineers.

1.3 SYSTEM DESIGN

1.3.1 Interface With Existing Fire Alarm Equipment

The equipment specified herein shall operate as an extension to an existing configuration. The new equipment shall be connected to an existing control panel in the existing part of the building. Existing control equipment, audio amplifiers, strobe circuits, batteries, battery charger shall be expanded, modified, or supplemented as necessary to extend the existing control and equipment functions to the new points or zones. New components shall be capable of merging with the existing configuration without degrading the performance of either system. The scope of the acceptance tests of paragraph Testing shall include aspects of operation that involve combined use of both new and existing portions of the final configuration. Existing system is a Simplex Model 4100.

1.3.2 Interface With other Equipment

Interfacing components shall be furnished as required to connect to subsystems or devices which interact with the fire alarm system, such as supervisory or alarm contacts in suppression systems, operating interfaces for smoke control systems, door releases, etc.

1.3.3 Operation

A. The FACP (Fire Alarm Control Panel) shall have an internal integrated FM radio transceiver with a 4 watt minimum output. The FACP shall be in constant radio communication with the Monaco D-700 system at the fire station. The FACP shall report alarms with specific detailed locations to the D-700 on 60 different ZID (Zone OIdentification) cards. The FACP shall automatically report individual zone alarms, troubles, restorations and all panel status changes to the D-700. All trouble alarms shall be resounded to the D-700 at daily intervals. Alarm transmissions shall have transmitting priority over all other status changes. The system shall have a capacity of 792 analog addressable smoke or heat sensors, and 792 adressable monito or control modules. All communication between the FACP and the central station shall use an FM radio frequency of 407.525 MHz.

B. System supervision shall be such that the ability of all addressable alarm initiating devices and addressable modules to communicate with the central equipment is constantly monitored, and such failure shall result in an audible signal at the Fire Command Station (FCS) and outlying annunciator(s) and a visual annunciation identifying the faulted device or module.

C. The system shall utilize a cathode ray tube (CRT) for the display of all required alarm and equipment status information, and an associated keyboard to permit manual access to the system. For fire department use, selector switch and pilot light modules shall also be included at the Fire Command Station for status and manual access to fans and dampers. A liquid crystal display (LCD) or electro-luminescent display capable of displaying at least 20 lines, with 80 characters per line, will be considered acceptable as an alternate to the CRT. System response time shall be such that alarm indications are displayed within 10 seconds of occurrence. No portion of the "executive" program shall be stored on magnetic media. It

shall be entered into the system by means for "firmware."

D. Smoke detection devices (variously identified herein as "smoke detectors," "smoke sensors" and "smoke sensor/detectors") shall be understood to be of the analog addressable smoke sensor type, for which the decision to initiate an alarm in response to the presence of smoke is software-driven from the fire protective alarm system central equipment. Provisions shall be incorporated at the central equipment to manually test and/or adjust the sensitivity of each smoke detector individually by means of a keyboard or keypad without requiring any replacement of equipment and/or "burning in" of firmware, and to print out a record thereof. The system shall also incorporate "alarm verification" features enabling a time-delayed re-check of any smoke detection signal prior to acknowledging a smoke alarm condition and acting thereon.

E. Circuitry for the system shall comply with the following:

1. Circuits shall be of the following types:

(a) Signalling line circuits (SLC's) shall be utilized for the transmission of multiple signals from outlying addressable initiating devices, addressable control modules and addressable monitoring modules.

(b) "Trunk" signalling line circuits are SLC's originating directly from the system head-end equipment.

(c) "Branch" signalling line circuits are SLC's which are tapped off the "trunk" SLC's. Such circuits shall originate at outlying system equipment control cabinets, and are intended for the direct connection of outlying addressable initiating devices and/or modules.

(d) Initiating device circuits (IDC's) shall be utilized for the connection of non-addressable devices (such as sprinkler water flow switches) to their associated addressable modules.

(e) Notification appliance circuits, hereinafter referred to as indicating appliance circuits (IAC's) shall be utilized for the connection of outlying alarm indicating devices as follows:

(f) "Audible" IAC's are intended for the connection of loudspeakers.

(g) "Visual" IAC's are intended for the connection of strobes.

2. Trunk" SLC's shall comply with the following:

(a) They shall be NFPA 72, Style 7 (Modified) incorporating isolators to limit the loss of signal transmission in the presence of wiring faults as describe hereinafter.

(b) They shall originate at the system head-end equipment, and shall each consist of a Class "A" loop, the sending portion of

which shall feed through outlying equipment control cabinets in which "branch" SLC's are tapped from the loop. The return portion of the loop shall be run directly - without intervening connections - back to the head-end equipment for termination.

(c) The loop conductors shall be run in raceways (as specified hereinafter) throughout. The "sending" portion of the loops shall be physically separated from the "return" by two-hour rated construction or by a horizontal distance of not less than 50 feet.

(d) Within each outlying equipment control cabinet, and at the "sending" and "return" connections at the system head-end equipment, each loop shall incorporate isolators to sectionalize the loops. Two isolators per loop shall be provided in each outlying equipment control cabinet. They shall be so arranged that the wiring within the cabinet and the outgoing branch circuits can be completely isolated from upstream or downstream faults on the trunk loops.

(e) The trunk SLC's - in conjunction with their associated isolators and head end equipment - shall function so as to provide bi-directional signal transmission enabling receipt of alarms and signals at the fire command station (FCS), and activation of addressable control modules from the FCS, in the event of a single open, a single ground, a wire-to-wire short or an open and a ground anywhere on the circuit. The only loss of transmission shall be for devices and/or modules connected to that portion of the loop (between isolators within the ECC) on which the wiring fault has occurred. Wiring faults on the loops, shall result in trouble signals at the FCS which identifies the location of the faults.

3. "Branch" SLC's shall comply with the following:

(a) They shall be NFPA72, Style 6, arranged to limit the loss of signal transmission as described hereinafter.

(b) They shall originate at outlying system equipment control cabinets (ECC's), and shall each consist of a Class "A" loop which is tapped from - and returns to - a "trunk" SLC, together with any transponders or other electronic components required to properly interface "trunk" and "branch" SLC's. Sending and return conductors shall be separated by a distance of not less than 20 feet except where they come together at ECC's, devices or modules.

(c) Where required for the accommodation of auxiliary control relays associated with outlying addressable control modules as described in later subsections, incorporate additional supervised power supply conductors originating at the ECC's.

(d) Include multiple "branch" SLC's within outlying system equipment control cabinets (ECC's) as required to insure that no more than 50 alarm initiating devices and/or addressable monitoring modules associated with non-addressable alarm or

supervisory initiating devices are connected to a single "branch" SLC. Each "branch" SLC shall be tapped from a "trunk" SLC by means of isolators which will disconnect it from the "trunk" SLC in the event of a wire-to-wire short (and will initiate a trouble signal identifying the fault at the FCS) so as to allow the remaining "branch" SLC's originating within the same ECC to function normally.

(e) The loop conductors shall be run in raceways (as specified hereinafter) throughout.

(f) The "branch" SLC's shall function in conjunction with upstream circuitry and head-end equipment so as to provide bi-directional signal transmission enabling receipt of alarms and monitoring signals at the FCS, and activation of addressable control modules from the FCS, in the event of a single open, a single ground or an open and a ground on the circuit. Wiring faults on the circuits shall result in trouble signals at the FCS, identifying the faulted circuit.

4. Initiating device circuits (IDC's) shall comply with the following:

(a) They shall be NFPA72, Style B, so arranged in conjunction with field installed end-of-line devices as to be operational in the event of a single ground, and transmit trouble signals to the FCS via their associated monitoring modules (AMM's) in the event of an open or ground on the circuit. Such signals shall identify the AMM.

(b) Conductors for IDC's shall be installed in accordance with the requirements specified above for "branch" SLC's.

5. Indicating appliance circuits (IAC's) shall comply with the following:

(a) They shall be NFPA 72 Style Z, Style Y circuits originating at, and returning to, the associated equipment control cabinets, and so arranged as to permit audible or visual signal operation in the event of a single open or a single ground. Wiring faults shall cause receipt of trouble signals at the FCS identifying the faulted circuit.

(b) Conductors for IDC's shall be installed in accordance with the requirements specified above for "branch" SLC's.

6. Alternate circuitry and equipment arrangements which provide equal reliability (i.e., the ability to transmit and receive signals in the event of wiring faults) will be considered acceptable subject to proof of the reliability equivalence. In particular, systems employing dual communications buses will be considered if automatic transfer between buses without the loss of existing information - occurs in the event of a wiring fault or equipment failure associated with one bus.

7. Risers or trunk circuits supplying multiple floors shall be so arranged as to protect against the inability to initiate evacuation signals on more than one floor (or zone) in the event of fire on a single floor. To accomplish this, sending and return portions of loops or dual communications buses shall be so located as to be separated by 2-hour rated construction or by a horizontal distance of not less than 50 feet.

8. Note that the use of "T-taps" or other such wiring techniques that limit the ability of addressable devices, addressable modules, loudspeaker, strobes or other devices to function normally in the event of wiring faults as described hereinbefore will not be allowed.

F. Outlying system equipment control cabinets (also referred to as equipment control cabinets or ECC's) shall be distributed throughout the project and shall incorporate all required circuit isolators, transponders, indicating appliance addressable control and monitoring modules, power supplies, terminal strips and other equipment and wiring as required to provide all specified system features and functions. ECC's shall be provided on the basis of one ECC per floor and per Building Segment.

G. ECC's shall not be located in electric closets. They shall be located in suitable non-finished spaces as approved by the Contracting Officer. ECC's shall incorporate NEMA 1 enclosures, hinged lockable doors, electric supervision against unauthorized access and the removal of any components, and shall each have an attached engraved nameplate identifying the cabinet. If (as described hereinafter) distributed amplification for the fire evacuation public address system is optionally provided in lieu of the specified central amplification system, all required equipment shall be incorporated as part of the outlying ECC's - either in the same cabinets - or in separate supervised cabinets mounted adjacent thereto.

H. Outlying addressable module boxes (or cabinets) shall be distributed throughout the project and shall contain addressable monitoring and/or control modules as follows:

1. An addressable monitoring module ("indicating device" type, i.e., AMM/ID) shall be provided adjacent to each sprinkler or standpipe waterflow device and each non-addressable alarm or supervisory initiating device.

2. An addressable monitoring module ("status" type, i.e., AMM/S) shall be provided adjacent to each fan motor starter (or other device controller) for equipment whose operational status must be monitored by the Fire Alarm System. Where two status indications are to be monitored for equipment items (such as dampers), two such AMM/S units shall be provided.

3. An addressable control module (ACM) shall be provided adjacent to each fan motor starter (or other device controller) for equipment whose operation must be automatically and/or manually controlled by the fire alarm system. Where two independent control functions are required for a piece of equipment (such as for fan motors and

smoke purge dampers), two such ACM's shall be provided for the equipment.

4. Auxiliary relays shall be provided to comply with requirements specified hereinafter.

I. System supervision of outlying circuitry and equipment shall incorporate the following:

1. Supervision against circuitry wiring faults as described hereinbefore.

2. Supervision against unauthorized access and/or removal of components at ECC's as described hereinbefore.

3. Supervision of addressable alarm initiating devices, addressable control or monitoring modules, and other outlying devices against removal, or - as described hereinbefore - against malfunction.

4. Supervision of power supplies. Failure of any system power supply shall cause a trouble signal at the FCS identifying the affected power supply.

5. Supervision of smoke detector/sensor device sensitivity so as to provide a "dirty head" notification at the FCS identifying the affected device.

6. Supervision against loss of voltage at any system component requiring power for its proper operation. Such failure shall cause a trouble signal at the FCS identifying the location of the affected device(s).

7. Supervision against "off-normal" manually initiated actions at the FCS. Any such action shall cause an identifying trouble signal at the FCS.

8. Loss of AC Power in FACP shall be automatically reported to Central Station.

J. Power supplies serving visual warning signals shall be of the regulated type having an output of 28 VDC (adjustable to 30 VDC) ±3%.

K. The system shall automatically initiate the transmission of alarm, supervisory and trouble signals, as well as all trouble restorations, over the station radio fire reporting system. Alarms shall be reported on up to 60 individual zones. The system shall also incorporate operating features as follows:

INITIATIO	RESULTING OPERATION
Operation of manual fire alarm stations	Sound evacuation tone signal through loudspeaker stations, and flash visual fire warning signals.

	Recorded announcements shall follow tone signals.
	Sound audible signal and display "manual station" and zone identification at fire command station and outlying annunciators.
	Operate relay at fire command station to accommodate transmission of a radio signal to Fire Department D-700 System.
Triggering of duct smoke detector; or of area smoke or heat detector	Initiate an automatic alarm zone verification sequence. Upon verification,sound evacuation tone signals and recorded announcements through loudspeaker stations, and flash visual fire warning signals as noted for manual stations. (Omit alarm veri-fication sequence for heat detectors.)
	Sound audible signal and display "duct smoke" "area smoke" "elevator lobby smoke" or "area heat" detector and zone identification at fire command station and outlying annunciators.
	Operate relay at fire command station to accommodate transmission of radio signal to Fire Department D-700 System.
	Operate outlying addressable modules to accommodate transmission of signals to dampers, fans, elevators, and other equipment, as scheduled and/or as specified hereinafter. Display status of affected equipment at Fire Command Station and outlying annunciators.
Triggering of waterflow switch in sprinkler system	Sound audible signal and display "waterflow" and zone

	identification at fire command station and outlying annunciators. Sound evacuation tone signals, followed by recorded announcement, through loudspeakers, and flash visual fire warning signals, as noted above for manual stations. Operate relay at fire command station to accommodate transmission of a radio signal to the Fire Department D-700 System. Operate outlying addressable modules to accommodate transmission of signals to elevators, fans, dampers and other equipment, as scheduled elsewhere or as described hereinafter. Display status of affected equipment at Fire Command Station and outlying annunciators.
Operation of tamper switch on manual valve of sprinkler or fire standpipe system	Sound audible signal and display "manual valve tamper" and location identification at fire command station and outlying annunciators. Operate relay at fire command station to accommodate transmission of a "supervisory" radio signal to Fire Department D-700 System.
Operation of "master alarm" Switch at Fire Command Station	Sound evacuation tone on all speakers in building and flash all strobes.
Operation of "power failure" or "pump running" alarm contacts in fire pump starter	Sound audible signal and display "fire pump" identification at fire command station and outlying annunciators. Operate relay at fire

	command station to accommodate transmission of a "supervisory" radio signal to fire department D-700 System.
Operation of individual motorized equipment "override start or stop" control switch at the fire command station.	Initiate start or stop operation and display status of selected motor and report status at the fire command station.
Operation of alarm contact on standalone system	Same as for waterflow except. display "subsystem" type and zone (location).
Operation of a supervisory contact on a standalone system	Same as tamper switch, except display "supervisory" and zone (sub-system).
Operation of "outside assistance" key switch at the fire command station	Operate relay at fire command station to accommodate transmission of radio signal to fire dept. D-700 System
Operation of "fire drill" key switch at the fire	Void operation of "central station" fire department command station relays.

L. Reset of all alarm initiating device circuits, alarm notification circuits, and equipment control relays shall be accomplished from the fire command station. Manual fire alarm stations shall require local reset before central reset from the fire command station is possible. In no case shall the above alarm reset procedure cause the re-setting of equipment control relays (for fans, dampers, etc.). Such devices shall require separate reset from the fire command station.

M. It shall be possible to disconnect any floor, or any device or combination of devices on any floor, from the system, even when device is in alarm or trouble, to allow for maintenance, repairs, or the addition of system devices and wiring without disabling any other floor. Such disconnection shall cause a visual "disabled" annunciation at the fire command station identifying the floor and/or devices.

N. Each manual station, smoke or heat detector, sprinkler/standpipe alarm or supervisory actuating device, and sub-system alarm or supervisory initiating device shall constitute a separate zone for reporting to the fire command station. For display at the fire command station (FCS) and at outlying annunciator(s), each reporting zone (i.e., device) shall be individually identified, except that multiple smoke detectors (or multiple heat detectors) located within a single space may be identified by a common display. It shall be possible to separately identify and display the address of the individual detector(s) in alarm within any such space by

means of an appropriate command at the FCS keyboard or keypad.

O. Reporting of all required alarms and supervisory signals to the Fire Command Station (FCS) from initiating devices of the non-addressable type, including (but not limited to) sprinkler and standpipe waterflow and supervisory devices, manual fire alarm stations, sub-system (e.g., pre-action sprinkler, etc.) alarm and supervisory contacts, and the like shall be accomplished in conjunction with addressable monitoring modules of the initiating device type (i.e., AMM/ID). AMM/ID's shall be of a type intended for connection of NFPA 72, Style 6 "branch" signalling line circuits (SLC) as described hereinbefore and shall be connected to the appropriate SLC on the floor on which they are located. Except where incorporated as part of manual fire alarm stations (or in the outlet boxes on which they are mounted), AMM/ID's shall be mounted adjacent to the associated initiating devices in outlying addressable monitor module boxes and shall be complete with engraved red nameplate. Each AMM/ID shall be interconnected to its associated initiating device by means of an initiating device circuit (IDC) as described hereinbefore. Provide an end-of-line resistor at each initiating device so as to permit supervision of the interconnecting circuitry. Terminals shall be incorporated in each addressable module box for the accommodation of all entering conductors.

P. Control (automatic and/or manual) and status reporting (monitoring) of equipment via the fire protective alarm system as specified hereinafter shall be accomplished by means of addressable control modules (ACM's) and addressable monitoring modules of the status reporting type (AMM/S's) located within 3 ft.-0 in. of the controlled equipment in outlying addressable monitor boxes similar to those specified above for the AMM/ID's. Addressable modules (ACM's and AMM/S's) shall be provided in accordance with the following:

1. ACM's and AMM/S's shall be of a type intended for connection to NFPA 72, Style 6 inch branch signalling circuits (SLC's) as described hereinbefore, and shall be connected to the appropriate SLC serving the floor on which they are located.

2. Each ACM shall provide (2) SPDT contacts suitable for use at voltages up to 250 VAC and capable of interrupting 10 amperes inductive, and shall derive its operating and supervisory current at 24VDC from the SLC. If necessary, these contact ratings shall be accommodated by means of auxiliary control relays mounted within or adjacent to the same addressable monitor boxes as the ACM's, and deriving their operating power from the associated ACM's, or directly from the associated ECC via separate supervised power supply conductors.

3. Each AMM/S shall function so as to provide a readily identifiable status indication at the FCS in response to a 120 or 208 VAC signal from the associated controlled equipment. Incorporate an auxiliary status (monitoring) relay for each AMM/S to convert a 120 or 208 VAC AC signal to a "dry" contact if the AMM/S requires a "dry" contact for proper status signal initiation. Auxiliary status relays, if required, shall be mounted in the same outlying addressable module boxes as their associated AMM/S's.

4. At locations (such as motor control centers) where multiple equipment controllers are installed, the addressable modules (and any associated auxiliary relays) may be grouped in common addressable module boxes.

5. Module address shall be clearly labeled on exterior of device.

Q. System operation shall be such as to provide automatic and/or manual control of fans, and of dampers and other equipment in response to alarm initiation, as well as central status reporting. Include provisions at the FCS in outlying system equipment control cabinets, and in outlying addressable module boxes (or cabinets) - each located within 3 ft.-0 in. of the associated motor starter, smoke purge damper control device or other equipment control device, control circuitry extensions (i.e., final connections) from the addressable module boxes to the controlled equipment and connections, all as required to achieve this control.

R. Outlying addressable module boxes, each complete as indicated, shall be provided for equipment requiring automatic or manual control by the FPA system on the basis of the following:-

1. One box including two ACM's ("stop", start") and one AMM/S ("running") for each fan.

2. One box including one ACM ("purge") and two AMM/S's ("open"/"closed") for each smoke purge damper system. Refer to HVAC floor plans and risers for quantity of smoke purge damper systems (i.e., for each fan system which includes direct outside exhaust provisions).

3. One addressable module box, including two ACM's ("recall", "recall to alternate floor") and one AMM/S ("elevators recalled") for each bank of elevators. "Alternate elevator recall" shall be initiated only by detector operation on the terminal flow. Provide two additional ACM's ("de-energize/re-energize elevator power) for each elevator. Also, include one AMM/S per elevator ("power de-energized").

4. One addressable module box, including one ACM, for the fire/smoke door release system.

5. Additional addressable module boxes as necessary to comply with the scheduled control of equipment in response to system alarm actuating devices.

S. Provide final connections (i.e., control circuit extensions) from each addressable module boxes to the equipment "controller" it services, utilizing THWN wires run in conduit in accordance with the following:-

1. From each box supplying a fan motor, provide 5 #14 THWN control circuit run in conduit to the motor starter and connect as indicated on the drawings.

2. From each box supplying a smoke purge damper system, provide a 5 #14 circuitry run in conduit to damper control device (EP switch or electric damper motor), and damper end switches. Provide for each a 120 volt supply from an emergency panel. Connect as indicated on the drawings. For systems with additional upstream or downstream operable dampers through which smoke is exhausted, extend wiring to the associated damper control devices, and end switches, and connect so that all dampers operate as a group, and all dampers must be fully open or closed to get status indications. Provide a 2 #14 in conduit circuitry run to an interface control device (relay or other) for each damper which also requires operation by the automatic temperature control system. Device will be provided within 10 feet of the damper as part of the automatic temperature control work. Connect as directed.

3. From each box supplying elevators, provide a 6 #14 run in conduit to the elevator controller, and connect so that elevators are recalled to the terminal floor - or alternate floor - in response to operation of waterflow switch, elevator lobby detector, or elevator room smoke or heat detector, and an "elevators recalled" status signal is activated at the FPA system central equipment. Provide an additional 6#14 (in conduit) run from the box to an upstream device, arranged so as to provide a time delayed (adjustable 0 - 180 seconds) shutdown of the power to the elevator power feeder, to permit a remote manual restoration of power from the FCS, and a "status" indication at the FCS.

T. System operation shall include manual over-ride control from -- and status reporting at -- the fire command station for each item of "controlled equipment" (such as fans, dampers, fire doors, elevators, etc.) which is to be automatically controlled in response to the operation of system alarm actuation devices as scheduled elsewhere, and for each smoke exhaust (purge) damper system and smoke purge fan. Re-start of fans shut down by an alarm shall be possible without clearing the alarm condition, (so as to assist in the smoke control) but only if a Fire Department key has been inserted in the Fire Command Station. Manual control of elevators will not be required, however, status reporting will be required. Additional "manual only" control of certain fans and dampers (plus status reporting) shall be provided if specified herein or scheduled on the drawings. To accomplish the aforementioned status reporting and manual control, include all required switching and status reporting devices at the Fire Command Station, and other necessary equipment at outlying equipment control cabinets and addressable module boxes, and all associated wiring, interwiring and final connections.

U. The project contains a smoke exhaust (purge) system, requiring automatic purge initiation. Manual "purge" control will be required and shall be such as to require resetting at the fire command station for each attempt to "purge". Any re-attempts to "purge" subsequent to failure of dampers to operate shall require manual resetting, as shall the the restoration of the fire alarm system to "normal" after an "alarm" condition. To accomplish smoke purge, include:

1. Equipment and wiring at the fire command station to automatically or manually start the smoke exhaust system motors to indicate system status as well. Where multiple fans are required for purge of a single floor or zone they shall be controlled as group.

2. Addressable modules at outlying system equipment central cabinets and addressable module boxes and interconnecting circuitry and control circuit extensions, as required to accomplish the aforementioned operation of motors and dampers in conjunction with smoke purge, as described hereinbefore.

V. Control of smoke exhaust system dampers has been specified hereinbefore. For the purpose of quantifying the systems, it shall be understood that a separate system is required for:-

1. Each fan system including recirculating air systems, which includes provisions for exhaust directly to the outside.

W. Pressurization of selected areas is required as part of an overall "smoke control plan," the aforementioned sequence of operations, relay requirements and wiring requirements shall be modified as follows:

1. Equipment and wiring at the fire command station to automatically or manually start the smoke make-up air system motors to indicate system status as well. Where multiple fans are required for purge of a zone they shall be controlled as a group. Where the smoke make-up airshafts are normally used for other purposes, the starting of the smoke make-up air fan system motors shall be preceded by the automatic shutdown of all other fans served by the shaft. Include equipment and wiring at the fire command station to accomplish this.

X. At the fire command station, include devices to provide status reporting of the emergency generator ("running," "off") and each automatic transfer switch "normal," "emergency") plus manual control thereof. In addition, include an (8) wire control circuit extension from the fire command station to the emergency generator and each transfer switch and connect as required for status reporting and manual control. Include auxiliary relays if required.

Y. At the fire command station, include devices to provide time delayed (adjustable 0 180 seconds) automatic "de-energize control" of each elevator power feeder in response to EMR or elevator shaft heat detector operation, plus status indication and manual re-energize control therefrom.

Z. Provide all system equipment and circuitry as required to provide supervisory indications at the fire command station in response to operation of fire suppression equipment contacts as follows:

1. The fire pump.

   (a) "Pump running".
   (b) "Failure of power".

2. Refer to sprinkler and/or plumbing drawings for location of fire pump.

AA. The existing "Simplex 4100" fire command station (i.e., the display and control section of the central equipment which requires operator interface) shall be modified to include all components necessary for the system to function as specified. The system display panel shall be arranged to enable a minimum of four (4) simultaneous alarms to be displayed and include an overflow indicator and alarm advance feature. The display panel shall incorporate a back illuminated flashing fire sign module with 3" high red letters. Components of the central equipment which do not require operator interface shall be mounted in racks or cabinets. If space conditions so require such equipment shall be remotely located within 50' of the fire command station in a nearby, unfinished, ventilated space (as directed by the Contracting Officer). All required interconnections shall be included.

AB. Overall system supervision shall be accomplished by means of the response to continuous interrogating signals transmitted from the central equipment. The signal transmission rate shall be such that an "alarm" or "trouble" signal is processed and displayed within the 10 second maximum response time specified hereinbefore, and that subsequent initiation of automatic actions (fan shutdown, e.g.) is similarly initiated within 10 seconds.

AC. Cathode ray tubes (or LCD displays) and keyboards shall be "user friendly" incorporating the following features:

1. English language display.

2. Visually displayed prompts for access to "help screens," "system status files," etc.

3. Keyboard shall include special function keys whose functions are clearly evident, e.g., "purge," "pressure," "start," "stop," "open," "close," "status," "fans," "damper," "help."

AD. System software shall be such that the use of the aforementioned special function keys enable commands to be carried out with minimum effort.

AE. In lieu of the special function keys and associated software as described above, system software may be of a type which permits direct "English language" keyboard entries (without the need for look-up tables) as required for the manual control of fans and dampers for smoke purge and other smoke control functions.

AF. System display shall be prioritized so as to display alarms, controlled equipment status, supervisory indications and system test reports in a sequence and format as approved by all authorities having jurisdiction. Specifically:

1. Equipment status display shall be derived from addressable monitoring modules controlled by limit switches or auxiliary contacts as indicated elsewhere.

2. Equipment status and/or changes in equipment status shall not be automatically displayed except that changes in status of fans, dampers (etc.) may be automatically displayed if they result from a fire alarm initiation event.

3. Where the status of equipment controlled by alarm initiation is not automatically displayed, the manual steps necessary to provide this display shall appear on the CRT along with the alarms.

AG. Display formats which employ mnemonic codes and/or which depend upon written text material in order to properly operate the system shall not be considered as meeting these specifications.

AH. The provisions for manual control and status reporting required at the Fire Command Station to comply with the specification requirements expressed hereinbefore shall, in addition to the CRT and keyboard control and status features, consist of maintained contact selector switches and pilot lights, assembled complete with engraved nameplates, into a readily accessible panel section of the Fire Command Station. Include all required equipment, devices and circuitry as necessary to interface with the central equipment of the system. Status shall be continuously displayed, and manual control of motors, dampers and other devices shall be possible without resorting to the use of the keyboard and/or keypad associated with the CRT display. Lamp test provisions shall be incorporated for the pilot lights. If this panel section cannot be accommodated within the confines of the enclosure allocated for the Fire Command Station, then it shall be separately wall (or other) mounted at an adjacent location approved by the authorities having jurisdiction, and all required interwiring shall be included.

AI. Include at the Fire Command Station (FCS) a Fire Department approved key switch ("1620" Key) which must be operated in order to permit manual initiation of smoke purge and any other smoke control sequences, including the re-start of equipment shut down by a system alarm prior to the clearing of the alarm condition. This key is in addition to the basic required means of securing the entire FCS against tampering by unauthorized personnel.

AJ. The central equipment and outlying equipment cabinets shall incorporate power supply provisions capable of accommodating strobes (either individually mounted or incorporated integrally with loudspeakers)on the basis of the indicated quantity of strobes, plus 50% spare. Risers shall be sized to accommodate an "all call" arrangement for strobe operation. Emergency power for the strobes shall be provided by means of batteries and chargers located in the outlying equipment cabinets, and sized for 5 minutes of continuous operation after 24 hours of supervision. Batteries shall be of the sealed maintenance free type.

AK. Central equipment, signal transmission facilities and outlying control cabinets shall have capacity to handle spare points (which are in addition to those required for all functions hereinbefore specified and/or indicated in the drawings) in accordance with the following criteria:

1. "Trunk" and "branch" signalling line circuits (SLC's) shall be capable of accommodating:

   (a) Twelve spare alarm or supervisory initiating device points per floor (or per 20,000 square feet - or fraction thereof - per floor, where floor is larger than 20,000 square feet).

   (b) Eight spare equipment control points per floor (or per 20,000 square feet - or fraction thereof - per floor, where floor is larger than 20,000 square feet. Each equipment control point shall be understood to consist of two independent control functions plus two independent monitoring (i.e., "status") functions.

2. System equipment control cabinets shall accommodate trunk and branch signalling circuits adequate for the required active points plus the spare points specified above.

3. The central equipment shall have capacity for the spare points described above, plus an additional capacity equal to 25% of those described above. The central equipment shall contain all equipment and devices necessary to activate these spare points. Any software necessary to support these points shall also be included.

AL. The system shall incorporate a "fail safe" control feature accounting for a lack of response to a fire alarm indication at the fire command station. The feature shall incorporate an "acknowledge" button on the fire command station, which if not depressed (following the appearance of a fire alarm indication) within a preset time period as stipulated by the Fire Department, will cause the evacuation tone signal to be sounded through all loudspeaker stations on the system.

AM. The system shall be equipped with a "hard copy" printer located at the Fire Command Station or at another location as directed by the Contracting Officer. It shall incorporate the following features:-

1. It shall duplicate all alarm supervisory and trouble signals automatically generated by the system or operator action.

2. Changes in the status of fans, dampers and other equipment shall not be printed unless the change was automatically generated by an alarm initiation.

3. Print format shall be of alpha-numeric character which includes the month, day, year and time of occurrence, and the type and location of alarm, supervisory and trouble conditions which exist. Alarm, supervisory and trouble data shall be portrayed in English or mnemonic code which is readily identifiable (as approved by the Contracting Officer).

4. It shall include a carriage width which accepts standard 8-1/2 inch roll or fan fold paper (with tractor feed).

5. It shall operate at a print speed of a minimum of 30 characters per second and have a print density of 10 characters per inch.

AN. `The printer shall be supplied with paper feed features (bails, baskets and the like) and a suitable printer stand.

1.4 TECHNICAL DATA AND COMPUTER SOFTWARE

Technical data and computer software (meaning technical data which relates to computer software) which is specifically identified in this project, and which may be defined/required in other specifications, shall be delivered, strictly in accordance with the CONTRACT CLAUSES, and in accordance with the Contract Data Requirements List, DD Form 1423. Data delivered shall be identified by reference to the particular specification paragraph against which it is furnished. Data to be submitted shall include complete system, equipment, and software descriptions. Descriptions shall show how the equipment will operate as a system to meet the performance requirements of this contract. The data package shall also include the following:

(1) Identification of programmable portions of system equipment and capabilities.

(2) Description of system revision and expansion capabilities and methods of implementation detailing both equipment and software requirements.

(3) Provision of operational software data on all modes of programmable portions of the fire alarm and detection system.

(4) Description of Fire Alarm Control Panel equipment operation.

(5) Description of auxiliary and remote equipment operations.

(6) Library of application software.

(7) Operation and maintenance manuals as specified in SD-19 of the Submittals paragraph.

1.5 SUBMITTALS

Government approval is required for submittals with a "GA" designation; submittals having an "FI0" designation are for information only. The following shall be submitted in accordance with Section 01330 SUBMITTAL PROCEDURES:

SD-01 Data

Storage Batteries; GA.

Substantiating battery calculations for supervisory and alarm power requirements. Ampere-hour requirements for each system component and each panel component, and the battery recharging period shall be included.

Voltage Drop; GA.

Voltage drop calculations for notification appliance circuits to indicate that sufficient voltage is available for proper appliance operation.

Spare Parts; GA.

Spare parts data for each different item of material and equipment specified, not later than 3 months prior to the date of beneficial occupancy. Data shall include a complete list of parts and supplies with the current unit prices and source of supply and a list of the parts recommended by the manufacturer to be replaced after 1 year of service.

Technical Data and Computer Software; GA.

Technical data which relates to computer software.

SD-04 Drawings

Fire Alarm Reporting System; GA.

Detail drawings, prepared and signed by a Registered Professional Engineer or a NICET Level 3 Fire Alarm Technician, consisting of a complete list of equipment and material, including manufacturer's descriptive and technical literature, catalog cuts, and installation instructions. Note that the contract drawings show layouts based on typical detectors. The Contractor shall check the layout based on the actual detectors to be installed and make any necessary revisions in the detail drawings. The detail drawings shall also contain complete wiring and schematic diagrams for the equipment furnished, equipment layout, and any other details required to demonstrate that the system has been coordinated and will properly function as a unit. Detailed point-to-point wiring diagram shall be prepared and signed by a Registered Professional Engineer or a NICET Level 3 Fire Alarm Technician showing points of connection. Diagram shall include connections between system devices, appliances, control panels, supervised devices, and equipment that is activated or controlled by the panel.

SD-06 Instructions

Training; FIO.

Lesson plans, operating instructions, maintenance procedures, and training data, furnished in manual format, for the training courses. The operations training shall familiarize designated government personnel with proper operation of the fire alarm system. The maintenance training course shall provide the designated government personnel adequate knowledge required to diagnose, repair, maintain, and expand functions inherent to the system.

SD-08 Statements

Testing; FIO.

Detailed test procedures, prepared and signed by a Registered Professional Engineer or a NICET Level 3 Fire Alarm Technician, for the fire detection and alarm system 60 days prior to performing system tests.

SD-09 Reports

Testing; FIO.

Test reports, in booklet form, showing field tests performed to prove compliance with the specified performance criteria, upon completion and testing of the installed system. Each test report shall document readings, test results and indicate the final position of controls. The Contractor shall include the NFPA 72 Certificate of Completion and NFPA 72 Inspection and Testing Form, with the appropriate test reports.

SD-13 Certificates

Equipment; FIO.

Certified copies of current approvals or listings issued by an independent test lab if not listed by UL, FM or other nationally recognized testing laboratory, showing compliance with specified NFPA standards.

Licenses and Proprietary Information; GA.

Submit all licenses and all proprietary information that allows the Government personnel to pregram, and maintain the system.

Qualifications; FIO.

Proof of qualifications for required personnel. The installer shall submit proof of experience for the Professional Engineer, fire alarm technician, and the installing company.

SD-19 Operation and Maintenance Manuals

Technical Data and Computer Software; GA.

Six copies of operating manual outlining step-by-step procedures required for system startup, operation, and shutdown. The manual shall include the manufacturer's name, model number, service manual, parts list, and complete description of equipment and their basic operating features. Six copies of maintenance manual listing routine maintenance procedures, possible breakdowns and repairs, and troubleshooting guide. The manuals shall include conduit layout, equipment layout and simplified wiring, and control diagrams of the system as installed. The manuals shall include complete procedures for system revision and expansion, detailing both equipment and software requirements. Original and backup copies of all software delivered for this project shall be provided, on each type of media utilized. Manuals shall be approved prior to training.

1.6 DELIVERY AND STORAGE

Equipment delivered and placed in storage shall be stored with protection from the weather, humidity and temperature variation, dirt, dust, and any other contaminants.

PART 2 PRODUCTS

2.1 STORAGE BATTERIES

Storage batteries that may be required to supplement existing batteries shall be 24 Vdc sealed, lead-calcium type requiring no additional water. The batteries shall have ample capacity, with primary power disconnected, to operate the fire alarm system for a period of 72 hours. Following this period of battery operation, the batteries shall have ample capacity to operate all components of the system, including all alarm signaling devices in the total alarm mode for a minimum period of 15 minutes. Batteries shall be located in a separate battery cabinet. Batteries shall be provided with overcurrent protection in accordance with NFPA 72. Separate battery cabinets shall have a lockable, hinged cover similar to the existing fire alarm panel. The lock shall be keyed the same as the existing fire alarm control panel. Cabinets shall be painted to match the existing fire alarm control panel.

2.2 BATTERY CHARGER

Existing battery charger shall expanded, modified, or supplemented as required. Battery charger shall be completely automatic, 24 Vdc with high/low charging rate, capable of restoring the batteries from full discharge (18 Volts dc) to full charge within 48 hours. A pilot light indicating when batteries are manually placed on a high rate of charge shall be provided as part of the unit assembly, if a high rate switch is provided. Charger shall be located in control panel cabinet or in a separate battery cabinet.

2.3 ADDRESSABLE MANUAL FIRE ALARM STATIONS

Addressable manual fire alarm stations shall conform to the applicable requirements of UL 38. Manual stations shall be connected into signal line circuits. Stations shall be installed on semi-flush mounted outlet boxes. Manual stations shall be mounted at 48 inches. Stations shall be single action type. Stations shall be finished in red, with raised letter operating instructions of contrasting color. Stations requiring the breaking of glass or plastic panels for operation are not acceptable. Stations employing glass rods are not acceptable. The use of a key or wrench shall be required to reset the station. Gravity or mercury switches are not acceptable. Switches and contacts shall be rated for the voltage and current upon which they operate. Addressable pull stations shall be capable of being field programmed, shall latch upon operation and remain latched until manually reset. Stations shall have a separate screw terminal for each conductor. Device address shall be clearly labeled on exterior or device. Six of any key or wrench needed to reset station shall be given to West Point Fire inspector. Surface mounted boxes shall be matched and painted the same color as the fire alarm manual stations.

2.4 FIRE DETECTING DEVICES

Fire detecting devices shall comply with the applicable requirements of NFPA 72, NFPA 90A, UL 268, UL 268A, and UL 521. The detectors shall be provided as indicated. Detector base shall have screw terminals for making

connections. No solder connections will be allowed. Detectors located in concealed locations (above ceiling, raised floors, etc.) shall have a remote visible indicator LED/LCD. Addressable fire detecting devices, except flame detectors, shall be dynamically supervised and uniquely identified in the control panel. All fire alarm initiating devices shall be individually addressable, except where indicated.

2.4.1 Heat Detectors

Heat detectors shall be designed for detection of fire by combination fixed temperature and rate-of-rise principle. Heat detector spacing shall be rated in accordance with UL 521. Detectors located in areas subject to moisture, exterior atmospheric conditions, or hazardous locations as defined by NFPA 70 and as shown on drawings, shall be types approved for such locations. Heat detectors located in attic spaces or similar concealed spaces below the roof shall be intermediate temperature rated.

2.4.1.1 Combination Fixed-Temperature and Rate-of-Rise Detectors

Detectors shall be designed for surface outlet box mounting and supported independently of wiring connections. Contacts shall be self-resetting after response to rate-of-rise principle. Under fixed temperature actuation, the detector shall have a permanent external indication which is readily visible. Detector units located in boiler rooms, showers, or other areas subject to abnormal temperature changes shall operate on fixed temperature principle only. The UL 521 test rating for the fixed temperature portion shall be 135 degrees F. The UL 521 test rating for the Rate-of-Rise detectors shall be rated for 50 by 50 ft.

2.4.2 Smoke Detectors

Smoke detectors shall be designed for detection of abnormal smoke densities. Smoke detectors shall be photoelectric or projected beam type. Detectors shall contain a visible indicator LED/LCD that shows when the unit is in alarm condition. Detectors shall not be adversely affected by vibration or pressure. Detectors shall be the plug-in type in which the detector base contains terminals for making wiring connections. Detectors that are to be installed in concealed (above false ceilings, etc.) locations shall be provided with a remote indicator LED/LCD suitable for mounting in a finished, visible location.

2.4.2.1 Photoelectric Detectors

Detectors shall operate on a light scattering concept using an LED light source. Failure of the LED shall not cause an alarm condition. Detectors shall be factory set for sensitivity and shall require no field adjustments of any kind. Detectors shall have an obscuration rating in accordance with UL 268. Addressable smoke detectors shall be capable of having the sensitivity being remotely adjusted by the control panel.

2.4.2.2 Projected Beam Smoke Detectors

Detectors shall be designed for detection of abnormal smoke densities. Detectors shall consist of separate transmitter and receiver units. The

transmitter unit shall emit an infrared beam to the receiver unit. When the signal at the receiver falls below a preset sensitivity, the detector shall initiate an alarm. The receiver shall contain an LED which is powered upon an alarm condition. Long-term changes to the received signal caused by environmental variations shall be automatically compensated. Detectors shall incorporate features to assure that they are operational; a trouble signal shall be initiated if the beam is obstructed, the limits of the compensation circuit are reached, or the housing cover is removed. Detectors shall have multiple sensitivity settings in order to meet UL listings for the different distances covered by the beam. In the event of beam interference for more than three seconds a trouble alarm shall be transmitted.

2.4.2.3 Duct Detectors

Duct-mounted photoelectric smoke detectors shall be furnished and installed where indicated and in accordance with NFPA 90A. Units shall consist of a smoke detector as specified in paragraph Photoelectric Detectors, mounted in a special housing fitted with duct sampling tubes. Detector circuitry shall be mounted in a metallic enclosure exterior to the duct. Detectors shall have a manual reset. Detectors shall be rated for air velocities that include air flows between 500 and 4000 fpm. Detectors shall be powered from the fire alarm panel. Sampling tubes shall run the full width of the duct. The duct detector package shall conform to the requirements of NFPA 90A, UL 268A, and shall be UL listed for use in air-handling systems. The control functions, operation, reset, and bypass shall be controlled from the fire alarm control panel. Lights to indicate the operation and alarm condition; and the test and reset buttons shall be visible and accessible with the unit installed and the cover in place. Detectors mounted above 6 feet and those mounted below 6 feet that cannot be easily accessed while standing on the floor, shall be provided with a remote detector indicator panel containing test and reset switches. Remote lamps and switches as well as the affected fan units shall be properly identified in etched plastic placards. Detectors shall have auxiliary contacts to provide control, interlock, and shutdown functions specified in Section 15951 DIRECT DIGITAL CONTROL FOR HVAC. The detectors shall be supplied by the fire alarm system manufacturer to ensure complete system compatibility.

2.5 NOTIFICATION APPLIANCES

Audible appliances shall conform to the applicable requirements of UL 464. Devices shall be connected into notification appliance circuits. Devices shall have a separate screw terminal for each conductor. Audible appliances shall generate a unique audible sound from other devices provided in the building and surrounding area. Surface mounted audible appliances shall be painted red. Recessed audible appliances shall be installed with a grill that is painted white.

2.5.1 Alarm Speakers

Speakers shall be surface mounted, with the matching mounting back box recessed suitable for use in an electrically supervised circuit. Speakers shall produce a sound rating of at least 85 dBA at 10 feet. Speakers used

in exterior locations shall be specifically listed or approved for outdoor use and be provided with metal housing and protective grilles.

2.5.2 Visual Notification Appliances

Visual notification appliances shall conform to the applicable requirements of UL 1971 and the contract drawings. Appliances shall have clear high intensity optic lens, xenon flash tubes, and output white light. Strobe flash rate shall be between 1 to 3 flashes per second and a minimum of 75 candela. Strobe shall be semi-flush mounted.

2.5.3 Combination Audible/Visual Notification Appliances

Combination audible/visual notification appliances shall provide the same requirements as individual units except they shall mount as a unit in standard backboxes. Units shall be factory assembled. Any other audible notification appliance employed in the fire alarm systems shall be approved by the Contracting Officer.

2.6 FIRE DETECTION AND ALARM SYSTEM PERIPHERAL EQUIPMENT

2.6.1 Electromagnetic Door Hold-Open Devices

Devices shall be attached to the walls unless otherwise indicated. Devices shall comply with the appropriate requirements of UL 228. Devices shall operate on 24 Volt dc power. Compatible magnetic component shall be attached to the door. Under normal conditions, the magnets shall attract and hold the doors open. When magnets are de-energized, they shall release the doors. Magnets shall have a holding force of 25 pounds. Devices shall be UL or FM approved. Housing for devices shall be brushed aluminum or stainless steel. Operation shall be fail safe with no moving parts. Electromagnetic door hold-open devices shall not be required to be held open during building power failure.

2.6.2 Conduit

Conduit and fittings shall comply with NFPA 70, UL 6, UL 1242, and UL 797, and Specification Section 16415, ELECTRICAL WORK, INTERIOR.

2.6.3 Wiring

Wiring for 120 Vac power shall be No. 12 AWG minimum. The SLC wiring shall be fiber optic or copper cable in accordance with the manufacturers requirements. Wiring for fire alarm dc circuits shall be No. 14 AWG minimum. Voltages shall not be mixed in any junction box, housing, or device, except those containing power supplies and control relays. Wiring shall conform to NFPA 70. System field wiring shall be solid copper and installed in metallic conduit or electrical metallic tubing, except that rigid plastic conduit may be used under slab-on-grade. Conductors shall be color coded. Conductors used for the same functions shall be similarly color coded. Wiring code color shall remain uniform throughout the circuit. Pigtail or T-tap connections to initiating device circuits, supervisory alarm circuits, and notification appliance circuits are prohibited.

2.6.4 Special Tools and Spare Parts

Software, laptop computer connecting cables and all proprietary information necessary for the maintenance testing and reprogramming of the equipment shall be provided to the Contracting Officer. Two spare fuses of each type and size required shall be furnished. Two percent of the total number of each different type of detector, but no less than two each, shall be furnished. Spare fuses shall be mounted in the fire alarm panel.

2.6.5 Public Address

A. The system shall provide for intercom and fire evacuation public address features as follows:-

1. The system shall be of a dual channel type, capable of automatically broadcasting evacuation tones followed by recorded announcements repetitively. No tone signals shall be broadcast in stairwells.

2. Manual "on-off" control from the fire command station of evacuation tone signals, recorded announcements and flashing of strobes through loudspeaker stations on any or all floors.

3. Initiation of voice announcements from the fire command station through loudspeaker stations on any or all floors, and separately through loudspeaker stations in stairwells.

B. The fire evacuation public address equipment in the system shall include the following features and functions:

1. Amplifiers shall be sized to accommodate a quantity of speakers equal to that shown on the drawings, plus an additional bulk quantity of 50 speakers intended for installation at locations as directed throughout the system. Sizing shall be based on an average requirement of 2.0 watts per speaker.

2. Amplifiers shall have a frequency response range of not more than ±1.5 dB from 30 to 10,000 hertz and at rated output, less than 2% distortion over the frequency range of 60 to 15,000 hertz.

3. Failure of a power amplifier shall shut down the amplifier and indicate a trouble condition as described in Reference Standard RS17-3A. Amplifiers shall be arranged in such manner, either by pairing or automatic switchover, to provide redundancy.

4. Tone oscillators, microphone circuits and ancillary equipment shall be paired in a similar fashion to the amplifiers and be provided with either automatic or manual switchover to the redundant system.

5. Where the audio path consists of twisted pair "riser cables," it shall include double the number of required pairs (as determined by the total number of speakers called for). Connections at the

amplifiers shall be arranged to readily allow their "transfer" to future amplifiers as necessary.

C. In lieu of the central amplification system described above, distributed amplification may be provided, however, such equipment shall conform to the redundancy requirements described hereinbefore, and the outlying equipment must derive its power from the central equipment.

2.6.6 Annunciator Equipment

A. At least one outlying annunciator is required for this project. Provide this annunciator at a 24-hour supervised location as directed, or where indicated. The outlying annunciator shall duplicate visually and audibly all "alarm," "trouble" and "supervisory" signals received at the fire command station. The annunciator shall be of the cathode ray tube type or of the LCD type as utilized at the FCS.

2.7 TRANSMITTERS

2.7.1 Radio Alarm Transmitters

Transmitters shall be compatible with proprietary supervising station receiving equipment. Each radio alarm transmitter shall be the manufacturer's recognized commercial product, completely assembled, wired, factory tested, and delivered ready for installation and operation. Transmitters shall be provided in accordance with applicable portions of NFPA 72, NFPA 1221, and 47 CFR 15. Transmitter electronics module shall be contained within the physical housing as an integral, removable assembly. The proprietary supervising station receiving equipment is Monaco D-700 and the transceiver shall be fully compatible with this equipment. The transmitter shall be housed in the same panel as the fire alarm control panel and shall be UL listed. It shall be connected to the same power supply provided for fire alarm control panel.

2.7.1.1 Antenna

The Contractor shall provide omnidirectional, halfwave dipole antennas or as recommended by manufacturer for radio alarm transmitters with a driving point impedance to match transmitter output. The antenna and antenna mounts shall be corrosion resistant and designed to withstand wind velocities of 100 mph. Antennas shall not be mounted to any portion of the building roofing system. Signal strength shall be checked and the antenna placed on the building where signal strength is strongest. The location shall be approved by the Contracting Officer.

PART 3 EXECUTION

3.1 INSTALLATION

All work shall be installed as shown and in accordance with the manufacturer's diagrams and recommendations, unless otherwise specified. Smoke detectors shall not be installed until construction is essentially complete and the building has been thoroughly cleaned.

3.1.1 Wiring

Wiring shall be in conduit. Conduit size for wiring shall be in accordance with NFPA 70. Wiring for the fire alarm system shall not be installed in conduits, junction boxes, or outlet boxes with conductors of any other systems. Not more than two conductors shall be installed under any device screw terminal. The wires under the screw terminal shall be straight when placed under the terminal then clamped in place under the screw terminal. The wires shall be broken and not twisted around the terminal. Circuit conductors entering or leaving any mounting box, outlet box enclosure, or cabinet shall be connected to screw terminals with each terminal and conductor marked in accordance with the wiring diagram. Connections and splices shall be made using screw terminal blocks. The use of wire nut type connectors in the system is prohibited. Wiring within any control equipment shall be readily accessible without removing any component parts. The fire alarm equipment manufacturer's representative shall be present for the connection of wiring to the control panel.

3.1.2 Detectors

Detectors shall be located and installed in accordance with NFPA 72. Detectors shall be connected into initiating device circuits. Detectors shall be at least 12 inches from any part of any lighting fixture. Detectors shall be located at least 3 feet from diffusers of air handling systems. Each detector shall be provided with appropriate mounting hardware as required by its mounting location. Detectors which mount in open space shall be mounted directly to the end of the stubbed down rigid conduit drop. Conduit drops shall be firmly secured to minimize detector sway. Where length of conduit drop from ceiling or wall surface exceeds 3 feet, sway bracing shall be provided. Detectors installed in concealed locations (above ceiling, raised floors, etc.) shall have a remote visible indicator LED/LCD in a finished, visible location.

3.1.3 Notification Appliances

Notification appliances shall be mounted 80 inches above the finished floor or 6 inches below the ceiling, whichever is lower.

3.1.4 Addressable Initiating Device Circuits Module

The initiating device circuits module shall be used to connect supervised conventional initiating devices (water flow switches, water pressure switches, manual fire alarm stations, high/low air pressure switches, and tamper switches). The module shall mount in an electrical box adjacent to or connected to the device it is monitoring and shall be capable of Style B supervised wiring to the initiating device. In order to maintain proper supervision, there shall be no T-taps allowed on style B lines. Addressable initiating device circuits modules shall monitor only one initiating device each. Contacts in suppression systems and other fire protection subsystems shall be connected to the fire alarm system to perform supervisory and alarm functions as specified in NFPA 72, as indicated on the drawings and as specified herein.

3.1.5 Addressable Control Module

Addressable and control modules shall be installed in the outlet box or adjacent to the device they are controlling. If a supplementary suppression releasing panel is provided, then the monitor modules shall he mounted in a common enclosure adjacent to the suppression releasing panel and both this enclosure and the suppression releasing panel shall be in the same room as the releasing devices. All interconnecting wires shall be supervised unless an open circuit or short circuit abnormal condition does not affect the required operation of the fire alarm system. If control modules are used as interfaces to other systems, such as HVAC or elevator control, they shall be within the control panel or immediately adjacent to it. Control modules that control a group of notification appliances shall be adjacent to the first notification appliance in the notification appliance circuits. Control modules that connect to devices shall supervise the notification appliance circuits. Control modules that connect to auxiliary systems or interface with other systems (non-life safety systems) and where not required by NFPA 72, shall not require the secondary circuits to be supervised. Contacts in suppression systems and other fire protection subsystems shall be connected to the fire alarm system to perform required alarm functions as specified in NFPA 72, as indicated on the drawings and as specified herein.

3.2 OVERVOLTAGE AND SURGE PROTECTION

3.2.1 Power Line Surge Protection

All equipment connected to alternating current circuits shall be protected from surges per IEEE C62.41 B3 combination waveform and NFPA 70. Fuses shall not be used for surge protection. The surge protector shall be rated for a maximum let thru voltage of 350 Volts ac (line-to-neutral) and 350 Volt ac (Line-to-ground).

3.3 GROUNDING

Grounding shall be provided by connecting to building ground system.

3.4 TESTING

The Contractor shall notify the Contracting Officer at least 10 days before the preliminary and acceptance tests are to be conducted. The tests shall be performed in accordance with the approved test procedures in the presence of the Contracting Officer. The control panel manufacturer's representative shall be present to supervise tests. The Contractor shall furnish instruments and personnel required for the tests.

3.4.1 Preliminary Tests

Test existing fire alarm system and confirm proper operation prior to commencement of new work. Upon completion of the installation, the system shall be subjected to functional and operational performance tests including tests of each installed initiating and notification appliance, when required. Tests shall include the meggering of system conductors to determine that the system is free from grounded, shorted, or open circuits. The megger test shall be conducted prior to the installation of fire alarm

equipment. If deficiencies are found, corrections shall be made and the system shall be retested to assure that it is functional. After completing the preliminary testing the Contractor shall complete and submit the NFPA 72, Certificate of Completion.

3.4.2 Acceptance Test

Acceptance testing shall not be performed until the Contractor has completed and submitted the Certificate of Completion. Testing shall be in accordance with NFPA 72. The recommended tests in NFPA 72 shall be considered mandatory and shall verify that previous deficiencies have been corrected. The Contractor shall complete and submit the NFPA 72, Inspection and Testing Form. Final acceptance testing of the fire alarm system shall be witnessed and approved by WPFD fire inspectors and DHPW Electric Shop personnel. The test shall include all requirements of NFPA 72 and the following:

a. Test of each function of the control panel.

b. Test of each circuit in both trouble and normal modes.

c. Tests of each alarm initiating devices in both normal and trouble conditions.

d. Tests of each control circuit and device.

e. Tests of each alarm notification appliance.

f. Tests of the battery charger and batteries.

g. Complete operational tests under emergency power supply.

h. Visual inspection of wiring connections.

i. Opening the circuit at each alarm initiating device and notification appliance to test the wiring supervisory feature.

j. Ground fault

k. Short circuit faults

l. Stray voltage

m. Loop resistance

3.5 TRAINING

Training course shall be provided for the operations and maintenance staff. The course shall be conducted in the building where the system is installed or as designated by the Contracting Officer. The training period for systems operation shall consist of 1 training day (8 hours per day) and shall start after the system is functionally completed but prior to final acceptance tests. The training period for systems maintenance shall consist of 2 training days (8 hours per day) and shall start after the

system is functionally completed but prior to final acceptance tests. The instructions shall cover items contained in the operating and maintenance instructions. In addition, training shall be provided on performance of expansions or modifications to the fire detection and alarm system. The training period for system expansions and modifications shall consist of at least 1 training day (8 hours per day) and shall start after the system is functionally completed but prior to final acceptance tests. The training period for maintenance persons shall include one 8 hour day of "hands on" troubleshooting training.

3.6 SOFTWARE

Software of completed fire alarm system shall be completely programmed and tested and turned over to the Contracting Officer after the training sessions have been completed to the satisfaction of the Contracting Officer. Programming software shall be windows based, with the original program on CD ROM and a copy of the completed system program on 3.5 in. diskette, and shall be provided to the Contracting Officer.

-- End of Section --

SECTION 13852

FIRE ALARM REPORTING SYSTEM, RADIO TYPE

PART 1 GENERAL

1.1 REFERENCES

The publications listed below form a part of this specification to the extent referenced. The publications are referred to in the text by basic designation only.

CODE OF FEDERAL REGULATIONS (CFR)

47 CFR 15	Radio Frequency Devices

INSTITUTE OF ELECTRICAL AND ELECTRONICS ENGINEERS (IEEE)

IEEE C62.41	(1991) Surge Voltages in Low-Voltage AC Power Circuits

NATIONAL FIRE PROTECTION ASSOCIATION (NFPA)

NFPA 70	(1996; Errata) National Electrical Code
NFPA 72	(1996; Errata) National Fire Alarm Code

UNDERWRITERS LABORATORIES (UL)

UL 6	(1997) Rigid Metal Conduit
UL 797	(1993; Rev thru Mar 1997) Electrical Metallic Tubing
UL 1242	(1996) Intermediate Metal Conduit

1.2 GENERAL REQUIREMENTS

1.2.1 Standard Products

Material and equipment shall be the standard products of a manufacturer regularly engaged in the manufacture of the products and shall essentially duplicate items that have been in satisfactory use for at least 2 years prior to bid opening. Equipment shall be supported by a service organization that can provide service within 24 hours.

1.2.2 Nameplates

Major components of equipment shall have the manufacturer's name, address, type or style, voltage and current rating, and catalog number on a

noncorrosive and nonheat-sensitive plate which is securely attached to the equipment.

1.2.3 Tags

Tags with stamped identification numbers shall be furnished for keys and locks.

1.2.4 Keys and Locks

Locks shall be keyed alike (C-145A Key).

1.2.5 Verification of Dimensions

The Contractor shall become familiar with all details of the work, verify all dimensions in the field, and shall advise the Contracting Officer of any discrepancy before performing the work.

1.2.6 Compliance

The central reporting system shall comply with NFPA 72. The equipment furnished shall be listed by Underwriters Laboratories, or Factory Mutual Engineering and Research, or be approved or listed by a nationally recognized testing laboratory.

1.3 SUBMITTALS

Government approval is required for submittals with a "G" designation; submittals not having a "G" designation are for information only. When used, a designation following the "G" designation identifies the office that will review the submittal for the Government. The following shall be submitted in accordance with Section 01330 SUBMITTAL PROCEDURES:

SD-01 Data

Battery; GA.

Substantiating battery calculations for supervisory and alarm power requirements. Ampere-hour requirements for each system component, each panel component and the battery recharging period shall be included.

Spare Parts; FIO.

Spare parts data for each different item of material and equipment specified, after approval of detail drawings, and not later than 2 months prior to the date of beneficial occupancy. Data shall include a complete list of parts and supplies with the current unit prices and source of supply and a list of the parts recommended by the manufacturer to be replaced after 1 year of service.

Qualifications; GA.

Qualifications, with verification of experience and license number, of a Registered Professional Engineer with at least 4 years of current

experience in the design of fire protection and detection systems. This engineer must perform the various specification items required by this section to be performed by a Registered Professional Engineer.

SD-04 Drawings

Fire Alarm Reporting System; GA.

Detail drawings, signed by the Registered Professional Engineer, consisting of a complete list of equipment and material, including manufacturer's descriptive and technical literature, catalog cuts, and installation instructions. Note that the contract drawings show layouts based on typical detectors. The contractor shall check the layout based on the actual detectors to be installed and make any necessary revisions in the detail drawings. Detail drawings shall also contain complete wiring and schematic diagrams for the equipment furnished, equipment layout, and any other details required to demonstrate that the system has been coordinated and will properly function as a unit.

Wiring Diagrams; GA.

Detail point-to-point wiring diagram, signed by the Registered Professional Engineer, showing all points of connection. Diagram shall include connections between system devices, appliances, control panels, supervised devices, an all equipment that is activated or controlled by the panel.

SD-06 Instructions

Fire Alarm Reporting System; G.

Six complete copies of operating instructions outlining step-by-step procedures required for system startup, operation, and shutdown. The instructions shall include the manufacturer's name, model number, service manual, parts list, and brief description of all equipment and their basic operating features. Six copies of maintenance instructions listing routine maintenance procedures, possible breakdowns and repairs, and troubleshooting guide. The instructions shall include conduit layout, equipment layout and simplified wiring, and control diagrams of the system as installed. Instructions shall be approved prior to training.

Training; FIO.

Training course for the operation and maintenance staff. The course shall be conducted in the building where the system is installed or as designated by the Contracting Officer. The training period shall consist of 1 training day (8 hours per day) and shall start after the system is functionally completed but prior to final acceptance tests. The instructions shall cover all of the items contained in the operating and maintenance instructions.

SD-08 Statements

Test Procedures; GA.

Detailed test procedures for the fire alarm reporting system 60 days prior to performing system tests. The test procedures shall be signed by the Registered Professional Engineer.

SD-09 Reports

Testing; FIO.

Test reports in booklet form showing all field tests performed to prove compliance with the specified performance criteria, upon completion and testing of the installed system. Each test report shall document all readings, test results and indicate the final position of controls.

SD-13 Certificates

Equipment; FIO.

Certified copies of current applicable approvals or listings issued by UL, FM or other nationally recognized testing laboratory showing compliance with applicable NFPA standards.

1.4 DELIVERY AND STORAGE

All equipment delivered and placed in storage shall be protected from the weather, humidity and temperature variations, dirt, dust, and other contaminants.

1.5 SYSTEM OPERATION

The radio system shall report alarms to the radio fire alarm monitoring base station. The system shall be a completely supervised radio type fire alarm reporting system. The system shall indicate the area of alarm. The radio communication link shall be supervised and operated in accordance with NFPA 72.

1.6 ELECTRICAL SUPERVISION

Electrical supervision shall be provided for all circuits and for all positions of interface panel control switches.

PART 2 PRODUCTS

2.1 RADIO FIRE ALARM TRANSMITTER (TRANSCEIVER)

Radio Fire Alarm Transmitter (Transceiver) shall be compatible with the Radio Fire Alarm Monitoring Base Station. The transmitter shall be all solid state and comply with applicable portions of 47 CFR 15 governing type acceptance. All transmitters of a common configuration shall be interchangeable with the other devices furnished by the manufacturer. Each transmitter and interface device shall be the manufacturer's current commercial product completely assembled, wired, tested at the factory, and delivered ready for installation and operation. Transmitters shall be manufactured by Monaco Enterprises, provided with minimum of 60 zones.

2.1.1 Frequency Allocation

The transmitters shall operate on a frequency of 407.525 MHz to the control system of Monaco, D-700.

2.1.2 Power Requirements

Transmitters shall be powered by a combination of locally available 120 Vac, and sealed nickel-cadium type batteries requiring no additional water. In the event of loss of 120 Vac power, the transmitter shall automatically switch to battery operation. The switchover shall be accomplished with no interruption of protective service, without adversely affecting the battery-powered capabilities, and shall cause the transmission of a trouble message in no less than 5 seconds. Upon restoration of ac power, transfer back to normal ac power supply shall be automatic and the battery shall be recharged. The converter/battery charger shall be installed within the transmitter housing. Power supply transient filtering shall be provided.

2.1.2.1 Battery Power

The battery package shall be capable of supplying all the power requirements for a given transmitter.

2.1.2.2 Battery Duration

Radio fire alarm transmitter standby battery capacity shall provide sufficient power to operate the transmitter in a normal standby status for a minimum of 72 hours and shall be capable of transmitting alarms during that period.

2.1.2.3 Battery Supervision

Each radio fire alarm transmitter shall constantly monitor and supervise its own battery powered supply. A low-battery condition shall be reported when battery voltage falls below 85 percent of the rated voltage.

2.1.3 Functional Requirements

2.1.3.1 Interfacing Indicators and Controls

Transmitters shall incorporate the provisions for auxiliary interconnection to existing interior alarm systems.

2.1.3.2 Generation of Signals

Each transmitter shall be a standard design which allows the immediate transmission of all initiated signals.

2.1.3.3 Power Output

The radio frequency (RF) power output of each transmitter shall be sufficient for reliable alarm reporting. The minimum RF power output shall be 4 watt.

2.1.3.4 Memory

Transmitters shall have memory capability. Multiple, simultaneous alarms shall not result in the loss of any messages. Messages shall be stored until they are transmitted.

2.1.3.5 Transmitter Identity Code

Each transmitter shall transmit a distinct identity code number as part of all signals emanating from the transmitter. The identity code shall allow for no less than a four digit code selection and be transmitted not less than three complete rounds (cycles).

2.1.3.6 Message Designations

Each transmitter shall allow as a minimum no less than 10 distinct and individually identifiable message designations as to the types or causes of transmitter actuation.

a. Master Message: Master messages shall be transmitted upon automatic actuation of the transmitter. The building and zone causing actuation shall be individually identified as part of this transmission. The transmitter shall be capable of identifying and transmitting a minimum of 60 master (zone) messages.

b. Test Message: Test message shall be capable of both manual and automatic actuation. When a transceiver method is employed, it shall provide for automatic interrogation at preselected periods or continuous automatic interrogation in accordance with the governing standard. Additionally, transceiver systems shall provide for selective interrogation at times determined by the user. Testing the automatic test actuation shall occur a minimum of once in each 24 hour period, at an optionally preselected time. Stability of the electronic actuating device shall be plus or minus 1 minute per month within the temperature range stipulated for system operation. Actuation of the "Test" message designation, regardless of initiating means, shall cause no less than 1 complete message to be sent.

c. Tamper Message Designation: The tamper message shall be automatically transmitted when a tamper switch is tripped in the transmitter housing.

d. Trouble Message Designation: Trouble message shall be automatically transmitted in the event of a failure in excess of 1 minute of the main operating power source of the transmitter.

2.1.4 Transmitter Housings

Transmitters shall be housed in the Fire Alarm Control Panel (Refer to Section 13851).

2.1.5 Environmental Operating Requirements

The transmitter shall be designed for reliable outside operation in an ambient temperature range of -22 to 140 degrees F.

2.2 FIRE ALARM SYSTEM PERIPHERAL EQUIPMENT

2.2.1 Conduit

Conduit and fittings shall comply with UL 6, UL 1242, and UL 797.

2.2.2 Power Supply

The operating power for the system shall be single phase taken from the building electric service as specified in paragraph Power Supply for the System. Emergency backup power shall be as provided in the Fire Alarm Control Panel.

2.2.3 Wiring

Wiring shall be in accordance with NFPA 70 and as indicated. Station wiring shall be color coded.

2.2.4 Special Tools and Spare Parts

Special tools necessary for the maintenance of the equipment shall be furnished. One spare set of fuses of each type and size required and 5 spare lamps of each type shall be furnished.

PART 3 EXECUTION

3.1 INSTALLATION

All work shall be installed as shown and in accordance with the manufacturer's recommendations, unless otherwise specified. Necessary interconnections, services, and adjustments required for a complete and operational system shall be provided. Electrical work shall be in accordance with NFPA 70.

3.1.1 Power Supply for the System

A single dedicated branch-circuit connection for supplying power to the fire alarm system shall be provided. The backup power supply shall be automatically energized upon failure of the normal power supply.

3.1.2 Wiring

Wiring for systems shall be installed as indicated on the Drawings. The conductors for the fire alarm system shall not be installed in raceways, junction boxes, or outlet boxes with conductors of lighting and power systems. Raceways shall comply with NFPA 70. Ample gutter space to accommodate necessary wiring shall be provided.

3.2 OVERVOLTAGE AND SURGE PROTECTION

Equipment connected to alternating current circuits shall be protected from

surges per IEEE C62.41 and NFPA 70. Cables and conductors which serve as communications links, except fiber optics, shall have surge protection circuits installed at each end. Fuses shall not be used for surge protection.

3.3 TESTING

The Contractor shall notify the Contracting Officer 30 days before the performance and acceptance tests are to be conducted. The tests shall be performed in the presence of the Contracting Officer under the supervision of the fire alarm system manufacturer's qualified representative. The Contractor shall furnish all instruments and personnel required for the tests.

3.3.1 Performance Testing

Upon completion of the installation, the system shall be subjected to a complete functional and operational performance test by the Contractor. Test shall determine that the system is free from grounded, shorted, or open circuits. When all corrections have been made, the system shall be retested to assure that it is functional. Copies of performance test reports shall be submitted in accordance with paragraph SUBMITTALS.

3.3.2 Acceptance Test

The testing shall be in accordance with NFPA 72. The recommended tests in NFPA 72 shall be considered mandatory and shall verify that all previous deficiencies have been corrected. Acceptance testing shall be done by WPFD Inspectors and Electric Shop personnel. The tests shall include the following:

a. Tests to indicate there are no grounded, shorted, or open circuit .

b. Tests of each radio fire alarm transmitter/receiver/transceiver/ repeater.

c. Tests of radio fire alarm monitoring base station for all required functions.

d. Tests of normal and emergency power supplies.

3.3.3 Training

The Contractor shall conduct a training course for operating staff in the building where the system is installed as designated by the Contracting Officer. The training period shall consist of 1 training day, 8 hours per day and shall start after the system is functionally completed but prior to the final acceptance tests. The field instructions shall cover all of the items contained in the approved operating and maintenance instructions.

-- End of Section --

SECTION 13930

COMBINATION STANDPIPE/SPRINKLER SYSTEM

PART 1 GENERAL

1.1 REFERENCES

The publications listed below form a part of this specification to the extent referenced. The publications are referred to in the text by basic designation only.

AMERICAN SOCIETY FOR TESTING AND MATERIALS (ASTM)

ASTM A 53	(1997) Pipe, Steel, Black and Hot-Dipped, Zinc-Coated, Welded and Seamless
ASTM A 135	(1997) Electric-Resistance-Welded Steel Pipe
ASTM A 183	(1983; R 1990) Carbon Steel Track Bolts and Nuts
ASTM A 536	(1984; R 1993) Ductile Iron Castings
ASTM A 795	(1996) Black and Hot-Dipped Zinc-Coated (Galvanized) Welded and Seamless Steel Pipe for Fire Protection Use

AMERICAN SOCIETY OF MECHANICAL ENGINEERS (ASME)

ASME B16.1	(1989) Cast Iron Pipe Flanges and Flanged Fittings
ASME B16.3	(1992) Malleable Iron Threaded Fittings
ASME B16.4	(1992) Cast Iron Threaded Fittings
ASME B16.9	(1993) Factory-Made Wrought Steel Buttwelding Fittings
ASME B16.11	(1996) Forged Fittings, Socket-Welding and Threaded
ASME B16.21	(1992) Nonmetallic Flat Gaskets for Pipe Flanges
ASME B18.2.1	(1996) Square and Hex Bolts and Screws Inch Series
ASME B18.2.2	(1987; R 1993) Square and Hex Nuts (Inch

Series)

AMERICAN WATER WORKS ASSOCIATION (AWWA)

AWWA-01	(1995) Standard Methods for the Examination of Water and Wastewater
AWWA B300	(1992) Hypochlorites
AWWA B301	(1992) Liquid Chlorine
AWWA M20	(1973) Manual: Water Chlorination Principles and Practices

FACTORY MUTUAL ENGINEERING AND RESEARCH (FM)

FM P7825a	(1998) Approval Guide Fire Protection
FM P7825b	(1998) Approval Guide Electrical Equipment

MANUFACTURERS STANDARDIZATION SOCIETY OF THE VALVE AND FITTINGS INDUSTRY (MSS)

MSS SP-71	(1997) Cast Iron Swing Check Valves, Flanges and Threaded Ends

NATIONAL FIRE PROTECTION ASSOCIATION (NFPA)

NFPA 13	(1996) Standard for the Installation of Sprinkler Systems
NFPA 14	(1996) Standard for the Installation of Standpipe and Hose Systems
NFPA 1963	(1998) Standard for Fire House Connections

NATIONAL INSTITUTE FOR CERTIFICATION IN ENGINEERING TECHNOLOGIES (NICET)

NICET 1014	(1995) Program Detail Manual for Certification in the Field of Fire Protection Engineering Technology (Field Code 003) Subfield of Automatic Sprinkler System Layout

UNDERWRITERS LABORATORIES (UL)

UL 668	(1995) Hose Valves For Fire Protection Service
UL Bld Mat Dir	(1998) Building Materials Directory
UL Fire Prot Dir	(1998) Fire Protection Equipment Director

1.2 GENERAL REQUIREMENTS

A complete operational Automatic Combination Standpipe/Sprinkler System shall be provided and installed ``through-out" the entire building complex, unless modified herein. The system shall be designed and installed in accordance with the documents identified in Article 1.7 References herein. When any provision of these Specifications, Construction Documents or References herein is found to be in conflict, the provision which establishes the higher standard shall prevail unless written authorization to the contrary is obtained by the fire protection system contractor from the Authority Having Jurisdiction and the Contracting Officer.

The new systems as identified on the Construction Documents shall connect to the existing building's sprinkler/standpipe and fire pump system.

1.2.1 Hydraulic Design

The entire combination standpipe/sprinkler system shall be hydraulically designed in accordance with the established procedures of NFPA-13 "Sprinkler Systems" and NFPA-14 "Standpipe Systems".

The hydraulic design shall be based on the following water supply evaluation:

Static - 60 psi
Residual - 59 psi
Flow - 500 gpm

and the use of an existing electric fire pump rated at 2000 gpm at 140 psi with an existing main relief valve set at 175 psi discharge.

The hydraulic design and pipe sizing shall be such that the system pressure demand shall not exceed 165 psi at the fire pump discharge outlet.

The hydraulic design/pipe sizing shall not exceed a velocity of 40 ft/sec. anywhere in the system piping configuration.

1.2.1.1 Hose Demand

An allowance for exterior hose streams of 250 gpm for Light Hazard Criteria and 500 gpm for Ordinary Hazard Criteria shall be added to the sprinkler system demand at the existing fire hydrant closest to the point where the water fire service enters the building.

1.2.1.2 Basis for Calculations

The design of the system shall be based on the water supply identified in Section 1.2.1, Hydraulic Design and the Use of Black Steel Schedule 40 piping throughout, and a Hazen-Williams Formula with a "C" value of 120.

The standpipe system shall be sized to provide a minimum of 250 gpm at 100 psi at the hose valve outlet at the two (2) remote hose valve locations for a total demand of 500 gpm and a minimum of 250 gpm at 65 psi at each hose valve outlet with a simultaneous operation of four (4) hose valves for a

total demand of 1000 gpm.

The area/density method as identified in NFPA-13 "Sprinkler Systems" and MIL HDBK-1008C shall be used and as noted herein (sprinkler zone/design criteria) and identified on the Construction Documents.

Sprnkler Zon	Design Criteri	Identification
1st Floor		
1 (Preaction Sys.)	.20/3000	Elect/Emergency Rooms
2	.15/3000	Pool/Recondition
3	.15/3000	Existing
4	.15/3000	Existing
5	.10/3000	Stair 3/Atrium
6	.15/3000	Stair 4/Pool
7	.10/3000	Existing Stair/Lobby
2nd Floor		
8	.15/3000	Stair 1/Wrestling
9	.15/1000	Running Track
10	.10/3000	Stair 3/Atrium
11	.15/3000	Stair 4/Boxing
12	.15/3000	Stair 3/Wrestling
13	.10/3000	Existing Stair/Lobby
3rd Floor		
14	.15/3000	Stair 1/Weights
15	.20/3000	Existing Gym
16	.15/3000	Stair 2/Gym
17	.10/3000	Stair 3/Atrium
18	.10/3000	Existing Stair Lobbies
19	.15/3000	Stair 4/General Offices
4th Floor		
20	.10/3000	Stair 6/Corridor
21	.15/3000	Stair 1/Raq.Ball/Comm.Ar
22	.10/3000	Raquetball Courts
23	.10/3000	Raquetball Courts
24	.15/3000	Stair 3 & Gym
25	.15/3000	Stair 4 & Gym
26	.10/3000	Elev./Stair Tower
27	.10/3000	Elev./Stair Tower
5th Floor		
28	.15/3000	Stair 2/Gym
29	.20/3000	Stair 4/Mech. Room
30	.10/3000	Stair 3/Vestibule

Sprnkler Zon	Design Criteri	Identification
31	.15/3000	@Elev./Stair Tower
6th Floor		
32	.10/3000	Atrium/Wall
33	.10/3000	6th Floor Elev/Vestibule
34	.20/3000	Stair 1/Mech. Room
35	.20/3000	Stair 3/Mech. Room
7th Floor		
36	.10/3000	Elev. Machine Room
Basement		
37	.15/3000	Stair 5/Gen. Office Area
38	.10/3000	Stair 6/Pool
39	.10/3000	Stair 3/Corridor
40	.10/3000	Stair 3/Pool

1.2.2 Sprinkler Spacing

Sprinklers shall be uniformly spaced throughout the system. Maximum spacing shall be as specified in NFPA 13 "Sprinkler System" for the specific hazard. Special extended coverage sprinklers shall not be used.

1. Exception #1: Racquetball courts, sprinklers UL Listed for 400 sq.ft. (20' x 20') shall be used.

2. Exception #2: Existing Building "B" entry lobbies retrofit areas on 1st, 2nd floors and stairwells within the area shall use extended coverage sidewall and pendant sprinklers.

1.3 SUBMITTALS

Government approval is required for submittals with a "GA" designation; submittals having an "FIO" designation are for information only. Submittals related to system configuration, hydraulic calculations, and equipment selection, including manufacturer's catalog data, working drawings, connection drawings, control diagrams and certificates shall be submitted concurrently as a complete package. The package will be reviewed by the U.S. Army Engineer District Fire Protection Engineer. The following shall be submitted in accordance with Section 01330 SUBMITTAL PROCEDURES:

SD-01 Data

Load Calculations for Sizing Sway Bracing; GA

For systems that are required to be protected against damage from earthquakes, load calculations shall be provided for sizing of sway bracing.

Sprinkler System Equipment; GA.

Manufacturer's Catalog Data for each separate piece of equipment proposed for use in the system. Data shall indicate the name of the manufacturer of each item of equipment, with data highlighted to indicate model, size, options, etc. proposed for installation. In addition, a complete equipment list which includes equipment description, model number and quantity shall be provided.

Hydraulic Calculations; GA.

Hydraulic calculations, including a drawing showing hydraulic reference points and pipe segments.

Spare Parts; GA.

Spare parts data shall be included for each different item of material and equipment specified. The data shall include a complete list of parts and supplies, with current unit prices and source of supply, and a list of parts recommended by the manufacturer to be replaced after 1 year and 3 years of service. A list of special tools and test equipment required for maintenance and testing of the products supplied by the Contractor shall be included.

SD-04 Drawings

Sprinkler System Shop Drawings; GA.

Detail drawings conforming to the requirements established for working plans as prescribed in NFPA 13. Drawings shall include plan and elevation views which establish that the equipment will fit the allotted spaces with clearance for installation and maintenance. Each set of drawings shall include the following:

a. Descriptive index of drawings in the submittal with drawings listed in sequence by drawing number. A legend identifying device symbols, nomenclature, and conventions used.

b. Floor plans drawn to a scale not less than 1/8" = 1'-0" which clearly show locations of sprinklers, risers, pipe hangers, seismic separation assemblies, sway bracing, inspector's test connections, drains, and other applicable details necessary to clearly describe the proposed arrangement. Each type of fitting used and the locations of bushings, reducing couplings, and welded joints shall be indicated.

c. Actual center-to-center dimensions between sprinklers on branch lines and between branch lines; from end sprinklers to adjacent walls; from walls to branch lines; from sprinkler feed mains, cross-mains and branch lines to finished floor and roof or ceiling. A detail shall show the dimension from the sprinkler and sprinkler deflector to the ceiling in finished areas.

d. Longitudinal and transverse building sections showing typical branch line and cross-main pipe routing as well as elevation of

each typical sprinkler above finished floor.

e. Details of each type of riser assembly; pipe hanger; sway bracing for earthquake protection, and restraint of underground water main at point-of-entry into the building, and electrical devices and interconnecting wiring.

f. Sprinkler Contractor shall coordinate new sprinkler system with existing sprinkler system and all other trades.

Coordination Drawings; FIO.

The Mechanical Contractor shall prepare Coordination Drawings showing all of the work (equipment, piping, ductwork, conduit, etc.) to be installed as part of his work. The Coordination Drawings shall be on reproducible transparencies at not less than 3/8 inch = 1 ft.-0 inch scale.

The fire protection contractor shall show all of the work associated with this section of the specifications in the sequence prescribed below. The sequence of coordination drawings shall be HVAC-PLBG-FP-ELEC-GC unless otherwise determined by the Contracting Officer or the General Contractor.

The fire protection contractor shall attend a series of meetings arranged by the General Contractor to resolve any real or apparent interferences or conflicts with the work of the other Contractors or with ceiling heights shown on the drawings.

The fire protection contractor shall then make adjustments to his work on the Coordination Drawings to resolve any real or apparent interferences or conflicts.

After any real or apparent interferences and conflicts have been incorporated into the Coordination Drawings, the fire protection contractor shall "sign-off" the final Coordination Drawings.

The fire protection contractor shall not install any of his work prior to "sign-off" of final Coordination Drawings. If the work specified in this section proceeds prior to sign-off of Coordination Drawings, any change to this work to correct the interferences and conflicts which result will be made by the fire protection contractor at no additional cost to the project.

Coordination Drawings are for all contractor's use during construction and shall not be construed as replacing any shop, "as-built", or Record Drawings required elsewhere in these Contract Documents.

Review of Coordination Drawings shall not relieve any contractor from his overall responsibility for coordination of all work performed pursuant to the Contract or from any other requirements of the Contract.

As-Built Drawings; FIO.

As-built drawings, no later than 14 working days after completion of the Final Tests. The sprinkler system shop drawings shall be updated to reflect as-built conditions after work is completed and shall be on

reproducible full-size mylar film.

SD-06 Instructions

Test Procedures; GA.

Proposed test procedures for piping hydrostatic test, testing of alarms, at least 14 days prior to the start of related testing.

SD-07 Schedules

Preliminary Tests; GA.

A schedule of preliminary tests, at least 14 days prior to the proposed start of the tests.

Final Test; GA.

Upon successful completion of tests specified under paragraph PRELIMINARY TESTS, written notification shall be given to the Contracting Officer of the date for the final acceptance test. Notification shall be provided at least 14 days prior to the proposed start of the test. Notification shall include a copy of the Contractor's Material & Test Certificates.

SD-08 Statements

Installer Qualifications; GA.

Qualifications of the sprinkler installer.

Submittal Preparer's Qualifications; GA.

The name and documentation of certification of the individual who will prepare the submittals, prior to the submittal of the drawings and hydraulic calculations.

SD-13 Certificates

Contractor's Material & Test Certificates; GA.

Certificates, as specified in NFPA 13, shall be completed and signed by the Contractor's Representative performing required tests for both underground and aboveground piping.

SD-19 Operation and Maintenance Manuals

Sprinkler System; GA.

Manuals shall be in loose-leaf binder format and grouped by technical sections consisting of manufacturer's standard brochures, schematics, printed instructions, general operating procedures, and safety precautions. The manuals shall list routine maintenance procedures possible breakdowns, and repairs, and troubleshooting guide. This shall include procedures and instructions pertaining to frequency of preventive maintenance, inspection,

adjustment, lubrication and cleaning necessary to minimize corrective maintenance and repair.

1.4 HYDRAULIC CALCULATIONS

Hydraulic calculations shall be as outlined in NFPA 13 except that calculations shall be performed by computer using software specifically designed for fire protection system design. Software which uses k-factors for typical branch lines is not acceptable. Calculations shall be taken back to the water supply source unless water supply data is otherwise indicated. Calculations shall substantiate that the design area indicated is the hydraulically most demanding. Water supply curves and system requirements shall be plotted on semi-logarithmic graph paper so as to present a summary of the complete hydraulic calculation. A summary sheet listing sprinklers in the design area and their respective hydraulic reference points, elevations, actual discharge pressures and actual flows shall be provided. Elevations of hydraulic reference points (nodes) shall be indicated. Documentation shall identify each pipe individually and the nodes connected thereto. The diameter, length, flow, velocity, friction loss, number and type fittings, total friction loss in the pipe, equivalent pipe length and Hazen-Williams coefficient shall be indicated for each pipe. For gridded systems, calculations shall show peaking of demand area friction loss to verify that the hydraulically most demanding area is being used. Also for gridded systems, a flow diagram indicating the quantity and direction of flows shall be included. A drawing showing hydraulic reference points (nodes) and pipe designations used in the calculations shall be included and shall be independent of shop drawings.

1.5 SUBMITTAL PREPARER'S QUALIFICATIONS

The sprinkler system submittals, including as-built drawings, shall be prepared by an individual who is either a registered professional engineer or who is certified as a Level IV Technician by National Institute for Certification in Engineering Technologies (NICET) in the Automatic Sprinkler System Layout subfield of Fire Protection Engineering Technology in accordance with NICET 1014.

1.6 INSTALLER QUALIFICATIONS

The installer shall be experienced and regularly engaged in the installation of the type and complexity of system included in this project. A statement prior to submittal of any other data or drawings, that the proposed sprinkler system installer is regularly engaged in the installation of the type and complexity of system included in this project shall be provided. In addition, data identifying the location of at least three systems recently installed by the proposed installer which are comparable to the system specified shall be submitted. Contractor shall certify that each system has performed satisfactorily, in the manner intended, for a period of not less than 6 months.

1.7 REGULATORY REQUIREMENTS

Compliance with referenced NFPA standards is mandatory. This includes advisory provisions listed in the appendices of such standards, as though

the word "shall" had been substituted for the word "should" wherever it appears. Applicable material and installation standards referenced in Appendix A of NFPA 13 and NFPA 14 shall be considered mandatory the same as if such referenced standards were specifically listed in this specification. In the event of a conflict between specific provisions of this specification and applicable NFPA standards, this specification shall govern. All requirements that exceed the minimum requirements of NFPA 13 shall be incorporated into the design. Reference to "authority having jurisdiction" shall be interpreted to mean the Contracting Officer.

1.8 DELIVERY AND STORAGE

Equipment placed in storage shall be stored with protection from the weather, humidity and temperature variations, dirt and dust or other contaminants.

PART 2 PRODUCTS

2.1 GENERAL EQUIPMENT REQUIREMENTS

2.1.1 Standard Products

Materials and equipment shall be standard products of a manufacturer regularly engaged in the manufacture of such products and shall essentially duplicate items that have been in satisfactory use for at least 2 years prior to bid opening.

2.1.2 Requirements for Fire Protection Service

Equipment and materials shall have been tested by Underwriters Laboratories, Inc. and listed in UL Fire Prot Dir or approved by Factory Mutual and listed in FM P7825a and FM P7825b. Where the terms "listed" or "approved" appear in this specification, such shall mean listed in UL Fire Prot Dir or FM P7825a and FM P7825b

2.1.3 Nameplates

Major components of equipment shall have the manufacturer's name, address, type or style, model or serial number, and catalog number on a plate permanently affixed to the item of equipment.

2.2 ABOVEGROUND PIPING SYSTEMS

Aboveground piping shall be steel.

Note: Pipe sizes shall not be smaller than the sizes indicated on the Contract Drawings.

2.2.1 Steel Piping System

2.2.1.1 Steel Pipe

Except as modified herein, steel pipe shall be black or galvanized, except provide galvanized where indicated, as permitted by NFPA 13 and shall

conform to applicable provisions of ASTM A 795, ASTM A 53, or ASTM A 135. Pipe in which threads or grooves are cut shall be Schedule 40 or shall be listed by Underwriters' Laboratories to have a corrosion resistance ratio (CRR) of 1.0 or greater after threads or grooves are cut. Pipe shall be marked with the name of the manufacturer, kind of pipe, and ASTM designation.

2.2.1.2 Fittings for Non-Grooved Steel Pipe

Fittings shall be cast iron conforming to ASME B16.4, steel conforming to ASME B16.9 or ASME B16.11, or malleable iron conforming to ASME B16.3. Steel press fittings shall be approved for fire protection systems. Galvanized fittings shall be used for piping systems or portions of piping systems utilizing galvanized piping. Fittings into which sprinklers, drop nipples or riser nipples (sprigs) are screwed shall be threaded type. Plain-end fittings with mechanical couplings, fittings which use steel gripping devices to bite into the pipe and segmented welded fittings shall not be used.

2.2.1.3 Grooved Mechanical Joints and Fittings

Joints and fittings shall be designed for not less than 175 psi service and shall be the product of the same manufacturer. Fitting and coupling houses shall be ductile iron conforming to ASTM A 536, Grade 65-45-12. Gasket shall be the flush type that fills the entire cavity between the fitting and the pipe. Nuts and bolts shall be heat-treated steel conforming to ASTM A 183 and shall be cadmium plated or zinc electroplated. All fittings shall be listed.

2.2.1.4 Flanges

Flanges shall conform to NFPA 13 and ASME B16.1. Gaskets shall be non-asbestos compressed material in accordance with ASME B16.21, 1/16 inch thick, and full face or self-centering flat ring type. Bolts shall be squarehead conforming to ASME B18.2.1 and nuts shall be hexagon type conforming to ASME B18.2.2.

2.2.2 Pipe Hangers

Hangers shall be listed in UL Fire Prot Dir or FM P7825a and FM P7825b and of the type suitable for the application, construction, and pipe type and sized involved.

2.2.3 Valves

2.2.3.1 Control Valve and Gate Valve

Manually operated sprinkler control valve and gate valve shall be outside stem and yoke (OS&Y) type and shall be listed in UL Bld Mat Dir or FM P7825a and FM P7825b.

2.2.3.2 Check Valve

Check valves 2 in. and larger shall be listed in UL Fire Protection

Directory, or FM P7825a and FM P7825b. Check valves 4 inches and larger shall be of the swing type with flanged cast iron body and flanged inspection plates, shall have a clear waterway and shall meet the requirements of MSS SP-71, for Type 3 or 4.

2.2.3.3 Hose Valve

Valve shall comply with UL 668 and shall have a minimum rating of 300 psi. Valve shall be non-rising stem, all bronze, 90 degree angle type, with 2-1/2 inch American National Standard Fire Hose Screw Thread (NH) male outlet in accordance with NFPA 1963. Hose valve shall be provided with 2-1/2 to 1-1/2 inch reducer. Hose valves shall be equipped with lugged cap with drip drain, cap gasket and chain. Valve finish shall be rough chrome plated. Hose threads shall be compatible with local Fire Department.

2.3 ALARM INITIATING AND SUPERVISORY DEVICES

2.3.1 Sprinkler Waterflow Indicator Switch, Vane Type

Switch shall be vane type with a pipe saddle and cast aluminum housing. The electro-mechanical device shall include a flexible, low-density polyethylene paddle conforming to the inside diameter of the fire protection pipe. The device shall sense water movements and be capable of detecting a sustained flow of 10 gpm or greater. The device shall contain a retard device adjustable from 0 to 90 seconds to reduce the possibility of false alarms caused by transient flow surges. The switch shall include two SPDT (Form C) contacts, and shall be equipped with a silicone rubber gasket to assure positive water seal and a dustproof cover and gasket to seal the mechanism from dirt and moisture.

2.3.2 Sprinkler Pressure (Waterflow) Alarm Switch

Pressure switch shall include a metal housing with a neoprene diaphragm, SPDT snap action switches and a 1/2 inch NPT male pipe thread. The switch shall have a maximum service pressure rating of 175 psi. There shall be two SPDT (Form C) contacts factory adjusted to operate at 4 to 8 psi. The switch shall be capable of being mounted in any position in the alarm line trim piping of the alarm check valve.

2.3.3 Valve Supervisory (Tamper) Switch

Switch shall be suitable for mounting to the type of control valve to be supervised open. The switch shall be tamper resistant and contain one set of SPDT (Form C) contacts arranged to transfer upon removal of the housing cover or closure of the valve of more than two rotations of the valve stem.

2.3.4 Inspector's Test Connection

Alarm Inspector's test assembly for riser shall be provided with a visable flow device in accordance with NFPA 13

2.4 PRE-ACTION VALVE ASSEMBLY

The Pre-Action valve shall be a latching differential type listed in UL-04

or FM P7825 and shall be complete with trim piping, valves, fittings, pressure gauges, priming water fill cup, velocity drip check, drip cup, and other ancillary components as required for proper operation.

2.5 AIR SUPPLY SYSTEM

Air supply system shall be in accordance with NFPA 13. The connection pipe from the air compressor shall not be less than 1/2 inch in diameter and shall enter the system above the priming water level of the dry pipe valve. A check valve shall be installed in the air line piping and a shutoff valve of the renewable disc type shall be installed on the supply side of this check valve. The air supply system shall be sized to pressurize the sprinkler system.

2.5.1 Air Compressor

Compressor shall be single stage oilless type, air cooled, electric-motor driven, equipped with a check valve, shutoff valve and pressure switch for automatic starting and stopping. Pressure switch shall be factory set to start the compressor and stop it at 300 kPa. and 40 psi. A safety relief valve shall be provided.

2.5.2 Air Pressure Maintenance Device

Device shall be a pressure regulator which automatically reduces supply air pressure to pressure required to be maintained in the piping system. The device shall have a cast bronze body and valve housing complete with diaphragm assembly, spring, filter, ball check to prevent backflow, 1/16 inch restriction to prevent rapid pressurization of the system, and adjustment screw.

2.5.3 Air Supply Piping System

System shall be configured so that each Pre-Action system is equipped with a separate pressure maintenance device, air compressor, shutoff valve, bypass valve and pressure gauge. Piping shall be galvanized steel in accordance with ASTM A 795 or ASTM A 53.

2.5.4 Low Air Pressure Alarm Device

Each Pre-Action valve trim shall be provided with a local alarm device consisting of a metal enclosure containing an alarm horn or bell, silence switch, green power-on light, red low-air alarm light and amber trouble light. The alarm device shall be activated by the low air pressure switch. Upon reduction of sprinkler system pressure to approximately 10 psig above the dry valve trip point pressure, the low air pressure switch shall actuate the audible alarm device and a red low-air alarm light. Restoration of system pressure shall cause the low-air alarm light to be extinguished and the audible alarm to be silenced. An alarm silence switch shall be provided to silence the audible alarm. An amber trouble light shall be provided which will illuminate upon operation of the silence switch and shall be extinguished upon return to its normal position.

2.6 WATER MOTOR ALARM ASSEMBLY

Assembly shall include a body housing, impeller wheel, drive shaft, striker assembly, gong, wall plate and related components necessary for complete operation. Minimum 3/4 inch galvanized piping shall be provided between the housing and the alarm check valve. Drain piping from the body housing shall be minimum 1 inch galvanized steel and shall be arranged to drain to the outside of the building. Piping shall be galvanized both on the inside and on the outside surfaces.

2.7 FIRE DEPARTMENT CONNECTION

Existing.

2.8 SPRINKLERS

Sprinklers shall be used in accordance with their listed spacing limitations. Temperature classification shall be ordinary and high as indicated on Drawings. Sprinklers in high heat areas including attic spaces or in close proximity to unit heaters shall have temperature classification in accordance with NFPA 13. Sprinklers with internal O-rings shall not be used.

2.8.1 Upright Sprinkler

Upright sprinkler shall be brass quick-response type and shall have a nominal 1/2 inch or 17/32 inch orifice.

2.8.2 Pendent Sprinkler

Pendent sprinkler shall be of the fusible strut or glass bulb type, concealed quick-response type with nominal 1/2 inch or 17/32 inch orifice. Pendent sprinklers shall have a white enamel finish.

2.8.3 Sidewall Sprinkler

Sidewall sprinklers shall have a nominal 1/2 inch orifice. Sidewall sprinklers shall have a polished chrome finish. Sidewall sprinklers shall be the quick-response type.

2.8.4 Corrosion Resistant Sprinkler

Corrosion resistant sprinkler shall be the upright or pendent type installed in locations as indicated per NFPA 13 2-2.5. Corrosion resistant coatings shall be factory-applied by the sprinkler manufacturer.

2.9 DISINFECTING MATERIALS

2.9.1 Liquid Chlorine

Liquid chlorine shall conform to AWWA B301.

2.9.2 Hypochlorites

Calcium hypochlorite and sodium hypochlorite shall conform to AWWA B300.

2.10 ACCESSORIES

2.10.1 Sprinkler Cabinet

Spare sprinklers shall be provided in accordance with NFPA 13 and shall be packed in a suitable metal or plastic cabinet. Spare sprinklers shall be representative of, and in proportion to, the number of each type and temperature rating of the sprinklers installed. At least one wrench of each type required shall be provided.

2.10.2 Pendent Sprinkler Escutcheon

Escutcheon shall be one-piece metallic type with a depth of less than 3/4 inch and suitable for installation on pendent sprinklers. The escutcheon shall have a factory finish that matches the pendent sprinkler heads. Assembly for recessed or flush type sprinklers shall be listed per NFPA 13.

2.10.3 Pipe Escutcheon

Escutcheon shall be polished chromium-plated zinc alloy, or polished chromium-plated copper alloy. Escutcheons shall be either one-piece or split-pattern, held in place by internal spring tension or set screw.

2.10.4 Sprinkler Guard

Guards shall be a steel wire cage designed to encase the sprinkler and protect it from mechanical damage. Guards shall be provided on sprinklers located in all Mechanical Rooms. Guards shall be listed and provided on sprinklers exposed to mechanical damage.

2.10.5 Identification Sign

Valve identification sign shall be minimum 6 inches wide x 2 inches high with enamel baked finish on minimum 18 gauge steel or 0.024 inch aluminum with red letters on a white background or white letters on red background. Wording of sign shall include, but not be limited to "main drain," "auxiliary drain," "inspector's test," "alarm test," "alarm line," and similar wording as required to identify operational components.

PART 3 EXECUTION

3.1 INSTALLATION REQUIREMENTS

The installation shall be in accordance with the applicable provisions of NFPA 13, NFPA 14 and publications referenced therein.

3.2 ABOVEGROUND PIPING INSTALLATION

Piping shall be run straight and bear evenly on hangers and supports.

3.2.1 Protection of Piping Against Earthquake Damage

The system piping shall be protected against damage from earthquakes.

Seismic protection of the piping system shall be provided in accordance with military handbook MIL-HDBK-1008C and NFPA 13 and Appendix A, with the exception that the "Earthquake Zones" map of Appendix A shall not apply to this project. Seismic protection shall include flexible couplings, sway bracing, seismic separation assemblies where piping crosses building seismic separation joints, and other features as required in NFPA 13 for protection of piping against damage from earthquakes. Branch lines shall be equipped with sway braces at the end sprinkler head and at intervals not exceeding 30 ft.

3.2.2 Piping in Exposed Areas

Exposed piping shall be installed so as not to diminish exit access widths, corridors or equipment access. Exposed horizontal piping, including drain piping, shall be installed to provide maximum headroom.

3.2.3 Piping in Finished Areas

In areas with suspended or dropped ceilings and in areas with concealed spaces above the ceiling, piping shall be concealed above ceilings. Piping shall be inspected, tested and approved before being concealed. Risers and similar vertical runs of piping in finished areas shall be concealed.

3.2.4 Pendent Sprinklers

Drop nipples to pendent sprinklers shall consist of minimum 1 inch pipe with a reducing coupling into which the sprinkler shall be threaded. Hangers shall be provided on arm-overs to drop nipples supplying pendent sprinklers when the arm-over exceeds 12 inches. Where sprinklers are installed below suspended or dropped ceilings, drop nipples shall be cut such that sprinkler ceiling plates or escutcheons are of a uniform depth throughout the finished space. The outlet of the reducing coupling shall not extend more than 1 inch below the underside of the ceiling. On pendent sprinklers installed below suspended or dropped ceilings, the distance from the sprinkler deflector to the underside of the ceiling shall not exceed 4 inches. Recessed pendent sprinklers shall be installed such that the distance from the sprinkler deflector to the underside of the ceiling shall not exceed the manufacturer's listed range and shall be of uniform depth throughout the finished area.

3.2.4.1 Pendent Sprinkler Locations

Pendent sprinklers in suspended ceilings shall be a minimum of 6 inches from ceiling grid.

3.2.5 Upright Sprinklers

Riser nipples or "sprigs" to upright sprinklers shall contain no fittings between the branch line tee and the reducing coupling at the sprinkler. Riser nipples exceeding 30 inches in length shall be individually supported.

3.2.5.1 Sidewall Sprinklers

Sidewall sprinklers shall be located between 4 inches and 6 inches below ceilings.

3.2.6 Pipe Joints

Pipe joints shall conform to NFPA 13, except as modified herein. Not more than four threads shall show after joint is made up. Welded joints will be permitted, only if welding operations are performed as required by NFPA 13 at the Contractor's fabrication shop, not at the project construction site. Flanged joints shall be provided where indicated or required by NFPA 13. Grooved pipe and fittings shall be prepared in accordance with the manufacturer's latest published specification according to pipe material, wall thickness and size. Grooved couplings and fittings shall be from the same manufacturer.

3.2.7 Reducers

Reductions in pipe sizes shall be made with one-piece tapered reducing fittings. The use of grooved-end or rubber-gasketed reducing couplings will not be permitted. When standard fittings of the required size are not manufactured, single bushings of the face type will be permitted. Where used, face bushings shall be installed with the outer face flush with the face of the fitting opening being reduced. Bushings shall not be used in elbow fittings, in more than one outlet of a tee, in more than two outlets of a cross, or where the reduction in size is less than 1/2 inch.

3.2.8 Pipe Penetrations

Cutting structural members for passage of pipes or for pipe-hanger fastenings will not be permitted. Pipes that must penetrate concrete or masonry walls or concrete floors shall be core-drilled and provided with pipe sleeves. Each sleeve shall be Schedule 40 galvanized steel, ductile iron or cast iron pipe and shall extend through its respective wall or floor and be cut flush with each wall surface. Sleeves shall provide required clearance between the pipe and the sleeve per NFPA 13. The space between the sleeve and the pipe shall be firmly packed with mineral wool insulation. Where pipes pass through fire walls, fire partitions, or floors, a fire seal shall be placed between the pipe and sleeve in accordance with Section 07840 FIRESTOPPING. In penetrations which are not fire-rated or not a floor penetration, the space between the sleeve and the pipe shall be sealed at both ends with plastic waterproof cement which will dry to a firm but pliable mass or with a mechanically adjustable segmented elastomer seal.

3.2.9 Escutcheons

Escutcheons shall be provided for pipe penetration of ceilings and walls in exposed areas. Escutcheons shall be securely fastened to the pipe at surfaces through which piping passes.

3.2.10 Inspector's Test Connection

Unless otherwise indicated, a combination test and drain assembly with an integral relief valve, site glass and properly sized sprinkler orifice shall be provided for each sprinkler control valve assembly as noted on Construction Documents detail.

3.2.11 Drains

Common drain risers and lateral drain piping shall be provided at all sprinkler control valve assemblies and interconnected with combination test and drain assembly and common drain piping shall discharge to a safe place at the exterior of the building as not to cause water damage.

3.2.12 Identification Signs

Signs shall be affixed to each control valve, inspector test valve, main drain, auxiliary drain, test valve, and similar valves as appropriate or as required by NFPA 13. Hydraulic design data nameplates shall be permanently affixed to each sprinkler riser as specified in NFPA 13.

3.3 ELECTRICAL WORK

Alarm signal wiring connected to the building fire alarm control system shall be in accordance with Section 13850 and 13851 FIRE DETECTION AND ALARM SYSTEM, ADDRESSABLE.

3.4 DISINFECTION

After all system components are installed and hydrostatic test are successfully completed, each portion of the sprinkler system to be disinfected shall be thoroughly flushed with potable water until all entrained dirt and other foreign materials have been removed before introducing chlorinating material. Flushing shall be conducted by removing the flushing fitting of the cross mains and of the grid branch lines, and then back-flushing through the sprinkler main drains. The chlorinating material shall be hypochlorites or liquid chlorine. Water chlorination procedure shall be in accordance with AWWA M20. The chlorinating material shall be fed into the sprinkler piping at a constant rate of 50 parts per million (ppm). A properly adjusted hypochlorite solution injected into the system with a hypochlorinator, or liquid chlorine injected into the system through a solution-fed chlorinator and booster pump shall be used. Chlorination application shall continue until the entire system if filled. The water shall remain in the system for a minimum of 24 hours. Each valve in the system shall be opened and closed several times to ensure its proper disinfection. Following the 24-hour period, no less than 25 ppm chlorine residual shall remain in the system. The system shall then be flushed with clean water until the residual chlorine is reduced to less than one part per million. Samples of water in properly disinfected containers for bacterial examination will be taken from several system locations which are approved by the Contracting Officer. Samples shall be tested for total coliform organisms (coliform bacteria, fecal coliform, streptococcal, and other bacteria) in accordance with AWWA-01. The testing method shall be either the multiple-tube fermentation technique or the membrane-filter technique. The disinfection shall be repeated until tests indicate the absence of coliform organisms (zero mean coliform density per 100

milliliters) in the samples for at least 2 full days. The system will not be accepted until satisfactory bacteriological results have been obtained.

3.5 FIELD PAINTING AND FINISHING

Field painting and finishing are specified in Section 09900 PAINTING, GENERAL.

3.6 PRELIMINARY TESTS

The system, including the existing underground water mains, and the new aboveground piping and existing fire pump system and system components, shall be tested to assure that equipment and components function as intended. The underground and aboveground interior piping systems and attached appurtenances subjected to system working pressure shall be tested in accordance with NFPA 13, NFPA 14, and NFPA 24. Upon completion of specified tests, the Contractor shall complete certificates as specified in paragraph SUBMITTALS.

3.6.1 Underground Piping

3.6.1.1 Flushing

Existing underground piping shall be flushed in accordance with NFPA 24. This includes the requirement to flush the lead-in connection to the fire protection system at a flow rate not less that the calculated maximum water demand rate of the system.

3.6.2 Aboveground Piping

3.6.2.1 Hydrostatic Testing

Aboveground piping shall be hydrostatically tested in accordance with NFPA 13 at not less than 200 psi or 50 psi in excess of maximum system operating pressure and shall maintain that pressure without loss for 2 hours. There shall be no drop in gauge pressure or visible leakage when the system is subjected to the hydrostatic test. The test pressure shall be read from a gauge located at the low elevation point of the system or portion being tested.

3.6.3 Testing of Alarm Devices

Each alarm switch shall be tested by flowing water through the inspector's test connection. Each water-operated alarm devices shall be tested to verify proper operation.

3.6.4 Main Drain Flow Test

Following flushing of the underground piping, a main drain test shall be made to verify the adequacy of the water supply. Static and residual pressures shall be recorded on the certificate specified in paragraph SUBMITTALS. In addition, a main drain test shall be conducted each time after a main control valve is shut and opened.

3.7 FINAL ACCEPTANCE TEST

A technician employed by the installing Contractor shall be present for the final tests and shall provide a complete demonstration of the operation of the system. This shall include operation of control valves and flowing of inspector's test connections to verify operation of associated waterflow alarm switches. After operation of control valves has been completed, the main drain test shall be repeated to assure that control valves are in the open position. In addition, the representative shall have available copies of as-built drawings and certificates of tests previously conducted. The installation shall not be considered accepted until identified discrepancies have been corrected and test documentation is properly completed and received.

-- End of Section --

SECTION 14210

ELEVATORS, ELECTRIC

PART 1 GENERAL

1.1 REFERENCES

The publications listed below form a part of this specification to the extent referenced. The publications are referred to in the text by basic designation only.

AMERICAN SOCIETY FOR TESTING AND MATERIALS (ASTM)

ASTM A 176	(1996) Stainless and Heat-Resisting Chromium Steel Plate, Sheet, and Strip
ASTM A 366/A 366M	(1996) Steel, Sheet, Carbon, Cold-Rolled, Commercial Quality
ASTM A 568/A 568M	(1996) Steel, Sheet, Carbon, and High-Strength, Low-Alloy, Hot-Rolled and Cold-Rolled, General Requirements for
ASTM A 569/A 569M	(1996) Steel, Carbon (0.15 Maximum, Percent), Hot-Rolled Sheet and Strip Commercial Quality
ASTM A 666	(1996a) Austenitic Stainless Steel Sheet, Strip, Plate, and Flat Bar
ASTM E 84	(1996a) Surface Burning Characteristics of Building Materials

AMERICAN SOCIETY OF MECHANICAL ENGINEERS (ASME)

ASME A17.1	(1993) Safety Code for Elevators and Escalators
ASME A17.2.1	(1993) Inspectors' Manual for Electric Elevators
ASME QEI-1	(1993; Addenda: QEI-1a-1995) Standard for the Qualification of Elevator Inspectors

CODE OF FEDERAL REGULATIONS (CFR)

36 CFR 1191	Americans with Disabilities Act (ADA) Accessibility Guidelines for Buildings and Facilities

FEDERAL STANDARDS (FED-STD)

FED-STD 795	(Basic) Uniform Federal Accessibility Standards

INSTITUTE OF ELECTRICAL AND ELECTRONICS ENGINEERS (IEEE)

IEEE C62.11	(1993) IEEE Standard Metal-Oxide Surge Arresters for AC Power Circuits
IEEE C62.41	(1991) Surge Voltages in Low-Voltage AC Power Circuits
IEEE C62.45	(1992) IEEE Guide on Surge Testing for Equipment Connected to Low-Voltage AC Power Circuits

INTERNATIONAL CONFERENCE OF BUILDING OFFICIALS (ICBO)

ICBO-01	(1994) Uniform Building Code (3 Vol.)

NATIONAL ELECTRICAL MANUFACTURERS ASSOCIATION (NEMA)

NEMA MG 1	(1993; Rev 1; Rev 2; Rev 3) Motors and Generators

NATIONAL FIRE PROTECTION ASSOCIATION (NFPA)

NFPA 70	(1996; Errata) National Electrical Code
NFPA 252	(1995) Fire Test of Door Assemblies

UNDERWRITERS LABORATORIES (UL)

UL 1449	(1985; Errata Apr 1986) Transient Voltage Surge Suppressors

1.2 SUBMITTALS

Government approval is required for submittals with a "GA" designation. Submittals having an "FIO" designation are for information only. The following shall be submitted in accordance with Section 01330 SUBMITTAL PROCEDURES:

SD-01 Data

Training Data; FIO.

Information describing the training course for operating personnel, training aids and samples of training aids and samples of training materials to be used, training schedules, and notification of training.

Elevator System; GA.

A complete list of equipment and material, including illustrations, schedules, manufacturer's descriptive data and technical literature, performance charts, catalog cuts, installation instructions, brochures, diagrams, and other information required for fabrication and installation of the equipment. Data shall include calculations for reaction loads imposed on building by elevator systems. Calculations to demonstrate compliance with ASME A17.1, Rule XXIV, and to demonstrate that the proposed elevator system meets requirements for seismic loading of zone 2A in accordance with ICBO-01; certified copies of test reports may be submitted on lieu of calculations. Spare parts data for each different item of material and equipment specified, after approval of detail drawings and not later than 2 weeks prior to date of beneficial occupancy. Data shall include a complete list of parts and supplies, with current unit prices and source of supply, and a list of parts recommended to be replaced and replacement interval required. Data shall include the appropriate sizing of electrical protective devices.

SD-04 Drawings

Elevator System; GA

Detail drawings including dimensioned layouts in plan and elevation showing the arrangement of elevator equipment, anchorage of equipment, clearances for maintenance and operation; and details on hoistway, doors and frames, operation and signal stations, controllers, motors, guide rails and brackets, and points of interface with normal power, fire alarm system, HVAC or exhaust systems, and interface with emergency power systems. Drawings shall show any revised building electrical system required to make supplied elevator system function as specified. Drawings shall contain complete wiring diagrams showing electrical connections and other details required to demonstrate sequence of operation and functions of system devices. Drawings shall include the appropriate sizing of electrical protective devices which are frequently different from National Electrical Code standard sizes.

SD-06 Instructions

Framed Instructions; FIO.

Diagrams, instructions, and other sheets, proposed for posting.

SD-08 Statements

Qualification Certificates; FIO.

Certificates of experience of elevator mechanics employed to install, supervise and test the elevator shall certify mechanics to have not less than 5 years experience installing, supervising and testing elevators of the type and rating specified. Certificate shall certify that elevator system installer is acceptable to elevator manufacturer, prior to installation of elevators.

SD-09 Reports

Testing; FIO.

Test reports in booklet form showing all field tests performed to adjust each component and all field tests performed to prove compliance with the specified performance criteria, upon completion and testing of installed system.

SD-14 Samples

Finishes; GA.

Samples of materials and products requiring color or finish selection.

SD-18 Records

Test Procedures; GA.

A plan detailing the testing procedures shall be submitted 60 days prior to performing the elevator tests.

SD-19 Operation and Maintenance Manuals

Elevator System; GA.

Six copies of operation manual outlining the step-by-step procedures for system startup, operation and shutdown. Manuals shall include manufacturer's name, model number, service manual parts list and brief description of all equipment, including basic operating features. Six copies of maintenance manual listing routine maintenance procedures, possible breakdowns and repairs, and troubleshooting guides. Manuals shall include equipment layout and complete wiring and control diagrams of the system as installed. Operation and maintenance manuals shall be approved prior to training course.

1.3 QUALIFICATIONS

Electric elevators shall be pre-engineered elevator systems, and provided by a company regularly engaged in the manufacture of elevator systems. The manufacturer shall either install the elevator system or provide letter of endorsement certifying that the elevator-system installer is acceptable to the manufacturer.

1.4 REGULATORY REQUIREMENTS

Design and fabrication shall be in accordance with ASME A17.1. Each car shall have the capacity to lift a live load, exclusive of the car and cable at a speed as specified in the following schedule. The approximate travel, terminal floors, number of stops and openings, and the car sizes shall be as shown in the schedule. The elevators shall serve the floors with stops and openings in accordance with the requirements indicated. Passenger and Freight elevators shall provide accessibility and usability for physically handicapped in accordance with the requirements for the handicapped in FED-STD 795 and 36 CFR 1191.

1.4.1 Elevator Schedule (Passenger)

Number of Elevators Required:	1.
Type:	Geared.
Service:	Passenger.
Capacity:	2500 pounds.
Speed:	350 fpm.
Platform Size:	7 ft-0in. wide by 5 ft.-o in. deep.
Clear Car Inside:	6 ft.-8 in. wide by 4 ft.-3 in. deep.
Net Travel:	68 ft.
Landings:	5 (B, 1,2,3,4).
Openings: Front	5.
Openings: Rear	0.
Entrance Type:	Side-Opening, single speed Horizontal Sliding

1.4.2 Elevator Schedule (Freight)

Number of Elevators Required:	1.
Type:	Geared
Loading Classification:	ASME A17.1 Class A.
Capacity:	12,000 pounds.
Speed:	200 fpm.
Platform Size:	10 ft.-4 in. wide by 12 ft.-0 in. deep.
Clear Car Inside:	10 ft.-0 in. wide by 11 ft.-7 in. deep.
Net Travel:	B floor to 6 floor (99 ft.).
Landings:	7 (B,1,2,3,4,5,6).
Openings: Front	7.

Openings:	Rear	0.
Entrance Type:		Vertical Bi-Parting

1.5 DESIGNATED LANDING

For the purposes of firefighter's service and emergency operations, as required by Section 211, ASME A17.1, the designated landing or level shall be the first floor. The alternate landing or level shall be the Second floor.

1.6 DELIVERY AND STORAGE

All equipment delivered and placed in storage shall be stored with protection from the weather, excessive humidity and excessive temperature variations; and dirt, or other contaminants.

1.7 FIELD MEASUREMENTS

The Contractor shall become familiar with all details of the work, verify all dimensions in the field and advise the Contracting Officer of any discrepancy before performing any work.

1.8 WARRANTY

Warranty service shall be provided for each elevator for a period of 12 months after date of acceptance by Contracting Officer. Warranty service shall be performed only by trained elevator mechanics during regular working hours, and shall include manufacturer's warranty requirements including but not limited to adjusting, labor and parts needed to keep the elevator in proper operation. Testing and adjustments shall be in accordance with the applicable provisions of ASME A17.1 and ASME A17.2.1. Emergency callback service shall be included and available 24 hours a day, 7 days per week, with an initial telephone response time of one hour and a response time of four hours for a mechanic to the site. Inspection and service for fire service operation seismic requirements shall be performed every 6 months. Documentation of inspection and testing, and certification of successful operation shall be provided with each visit.

PART 2 PRODUCTS

2.1 GENERAL EQUIPMENT REQUIREMENTS

Note: Work specified herein pertains to both the Passenger Elevator and the Frieght Elevator, unless otherwise noted.

2.1.1 Standard Products

Material and equipment shall be the standard products of manufacturers regularly engaged in the fabrication of elevators and/or elevator parts, and shall essentially duplicate items which have been in satisfactory use for at least 2 years prior to bid opening. Equipment shall be supported by a service organization that is available 24 hours a day, 7 days per week, with a response time of 4 hours.

2.1.2 Nameplates

Each major item of equipment shall have the manufacturer's name, address, type or style, model or serial number, catalog number, and electrical and mechanical characteristics on a plate secured to the item of equipment.

2.1.3 Special Tools

One set of special tools, calibration devices, and instruments required for operation, calibration, and maintenance of the equipment shall be provided.

2.1.4 Electrical Work

Changes to the electrical distribution system required for coordination with elevator equipment shall be performed and coordinated by the Contractor, at Contractor's expense. Electrical service for elevator machines shall be 480 volt, 60-Hertz, 3-phase, 4 wire solid neutral grounded alternating current. The elevator machine feeder for each elevator shall have a circuit breaker or fused disconnect switch located in the elevator machine room, and shall terminate at the control panel for that elevator. Electrical work shall conform to requirements in Section 16415 ELECTRICAL WORK, INTERIOR. A feeder with circuit breaker or fused disconnect switch located in the elevator machine room, shall be terminated at the control panel for each elevator. A telephone junction box and an elevator car lighting junction box shall be provided adjacent to each controller. A single-phase electrical circuit with grounded connection for video monitor shall be provided in machine room. A disconnect switch that will shutoff power to the elevator car lighting shall be provided in the elevator machine room adjacent to the elevator control panel.

2.1.5 Use of Asbestos Products

Materials and products required for manufacturing and installing elevators shall not contain asbestos.

2.2 MISCELLANEOUS MATERIALS

2.2.1 Materials for Car Enclosures

Materials for car enclosures shall meet flame spread rating 0 to 75 and smoke development 0 to 450 as tested in accordance with requirements of ASTM E 84 and as established by ASME A17.1, Rule 204.2.

2.2.2 Structural Steel

Structural steel shall be hot-rolled commercial quality carbon steel, pickled, oiled, complying with ASTM A 569/A 569M and ASTM A 568/A 568M.

2.2.3 Cold-Rolled Sheet Steel

Sheet steel shall be cold-rolled commercial quality low-carbon steel, Class 1, exposed matte finish, oiled, complying with ASTM A 366/A 366M and ASTM A 568/A 568M.

2.2.4 Stainless Steel

Stainless steel shall be ASTM A 176 Type 302/304, austenitic, corrosion-resistant with grain of belting in direction of longest dimension. Surfaces shall be smooth and without waves and shall be in compliance with ASTM A 666 and ASTM A 568/A 568M.

2.3 PASSENGER ELEVATOR CAR

2.3.1 Car Fronts

Fronts for passenger elevators shall be combination door post and return panels manufactured of 14 gauge stainless steel provided with necessary cutouts for operating devices. Operating panel shall be recessed into front return panel with surface-applied operating panel cover. Position indicator in front return shall be recessed with a surface-applied cover plate. Exposed stainless steel shall be finished with No. 4 Satin Finish, unless otherwise specified.

2.3.2 Car Doors

Car doors for passenger elevators shall be constructed from 16 gauge sheet steel and stainless steel cladding. Each door shall be sound-deadened and reinforced to receive required operating mechanism and hardware, and have two removable door guides per panel. Seams, screws or binding strips shall not be visible from within the car. Threshold shall be extruded aluminum with grooves for door guides. Exposed steel shall be finished with rust-inhibitive primer and baked-enamel in a color to be selected. Exposed stainless steel shall be finished with No. 4 Satin Finish. Car doors shall be equipped with a proximity-type infrared car door protective device having the following operation:

a. When doors are in full-open position, doors shall be unable to initiate closing if a person comes within the detection zone. The detection zone moves with the doors, so that if a person or object enters the zone after the doors have begun to close, the doors shall stop, then reverse to reopen. The doors shall reclose after a brief time. A passenger entering or leaving the cars shall not cause the doors to reopen unless the doors reach a predetermined proximity to the passenger.

b. After a stop is made, the doors shall remain open for a time to permit passenger transfer, after which they shall close automatically. This time interval shall be less for a car call than for a hall call or a coincident car/hall call.

c. If there is either a hall call anywhere in the group or a car call in the car in question and the doors are prevented from closing for a fixed time period, the door protective device shall be rendered inoperative, a buzzer shall sound in the car and the doors shall close at approximately half speed. Normal door operation shall resume at the next landing reached by the car.

2.3.3 Car Platform

Car platform for passenger elevators shall be fabricated from steel plates secured to a steel frame or plywood secured to a steel frame. Steel car platforms shall be assembled into a one-piece platform with top and bottom steel plates welded to structural steel frame and covered with felt and sound-isolation. Plywood car platform shall be 3/4 inch thick Exposure 1 plywood secured to structural steel frame with metal fire protection secured to underside of structural steel frame.

2.3.4 Walls

Walls for passenger elevators shall be 7 feet 11-1/2 inches high from floor to the underside of lighting fixtures. Side and rear panels shall be 16 gauge sheet steel panels faced with Rimex Pattern #6-OM satin stainless, as manufactured by Rimex Metals, or approved equal.

2.3.5 Car Top, Ceiling and Light Fixtures

Car top for passenger elevators shall be manufactured from 12 gauge sheet steel and shall be not less than 5-1/2 inches high with drop-ceiling and light fixtures. Ceiling shall be 1/8 inch thick translucent white plastic fire-retardant light diffuser supported by polished aluminum perimeter frame and dividers to form the drop-ceiling light fixture. Light fixtures shall be fluorescent type, flush with car ceiling, manufactured of sheet steel with flange and enclosed sides and top, baked-enamel reflector, mounted directly to outlet box. Bottom of fixtures shall be flush with car ceiling. Fluorescent light fixtures shall be dual lamp with quick-starting high-power factor, Class P ballasts, with safety lamp guard clamps on fluorescent tubes. Light level shall average at least 10 footcandles measured at the car threshold with the door closed. Part of car light fixture shall be removable to permit use of the emergency exit in top of car.

2.3.6 Emergency Exit

Car top for passenger elevators shall be manufactured with a hinged emergency exit panel of 12 gauge steel which opens up to clear the crosshead and car door operator. Emergency exit panel shall be hinged and held in place with nonremovable fastening devices at each corner, and manually openable from top of car and key-operable from inside. A minimum of 2 sides of exit panel shall lap the exit opening by 1 inch. Exits shall be equipped with electrical contacts which will prevent operation of car when exit door is open and cause the alarm bell to ring.

2.3.7 Floor Finish

Floor finish for passenger elevators shall be finished with resilient tile flooring not less than 3/16 inch thick or flexible-type homogeneous vinyl tile not less than 1/8 inch thick as specified in Section 09650 RESILIENT FLOORING. Tile shall be laid flush with the extruded aluminum platform threshold.

2.3.8 Base

Base for passenger elevators shall be cove type stainless steel, 6 inches high.

2.3.9 Handrails

Handrails for passenger elevators shall be mounted on each wall and shall comply with ASME A17.1, FED-STD 795 and 36 CFR 1191. For elevators with 2-speed horizontal-slide openings the handrails shall be turned back to wall.

2.3.10 Exhaust Fan

Exhaust fan for passenger elevators shall be 2-speed exhaust type ventilating unit mounted in car ceiling and shall be provided with a stainless steel grille. Units shall be suitably isolated from car ceiling and shall provide at top speed a minimum of 6 air changes per hour for car volume and car occupancy. Switches for the operation of exhaust unit shall be located in car station locked cabinet or key-switched.

2.3.11 Communications

A telephone system in stainless steel cabinet shall be provided for passenger elevators. A vandal-resistant speaker type intercom with push-button to activate shall be installed in car station behind a stainless steel perforated grille and connected to a programmable auto-dialer located in machine room. Auto-dialer shall be provided with a solid-state charger unit which will automatically provide emergency power and an immediate transfer in the event of failure of normal power supply. The push-button located in the car station or in separate cabinet shall be at the prescribed handicapped height and shall be identified as "Emergency Phone (Push to Activate)". The entire communication assembly shall be approved for an elevator installation. The telephone communication shall not be terminated until one of the communicating parties hangs up the receiver or manually disconnects the communications link.

2.3.12 Car Emergency Lighting System

Emergency car lighting system for passenger elevators shall consist of an emergency power pack on top of elevator and a remote lighting fixture inside elevator car located above car operating panel.

2.3.12.1 Power Pack

Power pack for car emergency lighting system shall be sealed lead-cadmium or nickel-cadmium 6-volt rechargeable batteries with solid-state controls and an integral regulating charger connected to normal power supply. Power pack unit shall contain the following:

a. Minimum 6 inch diameter alarm bell connected to the elevator alarm and emergency push-button.

b. Top of car light fixture with protective wire guard.

c. Testing circuit and pilot light.

d. Low-wattage pilot light indicator.

e. Battery low-voltage disconnect.

2.3.12.2 Emergency Light Fixture

Emergency light fixture for passenger elevators shall be located in car station inside elevator car, with flush-mounted lens and shall consist of the following:

a. A minimum of two lamps capable of providing a minimum level of illumination of 1.0 footcandle at a point 4 feet above the floor, 1 foot in front of car station.

b. Fixture frame of stainless steel.

c. Frosted acrylic lenses, 1/4 inch thick.

2.3.12.3 Remote Light Fixture

Upon interruption of normal power, remote light fixture for passenger elevators shall automatically and immediately illuminate and permit operation of the bell, subject to the activation of the emergency stop-switch or alarm button. Emergency power pack shall be capable of providing a minimum of 1 hour emergency bell operation and 4 hours of continuous illumination.

2.3.13 Protection Pads

Passenger elevator No. 1: Car shall be provided with wall protection pads, with inconspicuous stainless steel pad hooks spaced not over 18 inches apart near ceiling. Pads shall be heavy quality fire-retardant treated canvas with two layers of sewn cotton batting with metal eyelets for each pad hook. Pads shall cover the entire wall surface except operating devices.

2.3.14 Certificate Frame

A stainless steel certificate frame with translucent plexiglass lens of the appropriate size to receive certificate issued by inspecting agency shall be provided for passenger elevators. Frame shall be engraved to show name of elevator manufacturer, carrying capacity in pounds and maximum number of persons allowed.

2.3.15 Car and Counterweight Guides and Guide Shoes

Roller guides shall consist of minimum 3 tires mounted on top and bottom of car and counterweight frame. Roller guides shall be held in contact with guide rail by adjustable devices and shall run on dry, unlubricated rails.

2.3.16 Car Guide Rails

Guide rails for passenger elevator shall be planed steel tee or omega shaped sections with structural channel rail backing as required, tongue-and-groove matched joints reinforced with fitted splice plates. Guide rails shall extend from bottom of pit to underside of roof over hoistway.

2.4 PASSENGER ELEVATOR HOISTWAY ENTRANCES

2.4.1 Hoistway Doors

Hoistway doors for passenger elevators shall be designed and fabricated as part of a Class B 1-1/2 hour fire-rated door/frame assembly to meet requirements of NFPA 252 and shall bear the label of an approved testing laboratory. Door panels shall be hollow metal type with plain panel design, not less than 1-1/4 inches thick with 16 gauge face sheet-steel and stainless steel cladding with 16 gauge sight guards. Each door shall be reinforced with continuous vertical members and filled with sound-deadening material. Doors shall be reinforced to accept the required operating mechanism and hardware. Doors shall have 2 removable door guides per panel. Seams, binding strips or screws shall not be visible from landing. Exposed stainless steel shall be finished with No. 4 Satin Finish, unless otherwise specified.

2.4.2 Hoistway Frames

Hoistway frames for passenger elevators shall be designed and fabricated as part of a Class B 1-1/2 Hour fire-rated door/frame assembly to meet requirements of NFPA 252 and shall bear the label of an approved testing laboratory. Frames for passenger elevators shall be formed 14 gauge stainless steel cladding with head and jamb in flush alignment and corners welded and ground smooth. Head and jamb section shall be bolted assembly with bolts, washer and locking nut or lock washer. Frame assembly shall be securely fastened to structure. Frames shall return to wall. Combination buck and jamb frames may be provided with knockdown back flanges to permit installation in concrete walls. Exposed stainless steel shall be finished with No. 4 Satin Finish, unless otherwise specified.

2.4.3 Symbols

Raised stainless steel symbols as required by FED-STD 795 and 36 CFR 1191 of color selected, shall be provided for passenger elevators at each floor to indicate the floor location. Symbols shall be attached with concealed fasteners. Symbols shall be placed in a location which can be seen by passengers from the opened passenger doors.

2.4.4 Sills

Sills for passenger elevators shall be extruded aluminum with slip-resistant surface and machined grooves for door guides, secured to floor beams.

2.4.5 Strut Angles

Strut angles for passenger elevators shall be structural steel of size not

less than 3 x 3 x 3/16 inch extending from sill to beam above and anchored to building structure with structural steel fastenings and bracings of structural members with a cross section of not less than strut angles.

2.4.6 Door Hangers and Housing

Each door panel shall be provided with not less than 2 sheave-type hangers designed for required door operation. Hanger housing and support shall be fabricated from formed Z-shaped steel angles of size not less than 3/16 inch thick bolted to strut angles.

2.4.7 Door Rollers

Door rollers shall be constructed with grease-packed ball-bearings and shall be tired with a sound-reducing material. Diameter of rollers shall be not less than 3-1/4 inches for car doors and not less than 2-1/4 inches for hoistway doors. Upward thrust shall be taken by a hardened and ground ball-bearing roller assembled on an eccentric stud to provide adjustment.

2.4.8 Hanger Track

Hanger track shall be of high carbon cold-drawn steel, round at top to receive door rollers, and round at bottom to receive up-thrust rollers, of size engineered to accommodate load requirements.

2.4.9 Covers and Guards

Hanger covers, dust covers, toe guards, and fascia plate shall be fabricated from 16 gauge reinforced steel and finished with baked-enamel. Hanger covers shall extend the full door travel and shall be mounted in sections for ease of servicing door hangers. Dust covers shall be provided over top terminal landing door only and shall be secured to hanger housing and building structure. Toe guards shall be secured to sill. Fascia plates shall be provided between each door hanger housing and sill.

2.5 PASSENGER ELEVATOR DOOR OPERATION

Car and hoistway doors for passenger elevators shall be operated simultaneously by an electric door operator. Doors shall operate smoothly in the opening direction and closing direction and be electrically or hydraulically cushioned to stop at both the full-open and full-closed position. Operators shall be high speed direct current, heavy-duty type providing an average door opening speed of 2-1/2 feet per second. Car and hoistway doors shall be opened and closed simultaneously in a maximum time of 12 seconds. When on automatic operation the door closing time shall not exceed 4 seconds and door closing force shall not exceed 30 pounds. Reversal of the doors when closing shall be accomplished by the "DOOR OPEN" button, car door safety edge, or interception of the photoelectric light beams. Doors shall be arranged so that doors can be opened manually in the event of power failure.

2.6 PASSENGER ELEVATOR OPERATING AND SIGNAL FIXTURES

2.6.1 General

Elevator fixtures and panels for passenger elevators shall be constructed in swing return of stainless steel. Fastenings for all exposed fixtures shall be secured with tamper-proof spanner-head screws of same material and finish as fixture. Hall and car-call buttons shall be of the call register type with a low-voltage power supply not to exceed 48 volts. Pressure on a button shall illuminate button to indicate that a call in the desired direction has been registered. Car and hall fixtures shall be designed and located at the prescribed height to accommodate the handicapped in accordance with FED-STD 795 and 36 CFR 1191 for passenger elevators only. Handicapped markings shall be integral with faceplate in accordance with FED-STD 795 and 36 CFR 1191. Surface-applied markings are unacceptable. Engraving shall be black filled except for fire service identification which shall be red filled. Operating and signal fixture contacts and lamps shall be completely enclosed in steel boxes finished with baked-enamel. Boxes for hall landing devices shall be equipped for proper adjustment to wall. Lamps shall be installed in light-tight compartments. Cover plates shall be provided with rubber gaskets when exposed to weather or harmful contaminants. Replacement bulbs shall be readily available from 3 sources.

2.6.2 Car Operating Panel

Car operating panel for passenger elevators shall be provided with the necessary raised (0.03 inch) markings for the handicapped, and shall include a series of minimum 3/4 inch diameter or square push-buttons numbered to correspond to the floor served and various additional switches, buttons and light jewels, including emergency stop, alarm button, "DOOR OPEN" button and telephone. Operating buttons shall be vandal-resistant metal encased and embossed to permit illumination when a call is registered. Buttons shall be designed with 1/32 inch operating clearance to seat on faceplate in lieu of the button mechanism. Buttons shall have maximum protrusion of 3/16 inch beyond the faceplate and shall have beveled edges to prevent damage from side blows. Buttons and switches not required for automatic or fire service operation shall be key-operated and mounted on front-return car operating station. Elevator number and "NO SMOKING" shall be international symbol engraved on upper portion of car station. Operating panel in the car shall consist of a flush-mounted panel containing the following operating devices:

a. "DOOR OPEN" button.

b. "DOOR CLOSE" button.

c. Key-operated car fan/light switch.

d. Key-operated ventilating blower switch/call-light.

e. Communication device.

f. Emergency stop switch key-operated when operated will stop the car independently of normal stopping devices. Operation of emergency stop switch shall not cause any power variance or surge that may affect the operation or condition of the control panel or its components.

g. Emergency signal-switch connected to a 6 inch diameter signal bell outside of elevator hoistway at first floor located as shown or as directed.

h. Key-operated independent operation switch (for multi-car only).

i. Key-operated inspection switch which will render normal operation inoperative for the purpose of using the hoistway access switch.

j. Key-operated fire service switch and light jewel.

k. Key-operated hospital emergency switch.

2.6.3 Auxiliary Car Operating Panel

Auxiliary car operating panel for passenger elevators shall be similar in design to main car panel, and shall include all devices necessary for automatic operation, such as emergency stop switch, alarm bell, door open button, and call car buttons.

2.6.4 Hall-Call Station

Hall-call operating devices for passenger elevators at landing shall consist of an "UP" push-button at bottom landing, a "DOWN" push-button at top landing and "UP" and "DOWN" push-buttons at all other landings. Push-buttons shall be manufacturer's standard design, vandal-resistant, metal encased and back-lighted to permit illumination when a call is registered. Buttons shall be designed with 1/32 inch operating clearance to seat on faceplate in lieu of the button mechanism. Buttons shall have maximum protrusion of 3/16 inch beyond the faceplate with beveled edges to prevent damage from side blows.

2.6.4.1 Fire Service Switch

Fire service switch for passenger elevators shall be located at the designated landing.

2.6.5 Direction Lanterns

Lanterns for passenger elevators shall be in accordance with FED-STD 795 and 36 CFR 1191, and shall be provided at all floor landings and in each car entrance column. Lanterns shall be the vandal-resistant design.

2.6.6 In-Car Position Indicator

Indicator numerals and directional arrows for passenger elevators shall be flush-mounted faceplate with black-filled engraved numerals not less than 1 inch high and 3/8 inch diameter vandal-resistant light jewels directly beneath each number. As car travels through hoistway the car position shall be indicated by illumination of light jewel corresponding to landing at which the car is stopped or passing. Necessary light baffles shall be provided. Floor numerals and letters shall illuminate white. A position indicator of the digital-readout or dot-matrix type (minimum 2 inch high

indication) shall be provided in car transom panel. Number corresponding to car position shall remain illuminated when motor drive is shut down. Illumination shall be shrouded in an approved manner to protect against glare from car lighting.

2.6.7 Audible Signals

An audible signal shall be provided at each floor landing and in each car and shall sound coincident with the lantern illumination indicators. The audible signal shall be no less than 20 decibels with a frequency no higher than 1500 Hz. The audible signal shall sound once for UP direction and twice for DOWN direction.

2.6.8 Combination Hall-Position Indicator and Directional Arrows

Combination hall-position indicator and directional arrows for passenger elevators shall be provided at first floor landing directly over entrance frame. A digital-readout position and direction indicator (minimum 2 inch high indication) for passenger elevators shall be provided over first floor entrance. As elevator travels in hoistway, elevator position shall be indicated by illumination in alpha-numeric characters corresponding to the landing where elevator is stopped or passing. Number corresponding to position of car shall remain illuminated when the motor drive is shut down. An audible signal shall sound in the elevator car to indicate that the elevator car is stopping or passing a floor served by elevator. Fixture design and operation shall be similar in design to that specified for Car Position Indicator.

2.7 PASSENGER CAR OPERATION (SINGLE-CAR SELECTIVE/COLLECTIVE)

Passenger Elevator No. 1: Car shall be arranged so that by pressing one or more car buttons the car will start automatically and stop at first floor for which the button has been pressed corresponding to the direction in which the car is traveling. Car shall stop in the order in which floors are reached by car at all floors for which calls have been registered, irrespective of the sequence in which buttons have been pressed, provided the button for a given floor has been pressed sufficiently in advance of car's arrival at that floor to permit the stop to be made. If car buttons have not been pressed, and car starts UP in response to several DOWN calls, car shall travel to highest DOWN call first and then reverse to collect other UP calls. UP calls shall be collected in the same way when car starts DOWN in response to UP calls by first stopping for the lowest UP call registered. When a car has stopped in response to the pressing of a landing button and a car button is pressed corresponding to the direction in which the car has been traveling, within a predetermined interval of time after the stop, car shall continue in that direction regardless of other landing calls registered. While car is in motion, landing calls in the opposite direction of car movement shall not affect operation of car but calls shall remain registered. After the last car call in the direction the car is traveling has been answered the car shall automatically reverse and answer registered landing calls and all car calls in the order the landings are reached. When all calls have been answered, the car shall stop at the last floor served and shall have the doors closed.

2.7.1 Elevator Controller

Elevator controller shall utilize a microprocessor-based logic system in compliance with ASME A17.1. System shall provide comprehensive means to access the computer for elevator diagnostic purpose without need for any external devices and shall have permanent indicators to indicate important elevator statuses as an integral part of the controller. Failure of any single magnetically-operated switch, contact or relay to release in the intended manner; or the failure of any static control device, speed measuring circuit, or speed pattern generating circuit to operate as intended; or the occurrence of a single accidental ground or short circuit shall not permit the car to start or run if any hoistway door or gate interlock is unlocked or if any hoistway door or car door or cartop contact is not in the made position. While on cartop inspection or hoistway access operation, failure of any single magnetically-operated switch, contactor or relay to release in the intended manner; or the failure of any static-control device to operate as intended, or the occurrence of a single accidental ground shall not permit the car to move even with the hoistway door locks and car contacts in the closed or made position. Dedicated permanent status indicators shall be provided on the controller to indicate when the safety string is open, when the door locks are open, when the elevator is operating at high speed, when the elevator is on independent service, when the elevator is on fireman's service, when the elevator has failed to successfully complete its intended movement. In addition the means of displaying other special or error conditions that are detected by the microprocessor shall be provided.

2.7.2 Leveling

Leveling system shall utilize a device to establish incremental car position to an accuracy of 0.1875 inches or better using quadrature signal for the entire length of hoistway. Absolute floor number encoding with parity shall be provided at each floor in order to establish exact floor position to the computer. System shall not require movement to a terminal landing for the purpose of finding the correct car position. System shall utilize an automatic 2-way leveling device to control leveling of the car within 1/4 inch above or below landing sill. Over travel, under travel or rope stretch shall be compensated and car brought level to landing sill. Individual car controller shall be capable of learning the position of each floor in building to an accuracy of 0.1875 inches.

2.7.3 Car Controller

The individual car controller shall have software program that uses mathematical methods to create an idealized optimum velocity profile of car travel from any floor to any other floor providing a smooth and stepless elevator ride. System motion parameters such as jerk, acceleration, deceleration rates, etc., shall be field programmable with parametric limitations for the system dynamics and be capable of being stored as non-volatile memory. Drive-control system shall utilize the optimized velocity profile in a dual-loop feedback system based on car position and speed. A velocity feedback device shall permit continuous comparison of car speed with the calculated requirements. A solid-state motor control unit shall be provided for each elevator with electrical characteristics to

suit the power supply.

2.7.4 Switches

A switch with static control shall be provided on the governor of all elevators. Switch shall be set at no more than 90 percent of the tripping speed of the governor and shall be activated by overspeed in either direction of travel. Power feed lines to the brake shall be opened by an electromechanical switch and a single ground, or short circuit or solid-state control failure shall not prevent the application of the brake in the intended manner. Systems that do not apply the brake when the car stops at a landing are not acceptable. Isolation transformers or line inductors plus proper filtering shall be provided to eliminate both electrical and audible noise of silicone control rectifier (SCR) drives. A means shall be provided for removing regenerated power from the drive dc power supply. Power shall be dissipated in resistors or returned to the 3 phase ac power line. Failure of the system to remove the regenerated power shall cause drive output to be removed from the hoist motor. A contactor shall be used to disconnect the hoist motor from the output of the drive unit each time the elevator stops. Contactor shall be monitored and the elevator shall not start again if the contactor has not returned to the de-energized position when the elevator stops.

2.7.5 Troubleshooting

The microprocessor board shall be equipped with enhanced on-board diagnostics for ease of troubleshooting and field programmability of specific control variables. The microprocessor board shall provide the following minimum features:

a. On-board diagnostic switches and alphanumeric display. Switches and displays shall provide user-friendly interaction with the controller.

b. On-board real time clock. The real time clock shall display the time and date (field adjustable).

c. Display of calls on a per floor basis. All types of calls shall be conveniently entered and/or displayed using on-board switches and buttons.

d. Field programmability of specific timer values (i.e., door times, MG/Scr shutdown time, etc.). The value of these timers may be viewed and/or altered through use of the on-board switches and buttons.

e. Display of the status of all the inputs, outputs and internal control variables and flags listed in order of their English mnemonics.

f. The user shall be able to view and alter the security codes for security operations.

2.8 FREIGHT ELEVATOR CAR

Freight elevator car shall have plain steel panel sides to top of car, fabricated of not less than 12 gauge steel. Panels shall be not more than 36 inches wide. Top of car shall be not less than 14 gauge steel panels with a removable panel for emergency exit. Exit in top of car shall have an electric contact which will prevent operation of elevator when exit is in the open position. Top exit shall be provided with a latch-type lock operable from outside the elevator car and operable with a specially designed tool from within the car.

2.8.1 Car Platform

Car platforms for freight elevators shall be of steel construction with a finish floor of raised-pattern steel floor plate welded or bolted to platform framing members. Bolted platform shall be attached with countersunk flat head bolts. A steel subfloor will not be required if the raised-pattern steel floor plate is of a thickness which will accommodate the capacity of elevator and required type of loading.

2.8.2 Sling

Sling for freight elevator shall be designed for the proper class and loading capacity, constructed of structural or formed steel shapes welded or bolted together, consisting of double channel cross head and bolster with channel uprights, gusset plates and diagonal bracing. Sling shall be provided with Type A-instantaneous or Type B-gradual wedge clamp safety which is activated by an overspeed governor connected to the safety with a governor cable. Sling shall be connected to counterweight frame with steel hoist ropes which run over hoist machine traction sheave. Ropes shall be of a sufficient number to obtain the factor of safety required by ASME A17.1, complete with rope equalizers.

2.8.3 Bumper Guards

Bumper guards for freight elevators shall be fabricated of 6 x 2 inch thick oak mounted on rear and sides of elevator car, beveled back to side walls at entrance columns. Bottom edges of bumper guards shall be 6 inches and 30 inches above floor.

2.8.4 Light Fixtures

Lighting fixtures for freight elevators shall be recessed fluorescent type. Fixtures shall be manufactured of sheet steel with flange and enclosed sides and top, shall have a baked-enamel reflector, and shall be mounted directly to outlet box. Bottom of fixtures shall be flush with car ceiling. Fluorescent lighting fixtures shall be dual lamp with quick-starting high-power factor, Class P ballasts with safety lamp guard clamps on fluorescent tubes. Light level shall average at least 5 footcandles measured at car threshold with doors closed.

2.8.5 Car Emergency Lighting Fixture

A single unit consisting of a sealed-beam light source, battery and an integral-battery charger, relay and cord and plug connected to a

nonswitched standard grounding receptacle shall be provided for freight elevators near the location of the emergency lighting unit. Not less than two lamps of equal wattage shall be used to provide a minimum 1.0 footcandle of illumination at a point 4 feet above floor and 1 foot in front of main car operating device for a period of at least 4 hours.

2.8.6 Communications

A telephone system in stainless steel cabinet shall be provided for freight elevators. A vandal-resistant speaker type intercom with push-button to activate shall be installed in car station behind a stainless steel perforated grille and connected to a programmable auto-dialer located in machine room. Auto-dialer shall be provided with a solid-state charger unit which will automatically provide emergency power with an immediate transfer in the event of failure of the normal power supply. The telephone located in car station or in separate cabinet shall be located at the prescribed handicapped height and shall be identified as "Emergency Phone (Push-to-Activate)." The entire communication assembly shall be approved for an elevator installation. The telephone communication shall not be terminated until one of the communicating parties hangs up the receiver or manually disconnects the communications link.

2.8.7 Freight Signs

Identification signs for freight elevators shall be fabricated of stainless steel and engraved to show the elevator capacity, class of loading and passenger limitations in the format required by ASME A17.1.

2.8.8 Certificate Frame

A stainless steel certificate frame with translucent plexiglass lens shall be provided in the size to receive the certificate issued by the inspecting agency. Frame shall be engraved to show name of elevator manufacturer and carrying capacity in pounds.

2.8.9 Car and Counterweight Guide Shoes

Roller guides shall consist of minimum 3 tires mounted on top and bottom of car and counterweight frame. Roller guides shall be held in contact with guide rail by adjustable devices and shall run on dry, unlubricated rails.

2.8.10 Car Guide Rails

Guide rails for freight elevators shall be planed steel tee or omega shaped sections with structural channel rail backing as required and tongue-and-groove matched joints reinforced with fitted splice plates. Guide rails shall extend from bottom of pit to underside of roof over the hoistway.

2.9 FREIGHT ELEVATOR ENTRANCES

2.9.1 Hoistway Frames

Hoistway frames for freight elevators shall be designed and fabricated as

part of a Class B 1-1/2-hour fire-rated door/frame assembly to meet requirements of NFPA 252, and shall bear the label of an approved testing laboratory. For installation in gypsum board walls hoistway frames shall be 14 gauge carbon sheet-steel. Head and jamb section shall be bolted assembly with bolts, washer and locking nut or lock washer. Frame assembly shall be securely fastened to structure. Frames shall return to wall. For installation in concrete walls knock-down type hoistway frames may be used.

2.9.2 Hoistway Doors

Hoistway doors for freight elevators shall be designed and fabricated as part of a Class B 1-1/2-Hour fire-rated door/frame assembly to meet requirements of NFPA 252 and shall bear the label of an approved testing laboratory. Door panels shall be vertical bi-parting counterbalanced, power-operated which shall consist of 2 sections designed to balance each other and move simultaneously. Door panel construction shall be 12 gauge sheet steel with formed edges and vertical reinforcing back ribs spaced 18 inches on center. Each door shall be reinforced on the periphery with a frame of built-up steel angles or other suitable sections not less than 3/16 inch thick for mounting the necessary guide shoes and chain-suspension system. Door panels shall be securely bolted, riveted or welded into the door panel frames. Exposed steel shall be finished with rust-inhibitive primer and baked-enamel in a color to be selected, unless otherwise specified.

2.9.2.1 Upper Door Panel

Upper panel of each freight elevator hoistway door shall be equipped with a clear wire glass vision panel placed on side closer to car operating station. Vision panel shall be sized as required by ASME A17.1. Bottom edge of panel will be provided with a fire-resistant approved safety astragal which shall be nonshearing and noncrushing and will not damage foreign objects 3/4 inch or less when door is in the closed position. Rubber bumpers shall be provided on lower edge of panel near each jamb mounted to provide safety action specified. Rubber bumpers and safety astragals shall be designed for easy replacement.

2.9.2.2 Lower Door Panel

Lower panel of each freight elevator door shall be provided with a 1/2 inch thick steel toe guard beveled toward hoistway wall at a 60 degree angle to the horizontal. Upper edge of lower door panel shall be equipped with a truckable steel sill designed to be level with landing when doors are in the fully-open position. Truckable sills shall be of sufficient size and adequate strength to bridge the space between building sill and car platform and to support a trucking load equal to the rated capacity of elevator car. Truckable sill shall extend the full width of door opening and shall be supported by stationary adjustable stops fastened to each door guide rail. Shearing hazard shall not exist on bottom door panel during the door opening operation.

2.9.2.3 Door Guide Rails

Guide rails for freight elevator hoistway doors shall consist of suitable

structural shapes for each door section securely fastened to door frame and hoistway construction. Guide rails shall be designed and fabricated in accurate alignment so that door guide shoes will operate freely upon rails. Each door frame shall be equipped with four fixed or adjustable steel or malleable-iron grooved shoes of proper depth and vertical side contact on each side of rail. Shoes shall be attached to vertical structural door frame members and shall be spaced the maximum possible distance apart. Shoes shall be constructed to relieve door and guide shoe supporting members of all frictional contact with guide rails.

2.9.2.4 Door Interlocks

Hoistway doors for freight elevators shall be equipped with a tamper-proof interlock system which shall prevent operation of car until doors are locked in the closed position as defined by ASME A17.1. Interlocks shall lock the two door sections together to prevent doors from opening at corridor side unless car is at rest at landing or is traveling through the leveling zone or the hoistway access switch is used. Retiring cams for hoistway door interlocks shall be provided and securely fastened to supports on car enclosure.

2.9.2.5 Door Unlocking Device

Hoistway doors for freight elevators shall be complete with unlocking devices as described in ASME A17.1 and shall be provided at all floors. Parking device shall be located at a floor selected by Contracting Officer.

2.9.3 Car Gates

Car gates shall be provided at each freight elevator entrance to protect the entire width of opening to a height of 6 feet above sill. Car gates shall be heavy-duty vertical-sliding type constructed of minimum 10 gauge wire mesh or flat-expanded metal attached to steel angle frame with hardware and accessories as required. Car gates shall be equipped with weights for closing or balancing the gates. The guide shoes shall be designed to run on vertical tracks rigidly fastened to car enclosure. When fully raised the bottom edge of gates shall not protrude into clear opening of hoistway entrance. Lower edge of gate panel shall be equipped with a safety edge to stop the downward motion of gate when gates encounter an obstruction. Car gates shall be pass-type 2-speed power operated if there is insufficient clearance available when the elevator is at the top floor. Pass-type car gates shall be provided in conjunction with pass-type hoistway doors.

2.10 FREIGHT ELEVATOR DOOR AND CAR GATE OPERATION

Each hoistway door and car gate for freight elevators shall be equipped with an individual electric operator. Operators shall open and close car gate and hoistway doors at a panel speed of not less than one foot per second without slamming. Limit switches shall be provided to stop the motors as doors approach their limit of travel. Provisions shall be made for manual operation of the doors from inside the car in the event of power failure. Door operators shall be arranged to open doors automatically after the car enters the automatic leveling zone at the designated landing.

"Open" and "Close" operating buttons and any additional devices required shall be provided in car and at each hoistway entrance. Constant pressure on the "close button" shall close the door. Momentary pressure on the "open button" shall reopen the door provided the car is at a landing. Electric operators shall be of the highest quality and quiet in operation and shall be provided with all parts designed and constructed to meet the severe requirements of electrical service. Gates shall be provided with reversing edge and passenger sequence operation. Car doors shall be equipped with an infrared proximity-type car door protective device having the following operation:

a. When doors are in the full-open position, doors shall be unable to initiate closing if a passenger comes within the detection zone. The detection zone moves with doors, so that if a passenger or object enters the zone after doors have begun to close, doors shall stop and then reverse to reopen. Doors shall reclose after a brief time. A passenger entering or leaving car shall not cause doors to reopen unless doors reach a predetermined proximity to passenger.

b. After a stop is made, doors shall remain open for a time to permit passenger transfer after which the doors shall close automatically. This time interval shall be less for a car call than for a hall call or a coincident car/hall call.

c. If there is either a hall call anywhere in the group or a car call in the car in question and the doors are prevented from closing for a fixed period, the door protective device shall be rendered inoperative, a buzzer shall sound in the car and the doors shall close at approximately half speed. Normal door operation shall resume at the next landing reached by car.

2.11 FREIGHT ELEVATOR OPERATING AND SIGNAL FIXTURES

Operating and signal fixtures for freight elevators shall conform to the general requirements for passenger elevator operating and signal fixtures, with the exception that complying with FED-STD 795 and 36 CFR 1191 is not required.

2.11.1 Car Operating Panel

Operating panel in freight elevators shall consist of a recess-mounted panel near car gate containing the following operating devices:

a. Emergency stop switch (pull to activate), when operated, will stop the car independently of the normal operating devices and sounds the emergency signal bell.

b. Key-operated car light/fan switch.

c. Emergency signal button connected to a 6 inch diameter signal bell outside elevator hoistway at first floor.

d. Communication telephone.

e. Key-operated inspection switch which will render normal operating devices inoperative for purpose of using hoistway access switches.

f. Key-operated fire-service switch and light jewel.

g. Continuous pressure "DOOR CLOSE" button and momentary pressure "DOOR OPEN" push button for power-operated doors.

2.11.2 In-Car Position Indicator

In-car position indicator in freight elevators shall consist of engraved black-filled numerals not less than 1 inch high, and 3/8 inch diameter vandal-resistant light jewels directly beneath each number. As car travels through hoistway the car position shall be indicated by illumination of light jewel corresponding to landing at which the car is stopped or passing. Necessary light baffles shall be provided.

2.11.3 Car Push-Buttons

Car push-buttons in freight elevators shall be numbered to correspond to landings served. Faceplates shall be provided with raised indicators to the right of floor buttons. Buttons shall be encased with metal and embossed to permit illumination when a call is registered. Buttons for car and hall operating stations shall be designed to seat on faceplate in lieu of button mechanism with 1/32 inch operating clearance. Buttons shall have maximum protrusion of 3/16 inch beyond faceplate with beveled edges to prevent damage from side blows.

2.11.4 Hall-Call Station

Operating devices for freight elevators at each landing shall consist of a recess-mounted momentary pressure car call-button and continuous pressure "DOOR CLOSE" buttons.

2.11.4.1 "IN USE" Light

A red jewel "IN USE" light shall be illuminated when freight elevator is in motion and also when car is standing at any floor with hoistway door opened or car gate opened.

2.11.4.2 Fire Recall Key

Fire Recall key-switch for freight elevators shall be located at the designated landing faceplate.

2.11.4.3 Hoistway Access Switches

Hoistway access switches for freight elevators shall be located in lower and upper terminal floor hall stations.

2.12 FREIGHT ELEVATOR OPERATION

2.12.1 General

When freight elevators are not in use and the door-locking circuit is established, the momentary pressing of a landing call-button shall bring the car to that landing. Momentary pressing of a car dispatching button in car panel shall send the car to designated landing if car gate and hoistway doors are closed and the door-locking circuit is established.

2.12.2 Car Operation

Freight elevators shall operate as an automatic simplex selective/collective as described for passenger elevator. A nonstop button in car station shall be provided.

2.12.3 Service-Demand Bell

A service-demand bell shall be provided in freight elevator which will sound when a landing button is pressed while a door is in the open position.

2.12.4 Inspection and Maintenance Switch

An inspection and maintenance switch for freight elevator shall be mounted in car-control panel to disconnect the landing buttons. When the switch is closed the car may be operated by continuous pressure on UP and DOWN buttons on top of car which will operate the car at a reduced speed.

2.13 AUTOMATIC ELEVATOR OPERATION (FREIGHT ELEVATOR)

2.13.1 General

The operating device shall consist of a series of push-buttons in car numbered to correspond to various landings, "UP" and "DOWN" buttons at intermediate landings, and a single button at terminal landing. To meet the elevator operation requirements specified in this section, all buttons shall be connected electrically to the control system which governs the floor selection, car selection, direction of travel and governs the acceleration and retardation.

2.13.2 Operation

Car calls shall be registered within the car by pressing the button corresponding to the designated floors. Hall calls shall be registered by pressing buttons in the corridor push-button fixture. Once the demand for elevator service has been established and the car has received a start signal the car operation shall be as follows.

2.13.2.1 Door Closing

Doors shall close automatically. When doors are fully closed and the interlock circuit established, the car shall start to move in the direction established by control system. Car shall accelerate and decelerate automatically and stop at first floor for which a car button has been registered or at the first floor for a corridor demand which has been assigned to car. Car shall stop at all floors for which car calls are registered in the order in which the floors are reached and shall stop for

any corridor demands assigned to the cars in the order in which the floors are reached.

2.13.2.2 Door Opening

Doors shall open automatically as car reaches the landing. After a predetermined time the doors shall close and the car shall proceed to answer the remaining car or assigned corridor calls. A protective device such as a safety edge and light beam device shall be provided on car door and when activated will prevent closing of doors. Cars shall become available for assignment at whatever floor the last car demand has been satisfied in the direction in which car is traveling.

2.13.2.3 Car Dispatch

When car does not receive a demand dispatch at dispatching floor for an adjustable time period up to 10 minutes set initially at 5 minutes, the motor drive unit shall be switched off. If the car's switched-off motor drive unit receives a demand dispatch the motor drive unit shall automatically restart.

2.13.2.4 Door Dwell-Time

Door open dwell-times shall be adjustable so that the open time for a car call is shorter than the open time for corridor calls and second passengers. If a longer time is needed for passenger entry, doors can be prevented from closing or reversing by the light beam door control, the protective leading edge on car door, or by pressing "DOOR OPEN" button in car. Door dwell-times shall comply with FED-STD 795 and 36 CFR 1191.

2.13.3 Independent Service

Freight elevators shall be arranged for independent service operation with a key-switch located in the locked section of car operating panel. When the car key-switch is placed in the "ON" position the key-switch shall remove car from corridor button operation to permit operation from car-buttons only. Elevator direction lanterns shall be inoperative when elevator is in this mode of operation.

2.13.4 Automatic Load Weighing

Passenger elevators shall be provided with load-weighing devices which will cause elevator to bypass hall calls when elevator is filled to an adjustable percentage. Corridor calls shall remain registered until the next available car responds to the call.

2.13.5 Anti-Nuisance

Passenger elevators shall be provided with a system which will cancel all car calls in the event that between 3 and 5 times the number of car calls are registered as there are passengers in car, allowing 150 pounds per passenger.

2.13.6 Door Operation

Double-door operation shall not be permitted for passenger elevators. If an UP traveling car has a passenger for an intermediate floor and a DOWN call is registered at that floor with no-calls above car, the car shall travel to floor, open the door and let passenger out, then light the DOWN direction arrow in hall lantern and accept the waiting passenger who registered the DOWN call. Doors shall not perform the open-close cycle before elevator proceeds to next call.

2.13.7 Automatic Power Shutdown Upon Fire Sprinkler Activation

Elevator control system shall cause automatic power shutdown of the elevators in the event that a heat detector or sprinkler head located in the elevator machine room or in the elevator hoistway activates. Heat detector shall be fixed-temperature-rate-of-rise type, rated at 135 to 140 degrees F. Activation of a heat detector or a waterflow switch, which monitors only the sprinkler heads in the elevator machine room and in the hoistway, shall cause the following operations to the affected elevators:

a. Elevators which are in motion will proceed to the nearest available landing away from the fire floor, and shall cause power-operated doors to open and remain open. The fire floor is considered the floor where the fused sprinkler head or heat detector is located.

b. Elevators which are standing at a landing with open doors will remain open at the floor. If power-operated doors are closed, the elevator will cause the doors to open.

c. Power to the elevators will be automatically shutdown by operating the shunt-trip breaker(s) in main line power supply. Shutdown will occur only after the elevators are stopped at a landing, and power-operated doors are opened.

d. Automatic shutdown will override Phase I Emergency Recall Operations, ASME A17.1, Rules 211.3a and 211.3b, but will not override Phase II Emergency In-Car Operation, ASME A17.1, Rule 211.3c if Phase II operation is in effect.

2.14 HOSPITAL EMERGENCY SERVICE OPERATION

2.14.1 General

Provisions shall be made for calling elevators to any floor on an emergency basis which are operating independently from dispatch signals and landing call signals.

2.14.2 Key-Switches

Landing key-switch shall be spring-return momentary-contact type installed in floor landing push-button fixture box above push-buttons at all floors. Car hospital emergency key-switches shall be two-position ON-OFF type located in the upper section of car operating panel for elevator numbers 1. All key-switches shall be provided with an appropriately engraved

call-registered light jewel. Keys shall be removable in the off-position only. Landing key-switch and hospital emergency key-switch in car shall be keyed the same for all elevators in building and shall not be operable with any other key which will operate any other lock or device used for any other hospital purpose. Keys shall be provided for each type of cylinder furnished.

2.14.3 Operation of Assigned Elevator Response

When switch is activated at any floor the call-register light jewel at respective floor shall illuminate and the elevator group dispatching system shall immediately assign an elevator in group service with the shortest response time to hospital emergency call. Immediately upon assignment registered car calls within the respective elevator shall be canceled. Landing calls previously assigned to selected elevator shall be transferred to another elevator. If the assigned elevator is traveling away from the hospital emergency call the car shall slow down and stop at the nearest floor, and without opening the car doors, the car shall reverse direction and proceed nonstop to hospital emergency call floor. If the assigned elevator is traveling toward hospital emergency call floor, the car shall proceed to the assigned floor nonstop unless the car is slowing down for a stop, where the elevator shall stop without opening car doors and immediately start toward the hospital emergency call floor. Should all cars be unavailable to respond to the landing call the register light shall not illuminate. Upon arrival at hospital emergency floor the elevator shall remain with doors open for an adjustable dwell-time interval in the range of 10 to 60 seconds initially set at 30 seconds. After this interval has expired the car shall automatically return to normal service if the car has not been placed on hospital emergency operation from within the car. Any elevator selected to respond to a hospital emergency call shall be removed from group service and shall not accept additional calls, emergency or otherwise, until the car has completed the total hospital emergency function. Any car operating in group service may be selected. Additional hospital emergency calls that are registered in the system shall cause additional cars to respond as described above, always on the basis of one hospital emergency call per car.

2.14.4 In-Car Operation

Activation of the in-car hospital emergency key-switch shall override dwell-time and permit the assigned elevator to accept a car call for any floor, automatically close the doors and proceed nonstop to the selected floor. Elevator shall remain disconnected from group hall-button riser during this operation. The return of key-switch to normal position shall extinguish the call-register light and restore elevator to normal service.

2.14.5 Signals

Top section of each car operating panel and in the center of rear cab panel (approximately 6 feet 0 inches above floor) the backlighted "HOSPITAL EMERGENCY" indicators shall be provided to flash on-and-off continuously when car is assigned to this operation until restored to normal service. "HOSPITAL EMERGENCY" indications shall be a photographic negative type with l/4 inch high letters which are legible only when illuminated.

2.14.6 Graphics

Exposed position of each switch faceplate shall have legible indelible legends engraved or etched to indicate its identity and positions. All letters in faceplate shall be not less than l/4 inch high and filled with black or red paint.

2.15 FIREFIGHTERS' SERVICE

Firefighter service shall be in accordance with ASME A17.1 for automatic elevators. Elevator lobby and machine room smoke detectors shall be spot-type smoke detectors. Smoke detectors shall be powered from the building fire alarm control panel. Elevator lobby and machine room smoke detectors shall be in accordance with Section 13851 FIRE DETECTION AND ALARM SYSTEM, ADDRESSABLE.

2.16 ELEVATOR MACHINE (GEARED)

2.16.1 Hoisting Machine

Machine shall be worm-geared traction type with motor, brake, worm gearing, traction sheave and bearings mounted on common bed plate. Worm shall be of steel and integral with the worm shaft and shall be provided with a ball-thrust bearing with self-alignment blocks or preloaded thrust bearing designed to take the end thrust of the worm in both directions. Main gear shall be hobbed from a bronze rim accurately fitted and bolted to gear spider. Gears shall be fitted to minimize the noise, vibration and wear. Roller bearings shall be complete with drive sheave shaft and provisions for lubrication. Design and construction of equipment and parts subject to wear shall be completely repairable and replaceable.

2.16.2 Hoisting Ropes

Hoisting ropes shall be the independent wire-rope type, regular lay, preformed, non-coated, improved plow steel of 6 x 37 construction. Hoisting ropes shall be suited for service requirements to be provided. Hoisting rope connections shall be by tapered babbitted socket connections and shall be rated in strength equal to or greater than the strength rating of the rope. Hoisting ropes shall be selected so that the rated capacity load plus the load block weight divided by the number of parts of rope will not exceed 20 percent of certified breaking strength of rope. Hoisting ropes shall be secured to the hoist drum so that no less than two wraps of rope remain at each anchorage of hoist drum at extreme low position.

2.16.3 Sheaves

Drive sheave shall be steel or semi-steel finished with grooves to receive hoist ropes and shall give maximum traction and minimum wear. Grooved nonmetallic inserts on drive sheave may be provided at Contractor's option. Deflector and overhead sheaves, suitable sheet metal guards with required service openings, sheave beams and supports shall be provided as required.

2.16.4 Hoist Motor (Geared)

Motor shall be a geared type, designed for elevator service to develop the required high-starting torque with low-starting current in accordance with NEMA MG 1. Motor shall be designed to meet requirements of elevator service and be capable of starting cold and carrying the full-rated load in car for a period of 1 hour of continuous UP and DOWN runs, stopping at all floors and standing not more than 10 seconds at each floor without overheating. Speed regulation of the car, with full-rated load shall not exceed plus or minus 5 percent of average on a round trip.

2.16.5 Armature

Armature shall be electrically balanced and the armature and brake drum shall be mechanically balanced as a unit. Field coils shall be spool or form wound. Windings in both armature and field shall permit easy removal.

2.16.6 Commutator

Commutator and brushes shall be of sufficient size, area and designed to perform under full-load with sparks barely visible and without overheating. Brushes shall have individual tension adjustment with provisions for adjusting and positively locking the brush holder in place as a unit.

2.16.7 Brake Assembly

Brake shall be spring-applied, electrically released and designed for automatic application in the event of interruption of power supply. Brake drum shall have a wearing surface and edge of flange turned smooth and wearing surface shall run within a maximum variation of 0.005 inches. Brake shoes shall be lined with a fireproof friction material shaped to shoes so that the drum will run free with normal clearance. Brake springs shall be helical and operated in compression and shall apply the brake when released by the magnet. Brake magnet shall be designed to release quickly. The brake application shall be automatically controlled by magnetic retardation to obtain noiseless, smooth and gradual stops under all loading conditions. Release magnet coil circuit shall be opened by the various safety devices, power failure, failure of equipment to function in the proper manner for safe operation of car and upon normal stopping of the car.

2.16.8 Bed Plate

Bed plate shall be cast iron or steel in one piece with stiffening ribs to accurately maintain alignment of parts or be heavy rigid structural steel shapes securely welded together. Pads accurately planed or milled shall be provided as seats for parts secured to bed plate.

2.17 SOUND AND VIBRATION ISOLATION

Sound and vibration isolating foundation shall effectively prevent the transmission of machine vibration and sound to building structure. Location and deflection characteristics of isolation units shall produce a uniform and nonexcessive loading on units under all operating conditions.

2.18 VARIABLE VOLTAGE CONTROL

2.18.1 Performance

Control system shall govern the starting, stopping and direction of travel of elevator and provide the operation specified. Control shall be accomplished by an individual generator or solid-state motor control for each elevator where the voltage applied to hoist motor is variable. Control equipment shall be of type suitable for motors and type of operation specified to provide smooth acceleration from stop to full speed, deceleration and landing stops under any load condition from no load to full-rated load. Maximum time from start of car motion to floor level at the next floor for geared machines shall be 12 seconds for a speed of 350 feet per minute. Time from door close to start of car motion shall not exceed 0.7 second with a balanced load. Cycle time, which is the time from start of door close to door fully open at the next typical floor, 12 seconds for geared elevators with a speed of 350 feet per minute. Prior to the termination of maintenance period included in the Base Contract, elevators shall be readjusted as required to meet performance requirements. All performance times specified in this section are based on 12 feet 0 inches floor height, and 3 feet 4 inches wide center-opening doors.

2.18.2 Controller

Electric controller shall be microprocessor-based logic type with battery backup system with charger and charge time for a depleted battery, battery reserve and a low-voltage disconnect. Components required for proper performance of elevator shall be neatly mounted and wired and completely enclosed in a cabinet with a mechanically-latched door.

2.18.3 Solid-State Motor-Control

A solid-state motor-control unit shall be provided for each elevator, with electrical characteristics suitable to the available distribution system. The system shall consist of necessary 3-phase, full-wave bridge rectifiers or other devices and shall be full regenerative. A Transient Voltage Surge Suppressor (TVSS) device shall be provided to protect the solid-state motor-control unit and other electronic equipment in the facility. Solid-State control unit shall have the capacity to handle peak currents and shall contain a balanced and coordinated fault-protection system to protect the unit as follows:

a. Protection system shall protect complete power circuit (specifically the power semi-conductors) from failure under short circuit conditions.

b. Protection system shall protect unit from faults arising from partial grounds, partial shorts in motor armature, or in power unit.

c. Protection system shall protect drive motor against sustained overloads using a solid-state overload circuit.

d. Protection system shall protect motor and power unit against instantaneous peak overload.

e. Protection system shall protect phase sequence to ensure incoming line is phased properly.

f. Protection system shall protect unit against instantaneous overcurrent.

g. Protection system shall protect unit against low power line voltage (less than 75 percent of nominal).

h. Protection system shall protect unit against blown ac input fuse and blown dc converter output fuses.

i. Protection system shall protect against excessive converter output voltage and excessive open-circuit voltage, and heat dissipation device.

j. The Transient Voltage Surge Suppressor (TVSS) device used to protect the solid-state motor-control unit shall be listed by UL 1449 and tested by manufacturer to meet requirements of IEEE C62.11, IEEE C62.41 and IEEE C62.45 Categories A, B and C. The system shall be connected in parallel with the protected system; series-connected elements which could constitute a single-point failure shall not be used. The protection modes for the TVSS device shall have as a minimum line-to-ground, neutral-to-ground, line-to-neutral and Delta Systems line-to-line. The TVSS surge current capacity, based on an 8 x 20 micro-second waveform, shall be a minimum of 75K amps per phase. The maximum UL 1449 clamping voltage for each protection mode shall not exceed 800 volts for 208, 240 and 277/480 volt system. The TVSS system shall provide a joule rating that meets or exceeds the requirements of IEEE C62.41 Category C delivery capability. The TVSS system shall provide a noise-attenuation of 40 db for electrical line noise. The TVSS system shall be a symmetrically balanced metal oxide varistor (MOV) array system, constructed with surge current diversion modules each capable of withstanding 25 KVA surge current based on standard 8 x 20 micro-second waveform. Each module shall be capable of withstanding over 1000 pulses of 10K amps in accordance with IEEE C62.41 Category C surge current without degradation of clamping voltage. The module shall consist of multiple gapless metal oxide varistor individually fused. Gas tubes or silicon avalanche shall not be used. When module performance is degraded, as if one or more fuses or varistors have failed, a light emitting diode (LED) indicator shall indicate a failed module.

2.18.3.1 Fault Conditions

Occurrence of any of the above fault conditions shall result in the immediate removal of the drive's run command, the clamping of the internal current regulator, the opening of armature loop and an emergency dynamic brake stop. Drive system shall also notify the car controller of shutdown via a drive status signal. Car controller shall respond to continuous-drive reset pulses which shall reset the drive as soon as fault condition clears, if it is not a hard failure such as blow fuse, and shall

return elevator to service. The dc direct-drive system shall be designed to include input impedance to filter out electro-mechanical noise on SCR drive system.

2.19 SENSOR AND CONTROL WIRING SURGE PROTECTION

Digital and analog inputs shall be protected against surges induced on control and sensor wiring. Digital and analog outputs shall be protected, as shown against surges induced on control and sensor wiring installed outdoors. Fuses shall not be used for surge protection. The inputs and outputs shall be tested in both normal mode and common mode using the following two waveforms:

a. A 10 microsecond rise time by 1000 microsecond pulse width waveform with a peak voltage of 1500 volts and a peak current of 60 amperes.

b. An eight microsecond rise time by 20 microsecond pulse width waveform with a peak voltage of 1000 volts and a peak current of 500 amperes.

2.20 COMMUNICATIONS LINKS SURGE PROTECTION

Communications equipment shall be protected against surges induced on any communications link. Cables and conductors, except fiber optics, which serve as communications links from motor control room (MCR) to field equipment, and between field equipments shall have surge protection circuits installed at each end. Protection shall be furnished at equipment and additional triple electrode gas surge protectors rated for the application on each wireline circuit shall be installed within 3 feet of the building cable entrance. Fuses shall not be used for surge protection. The inputs and outputs shall be tested in both normal mode and common mode using the following two waveforms:

a. A 10 microsecond rise time by 1000 microsecond pulse width waveform with a peak voltage of 1500 volts and a peak current of 60 amperes.

b. An eight microsecond rise time by 20 microsecond pulse width waveform with a peak voltage of 1000 volts and a peak current of 500 amperes.

2.21 COMMUNICATIONS LINKS OVER VOLTAGE PROTECTION

Communications equipment such as MODEMs, line drivers, and repeaters shall be protected against overvoltage on communications link conductors. Cables and conductors, which serve as communications links, except fiber optics, shall have overvoltage protection for voltages up to 480 Vac rms, 60 Hz installed. Instrument fuses or fusible resistors are required for this application.

2.22 COUNTERWEIGHT

Counterweight for each car shall equal the weight of car plus approximately

40 percent of specified load. Concrete weights are not acceptable. Counterweight safeties shall be provided. Counterweight screen of metal construction, at least 6 feet high, shall be provided as a protective guard at bottom of hoistway, except where the type of hoisting rope compensation prevents this type of installation.

2.23 LEVELING DEVICES

Elevators shall be equipped with a 2-way leveling device to automatically bring the car to the floor landings. Car shall automatically relevel at each landing to correct overtravel and undertravel, and maintain the level regardless of load on the car, rope slippage or stretch of cables. Electric stopping system shall be arranged so the car will stop level with the floor before brake is set. Stopping accuracy shall not exceed plus or minus 1/4 inch.

2.24 BUFFERS

Buffers shall be of design suitable for depth of pit. Buffer anchorage at pit floors shall be provided for each car and counterweight and arranged to avoid puncturing of the pit waterproofing. Type of buffer used shall be tested and approved for compliance with elevator service requirements. Pipe struts and steadiers shall be provided as required by pit conditions. A metal plate with information concerning stroke and load-rating shall be permanently fastened to each buffer. Pit-mounted buffers shall have an adequate stroke designed to bring the fully-loaded car and counterweight to rest from governor tripping speed at an average rate of retardation not exceeding gravity. Moving portion of buffer shall be designed to be accelerated by the car without a noticeable peak retardation.

2.25 LUBRICATION POINTS

Every part subject to movement friction shall be complete with provisions for oil and grease lubrication.

2.26 SEISMIC REQUIREMENTS

Seismic protection shall be provided to conform to ASME A17.1, Rule XXIV.

PART 3 EXECUTION

3.1 INSTALLATION

Elevators and equipment shall be installed in accordance with ASME A17.1 and manufacturer's recommendation. Guide rails shall be set plumb and parallel and attached to guide rail brackets secured to building framing as indicated or as required by code. Steel plate shims shall not be used for aligning equipment. Guide rail sections shall be joined rail sections, joined together in accordance with ASME A17.1. Guide rails shall be thoroughly cleaned and made smooth before elevator is put into operation. During installation stainless steel surfaces shall be protected.

3.2 FIELD WELDING

When structural or load-bearing members are to be field-welded, welding and qualification of welders shall be as specified in Section 05055 WELDING, STRUCTURAL.

3.3 ELEVATOR WIRING

Wiring shall be provided for electrically-operated items of elevator equipment to comply with requirements of NFPA 70 and Section 16415 ELECTRICAL WORK, INTERIOR. For control and signal circuits wire shall be minimum No. 16 AWG. For power and lighting circuits wire shall be minimum No. 12 AWG. A work light fixture equipped with 150 watt incandescent lamps and ground duplex receptacles shall be provided at both the top and bottom of the car. Work light fixtures and traveling cable junction boxes shall be located to provide illumination at junction boxes. Wiring shall terminate in junction boxes. Wires shall be identified and match symbols shown on wiring diagrams. Control and signal wires shall be brought to accessible numbered terminal blocks on controller. Intra-panel wiring shall be flame-resisting type.

3.3.1 Traveling Cables

Cables shall terminate at numbered terminal blocks in car and machine room. Traveling cable shall be provided with a separate shielded circuit for communication system and hang to obtain proper size of loop. Traveling cable shall be provided with 10 percent spare conductors for each car.

3.4 PAINTING

Except for factory finished items and corrosion-resistant items, machined surfaces shall be painted as specified in Section 09900, PAINTING, GENERAL.

3.5 TESTING

Testing shall be in accordance with requirements of ASME A17.1 and ASME A17.2.1 and as specified below. Contractor shall conduct a complete test of the system. After the system has passed all tests, the Contractor shall notify the Contracting Officer in writing, 10 days prior to the time of performing the acceptance test, that the system is complete and is ready for final acceptance testing. The Contractor after receiving written approval from the Contracting Officer will conduct a complete acceptance test of the system. The Contractor shall provide the services of an elevator inspector, employed by an independent testing company to inspect the elevators, witness the acceptance testing and certify the elevators. The inspector shall meet all qualification requirements of ASME QEI-1 and shall be certified in accordance with ASME QEI-1. The Contractor shall provide an elevator certificate signed by the inspector for each elevator. The certificate shall be provided to the Contracting Officer within 30 days after completion of all testing.

3.5.1 Testing Period

Each elevator shall be tested with the specified rated-load in car continuously for a period of 35 percent of the duty time. During the test run the car shall be stopped at all floors in both directions of travel for

a standing period of 10 seconds per floor. A manual test of the final limits (UP and DOWN overtravel) shall also be performed.

3.5.2 Speed Load Testing

The actual speed of elevator car in both directions of travel shall be determined with the rated-load and with no-load in the elevator car. Actual measured speed of car with the rated-load in the UP direction shall be within 5 percent of rated speed. The maximum difference in actual measured speeds obtained under the various conditions outlined shall not exceed 10 percent of the total difference between the UP and DOWN speeds.

3.5.3 Car Leveling Testing

Elevator cars leveling devices shall be tested for accuracy of landing at all floors with no-load in car, with symmetrical load in car and with the rated-load in car in both directions of travel.

3.5.4 Brake Testing

Brake test shall be conducted with the rated-load in the car. Brakes shall stop and hold the car with the rated-load. In elevators using a Ward-Leonard type generator drive system it is critical to test the suicide circuit to assure that loop currents cannot cause the hoist motor to pull through the brakes.

3.5.5 Temperature Rise Testing

Temperature rise of hoistway motor, motor drive, exciter and booster shall be conducted during the full-load test run for minimum one hour. Under these conditions the temperature rise of equipment shall not exceed the requirements established in NEMA MG 1 Chapter 12. Temperature rise testing shall be started when all parts of equipment are within the temperature required by NEMA at the time of starting the tests.

3.5.6 Insulation-Resistance Testing

Insulation-resistance testing shall be performed to ensure that the complete elevator wiring systems will be free from short circuits and grounds. Electrical conductors shall have an insulation-resistance of not less than one megohm between each conductor and ground, and not less than one megohm between each conductor and all other conductors. Prior to testing, provisions shall be made to prevent damage to electronic devices.

3.6 FRAMED INSTRUCTIONS

Two sets of instructions shall be typed and framed under glass or in laminated plastic, and posted side-by-side in the elevator room where directed, before acceptance of elevator systems. First set of instructions shall include wiring and control diagrams showing the complete layout of elevator system. Second set of instruction shall include the condensed operating instructions explaining preventive maintenance procedures, the methods for checking the elevator system for normal safe operation, and the procedures for safely starting and stopping the elevator system.

3.7 OPERATOR TRAINING

Contractor shall conduct a formal training course for operating Government personnel which shall include care, lubrication, adjustment and maintenance of the elevator equipment. Training period of the elevator equipment. Training period shall consist of a total of 8 hours of normal working time and shall start after the system is functionally completed but prior to final acceptance tests. Field instructions shall cover all of the items contained in the operating and maintenance instructions, including demonstrations of routine maintenance operations. The Contracting Officer shall be notified at least 14 days prior to date of starting the training course.

-- End of Section --

SECTION 15080

THERMAL INSULATION FOR MECHANICAL SYSTEMS

PART 1 GENERAL

1.1 REFERENCES

The publications listed below form a part of this specification to the extent referenced. The publications are referred to in the text by basic designation only. At the discretion of the government, the manufacturer of any material supplied will be required to furnish test reports pertaining to any of the tests necessary to assure compliance with the standard or standards referenced in this specification.

AMERICAN SOCIETY FOR TESTING AND MATERIALS (ASTM)

ASTM A 167	(1996) Stainless and Heat-Resisting Chromium-Nickel Steel Plate, Sheet, and Strip
ASTM A 580/A 580M	(1995a) Stainless and Steel Wire
ASTM B 209	(1996) Aluminum and Aluminum-Alloy Sheet and Plate
ASTM C 195	(1995) Mineral Fiber Thermal Insulating Cement
ASTM C 449/C 449M	(1995) Mineral Fiber Hydraulic-Setting Thermal Insulating and Finishing Cement
ASTM C 533	(1995) Calcium Silicate Block and Pipe Thermal Insulation
ASTM C 534	(1994) Preformed Flexible Elastomeric Cellular Thermal Insulation in Sheet and Tubular Form
ASTM C 547	(1995) Mineral Fiber Pipe Insulation
ASTM C 552	(1991) Cellular Glass Thermal Insulation
ASTM C 553	(1992) Mineral Fiber Blanket Thermal Insulation for Commercial and Industrial Applications
ASTM C 612	(1993) Mineral Fiber Block and Board Thermal Insulation

ASTM C 647	(1995) Properties and Tests of Mastics and Coating Finishes for Thermal Insulation
ASTM C 795	(1992) Thermal Insulation for Use in Contact With Austenitic Stainless Steel
ASTM C 871	(1995) Chemical Analysis of Thermal Insulation Materials for Leachable Chloride, Fluoride, Silicate, and Sodium Ions
ASTM C 916	(1985; Rev 1996) Adhesives for Duct Thermal Insulation
ASTM C 920	(1995) Elastomeric Joint Sealants
ASTM C 921	(1989 R; 1996) Determining the Properties of Jacketing Materials for Thermal Insulation
ASTM C 1126	(1996) Specification for Faced or Unfaced Rigid Cellular Phenolic Thermal Insulation
ASTM D 3278	(1996) Test Methods for Flash Point of Liquids by Small Scale & Closed-Cup Apparatus
ASTM E 84	(1996a) Surface Burning Characteristics of Building Materials
ASTM E 96	(1995) Water Vapor Transmission of Materials

MANUFACTURERS STANDARDIZATION SOCIETY OF THE VALVE AND FITTINGS INDUSTRY (MSS)

MSS SP-69	(1996) Pipe Hangers and Supports - Selection and Application

MIDWEST INSULATION CONTRACTORS ASSOCIATION (MICA)

MICA-01	(1993) National Commercial & Industrial Insulation Standards

1.2 SYSTEM DESCRIPTION

Field-applied insulation and accessories on mechanical and plumbing systems shall be as specified herein; factory-applied insulation is specified under the piping, duct or equipment to be insulated. Field applied insulation materials required for use on Government-furnished items as listed in the SPECIAL CONTRACT REQUIREMENTS shall be furnished and installed by the Contractor.

1.3 GENERAL QUALITY CONTROL

1.3.1 Standard Products

Materials shall be the standard products of manufacturers regularly engaged in the manufacture of such products and shall essentially duplicate items that have been in satisfactory use for at least 2 years prior to bid opening.

1.3.2 Installer's Qualifications

Qualified installers shall have successfully completed three or more similar type jobs within the last 5 years.

1.3.3 Surface Burning Characteristics

Unless otherwise specified, insulation not covered with a jacket shall have a flame spread rating no higher than 75 and a smoke developed rating no higher than 150. The outside surface of insulation systems which are located in air plenums, in ceiling spaces, and in attic spaces shall have a flame spread rating no higher than 25 and a smoke developed rating no higher than 50. Insulation materials located exterior to the building perimeter are not required to be fire-rated. Flame spread and smoke developed ratings shall be determined by ASTM E 84. Insulation shall be tested in the same density and installed thickness as the material to be used in the actual construction. Jackets shall comply with the flame spread and smoke developed ratings of 25/50 as determined by ASTM E 84.

1.3.4 Identification of Materials

Packages or standard containers of insulation, jacket material, cements, adhesives, and coatings delivered for use, and samples required for approval shall have manufacturer's stamp or label attached giving the name of the manufacturer and brand, and a description of the material.

1.4 SUBMITTALS

Government approval is required for submittals with a "GA" designation; submittals having an "FIO" designation are for information only. The following shall be submitted in accordance with Section 01330 SUBMITTAL PROCEDURES:

SD-14 Samples

Thermal Insulation Materials; GA.

A complete list of materials, including manufacturer's descriptive technical literature, performance data, catalog cuts, and installation instructions. The product number, k-value, thickness and furnished accessories for each mechanical system requiring insulation shall be included. Materials furnished under this section of the specification shall be submitted at one time.

After approval of materials and prior to applying insulation a booklet shall be prepared and submitted for approval. The booklet shall contain

marked-up MICA-01 plates (or detail drawings showing the insulation material and insulating system) for each pipe, duct, or piece of equipment required to be insulated per this specification. The MICA plates shall be marked up showing the materials to be installed in accordance with the requirements of this specification for the specific insulation application. The Contractor shall submit all MICA Plates required to show the entire insulating system, including Plates required to show insulation penetrations, vessel bottom and top heads, legs, and skirt insulation as applicable. If the Contractor elects to submit detailed drawings instead of marked-up MICA Plates, the detail drawings shall show cut-away, section views, and details indicating each component of the insulation system and showing provisions for insulating jacketing, and sealing portions of the equipment. For each type of insulation installation on the drawings, provide a label which identifies each component in the installation (i.e., the duct, insulation, adhesive, vapor retarder, jacketing, tape, mechanical fasteners, etc.) Indicate insulation by type and manufacturer. Three copies of the booklet shall be submitted at the jobsite to the Contracting Officer. One copy of the approved booklet shall remain with the insulation Contractor's display sample and two copies shall be provided for Government use.

After approval of materials actual sections of installed systems properly insulated in accordance with the specification requirements shall be displayed. Such actual sections must remain accessible to inspection throughout the job and will be reviewed from time to time for controlling the quality of the work throughout the construction site. Each material used shall be identified, by indicating on an attached sheet the specification requirement for the material and the material by each manufacturer intended to meet the requirement. Display sample sections will be inspected at the jobsite by the Contracting Officer. Approved display sample sections shall remain on display at the jobsite during the construction period. Upon completion of construction, the display sample sections will be closed and sealed.

Pipe Insulation Display Sections: Display sample sections shall include as a minimum an elbow or tee, a valve, dielectric unions and flanges, a hanger with protection shield and insulation insert, or dowel as required, at support point, method of fastening and sealing insulation at longitudinal lap, circumferential lap, butt joints at fittings and on pipe runs, and terminating points for each type of pipe insulation used on the job, and for hot pipelines and cold pipelines, both interior and exterior, even when the same type of insulation is used for these services.

Duct Insulation Display Sections: Display sample sections for rigid and flexible duct insulation used on the job. A display section for duct insulation exposed to weather shall be protected by enclosing with a temporary covering.

1.5 STORAGE

Materials shall be delivered in the manufacturer's unopened containers. Materials delivered and placed in storage shall be provided with protection from weather, humidity, dirt, dust and other contaminants. Insulation material and supplies that become dirty, dusty, wet, or otherwise

contaminated may be rejected by the Contracting Officer.

PART 2 PRODUCTS

2.1 GENERAL MATERIALS

Materials shall be compatible and shall not contribute to corrosion, soften, or otherwise attack surfaces to which applied in either the wet or dry state. Materials to be used on stainless steel surfaces shall meet ASTM C 795 requirements. Materials shall be asbestos free and conform to the following:

2.1.1 Adhesives

2.1.1.1 Acoustical Lining Insulation Adhesive

Insulation shall be applied in cut-to-size pieces attached to the interior of the duct with a nonflammable, fire-resistant adhesive conforming to ASTM C 916, Type I. Exposed edges of the liner at the duct ends and at other joints where the lining will be subject to erosion shall be coated with a heavy brush coat of the nonflammable, fire-resistant adhesive to prevent delamination of glass fibers.

2.1.1.2 Mineral Fiber Insulation Cement

Cement shall be in accordance with ASTM C 195.

2.1.1.3 Lagging Adhesive

Lagging adhesives shall be nonflammable and fire-resistant and shall have flame spread and smoke developed ratings of 25/50 when measured in accordance with ASTM E 84. Adhesives shall be either the Class 1 or Class 2 type as defined below. Class 1 adhesive shall be pigmented white and be suitable for bonding fibrous glass cloth to faced and unfaced fibrous glass insulation board; for bonding cotton brattice cloth to faced and unfaced fibrous glass insulation board; for sealing edges of and bounding fibrous glass tape to joints of fibrous glass board; or for bonding lagging cloth to thermal insulation. Class 2 adhesive shall be pigmented white and be suitable for attaching fibrous glass insulation to metal surfaces. Lagging adhesives shall be applied in strict accordance with the manufacturer's recommendations.

2.1.2 Contact Adhesive

Adhesive may be dispersed in a nonhalogenated organic solvent with a low flash point (flash point less than minus 25 degrees F when tested in accordance with ASTM D 3278) or, dispersed in a nonflammable organic solvent which shall not have a fire point below 200 degrees F. The adhesive shall not adversely affect, initially or in service, the insulation to which it is applied, nor shall it cause any corrosive effect on metal to which it is applied. Any solvent dispersing medium or volatile component of the adhesive shall have no objectionable odor and shall not contain any benzene or carbon tetrachloride. The dried adhesive shall not emit nauseous, irritating, or toxic volatile matters or aerosols when the

adhesive is heated to any temperature up to 212 degrees F. The adhesive shall be nonflammable and fire resistant.

2.1.3 Caulking

ASTM C 920, Type S, Grade NS, Class 25, Use A.

2.1.4 Corner Angles

Nominal 0.016 inch aluminum 1 x 1 inch with factory applied kraft backing. Aluminum shall be ASTM B 209, Alloy 3003, 3105, or 5005.

2.1.5 Finishing Cement

Mineral fiber hydraulic-setting thermal insulating cement ASTM C 449/C 449M.

2.1.6 Fibrous Glass Cloth and Glass Tape

Fibrous glass cloth and glass tape shall have flame spread and smoke developed ratings of no greater than 25/50 when measured in accordance with ASTM E 84. Fibrous glass cloth and tape shall be 20 x 20 maximum size mesh. Tape shall be 4 inch wide rolls. Class 3 tape shall be 4.5 ounces per square yard.

2.1.7 Staples

Outward clinching type ASTM A 167, Type 304 or 316 stainless steel.

2.1.8 Jackets

ASTM C 921, Type I, maximum moisture vapor transmission 0.02 perms, minimum puncture resistance 50 Beach units on all surfaces except concealed ductwork, where a minimum puncture resistance of 25 Beach units is acceptable. Minimum tensile strength, 35 pound/inch width. ASTM C 921, Type II, minimum puncture resistance 25 Beach units, tensile strength minimum 20 pound/inchwidth. Jackets used on insulation exposed in finished areas shall have white finish suitable for painting without sizing.

2.1.8.1 White Vapor Retarder ASJ (All Service Jacket)

For use on hot/cold pipes, ducts, or equipment vapor retarder jackets used on insulation exposed in finished areas shall have white finish suitable for painting without sizing.

2.1.8.2 Aluminum Jackets

Aluminum jackets shall be corrugated, embossed or smooth sheet, 0.016 inch nominal thickness; ASTM B 209, Temper H14, Temper H16, Alloy 3003, 5005, or 3105 with factory applied moisture retarder. Corrugated aluminum jacket shall not be used outdoors. Aluminum jacket securing bands shall be Type 304 stainless steel, 0.015 inch thick, 1/2 inch wide for pipe under 12 inch diameter and 3/4 inch wide for pipe over 12 inch and larger diameter. Aluminum jacket circumferential seam bands shall be 2 x 0.016 inch aluminum matching jacket material. Bands for insulation below ground shall

be 3/4 x 0.020 inch) thick stainless steel, or fiberglass reinforced tape. The jacket may, at the option of the Contractor, be provided with a factory fabricated Pittsburg or "Z" type longitudinal joint. When the "Z" joint is used, the bands at the circumferential joints shall be designed by the manufacturer to seal the joints and hold the jacket in place.

2.1.8.3 Polyvinyl Chloride (PVC) Jackets

Polyvinyl chloride (PVC) jacket and fitting covers shall have high impact strength, UV resistant rating or treatment and moderate chemical resistance with minimum thickness 0.030 inch. Insulation under PVC jacket shall meet jacket manufacturer's written recommendations.

2.1.9 Vapor Retarder Coating

The vapor retarder coating shall be fire and water resistant and appropriately selected for either outdoor or indoor service. Color shall be white. The water vapor permeance of the compound shall not exceed 0.05 perm and shall be determined according to procedure B of ASTM E 96 utilizing apparatus described in ASTM E 96. The coating shall be a nonflammable, fire resistant type. The flash point of the compound shall not be less than 80 degrees F and shall be determined in accordance with ASTM D 3278. All other application and service properties shall be in accordance with ASTM C 647.

2.1.10 Wire

Soft annealed ASTM A 580/A 580M Type 302, 304 or 316 stainless steel, 16 or 18 gauge.

2.2 PIPE INSULATION MATERIALS

Pipe insulation materials shall be as follows:

2.2.1 Aboveground Cold Pipeline

Insulation for minus 30 degrees to plus 60 degrees F shall be as follows:

2.2.1.1 Cellular Glass

ASTM C 552, Type II, and Type III.

2.2.1.2 Flexible Cellular Insulation

ASTM C 534, Type I or II. Type II shall have vapor retarder skin on both sides of the insulation.

2.2.1.3 Phenolic Insulation

ASTM C 1126, Type III. A maximum allowable leachable chloride content shall comply with ASTM C 795 when tested in accordance with ASTM C 871.

2.2.2 Aboveground Hot Pipeline

For aboveground hot pipeline above 60 degrees F insulation the following requirements shall be met.

2.2.2.1 Mineral Fiber

ASTM C 547, Class 1 or Class 2 as required for the operating temperature range.

2.2.2.2 Calcium Silicate

ASTM C 533, Type I indoor only, or outdoors above 250 degrees F pipe temperature.

2.2.2.3 Cellular Glass

ASTM C 552, Type II and Type III.

2.2.2.4 Flexible Cellular Insulation

ASTM C 534, Type I or II to 200 degrees F service.

2.2.2.5 Phenolic Insulation

ASTM C 1126 Type III to 250 F service. A maximum allowable leachable chloride content shall comply with ASTM C 795 when tested in accordance with ASTM C 871.

2.2.3 Below ground Pipeline Insulation

ASTM C 552, Type II.

2.3 DUCT INSULATION MATERIALS

Duct insulation materials shall be as follows:

2.3.1 Rigid Mineral Fiber

ASTM C 612, Class 1.

2.3.2 Flexible Mineral Fiber

ASTM C 553, Type I, Class B-2.

2.3.3 Cellular Glass

ASTM C 552, Type I.

2.3.4 Phenolic Foam

ASTM C 1126 Type II. A maximum allowable leachable chloride content shall comply with ASTM C 795 when tested in accordance with ASTM C 871.

2.3.5 Flexible Cellular

ASTM C 534 Type II.

2.4 EQUIPMENT INSULATION MATERIALS

Equipment insulation materials shall be as follows:

2.4.1 Cold Equipment Insulation

For temperatures below 60 degrees F.

2.4.1.1 Cellular Glass

ASTM C 552, Type I, Type III, or Type IV as required.

2.4.1.2 Flexible Cellular Insulation

ASTM C 534, Type II.

2.4.1.3 Phenolic Foam

ASTM C 1126 Type II. A maximum allowable leachable chloride content shall comply with ASTM C 795 when tested in accordance with ASTM C 871.

2.4.2 Hot Equipment Insulation

For temperatures above 60 degrees F.

2.4.2.1 Rigid Mineral Fiber

ASTM C 612, Type 2, 3, 4 or 5 as required for temperature encountered to 1800 degrees F.

2.4.2.2 Flexible Mineral Fiber

ASTM C 553, Type 1, 2, 3, 4, 5, 6, or 7 as required for temperature encountered to 1200 degrees F.

2.4.2.3 Calcium Silicate

ASTM C 533, Type I, indoors only, or outdoors above 250 degrees F. Pipe shape may be used on diesel engine exhaust piping and mufflers to 1200 degrees F.

2.4.2.4 Cellular Glass

ASTM C 552, Type I, Type III, or Type IV as required.

2.4.2.5 Flexible Cellular Insulation

ASTM C 534, Type II, to 200 degrees F.

2.4.2.6 Phenolic Foam

ASTM C 1126 Type II to 250 degrees F. A maximum allowable leachable

chloride content shall comply with ASTM C 795 when tested in accordance with ASTM C 871.

PART 3 EXECUTION

3.1 APPLICATION - GENERAL

3.1.1 Installation

Except as otherwise specified, material shall be installed in accordance with the manufacturer's written instructions. Insulation materials shall not be applied until tests and heat tracing specified in other sections of this specification are completed. Material such as rust, scale, dirt and moisture shall be removed from surfaces to receive insulation. Insulation shall be kept clean and dry. Insulation shall not be removed from its shipping containers until the day it is ready to use and shall be returned to like containers or equally protected from dirt and moisture at the end of each workday. Insulation that becomes dirty shall be thoroughly cleaned prior to use. If insulation becomes wet or if cleaning does not restore the surfaces to like new condition, the insulation will be rejected, and shall be immediately removed from the jobsite. Joints shall be staggered on multi layer insulation. Mineral fiber thermal insulating cement shall be mixed with demineralized water when used on stainless steel surfaces. Insulation, jacketing and accessories shall be installed in accordance with MICA-01 standard plates except where modified herein or on the drawings.

3.1.2 Fire stopping

Where pipes and ducts pass through fire walls, fire partitions, above grade floors, and fire rated chase walls, the penetration shall be sealed with fire stopping materials as specified in Section 07840 FIRESTOPPING.

3.1.3 Painting and Finishing

Painting shall be as specified in Section 09900 PAINTING, GENERAL.

3.1.4 Flexible Cellular Insulation

Flexible cellular insulation shall be installed with seams and joints sealed with a contact adhesive. Flexible cellular insulation shall not be used on surfaces greater than 200 degrees F. Seams shall be staggered when applying multiple layers of insulation. Insulation exposed to weather and not shown to have jacketing shall be protected with two coats of UV resistant finish as recommended by the manufacturer after the adhesive is dry.

3.1.5 Welding

No welding shall be done on piping, duct or equipment without written approval of the Contracting Officer. The capacitor discharge welding process may be used for securing metal fasteners to duct.

3.1.6 Pipes/Ducts/Equipment which Require Insulation

Insulation is required, unless stated otherwise, on all pipes, ducts, or equipment, which operate at or below 60 F and at or above 80 F.

3.2 PIPE INSULATION INSTALLATION

3.2.1 Pipe Insulation

3.2.1.1 General

Pipe insulation shall be installed on aboveground hot and cold pipeline systems as specified below to form a continuous thermal retarder, including straight runs, fittings and appurtenances unless specified otherwise. Installation shall be with full length units of insulation and using a single cut piece to complete a run. Cut pieces or scraps abutting each other shall not be used. Pipe insulation shall be omitted on the following:

a. Pipe used solely for fire protection.

b. Chromium plated pipe to plumbing fixtures. However, fixtures for use by the physically handicapped shall have the hot water supply and drain, including the trap, insulated where exposed.

c. Sanitary drain lines.

d. Unions in pipe above 60 degrees F.

e. Strainers in pipe above 60 degrees F.

f. Check valves in pipe above 60 degrees F.

g. Air chambers.

h. Glycol heat recovery lines.

i. Heating piping within finned tube radiation cover and enclosure.

j. Swimming pool recirculation piping.

3.2.1.2 Pipes Passing Through Sleeves

a. Pipe insulation shall be continuous through the sleeve.

b. An aluminum jacket with factory applied moisture retarder shall be provided over the insulation wherever penetrations require sealing.

c. Where penetrating interior walls, the aluminum jacket shall extend 2 inches beyond either side of the wall and shall be secured on each end with a band.

d. Where penetrating floors, the aluminum jacket shall extend from a point below the backup material to a point 10 inches above the floor with one band at the floor and one not more than 1 inch from the end of the aluminum jacket.

e. Where penetrating waterproofed floors, the aluminum jacket shall extend from below the backup material to a point 2 inchesabove the flashing with a band 1 inch from the end of the aluminum jacket.

f. Where penetrating exterior walls, the aluminum jacket required for pipe exposed to weather shall continue through the sleeve to a point 2 inches beyond the interior surface of the wall.

g. Where penetrating roofs, pipe shall be insulated as required for interior service to a point flush with the top of the flashing and sealed with vapor retarder coating. The insulation for exterior application shall butt tightly to the top of flashing and interior insulation. The exterior aluminum jacket shall extend 2 inches down beyond the end of the insulation to form a counter flashing. The flashing and counter flashing shall be sealed underneath with caulking.

h. In high abuse areas such as janitor closets and traffic areas in equipment rooms, kitchens, and mechanical rooms, aluminum jackets shall be utilized. Pipe insulation to 5 ft above finished floor shall be protected. Other areas which specifically require protection to 5 ft above finished floor are storage closets, equipment rooms, gymnasiums and pools.

3.2.1.3 Pipes Passing Through Hangers

a. Insulation, whether hot or cold application, shall be continuous through hangers. All horizontal pipes 2 inches and smaller shall be supported on hangers with the addition of a Type 40 protection shield to protect the insulation in accordance with MSS SP-69. Whenever insulation shows signs of being compressed, or when the insulation or jacket shows visible signs of distortion at or near the support shield, insulation inserts as specified below for piping larger than 2 inches shall be installed.

b. Horizontal pipes larger than 2 inches at 60 degrees F and above shall be supported on hangers in accordance with MSS SP-69, and Section 15400 PLUMBING, GENERAL PURPOSE.

c. Horizontal pipes larger than 2 inches and below 60 degrees F shall be supported on hangers with the addition of a Type 40 protection shield in accordance with MSS SP-69. An insulation insert of cellular glass or calcium silicate shall be installed above each shield. The insert shall cover not less than the bottom 180 degree arc of the pipe. Inserts shall be the same thickness as the insulation, and shall extend 2 inches on each end beyond the protection shield. When insulation inserts are required per the above, and the insulation thickness is less than 1 inch, wooden or cork dowels or blocks may be installed between the pipe and the shield to prevent the weight of the pipe from crushing the insulation, as an option to installing insulation inserts. The insulation jacket shall be continuous over the wooden dowel, wooden block, or insulation insert.

d. Vertical pipes shall be supported with either Type 8 or Type 42 riser clamps with the addition of two Type 40 protection shields in accordance with MSS SP-69 covering the 360 degree arc of the insulation. An insulation insert of cellular glass or calcium silicate shall be installed between each shield and the pipe. The insert shall cover the 360 degree arc of the pipe. Inserts shall be the same thickness as the insulation, and shall extend 2 inches on each end beyond the protection shield. When insulation inserts are required per the above, and the insulation thickness is less than 1 inch, wooden or cork dowels or blocks may be installed between the pipe and the shield to prevent the hanger from crushing the insulation, as an option instead of installing insulation inserts. The insulation jacket shall be continuous over the wooden dowel, wooden block, or insulation insert. The vertical weight of the pipe shall be supported with hangers located in a horizontal section of the pipe. When the pipe riser is longer than 30 feet, the weight of the pipe shall be additionally supported with hangers in the vertical run of the pipe which are directly clamped to the pipe, penetrating the pipe insulation. These hangers shall be insulated and the insulation jacket sealed as indicated herein for anchors in a similar service.

e. Inserts shall be covered with a jacket material of the same appearance and quality as the adjoining pipe insulation jacket, shall overlap the adjoining pipe jacket 1-1/2 inches, and shall be sealed as required for the pipe jacket. The jacket material used to cover inserts in flexible cellular insulation shall conform to ASTM C 921, Type 1, and is allowed to be of a different material than the adjoining insulation material.

3.2.1.4 Pipes Passing Through Walls

a. For hot water pipes supplying lavatories or other similar heated service which requires insulation, the insulation shall be terminated on the backside of the finished wall. The insulation termination shall be protected with two coats of vapor barrier coating with a minimum total thickness of 1/16 inch applied with glass tape embedded between coats (if applicable). The coating shall extend out onto the insulation 2 inches and shall seal the end of the insulation. Glass tape seams shall overlap 1 inch. Caulk the annular space between the pipe and wall penetration. Cover the pipe and wall penetration with a properly sized (well fitting) escutcheon plate. The escutcheon plate shall overlap the wall penetration at least 3/8 inch.

b. For domestic cold water pipes requiring insulation, the insulation shall be terminated on the finished side of the wall (i.e. insulation must cover the pipe throughout the wall penetration). The insulation shall be protected with two coats of vapor barrier coating with a minimum total thickness of 1/16 inch. The coating shall extend out onto the insulation 2 inches and shall seal the end of the insulation. Caulk the annular space between the pipe and wall penetration. Cover the pipe and wall penetration with a

properly sized (well fitting) escutcheon plate. The escutcheon plate shall overlap the wall penetration by at least 3/8 inch.

3.2.1.5 Flexible Cellular Pipe Insulation

Flexible cellular pipe insulation shall be tubular form for pipe sizes 6 inches and less. Type II sheet insulation used on pipes larger than 6 inches shall not be stretched around the pipe. On pipes larger than 12 inches, adhere insulation directly to the pipe on the lower 1/3 of the pipe. Seams shall be staggered when applying multiple layers of insulation. Sweat fittings shall be insulated with miter-cut pieces the same size as on adjacent piping. Screwed fittings shall be insulated with sleeved fitting covers fabricated from miter-cut pieces and shall be overlapped and sealed to the adjacent pipe insulation.

3.2.2 Aboveground Cold Pipelines

The following shall be included for aboveground cold pipelines minus 30 degrees to plus 60 degrees F:

a. Domestic cold and chilled drinking water piping.
b. Make-up water piping.
c. Horizontal and vertical portions of interior roof drain piping.
d. Chilled water piping.
e. Air conditioner condensate drain piping.
f. Foundation sump-pump piping.
g. Domestic piping to pools.
h. Refrigerqant suction piping.

3.2.2.1 Insulation Thickness

Insulation thickness for cold pipelines shall be determined using Table I.

Table I - Cold Piping Insulation Thickness
Pipe Size (inches)

Type of Service	Material	Runouts up to 2 in*	1 in & less	1.25 - 2 in	2.5 - 4 in	5 - 6 in	8 in & larger
Chilled water supply & return and refrigerant suction	CG	1.5	1.5	1.5	2.0	2.0	2.0
	FC	0.5	1.0	1.0	1.0	1.0	1.0
	PF	0.5	1.0	1.0	1.0	1.0	1.0
Cold domestic water, above and below ceilings in mechanical spaces	CG	1.5	1.5	1.5	1.5	1.5	1.5
	FC	3/8	3/8	3/8	3/8	3/8	3/8
	PF	3/8	3/8	3/8	3/8	3/8	3/8

Table I - Cold Piping Insulation Thickness
Pipe Size (inches)

Type of Service	Material	Runouts up to 2 in*	1 in & less	1.25 - 2 in	2.5 - 4 in	5 - 6 in	8 in & larger
and oudoors							
Exposed lavatory drains exposed domestic water piping & drains to areas for handicap personnel	FC	0.5	0.5	0.5	0.5	3/4	3/4
	MF	0.5	1.0	1.0	1.5	1.5	1.5
Interior roof drain leaders (including underside of roof drain fitting)	FC		1.0	1.5	1.5	1.5	1.5
	PF		0.5	0.5	0.5	0.5	0.5
	CG		1.5	1.5	1.5	1.5	1.5
Air conditioning condensate drain located inside building	FC		3/8	0.5	0.5	N/A	N/A
	PF		3/8	3/8	3/8	N/A	N/A

*When runouts to terminal units exceed 12 feet, the entire length of runout shall be insulated like main feed pipe.

LEGEND:

PF - Phenolic Foam
CG - Cellular Glass
CS - Calcium Silicate
MF - Mineral Fiber
FC - Flexible Cellular

3.2.2.2 Jacket for Fibrous, Cellular Glass, and Phenolic Foam Insulated Pipe

Insulation shall be covered with a factory applied vapor retarder jacket or field applied seal welded PVC jacket. Insulation inside the building shown to be protected with an aluminum jacket shall have the insulation and vapor retarder jacket installed as specified herein. The aluminum jacket shall be installed as specified for piping exposed to weather, except sealing of the laps of the aluminum jacket is not required. In high abuse areas such

as janitor closets, equipment rooms, kitchens, and mechanical rooms, aluminum jackets shall be utilized. Pipe insulation to the 5 ft level will be protected. Other areas which specifically require protection to the 5 ft level are storage closets, equipment rooms, Gymnasiums and pools..

3.2.2.3 Insulation for Straight Runs (Fibrous, Cellular Glass and Phenolic Foam)

a. Insulation shall be applied to the pipe with joints tightly butted. The ends of fibrous insulation shall be sealed off with vapor retarder coating at intervals not to exceed 15 feet.

b. Longitudinal laps of the jacket material shall overlap not less than 1-1/2 inches. Butt strips 3 inches wide shall be provided for circumferential joints.

c. Laps and butt strips shall be secured with adhesive and stapled on 4 inch centers if not factory self-sealing.

d. Factory self-sealing lap systems may be used when the ambient temperature is between 40 degrees and 120 degrees F during installation. The lap system shall be installed in accordance with manufacturer's recommendations. Stapler shall be used only if specifically recommended by the manufacturer. Where gaps occur, the section shall be replaced or the gap repaired by applying adhesive under the lap and then stapling.

e. All Staples, including those used to repair factory self-seal lap systems, shall be coated with a vapor retarder coating. All seams, except those on factory self-seal systems shall be coated with vapor retarder coating.

f. Breaks and punctures in the jacket material shall be patched by wrapping a strip of jacket material around the pipe and securing it with adhesive, stapling, and coating with vapor retarder coating. The patch shall extend not less than 1-1/2 inches past the break.

g. At penetrations such as thermometers, the voids in the insulation shall be filled and sealed with vapor retarder coating.

3.2.2.4 Insulation for Fittings and Accessories

a. Pipe insulation shall have ends thoroughly coated with a vapor retarder coating not less than 6 inches from each flange, union, valve, anchor, or fitting in all directions.

b. Precut, preformed insulation for placement over fittings, flanges, unions, valves, anchors, and mechanical couplings shall be used. Precut, preformed insulation shall exhibit the same properties as the adjoining pipe insulation. Where precut/preformed is unavailable, rigid preformed pipe insulation sections may be segmented into the shape required. Insulation of the same thickness and conductivity as the adjoining pipe insulation shall

be used. If nesting size insulation is used, the insulation shall be overlapped 2 inches or one pipe diameter. Loose fill mineral fiber or insulating cement shall be used to fill the voids. Elbows insulated using segments shall not have less than 3 segments per elbow.

c. Upon completion of installation of insulation on flanges, unions, valves, anchors, fittings and accessories, terminations and insulation not protected by factory vapor retarder jackets or PVC fitting covers shall be protected with two coats of vapor retarder coating with a minimum total thickness of 1/16 inch, applied with glass tape embedded between coats. Tape seams shall overlap 1 inch.The coating shall extend out onto the adjoining pipe insulation 2 inches.

d. Anchors attached directly to the pipe shall be insulated for a sufficient distance to prevent condensation but not less than 6 inches from the insulation surface.

e. Flexible connections at pumps and other equipment shall be insulated with 0.59 inch flexible cellular insulation, unless otherwise indicated.

f. Insulation shall be marked showing the location of unions, strainers, and check valves.

3.2.2.5 Optional PVC Fitting Covers

At the option of the Contractor, premolded, one or two piece PVC fitting covers may be used in lieu of the vapor retarder and embedded glass tape. Factory premolded insulation segments shall be used under the fitting covers for elbows. Insulation segments shall be the same thickness as adjoining pipe insulation and the insulation shall be protected with one coat of vapor retarder coating under the PVC cover. The covers shall be secured by PVC vapor retarder tape, adhesive, seal-welding or with tacks made for securing PVC covers. Seams in the cover, and tacks and laps to adjoining pipe insulation jacket, shall be sealed with vapor retarder tape to ensure that the assembly has a continuous vapor seal.

3.2.3 Aboveground Hot Pipelines

For hot pipelines above 60 degrees F the following shall be included:

a. Domestic hot water piping and recirculating piping.
b. Steam piping.
c. Condensate return and pumped condensate piping.
d. Hot water heating.
e. Diesel engine exhaust piping.
f. Steam exhaust head vent piping.

3.2.3.1 Insulation Thickness

Insulation thickness for hot pipelines shall be determined using Table II.

LEGEND:

PF - Phenolic Foam
CG - Cellular Glass
CS - Calcium Silicate
MF - Mineral Fiber
FC - Flexible Cellular

Table II - Hot Piping Insulation Thickness
Pipe Size (inches)

Type of Service (degrees F)	Material	Runouts up to	1 in & less	1.25 - 2 in	2.5 -4 in	5 -6 in	8 in & larger
Hot domestic water supply & recirculating system (200 F max)	CG	1.5	1.5	1.5	1.5	1.5	1.5
	FC	0.5	1.0	1.0	1.5	1.5	1.5
	PF	0.5	1.0	1.0	1.0	1.0	1.0
	MF	0.5	1.0	1.0	1.5	1.5	1.5
Steam, condensate return, pump discharge, and steam exhaust head vent (201-250 F)	CG		1.5	2.0	2.0	2.0	2.5
	PF		1.0	1.0	1.0	1.0	1.5
	MF		1.5	1.5	2.0	2.0	2.5
	CS		1.5	2.0	2.5	2.5	2.5
Steam, condensate return and diesel engine exhaust (351-500 F)	CG	2.0	3.5	4.0	4.5	5.0	5.5
	MF	1.5	3.0	3.5	4.0	4.0	4.5
	CS/PF	2.0	3.5	4.0	4.5	5.0	5.5
Heating hot water, supply & return (250 F max), including piping from pool heat exchangers to the pool recirculation piping	CG	1.5	1.5	2.0	2.0	2.0	2.5
	PF	0.5	1.0	1.0	1.0	1.0	1.5
	MF	0.5	1.5	1.5	2.0	2.5	3.0
	CS	1.0	1.5	2.0	2.5	2.5	2.5

*When runouts to terminal units exceed 12 feet, the entire length of runout shall be insulated like the main feed pipe.

3.2.3.2 Jacket for Insulated Pipe

Insulation shall be covered, in accordance with manufacturer's recommendations, with a factory applied Type II jacket or field applied aluminum where required or seal welded PVC.

3.2.3.3 Insulation for Straight Runs

a. Insulation shall be applied to the pipe with joints tightly butted.

b. Longitudinal laps of the jacket material shall overlap not less than 1-1/2 inches, and butt strips 3 incheswide shall be provided for circumferential joints.

c. Laps and butt strips shall be secured with adhesive and stapled on 4 inch centers if not factory self-sealing. Adhesive may be omitted where pipe is concealed.

d. Factory self-sealing lap systems may be used when the ambient temperature is between 40 degrees and 120 degrees F and shall be installed in accordance with manufacturer's instructions. Laps and butt strips shall be stapled whenever there is nonadhesion of the system. Where gaps occur, the section shall be replaced or the gap repaired by applying adhesive under the lap and then stapling.

e. Breaks and punctures in the jacket material shall be patched by wrapping a strip of jacket material around the pipe and be secured with adhesive and stapled on 4 inch centers if not factory self-sealing. Adhesive may be omitted where pipe is concealed. Patch shall extend not less than 1-1/2 inches past the break.

f. Flexible cellular pipe insulation shall be installed by slitting tubular sections and applying onto piping or tubing. Alternately, whenever possible, slide unslit sections over the open ends of piping or tubing. All seams and butt joints shall be secured and sealed with adhesive. When using self seal products only the butt joints shall be secured with adhesive. Insulation shall be pushed on the pipe, never pulled. Stretching of insulation may result in open seams and joints. All edges shall be clean cut. Rough or jagged edges of the insulation shall not be permitted. Proper tools such as sharp knives shall be used. Type II sheet insulation when used on pipe larger than 6 inches shall not be stretched around the pipe. On pipes larger than 12 inches, adhere sheet insulation directly to the pipe on the lower 1/3 of the pipe.

3.2.3.4 Insulation for Fittings and Accessories

a. The run of the line pipe insulation shall have the ends brought up to the item.

b. Insulation of the same thickness and conductivity as the adjoining pipe insulation, either premolded or segmented, shall be placed around the item abutting the adjoining pipe insulation, or if nesting size insulation is used, overlapping 2 inches or one pipe diameter. Loose fill mineral fiber or insulating cement shall be used to fill the voids. Insulation for elbows less than 3 inch size shall be premolded. Insulation for elbows 3 inch size and larger shall be either premolded or segmented. Elbows insulated using segments shall have not less than 3 segments per elbow.

Insulation may be wired or taped on until finish is applied.

c. Upon completion of installation of insulation on flanges, unions, valves, anchors, fittings and accessories, terminations and insulation not protected by factory vapor retarder jackets or PVC fitting covers shall be protected with two coats of Class 1 adhesive applied with glass tape embedded between coats. Tape seams shall overlap 1 inch. Adhesive shall extend onto the adjoining insulation not less than 2 inches. The total dry film thickness shall be not less than 1/16 inch.

d. Insulation terminations shall be tapered to unions at a 45-degree angle.

e. At the option of the Contractor, factory premolded one- or two-piece PVC fitting covers may be used in lieu of the adhesive and embedded glass tape. Factory premolded segments or factory or field cut blanket insert insulation segments shall be used under the cover and shall be the same thickness as adjoining pipe insulation. The covers shall be secured by PVC vapor retarder tape, adhesive, seal-welding or with tacks made for securing PVC covers.

3.2.4 Piping Exposed to Weather

Piping exposed to weather shall be insulated and jacketed as specified for the applicable service inside the building. After this procedure, an aluminum jacket shall be applied. PVC jacketing requires no factory applied jacket beneath it. Flexible cellular insulation exposed to weather shall be treated in accordance with paragraph PIPE INSULATION MATERIALS.

3.2.4.1 Aluminum Jacket

The jacket for hot piping may be factory applied. The jacket shall overlap not less than 2 inches at longitudinal and circumferential joints and shall be secured with bands at not more than 12 inch centers. Longitudinal joints shall be overlapped down to shed water and located at 4 or 8 o'clock positions. Joints on piping 60 degrees F and below shall be sealed with caulking while overlapping to prevent moisture penetration. Where jacketing on piping 60 degrees F and below abuts an uninsulated surface, joints shall be caulked to prevent moisture penetration. Joints on piping above 60 degrees F shall be sealed with a moisture retarder.

3.2.4.2 Insulation for Fittings

Flanges, unions, valves, fittings, and accessories shall be insulated and finished as specified for the applicable service. Two coats of an emulsion type weatherproof mastic recommended by the insulation manufacturer shall be applied with glass tape embedded between coats. Tape overlaps shall be not less than 1 inch and the adjoining aluminum jacket not less than 2 inches. Factory preformed aluminum jackets may be used in lieu of the above. Molded PVC fitting covers shall be used with PVC lagging and adhesive welded moisture tight.

3.2.4.3 PVC Lagging

PVC lagging shall be ultraviolet resistant and adhesive welded vapor tight with manufacturer's recommended adhesive. Installation shall include provision for thermal expansion.

3.2.5 Below ground Pipe Insulation

The following shall be included:

a. Steam.
b. Condensate, return and pumped condensate.

3.2.5.1 Type of Insulation

Below ground pipe shall be insulated with 3 inch cellular glass insulation set in a coat of bedding compound as recommended by the manufacturer.

3.2.5.2 Installation of Below ground Pipe Insulation

a. Bore surfaces of the insulation shall be coated with a thin coat of gypsum cement of a type recommended by the insulation manufacturer. Coating thickness shall be sufficient to fill surface cells of insulation. Mastic type materials shall not be used for this coating.

b. Insulation applied to the pipe shall have joints tightly butted and bedded together with bedding compound as recommended by the manufacturer. Butt joints shall be staggered.

c. Stainless steel bands, 3/4 inch wide by 0.020 inch thick shall be used to secure insulation in place. A minimum of two bands per section of insulation shall be applied. As an alternate, fiberglass reinforced tape may be used to secure insulation on piping up to 12 inches in diameter. A minimum of two bands per section of insulation shall be applied.

d. Insulation shall terminate at anchor blocks but shall be continuous through sleeves and manholes.

e. At point of entry to buildings, underground insulation shall be terminated 2 inches inside the wall or floor, shall butt tightly against the aboveground insulation and the butt joint shall be sealed with vapor retarder coating.

f. Provision for expansion and contraction shall be made in accordance with the insulation manufacturer's recommendations.

g. Flanges, couplings, valves, and fittings shall be insulated with factory premolded, prefabricated, or field-fabricated sections of insulation of the same material and thickness as the adjoining pipe insulation. Insulation sections shall be secured in place with wire, bore surfaces coated, and joints sealed as specified.

h. Insulation, including fittings, shall be finished with three coats of asphaltic mastic, with 10 by 10 glass mesh reinforcing fabric embedded between coats. Fabric shall be overlapped a minimum of 2 inches at joints. Total film thickness shall be a minimum of 3/16 inch. As an alternate, a prefabricated bituminous laminated jacket, reinforced with 10 by 10-glass fiber mesh, shall be applied to the insulation. Jacketing material and application procedures shall match manufacturer's written instructions.

i. At termination points, other than building entrances, the mastic and cloth or tape shall cover the ends of insulation and extend 2 inches along the bare pipe.

3.3 DUCT INSULATION INSTALLATION

Except for oven hood exhaust duct insulation, corner angles shall be installed on external corners of insulation on ductwork in exposed spaces before covering with jacket. Duct insulation shall be omitted on exposed supply and return ducts in air conditioned spaces unless otherwise shown. Air conditioned spaces shall be defined as those spaces directly supplied with cooled conditioned air (or provided with a cooling device such as a fan-coil unit) and heated conditioned air (or provided with a heating device such as a unit heater, radiator or convector). Supply and return air ductwork above swimming pool ceilings shall be insulated.

3.3.1 Duct Insulation Thickness

Duct insulation thickness shall be in accordance with Table III.

Table III - Minimum Duct Insulation (inches)

Cold Air Ducts	2.0
Relief Ducts	1.5
Fresh Air Intake Ducts	1.5
Warm Air Ducts	2.0
Relief Ducts	1.5
Fresh Air Intake Ducts	1.5

3.3.2 Insulation and Vapor Retarder for Cold Air Duct

Insulation and vapor retarder for cold air duct below 60 degrees F: Ducts and associated equipment shall be insulated to a thickness which is in accordance with Table III. The following shall be insulated:

a. Supply ducts.
b. Flexible runouts (field-insulated).
c. Plenums.
d. Duct-mounted coil casings.
e. Coil headers and return bends.
f. Coil casings.
g. Fresh air intake ducts.
h. Filter boxes.

Insulation for rectangular ducts shall be flexible type where concealed, minimum density 3/4 pcf and rigid type where exposed, minimum density 3 pcf. Insulation for round/oval ducts shall be flexible type, minimum density 3/4 pcf with a factory Type I jacket; or, a semi rigid board, minimum density 3 pcf, formed or fabricated to a tight fit, edges beveled and joints tightly butted and staggered, with a factory applied Type I all service jacket. Insulation for exposed ducts shall be provided with either a white, paintable, factory-applied Type I jacket or a vapor retarder jacket coating finish as specified. Fibrous and cellular glass insulation on concealed duct shall be provided with a factory-applied Type I vapor retarder jacket. The total dry film thickness shall be approximately 1/16 inch. Duct insulation shall be continuous through sleeves and prepared openings except fire wall penetrations. Duct insulation terminating at fire dampers, shall be continuous over the damper collar and retaining angle of fire dampers, which are exposed to unconditioned air and which may be prone to condensate formation. Duct insulation and vapor retarder shall cover the collar, neck, and any uninsulated surfaces of diffusers, registers and grills. Vapor retarder materials shall be applied to form a complete unbroken vapor seal over the insulation.

3.3.2.1 Installation on Concealed Duct

a. For rectangular, oval or round ducts, insulation shall be attached by applying Class 2 adhesive around the entire perimeter of the duct in 6 inch wide strips on 12 inch centers.

b. For rectangular and oval ducts, 24 inches and larger insulation shall be additionally secured to bottom of ducts by the use of mechanical fasteners. Fasteners shall be spaced on 18 inch centers and not more than 18 inches from duct corners.

c. For rectangular, oval and round ducts, mechanical fasteners shall be provided on sides of duct risers for all duct sizes. Fasteners shall be spaced on 18 inch centers and not more than 18 inches from duct corners.

d. Insulation shall be impaled on the mechanical fasteners where used and shall be pressed thoroughly into the adhesive. Care shall be taken to ensure vapor retarder jacket joints overlap 2 inches. The insulation shall not be compressed to a thickness less than that specified. Insulation shall be carried over standing seams and trapeze-type duct hangers.

e. Self-locking washers shall be installed where mechanical fasteners are used. The pin shall be trimmed back and bent over.

f. Jacket overlaps shall be secured under the overlap with Class 2 adhesive and stapled on 4 inch centers. Staples and seams shall be coated with a brush coat of vapor retarder coating.

g. Breaks in the jacket material shall be covered with patches of the same material as the vapor retarder. The patches shall extend not less than 2 inches beyond the break or penetration in all

directions and shall be secured with Class 2 adhesive and staples. Staples and joints shall be sealed with a brush coat of vapor retarder coating.

h. At jacket penetrations such as hangers, thermometers, and damper operating rods, voids in the insulation shall be filled and the penetration sealed with a brush coat of vapor retarder coating.

i. Insulation terminations and pin punctures shall be sealed and flashed with a reinforced vapor retarder coating finish. The coating shall overlap the adjoining insulation and uninsulated surface 2 inches. Pin puncture coatings shall extend 2 inches from the puncture in all directions.

j. Where insulation standoff brackets occur, insulation shall be extended under the bracket and the jacket terminated at the bracket.

3.3.2.2 Installation on Exposed Duct Work

a. For rectangular ducts, rigid insulation shall be secured to the duct by mechanical fasteners on all four sides of the duct, spaced not more than 12 inches apart and not more than 3 inches from the edges of the insulation joints. A minimum of two rows of fasteners shall be provided for each side of duct 12 inches and larger. One row shall be provided for each side of duct less than 12 inches.

b. Duct insulation shall be formed with minimum jacket seams. Each piece of rigid insulation shall be fastened to the duct using mechanical fasteners. When the height of projections is less than the insulation thickness, insulation shall be brought up to standing seams, reinforcing, and other vertical projections and shall not be carried over. Vapor retarder jacket shall be continuous across seams, reinforcing, and projections. When height of projections is greater than the insulation thickness, insulation and jacket shall be carried over.

c. Insulation shall be impaled on the fasteners; self-locking washers shall be installed and the pin trimmed and bent over.

d. Joints in the insulation jacket shall be sealed with a 4 inchwide strip of the same material as the vapor retarder jacket. The strip shall be secured with Class 2 adhesive and stapled. Staples and seams shall be sealed with a brush coat of vapor retarder coating.

e. Breaks and ribs or standing seam penetrations in the jacket material shall be covered with a patch of the same material as the jacket. Patches shall extend not less than 2 inches beyond the break or penetration and shall be secured with Class 2 adhesive and stapled. Staples and joints shall be sealed with a brush coat of vapor retarder coating.

f. At jacket penetrations such as hangers, thermometers, and damper operating rods, the voids in the insulation shall be filled and the penetrations sealed with a brush coat of vapor retarder coating.

g. Insulation terminations and pin punctures shall be sealed and flashed with a reinforced vapor retarder coating finish. The coating shall overlap the adjoining insulation and uninsulated surface 2 inches. Pin puncture coatings shall extend 2 inches from the puncture in all directions.

h. Oval and round ducts, flexible type, shall be insulated with factory Type I jacket insulation with minimum density of 3/4 pcf, attached by applying Class 2 adhesive around the entire perimeter of the duct in 6 inch wide stripe on 12 inch centers.

3.3.3 Insulation for Warm Air Duct

For warm air ducts above 60 degrees F, ducts and associated equipment shall be insulated to a thickness which is in accordance with Table III. The following shall be insulated:

a. Supply ducts.
b. Flexible runouts (field insulated).
c. Plenums.
d. Duct-mounted coil casings.
e. Coil-headers and return bends.
f. Coil casings
g. Fresh air intake ducts.

Insulation for rectangular ducts shall be flexible type where concealed, minimum density 3/4 pcf; and rigid type where exposed, minimum density 3 pcf. Insulation on exposed ducts shall be provided with a white, paintable, factory-applied Type II jacket, or finished with Class 1 adhesive finish. Flexible type insulation shall be used for round ducts, minimum density 3/4 pcf with a factory-applied Type II jacket. Insulation on concealed duct shall be provided with a factory-applied Type II jacket. Class 1 adhesive finish where indicated to be used shall be accomplished by applying two coats of Class 1 adhesive with a layer of glass cloth embedded between the coats. The total dry film thickness shall be approximately 1/16 inch. Duct insulation shall be continuous through sleeves and prepared openings. Duct insulation shall terminate at fire dampers and flexible connections.

3.3.3.1 Installation on Concealed Duct

a. For rectangular, oval and round ducts, insulation shall be attached by applying Class 2 adhesive around the entire perimeter of the duct in 6 inch wide strips on 12 inch centers.

b. For rectangular and oval ducts 24 inches and larger, insulation shall be secured to the bottom of ducts by the use of mechanical fasteners. Fasteners shall be spaced on 18 inch centers and not more than 18 inches from duct corner.

c. For rectangular, oval and round ducts, mechanical fasteners shall be provided on sides of duct risers for all duct sizes. Fasteners shall be spaced on 18 inch centers and not more than 18 inches from duct corners.

d. The insulation shall be impaled on the mechanical fasteners where used and shall be pressed thoroughly into the adhesive. The insulation shall not be compressed to a thickness less than that specified. Insulation shall be carried over standing seams and trapeze-type hangers.

e. Self-locking washers shall be installed where mechanical fasteners are used and the pin trimmed and bent over.

f. Insulation jacket shall overlap not less than 2 inches at joints and the lap shall be secured with Class 2 adhesive under the lap and stapled on 4 inch centers.

3.3.3.2 Installation on Exposed Duct

a. For rectangular ducts, the rigid insulation shall be secured to the duct by the use of mechanical fasteners on all four sides of the duct, spaced not more than 12 inches apart and not more than 3 inches from the edges of the insulation joints. A minimum of two rows of fasteners shall be provided for each side of duct 12 inches and larger and a minimum of one row for each side of duct less than 12 inches.

b. Duct insulation with factory-applied jacket shall be formed with minimum jacket seams, and each piece of rigid insulation shall be fastened to the duct using mechanical fasteners. When the height of projection is less than the insulation thickness, insulation shall be brought up to standing seams, reinforcing, and other vertical projections and shall not be carried over the projection. Jacket shall be continuous across seams, reinforcing, and projections. Where the height of projections is greater than the insulation thickness, insulation and jacket shall be carried over the projection.

c. Insulation shall be impaled on the fasteners; self-locking washers shall be installed and pin excess clipped and bent over.

d. Joints on jacketed insulation shall be sealed with a 4 inch wide strip of the same material as the jacket. The strip shall be secured with Class 2 adhesive and stapled.

e. Breaks and penetrations in the jacket material shall be covered with a patch of the same material as the jacket. Patches shall extend not less than 2 inches beyond the break or penetration and shall be secured with Class 2 adhesive and stapled.

f. Insulation terminations and pin punctures shall be sealed and flashed with a Class 1 adhesive. Two coats of Class 1 adhesive

coating shall be applied with glass cloth embedded between coats. The total coating shall have a dry film thickness of approximately 1/16 inch and shall overlap the adjoining insulation and uninsulated surface 2 inches.

g. Oval and round ducts, flexible type, shall be insulated with factory Type I jacket insulation, minimum density of 3/4 pcf attached by applying Class 2 adhesive around the entire perimeter of the duct in 6 inch wide stripe on 12 inch center. Joints shall be sealed with a 4 inch wide strip of the same material as the jacket. The strip shall be secured with Class 2 adhesive and stapled.

3.3.4 Ducts Handling Air for Dual Purpose

For air handling ducts for dual purpose below and above 60 degrees F, ducts shall be insulated as specified for cold air duct.

3.3.5 Duct Test Holes

After duct systems have been tested, adjusted, and balanced, breaks in the insulation and jacket shall be repaired in accordance with the applicable section of this specification for the type of duct insulation to be repaired.

3.3.6 Duct Exposed to Weather

3.3.6.1 Installation

Ducts exposed to weather shall be insulated and finished as specified for the applicable service for exposed duct inside the building. After the above is accomplished, the insulation shall then be further finished as detailed in the following subparagraphs.

3.3.6.2 Round Duct

Aluminum jacket with factory applied moisture retarder shall be applied with the joints lapped not less than 3 inches and secured with bands located at circumferential laps and at not more than 12 inch intervals throughout. Horizontal joints shall lap down to shed water and located at 4 or 8 o'clock position. Joints shall be sealed with silicone sealant to prevent moisture penetration. Where jacketing abuts an uninsulated surface, joints shall be sealed with silicone sealant.

3.3.6.3 Fittings

Fittings and other irregular shapes shall be finished as specified for rectangular ducts.

3.3.6.4 Rectangular Ducts

Two coats of weatherproof mastic shall be applied to the entire surface with a layer of glass cloth embedded between coats. Glass cloth overlaps at joints and adjoining surfaces shall be not less than 2 inches. Each

coat of weatherproof mastic shall be 1/16 inch minimum thickness. The top of the exterior duct work shall be built up with insulation in such a manner as to ensure a positive drain of any rain water which may appear. The minimum pitch of the built up section shall be in accordance with the recommendation of the manufacturer of the vapor retarder/weatherproof mastic. Care should be taken in the construction of the built up section so that no low areas appear; this shall ensure no "pooling" of water on the vapor retarder which leads to premature degradation of the retarder and subsequent deterioration of the insulation.

3.4 EQUIPMENT INSULATION INSTALLATION

3.4.1 General

Removable insulation sections shall be provided to cover parts of equipment which must be opened periodically for maintenance including vessel covers, fasteners, flanges and accessories. Equipment insulation shall be omitted on the following:

a. Cleanouts.
b. ASME stamps.
c. Manufacturer's nameplates.

3.4.2 Insulation for Cold Equipment

Cold equipment below 60 degrees F: Insulation shall be provided on equipment handling media below 60 degrees F including the following:

a. Pumps.
b. Refrigeration equipment parts that are not factory insulated.
c. Drip pans under chilled equipment.
d. Water softeners.
e. Cold and chilled water pumps.
f. Pneumatic water tanks.
g. Roof drain bodies.
h. Expansion and air separation tanks.

3.4.2.1 Insulation Type

Insulation shall be suitable for the temperature encountered. Thicknesses shall be as follows:

a. Equipment handling media between 35 and 60 degrees F: 2 inch thick cellular glass, 1-1/2 inch thick flexible cellular, or 1 inch thick phenolic foam.

b. Equipment handling media between 0 degree F and 34 degrees F: 3-1/2 inch thick cellular glass, 2-1/2 inch flexible cellular, or 1-1/2 inch thick phenolic foam.

c. Equipment handling media between minus 30 degrees F and 1 degree F: 4 inch thick cellular glass 3 inch thick flexible cellular, or 1-1/2 inch thick phenolic foam.

3.4.2.2 Pump Insulation

a. Pumps shall be insulated by forming a box around the pump housing. The box shall be constructed by forming the bottom and sides using joints which do not leave raw ends of insulation exposed. Joints between sides and between sides and bottom shall be joined by adhesive with lap strips for rigid mineral fiber and contact adhesive for flexible cellular insulation. The box shall conform to the requirements of MICA-01 plate No. 49 when using flexible cellular insulation. Joints between top cover and sides shall fit tightly forming a female shiplap joint on the side pieces and a male joint on the top cover, thus making the top cover removable.

b. Exposed insulation corners shall be protected with corner angles.

c. Upon completion of installation of the insulation, including removable sections, two coats of vapor retarder coating shall be applied with a layer of glass cloth embedded between the coats. The total dry thickness of the finish shall be 1/16 inch. A parting line shall be provided between the box and the removable sections allowing the removable sections to be removed without disturbing the insulation coating. Caulking shall be applied to parting line, between equipment and removable section insulation, and at all penetrations.

3.4.2.3 Other Equipment

a. Insulation shall be formed or fabricated to fit the equipment. To ensure a tight fit on round equipment, edges shall be beveled and joints shall be tightly butted and staggered.

b. Insulation shall be secured in place with bands or wires at intervals as recommended by the manufacturer but not more than 12 inch centers except flexible cellular which shall be adhered. Insulation corners shall be protected under wires and bands with suitable corner angles.

c. Cellular glass and phenolic foam insulation shall be set in a coating of bedding compound, and joints shall be sealed with bedding compound as recommended by the manufacturer. Mineral fiber insulation joints shall be filled with finishing cement.

d. Insulation on heads of heat exchangers shall be removable. Removable section joints shall be fabricated using a male-female shiplap type joint. The entire surface of the removable section shall be finished by applying two coats of vapor retarder coating with a layer of glass cloth embedded between the coats. The total dry thickness of the finish shall be 1/16 inch.

e. Exposed insulation corners shall be protected with corner angles.

f. Insulation on equipment with ribs shall be applied over 6 x 6 inches by 12 gauge welded wire fabric which has been cinched in place, or if approved by the Contracting Officer, spot welded to

the equipment over the ribs. Insulation shall be secured to the fabric with J-hooks and 2 x 2 incheswashers or shall be securely banded or wired in place on 12 inch centers.

3.4.2.4 Vapor Retarder

Upon completion of installation of insulation, penetrations shall be caulked. Two coats of vapor retarder coating shall be applied over insulation, including removable sections, with a layer of glass cloth embedded between the coats. The total dry thickness of the finish shall be 1/16 inch. Caulking shall be applied to parting line between equipment and removable section insulation.

3.4.3 Insulation for Hot Equipment

Insulation shall be provided on equipment handling media above 60 degrees F including the following:

a. Converters.
b. Heat exchangers.
c. Hot water generators.
d. Water heaters.
e. Pumps handling media above 130 degrees F.
f. Hot water storage tanks.
g. Air separation tanks.
h. Surge tanks.
i. Flash tanks.
j. Condensate receivers.

3.4.3.1 Insulation

Insulation shall be suitable for the temperature encountered. Shell and tube-type heat exchangers shall be insulated for the temperature of the shell medium. Insulation thicknesses shall be as follows:

a. Equipment handling steam to 15 psig or other media to 250 degrees F: 2 inch thick rigid mineral fiber, 2 inch thick flexible mineral fiber, 2 inch thick calcium silicate, 1.5 inch cellular glass, 1.5 inch thick phenolic foam; to 200 degrees F 1.0 inch Flexible Cellular.

b. Equipment handling steam to 200 psig or other media to 400 degrees F: 3 inch thick rigid mineral fiber, 3 inch) thick flexible mineral fiber, 3 inch thick calcium silicate, 3 inch thick cellular glass.

c. Equipment handling media to 600 degrees F: 5 inch thick rigid mineral fiber, 6 inch thick flexible mineral fiber, 6 inch thick calcium silicate, 6 inch thick cellular glass.

3.4.3.2 Insulation of Pumps

Pumps shall be insulated by forming a box around the pump housing. The box shall be constructed by forming the bottom and sides using joints which do

not leave raw ends of insulation exposed. Bottom and sides shall be banded to form a rigid housing which does not rest on the pump. Joints between top cover and sides shall fit tightly. The top cover shall have a joint forming a female shiplap joint on the side pieces and a male joint on the top cover, making the top cover removable. Two coats of Class I adhesive shall be applied over insulation, including removable sections, with a layer of glass cloth embedded between the coats. A parting line shall be provided between the box and the removable sections allowing the removable sections to be removed without disturbing the insulation coating. The total dry thickness of the finish shall be 1/16 inch. Caulking shall be applied to parting line of the removable sections and penetrations.

3.4.3.3 Other Equipment

a. Insulation shall be formed or fabricated to fit the equipment. To ensure a tight fit on round equipment, edges shall be beveled and joints shall be tightly butted and staggered.

b. Insulation shall be secured in place with bands or wires at intervals as recommended by the manufacturer but not greater than 12 inch centers except flexible cellular which shall be adhered. Insulation corners shall be protected under wires and bands with suitable corner angles.

c. On high vibration equipment, cellular glass insulation shall be set in a coating of bedding compound as recommended by the manufacturer, and joints shall be sealed with bedding compound. Mineral fiber joints shall be filled with finishing cement.

d. Insulation on heads of heat exchangers shall be removable. The removable section joint shall be fabricated using a male-female shiplap type joint. Entire surface of the removable section shall be finished as specified.

e. Exposed insulation corners shall be protected with corner angles.

f. On equipment with ribs, insulation shall be applied over 6 x 6 inch by 12 gauge welded wire fabric which has been cinched in place, or if approved by the Contracting Officer, spot welded to the equipment over the ribs. Insulation shall be secured to the fabric with J-hooks and 2 x 2 inch washers or shall be securely banded or wired in place on 12 inch (maximum) centers.

g. Upon completion of installation of insulation, penetrations shall be caulked. Two coats of Class I adhesive shall be applied over insulation, including removable sections, with a layer of glass cloth embedded between the coats. The total dry thickness of the finish shall be 1/16 inch. Caulking shall be applied to parting line between equipment and removable section insulation.

3.4.4 Equipment Handling Dual Temperature Media

Below and above 60 degrees F: Equipment handling dual temperature media shall be insulated as specified for cold equipment.

3.4.5 Equipment Exposed to Weather

3.4.5.1 Installation

Equipment exposed to weather shall be insulated and finished in accordance with the requirements for ducts exposed to weather in paragraph DUCT INSULATION INSTALLATION.

3.4.5.2 Optional Panels

At the option of the Contractor, prefabricated metal insulation panels may be used in lieu of the insulation and finish previously specified. Thermal performance shall be equal to or better than that specified for field applied insulation. Panels shall be the standard catalog product of a manufacturer of metal insulation panels. Fastenings, flashing, and support system shall conform to published recommendations of the manufacturer for weatherproof installation and shall prevent moisture from entering the insulation. Panels shall be designed to accommodate thermal expansion and to support a 250 pound walking load without permanent deformation or permanent damage to the insulation. Exterior metal cover sheet shall be aluminum and exposed fastenings shall be stainless steel or aluminum.

-- End of Section --

SECTION 15400

PLUMBING, GENERAL PURPOSE

PART 1 GENERAL

1.1 REFERENCES

The publications listed below form a part of this specification to the extent referenced. The publications are referred to in the text by basic designation only.

AIR CONDITIONING AND REFRIGERATION INSTITUTE (ARI)

ARI 700	(1995) Specifications for Fluorocarbon and Other Refrigerants
ARI 1010	(1994) Self-Contained, Mechanically-Refrigerated Drinking-Water Coolers

AMERICAN SOCIETY FOR TESTING AND MATERIALS (ASTM)

ASTM A 47	(1990; R 1995) Ferritic Malleable Iron Castings
ASTM A 47M	(1990; R 1996) Ferritic Malleable Iron Castings
ASTM A 53	(1997) Pipe, Steel, Black and Hot-Dipped, Zinc-Coated, Welded and Seamless
ASTM A 74	(1996) Cast Iron Soil Pipe and Fittings
ASTM A 105/A 105M	(1996) Carbon Steel Forgings for Piping Applications
ASTM A 183	(1983; R 1990) Carbon Steel Track Bolts and Nuts
ASTM A 193/A 193M	(1997a) Alloy-Steel and Stainless Steel Bolting Materials for High-Temperature Service
ASTM A 515/A 515M	(1992) Pressure Vessel Plates, Carbon Steel, for Intermediate- and Higher-Temperature Service
ASTM A 516/A 516M	(1990; R 1996) Pressure Vessel Plates, Carbon Steel, for Moderate- and

	Lower-Temperature Service
ASTM A 518	(1992; R 1997) Corrosion-Resistant High-Silicon Iron Castings
ASTM A 518M	(1992; R 1997) Corrosion-Resistant High-Silicon Iron Castings (Metric)
ASTM A 536	(1984; R 1993) Ductile Iron Castings
ASTM A 733	(1993) Welded and Seamless Carbon Steel and Austenitic Stainless Steel Pipe Nipples
ASTM A 888	(1996) Hubless Cast Iron Soil Pipe and Fittings for Sanitary and Storm Drain, Waste, and Vent Piping Applications
ASTM B 32	(1996) Solder Metal
ASTM B 42	(1996) Seamless Copper Pipe, Standard Sizes
ASTM B 43	(1996) Seamless Red Brass Pipe, Standard Sizes
ASTM B 75	(1995a) Seamless Copper Tube
ASTM B 88	(1996) Seamless Copper Water Tube
ASTM B 88M	(1996) Seamless Copper Water Tube (Metric)
ASTM B 152	(1994) Copper Sheet, Strip, Plate, and Rolled Bar
ASTM B 152M	(1994) Copper Sheet, Strip, Plate, and Rolled Bar (Metric)
ASTM B 306	(1996) Copper Drainage Tube (DWV)
ASTM B 370	(1992) Copper Sheet and Strip for Building Construction
ASTM B 584	(1996) Copper Alloy Sand Castings for General Applications
ASTM B 641	(1993) Seamless and Welded Copper Distribution Tube (Type D)
ASTM B 813	(1993) Liquid and Paste Fluxes for Soldering Applications of Copper and Copper Alloy Tube
ASTM B 828	(1992) Making Capillary Joints by Soldering of Copper and Copper Alloy Tube and Fittings

ASTM C 564	(1995a) Rubber Gaskets for Cast Iron Soil Pipe and Fittings
ASTM C 920	(1995) Elastomeric Joint Sealants
ASTM D 1248	(1984; R 1989) Polyethylene Plastics Molding and Extrusion Materials
ASTM D 2000	(1996) Rubber Products in Automotive Applications
ASTM D 2822	(1991; R 1997) Asphalt Roof Cement
ASTM D 2996	(1995) Filament-Wound "Fiberglass" (Glass-Fiber-Reinforced Thermosetting-Resin) Pipe
ASTM D 3139	(1996a) Joints for Plastic Pressure Pipes Using Flexible Elastomeric Seals
ASTM D 3212	(1996a) Joints for Drain and Sewer Plastic Pipes Using Flexible Elastomeric Seals
ASTM D 3308	(1991a) PTFE Resin Skived Tape
ASTM E 1	(1995) ASTM Thermometers
ASTM F 477	(1995) Elastomeric Seals (Gaskets) for Joining Plastic Pipe

AMERICAN SOCIETY OF HEATING, REFRIGERATING AND AIR-CONDITIONING ENGINEERS (ASHRAE)

ASHRAE 34	(1992; Addenda a-j) Number Designation and Safety Classification of Refrigerants
ASHRAE 90.1	(1989; 90.1b; 90.1c; 90.1d; 90.1e; 90.1g; 90.1i) Energy Efficient Design of New Buildings Except Low-Rise Residential Buildings

AMERICAN SOCIETY OF SANITARY ENGINEERING (ASSE)

ASSE ANSI/ASSE 1001	(1990) Pipe Applied Atmospheric Type Vacuum Breakers
ASSE ANSI/ASSE 1003	(1995) Water Pressure Reducing Valves for Domestic Water Supply Systems
ASSE 1005	(1986) Water Heater Drain Valves - 3/4-Inch Iron Pipe Size
ASSE ANSI/ASSE 1011	(1995) Hose Connection Vacuum Breakers

ASSE ANSI/ASSE 1012	(1995) Backflow Preventers with Intermediate Atmospheric Vent
ASSE 1013	(1993) Reduced Pressure Principle Backflow Preventers
ASSE 1018	(1986) Trap Seal Primer Valves Water Supply Fed
ASSE ANSI/ASSE 1037	(1986; Rev thru Mar 1990) Pressurized Flushing Devices (Flushometers) for Plumbing Fixtures

AMERICAN WATER WORKS ASSOCIATION (AWWA)

AWWA-01	(1995) Standard Methods for the Examination of Water and Wastewater
AWWA B300	(1992) Hypochlorites
AWWA B301	(1992) Liquid Chlorine
AWWA ANSI/AWWA C105/A21.5	(1993) Polyethylene Encasement for Ductile-Iron Pipe Systems
AWWA C203	(1991) Coal-Tar Protective Coatings and Linings for Steel Water Pipelines - Enamel and Tape - Hot-Applied
AWWA C606	(1987) Grooved and Shouldered Joints
AWWA ANSI/AWWA C700	(1995) Cold-Water Meters - Displacement Type, Bronze Main Case
AWWA D100	(1996) Welded Steel Tanks for Water Storage
AWWA M20	(1973) Manual: Water Chlorination Principles and Practices

AMERICAN WELDING SOCIETY (AWS)

AWS A5.8	(1992) Filler Metals for Brazing and Braze Welding
AWS B2.2	(1991) Brazing Procedure and Performance Qualification

CAST IRON SOIL PIPE INSTITUTE (CISPI)

CISPI 301	(1995) Hubless Cast Iron Soil Pipe and Fittings for Sanitary and Storm Drain, Waste, and Vent Piping Applications

CISPI 310	(1995) Coupling for Use in Connection with Hubless Cast Iron Soil Pipe and Fittings for Sanitary and Storm Drain, Waste, and Vent Piping Applications
CISPI HSN-85	(1985) Neoprene Rubber Gaskets for Hub and Spigot Cast Iron Soil Pipe and Fittings

CODE OF FEDERAL REGULATIONS (CFR)

10 CFR 430	Energy Conservation Program for Consumer Products

COMMERCIAL ITEM DESCRIPTIONS (CID)

CID A-A-240	(Rev A) Shower Head, Ball Joint

COPPER DEVELOPMENT ASSOCIATION (CDA)

CDA-02	(1995) Copper Tube Handbook

COUNCIL OF AMERICAN BUILDING OFFICIALS (CABO)

CABO A117.1	(1992; Errata Jun 1993) Accessible and Usable Buildings and Facilities

FOUNDATION FOR CROSS-CONNECTION CONTROL AND HYDRAULIC RESEARCH (FCCHR)

FCCCHR-01	(1993) Manual of Cross-Connection Control

HYDRAULIC INSTITUTE (HI)

HI ANSI/HI 1.1-1.5	(1994) Centrifugal Pumps

MANUFACTURERS STANDARDIZATION SOCIETY OF THE VALVE AND FITTINGS INDUSTRY (MSS)

MSS SP-25	(1998) Standard Marking System for Valves, Fittings, Flanges and Unions
MSS SP-44	(1996) Steel PipeLine Flanges
MSS SP-58	(1993) Pipe Hangers and Supports - Materials, Design and Manufacture
MSS SP-67	(1995) Butterfly Valves
MSS SP-69	(1996) Pipe Hangers and Supports - Selection and Application
MSS SP-70	(1990) Cast Iron Gate Valves, Flanged and Threaded Ends

MSS SP-71 (1997) Cast Iron Swing Check Valves, Flanges and Threaded Ends

MSS SP-72 (1992) Ball Valves with Flanged or Butt-Welding Ends for General Service

MSS SP-73 (1991; R 1996) Brazing Joints for Copper and Copper Alloy Pressure Fittings

MSS SP-78 (1987; R 1992) Cast Iron Plug Valves, Flanged and Threaded Ends

MSS SP-80 (1997) Bronze Gate, Globe, Angle and Check Valves

MSS SP-83 (1995) Class 3000 Steel Pipe Unions Socket-Welding and Threaded

MSS SP-85 (1994) Cast Iron Globe & Angle Valves, Flanged and Threaded Ends

MSS SP-110 (1996) Ball Valves Threaded, Socket-Welding, Solder Joint, Grooved and Flared Ends

NATIONAL ASSOCIATION OF PLUMBING-HEATING-COOLING CONTRACTORS (NAPHCC)

NAPHCC-01 (1996) National Standard Plumbing Code

NATIONAL ELECTRICAL MANUFACTURERS ASSOCIATION (NEMA)

NEMA 250 (1991) Enclosures for Electrical Equipment (1000 Volts Maximum)

NATIONAL FIRE PROTECTION ASSOCIATION (NFPA)

NFPA 90A (1996) Installation of Air Conditioning and Ventilating Systems

NSF INTERNATIONAL (NSF)

NSF ANSI/NSF 14 (1996) Plastics Piping Components and Related Materials

PLASTIC PIPE AND FITTINGS ASSOCIATION (PPFA)

PPFA-01 (1991) Plastic Pipe in Fire Resistive Construction

PLUMBING AND DRAINAGE INSTITUTE (PDI)

PDI WH 201 (1992) Water Hammer Arresters

SOCIETY OF AUTOMOTIVE ENGINEERS (SAE)

SAE J 1508 (1996) Hose Clamps

THE SOCIETY FOR PROTECTIVE COATING (SSPC)

SSPC SP 5 (1994) White Metal Blast Cleaning

UNDERWRITERS LABORATORIES (UL)

UL 174 (1996; Rev thru Nov 1997) Household Electric Storage Tank Water Heater

1.2 STANDARD PRODUCTS

Specified materials and equipment shall be standard products of a manufacturer regularly engaged in the manufacture of such products. Specified equipment shall essentially duplicate equipment that has performed satisfactorily at least two years prior to bid opening.

1.3 PERFORMANCE REQUIREMENTS

1.3.1 Welding

Piping shall be welded in accordance with qualified procedures using performance-qualified welders and welding operators. Procedures and welders shall be qualified in accordance with ASME BPV IX. Welding procedures qualified by others, and welders and welding operators qualified by another employer, may be accepted as permitted by ASME B31.1. The Contracting Officer shall be notified 24 hours in advance of tests, and the tests shall be performed at the work site if practicable. Welders or welding operators shall apply their assigned symbols near each weld they make as a permanent record. Structural members shall be welded in accordance with Section 05090 WELDING, STRUCTURAL.

1.4 ELECTRICAL WORK

Motors, motor controllers and motor efficiencies shall conform to the requirements of Section 16415 ELECTRICAL WORK, INTERIOR. Electrical motor-driven equipment specified herein shall be provided complete with motors. Equipment shall be rated at 60 Hz, single phase, ac unless otherwise indicated. Where a motor controller is not provided in a motor-control center on the electrical drawings, a motor controller shall be as indicated. Motor controllers shall be provided complete with properly sized thermal-overload protection in each ungrounded conductor, auxiliary contact, and other equipment, at the specified capacity, and including an allowable service factor.

1.5 SUBMITTALS

Government approval is required for submittals with a "GA" designation; submittals having an "FIO" designation are for information only. The following shall be submitted in accordance with Section 01330 SUBMITTAL

PROCEDURES:

SD-01 Data

Welding; FIO.

A copy of qualified procedures and a list of names and identification symbols of qualified welders and welding operators.

Vibration-Absorbing Features; GA.

Details of vibration-absorbing features, including arrangement, foundation plan, dimensions and specifications.

SD-04 Drawings

Plumbing System; GA.

Detail drawings consisting of illustrations, schedules, performance charts, instructions, brochures, diagrams, and other information to illustrate the requirements and operations of each system. Detail drawings for the complete plumbing system including piping layouts and locations of connections; dimensions for roughing-in, foundation, and support points; schematic diagrams and wiring diagrams or connection and interconnection diagrams. Detail drawings shall indicate clearances required for maintenance and operation. Where piping and equipment are to be supported other than as indicated, details shall include loadings and proposed support methods. Mechanical drawing plans, elevations, views, and details, shall be drawn to scale.

Electrical Schematics; GA.

Complete electrical schematic lineless or full line interconnection and connection diagram for each piece of mechanical equipment having more than one automatic or manual electrical control device.

Coordination Drawings; FIO.

The Mechanical Contractor shall prepare Coordination Drawings showing all of the work (equipment, piping, ductwork, conduit, etc.) to be installed as part of his work. The Coordination Drawings shall be on reproducible transparencies at not less than 3/8 inch = 1 ft.-0 inch scale.

The plumbing contractor shall show all of the work associated with this section of the specifications in the sequence prescribed below. The sequence of coordination drawings shall be HVAC-PLBG-FP-ELEC-GC unless otherwise determined by the Contracting Officer or the General Contractor.

The plumbing shall attend a series of meetings arranged by the General Contractor to resolve any real or apparent interferences or conflicts with the work of the other Contractors or with ceiling heights shown on the drawings.

The plumbing contractor shall then make adjustments to his work on the

Coordination Drawings to resolve any real or apparent interferences or conflicts.

After any real or apparent interferences and conflicts have been incorporated into the Coordination Drawings, the plumbing contractor shall "sign-off" the final Coordination Drawings.

The plumbing contractor shall not install any of his work prior to "sign-off" of final Coordination Drawings. If the work specified in this section proceeds prior to sign-off of Coordination Drawings, any change to this work to correct the interferences and conflicts which result will be made by the plumbing contractor at no additional cost to the project.

Coordination Drawings are for all contractor's use during construction and shall not be construed as replacing any shop, "as-built", or Record Drawings required elsewhere in these Contract Documents.

Review of Coordination Drawings shall not relieve any contractor from his overall responsibility for coordination of all work performed pursuant to the Contract or from any other requirements of the Contract.

SD-06 Instructions

Plumbing System; GA.

Diagrams, instructions, and other sheets proposed for posting. Manufacturer's recommendations for the installation of bell and spigot and hubless joints for cast iron soil pipe.

SD-09 Reports

Tests, Flushing and Disinfection ; FIO.

Test reports in booklet form showing all field tests performed to adjust each component and all field tests performed to prove compliance with the specified performance criteria, completion and testing of the installed system. Each test report shall indicate the final position of controls.

Backflow Prevention Assembly Tests; FIO.

Certification of proper operation shall be as accomplished in accordance with state regulations by an individual certified by the state to perform such tests. If no state requirement exists, the Contractor shall have the manufacturer's, representative or authorized BFPA Tester, test the device, to ensure the unit is properly installed and performing as intended. The Contractor shall provide written documentation of the tests performed and signed by the individual performing the tests.

SD-13 Certificates

Materials and Equipment; GA.

Where materials or equipment are specified to comply with requirements of AGA, or ASME, proof of such compliance. The label or listing of the

specified agency will be acceptable evidence. In lieu of the label or listing, a written certificate may be submitted from an approved, nationally recognized testing organization equipped to perform such services, stating that the items have been tested and conform to the requirements and testing methods of the specified agency. Where equipment is specified to conform to requirements of the ASME Boiler and Pressure Vessel Code, the design, fabrication, and installation shall conform to the code.

Bolts; GA.

Written certification by the bolt manufacturer that the bolts furnished comply with the specified requirements. The certification shall include illustrations of product-required markings, the date of manufacture, and the number of each type of bolt to be furnished based on this certification.

SD-19 Operation and Maintenance Manuals

Plumbing System; GA.

Six copies of the operation manual outlining the step-by-step procedures required for system startup, operation and shutdown. The manual shall include the manufacturer's name, model number, service manual, parts list, and brief description of all equipment and their basic operating features. Six copies of the maintenance manual listing routine maintenance procedures, possible breakdowns and repairs. The manual shall include piping and equipment layout and simplified wiring and control diagrams of the system as installed.

1.6 REGULATORY REQUIREMENTS

Plumbing work shall be in accordance with NAPHCC-01, and these specifications. Provide all miscellaneous items for a complete job.

1.7 PROJECT/SITE CONDITIONS

The Contractor shall become familiar with details of the work, verify dimensions in the field, and advise the Contracting Officer of any discrepancy before performing any work.

1.8 QUALIFICATIONS

Procedures and welders shall be qualified in accordance with the code under which the welding is specified to be accomplished.

PART 2 PRODUCTS

2.1 MATERIALS

Materials for various services shall be in accordance with TABLES I and II. Pipe schedules shall be selected based on service requirements. Pipe fittings shall be compatible with the applicable pipe materials. Plastic pipe, fittings, and solvent cement shall meet NSF ANSI/NSF 14 and shall be NSF listed for the service intended. Plastic pipe, fittings, and solvent

cement used for potable hot and cold water service shall bear the NSF seal "NSF-PW." Polypropylene pipe and fittings shall conform to dimensional requirements of Schedule 40, Iron Pipe size. Pipe threads (except dry seal) shall conform to ASME B1.20.1. Grooved pipe couplings and fittings shall be from the same manufacturer. Material or equipment containing lead shall not be used in any potable water system. Hubless cast-iron soil pipe shall not be installed underground, under concrete floor slabs, or in crawl spaces below kitchen floors. Plastic pipe shall not be installed in air plenums. Plastic pipe shall not be installed in a pressure piping system in buildings greater than three stories including any basement levels.

2.1.1 Pipe Joint Materials

Grooved pipe and hubless cast-iron soil pipe shall not be used under ground. Joints and gasket materials shall conform to the following:

a. Coupling for Cast-Iron Pipe: for hub and spigot type ASTM A 74, AWWA C606. For hubless type: CISPI 310

b. Coupling for Steel Pipe: AWWA C606.

c. Couplings for Grooved Pipe: Malleable Iron ASTM A 47, Grade 32510.

d. Flange Gaskets: Gaskets shall be made of non-asbestos material in accordance with ASME B16.21. Gaskets shall be flat, 1/16 inch thick, and contain Aramid fibers bonded with Styrene Butadiene Rubber (SBR) or Nitro Butadiene Rubber (NBR). Gaskets shall be the full face or self centering flat ring type. Gaskets used for hydrocarbon service shall be bonded with NBR.

e. Neoprene Gaskets for Hub and Cast-Iron Pipe and Fittings: CISPI HSN-85.

f. Brazing Material: Brazing material shall conform to AWS A5.8, BCuP-5.

g. Brazing Flux: Flux shall be in paste or liquid form appropriate for use with brazing material. Flux shall be as follows: lead-free; have a 100 percent flushable residue; contain slightly acidic reagents; contain potassium borides; and contain fluorides. Silver brazing materials shall be in accordance with AWS A5.8.

h. Solder Material: Solder metal shall conform to ASTM B 32 95-5 tin-antimony.

i. Solder Flux: Flux shall be liquid form, non-corrosive, and conform to ASTM B 813, Standard Test 1.

j. PTFE Tape: PTFE Tape, for use with Threaded Metal Pipe, ASTM D 3308.

k. Rubber Gaskets for Cast-Iron Soil-Pipe and Fittings (hub and spigot type and hubless type): ASTM C 564.

l. Rubber Gaskets for Grooved Pipe: ASTM D 2000, maximum temperature 230 degrees F.

m. Flexible Elastomeric Seals: ASTM D 3139, ASTM D 3212 or ASTM F 477.

n. Bolts and Nuts for Grooved Pipe Couplings: Heat-treated carbon steel, ASTM A 183.

o. Flanged fittings including flanges, bolts, nuts, bolt patterns, etc., shall be in accordance with ASME B16.5 class 150 and shall have the manufacturer's trademark affixed in accordance with MSS SP-25. Flange material shall conform to ASTM A 105/A 105M. Blind flange material shall conform to ASTM A 516/A 516M cold service and ASTM A 515/A 515M for hot service. Bolts shall be high strength or intermediate strength with material conforming to ASTM A 193/A 193M.

2.1.2 Miscellaneous Materials

Miscellaneous materials shall conform to the following:

a. Water Hammer Arrester: PDI WH 201.
b. Copper, Sheet and Strip for Building Construction: ASTM B 370.
c. Asphalt Roof Cement: ASTM D 2822.
d. Hose Clamps: SAE J 1508.
e. Supports for Off-The-Floor Plumbing Fixtures: ASME A112.6.1M.
f. Metallic Cleanouts: ASME A112.36.2M.
g. Plumbing Fixture Setting Compound: A preformed flexible ring seal molded from hydrocarbon wax material. The seal material shall be nonvolatile nonasphaltic and contain germicide and provide watertight, gastight, odorproof and verminproof properties.
h. Coal-Tar Protective Coatings and Linings for Steel Water Pipelines: AWWA C203.
i. Hypochlorites: AWWA B300.
j. Liquid Chlorine: AWWA B301.
k. Gauges - Pressure and Vacuum Indicating Dial Type - Elastic Element: ASME B40.1.
l. Thermometers: ASTM E 1.

2.1.3 Pipe Insulation Material

Insulation shall be as specified in Section 15080 THERMAL INSULATION FOR MECHANICAL SYSTEMS.

2.2 PIPE HANGERS, INSERTS, AND SUPPORTS

Pipe hangers, inserts, and supports shall conform to MSS SP-58 and MSS SP-69.

2.3 VALVES

Valves shall be provided on supplies to equipment and fixtures. Valves 2-1/2 inches and smaller shall be bronze with threaded bodies for pipe and solder-type connections for tubing. Valves 3 inches and larger shall have flanged iron bodies and bronze trim. Pressure ratings shall be based upon

the application. Grooved end valves may be provided if the manufacturer certifies that the valves meet the performance requirements of applicable MSS standard. Valves shall conform to the following standards:

Description	Standard
Butterfly Valves	MSS SP-67
Cast-Iron Gate Valves, Flanged and Threaded Ends	MSS SP-70
Cast-Iron Swing Check Valves, Flanged and Threaded Ends	MSS SP-71
Ball Valves with Flanged Butt-Welding Ends for General Service	MSS SP-72
Ball Valves Threaded, Socket-Welding, Solder Joint, Grooved and Flared Ends	MSS SP-110
Cast-Iron Plug Valves, Flanged and Threaded Ends	MSS SP-78
Bronze Gate, Globe, Angle, and Check Valves	MSS SP-80
Steel Valves, Socket Welding and Threaded Ends	ASME B16.34
Cast-Iron Globe and Angle Valves, Flanged and Threaded Ends	MSS SP-85
Backwater Valves	ASME A112.14.1
Vacuum Relief Valves	ASSE ANSI/ASSE 1001
Water Pressure Reducing Valves	ASSE ANSI/ASSE 1003
Water Heater Drain Valves	ASSE 1005
Trap Seal Primer Valves	ASSE 1018
Temperature and Pressure Relief Valves for Hot Water Supply Systems	ANSI Z21.22
Temperature and Pressure Relief Valves for Automatically Fired Hot Water Boilers	ASME CSD-1 Safety Code No., Part CW, Article 5

2.3.1 Backwater Valves

Backwater valves shall be either separate from the floor drain or a combination floor drain, P-trap, and backwater valve, as shown. Valves shall have cast-iron bodies with cleanouts large enough to permit removal of interior parts. Valves shall be of the flap type, hinged or pivoted,

with revolving disks. Hinge pivots, disks, and seats shall be nonferrous metal. Disks shall be slightly open in a no-flow no-backwater condition. Cleanouts shall extend to finished floor and be fitted with threaded countersunk plugs.

2.3.2 Wall Hydrants

Wall hydrants with vacuum-breaker backflow preventer shall have a nickle-brass or nickel-bronze wall plate or flange with nozzle and detachable key handle. A brass or bronze operating rod shall be provided within a galvanized iron casing of sufficient length to extend through the wall so that the valve is inside the building, and the portion of the hydrant between the outlet and valve is self-draining. A brass or bronze valve with coupling and union elbow having metal-to-metal seat shall be provided. Valve rod and seat washer shall be removable through the face of the hydrant. The hydrant shall have 3/4 inch exposed hose thread on spout and 3/4 inch male pipe thread on inlet.

2.3.3 Relief Valves

Water heaters and hot water storage tanks shall have a combination pressure and temperature (P&T) relief valve. The pressure relief element of a P&T relief valve shall have adequate capacity to prevent excessive pressure buildup in the system when the system is operating at the maximum rate of heat input. The temperature element of a P&T relief valve shall have a relieving capacity which is at least equal to the total input of the heaters when operating at their maximum capacity. Relief valves shall be rated according to ANSI Z21.22. Relief valves for systems where the maximum rate of heat input is less than 200,000 Btuh shall have 3/4 inch minimum inlets, and 3/4 inch outlets. Relief valves for systems where the maximum rate of heat input is greater than 200,000 Btuh shall have 1 inch minimum inlets, and 1 inch outlets. The discharge pipe from the relief valve shall be the size of the valve outlet.

2.3.4 Thermostatic Mixing Valves

Mixing valves, thermostatic type, shall be line size and shall be constructed with rough or finish bodies either with or without plating. Each valve shall be constructed to control the mixing of hot and cold water and to deliver water at a desired temperature regardless of pressure or input temperature changes. The control element shall be of an approved type. The body shall be of heavy cast bronze, and interior parts shall be brass, bronze, or copper. The valve shall be equipped with necessary stops, check valves, unions, and sediment strainers on the inlets. Mixing valves shall maintain water temperature within 5 degrees F of any setting.

2.4 FIXTURES

Fixtures shall be water conservation type, in accordance with NAPHCC-01. Fixtures for use by the physically handicapped shall be in accordance with CABO A117.1. Vitreous china, nonabsorbent, hard-burned, and vitrified throughout the body shall be provided. Porcelain enameled ware shall have specially selected, clear white, acid-resisting enamel coating evenly applied on surfaces. No fixture will be accepted that shows cracks,

crazes, blisters, thin spots, or other flaws. Fixtures shall be equipped with appurtenances such as traps, faucets, stop valves, and drain fittings. Each fixture and piece of equipment requiring connections to the drainage system, except grease interceptors, shall be equipped with a trap. Brass expansion or toggle bolts capped with acorn nuts shall be provided for supports, and polished chromium-plated pipe, valves, and fittings shall be provided where exposed to view. Fixtures with the supply discharge below the rim shall be equipped with backflow preventers. Internal parts of flush and/or flushometer valves, shower mixing valves, shower head face plates, pop-up stoppers of lavatory waste drains, and pop-up stoppers and overflow tees and shoes of bathtub waste drains may contain acetal resin, fluorocarbon, nylon, acrylonitrile-butadiene-styrene (ABS) or other plastic material, if the material has provided satisfactory service under actual commercial or industrial operating conditions for not less than 2 years. Plastic in contact with hot water shall be suitable for 180 degrees F water temperature. Plumbing fixtures shall be as indicated in paragraph PLUMBING FIXTURE SCHEDULE.

2.4.1 Lavatories

Enameled cast-iron lavatories shall be provided with two cast-iron or steel brackets secured to the underside of the apron and drilled for bolting to the wall in a manner similar to the hanger plate. Exposed brackets shall be porcelain enameled. Vitreous china lavatories shall be provided with two integral molded lugs on the back-underside of the fixture and drilled for bolting to the wall in a manner similar to the hanger plate.

2.4.2 Flushing System

Flushing devices shall be provided as described in paragraph FIXTURES AND FIXTURE TRIMMINGS.

2.5 BACKFLOW PREVENTERS

Backflow preventers shall be approved and listed by the Foundation For Cross-Connection Control & Hydraulic Research. Reduced pressure principle assemblies, double check valve assemblies, atmospheric (nonpressure) type vacuum breakers, and pressure type vacuum breakers shall be tested, approved, and listed in accordance with FCCCHR-01. Backflow preventers with intermediate atmospheric vent shall conform to ASSE ANSI/ASSE 1012. Reduced pressure principle backflow preventers shall conform to ASSE 1013. Hose connection vacuum breakers shall conform to ASSE ANSI/ASSE 1011. Pipe applied atmospheric type vacuum breakers shall conform to ASSE ANSI/ASSE 1001. Air gaps in plumbing systems shall conform to ASME A112.1.2.

2.6 DRAINS

2.6.1 Floor and Shower Drains

Floor and shower drains shall consist of a galvanized body, integral seepage pan, and adjustable perforated or slotted chromium-plated bronze, nickel-bronze, or nickel-brass strainer, consisting of grate and threaded collar. Floor drains shall be cast iron except where metallic waterproofing membrane is installed. Drains shall be of double drainage

pattern for embedding in the floor construction. The seepage pan shall have weep holes or channels for drainage to the drainpipe. The strainer shall be adjustable to floor thickness. A clamping device for attaching flashing or waterproofing membrane to the seepage pan without damaging the flashing or waterproofing membrane shall be provided when required. Drains shall be provided with threaded or caulked connection. In lieu of a caulked joint between the drain outlet and waste pipe, a neoprene rubber gasket conforming to ASTM C 564 may be installed, provided that the drain is specifically designed for the rubber gasket compression type joint. Floor and shower drains shall conform to ASME A112.21.1M.

2.6.1.1 Metallic Shower Pan Drains

Where metallic shower pan membrane is installed, polyethylene drain with corrosion-resistant screws securing the clamping device shall be provided. Polyethylene drains shall have fittings to adapt drain to waste piping. Polyethylene for floor drains shall conform to ASTM D 1248. Drains shall have separate cast-iron "P" trap, circular body, seepage pan, and strainer, unless otherwise indicated.

2.6.1.2 Drains and Backwater Valves

Drains and backwater valves installed in connection with waterproofed floors or shower pans shall be equipped with bolted-type device to securely clamp flashing.

2.6.2 Area Drains

Area drains shall be plain pattern with polished stainless steel perforated or slotted grate and bottom outlet. The drain shall be circular or square with a 12 inch nominal overall width or diameter and 10 inch nominal overall depth. Drains shall be cast iron with manufacturer's standard coating. Grate shall be easily lifted out for cleaning. Outlet shall be suitable for inside caulked connection to drain pipe. Drains shall conform to ASME A112.21.1M.

2.6.3 Boiler Room Drains

Boiler room drains shall have combined drain and trap, hinged grate, removable bucket, and threaded brass cleanout with brass backwater valve. The removable galvanized cast-iron sediment bucket shall have rounded corners to eliminate fouling and shall be equipped with hand grips. Drain shall have a minimum water seal of 4 inches. The grate area shall be not less than 100 square inches.

2.6.4 Pit Drains

Pit drains shall consist of a body, integral seepage pan, and nontilting perforated or slotted grate. Drains shall be of double drainage pattern suitable for embedding in the floor construction. The seepage pan shall have weep holes or channels for drainage to the drain pipe. Membrane or flashing clamping device shall be provided when required. Drains shall be cast iron with manufacturer's standard coating. Drains shall be circular and provided with bottom outlet suitable for inside caulked connection,

unless otherwise indicated. Drains shall be provided with separate cast-iron "P" traps, unless otherwise indicated.

2.6.5 Sight Drains

Sight drains shall consist of body, integral seepage pan, and adjustable strainer with perforated or slotted grate and funnel extension. The strainer shall have a threaded collar to permit adjustment to floor thickness. Drains shall be of double drainage pattern suitable for embedding in the floor construction. A clamping device for attaching flashing or waterproofing membrane to the seepage pan without damaging the flashing or membrane shall be provided for other than concrete construction. Drains shall have a galvanized heavy cast-iron body and seepage pan and chromium-plated bronze, nickel-bronze, or nickel-brass strainer and funnel combination. Drains shall be provided with threaded or caulked connection and with a separate cast-iron "P" trap, unless otherwise indicated. Drains shall be circular, unless otherwise indicated. The funnel shall be securely mounted over an opening in the center of the strainer. Minimum dimensions shall be as follows:

Area of strainer and collar	36 square inches
Height of funnel	3-3/4 inches
Diameter of lower portion of funnel	2 inches
Diameter of upper portion of funnel	4 inches

2.6.6 Roof Drains and Expansion Joints

Roof drains shall conform to ASME A112.21.2M, with dome and integral flange, and shall have a device for making a watertight connection between roofing and flashing. The whole assembly shall be galvanized heavy pattern cast iron. For aggregate surface roofing, the drain shall be provided with a gravel stop. On roofs other than concrete construction, roof drains shall be complete with underdeck clamp, sump receiver, and an extension for the insulation thickness where applicable. A clamping device for attaching flashing or waterproofing membrane to the seepage pan without damaging the flashing or membrane shall be provided when required to suit the building construction. Strainer openings shall have a combined area equal to twice that of the drain outlet. The outlet shall be equipped to make a proper connection to threaded pipe of the same size as the downspout. An expansion joint of proper size to receive the conductor pipe shall be provided. The expansion joint shall consist of a heavy cast-iron housing, brass or bronze sleeve, brass or bronze fastening bolts and nuts, and gaskets or packing. The sleeve shall have a nominal thickness of not less than 0.134 inch. Gaskets and packing shall be close-cell neoprene, O-ring packing shall be close-cell neoprene of 70 durometer. Packing shall be held in place by a packing gland secured with bolts.

2.7 SHOWER PAN

Shower pan shall be copper. Provide copper shower pans fabricated from sheet copper as specified below, and fabricated in conformance with requirements specified in Section 07600 SHEET METALWORK, GENERAL, Section 07610 COPPER SHEET METAL FLASHING and with the SMACNA Manual. See Architectural Drawings for locations.

2.7.1 Sheet Copper

Sheet copper shall be 16 ounce weight.

2.8 TRAPS

Unless otherwise specified, traps shall be copper-alloy adjustable tube type with slip joint inlet and swivel. Traps shall be without a cleanout. Tubes shall be copper alloy with walls not less than 0.032 inch thick within commercial tolerances, except on the outside of bends where the thickness may be reduced slightly in manufacture by usual commercial methods. Inlets shall have rubber washer and copper alloy nuts for slip joints above the discharge level. Swivel joints shall be below the discharge level and shall be of metal-to-metal or metal-to-plastic type as required for the application. Nuts shall have flats for wrench grip. Outlets shall have internal pipe thread, except that when required for the application, the outlets shall have sockets for solder-joint connections. The depth of the water seal shall be not less than 2 inches. The interior diameter shall be not more than 1/8 inch over or under the nominal size, and interior surfaces shall be reasonably smooth throughout. A copper alloy "P" trap assembly consisting of an adjustable "P" trap and threaded trap wall nipple with cast brass wall flange shall be provided for lavatories. The assembly shall be a standard manufactured unit and may have a rubber-gasketed swivel joint.

2.9 WATER HEATERS

Water heater types and capacities shall be as indicated on Drawings. Each primary water heater shall have controls with an adjustable range that includes 90 to 120 degrees F. Each gas-fired water heater and booster water heater shall have controls with an adjustable range that includes 120 to 180 degrees F. Hot water systems utilizing recirculation systems shall be tied into building off-hour controls. The thermal efficiencies and standby heat losses shall conform to TABLE III for each type of water heater specified. The only exception is that storage water heaters and hot water storage tanks having more than 500 gallons storage capacity need not meet the standard loss requirement if the tank surface area is not insulated to R-12.5 and if a standing light is not used. Plastic materials polyetherimide (PEI) and polyethersulfone (PES) are forbidden to be used for vent piping of combustion gases.

2.9.1 Automatic Storage Type

Heaters shall be complete with control system, temperature gauge, and pressure gauge, and shall have ASME rated combination pressure and temperature relief valve.

2.9.1.1 Electric Type

Electric type water heaters shall conform to UL 174 with dual heating elements. The elements shall be wired so that only one element can operate at a time.

2.10 HOT-WATER STORAGE TANKS

Hot-water storage tanks shall be constructed by one manufacturer, ASME stamped for the working pressure, and shall have the National Board (ASME) registration. The tank shall be cement-lined or glass-lined steel type in accordance with AWWA D100. The heat loss shall conform to TABLE III as determined by the requirements of ASHRAE 90.1. Each tank shall be equipped with a thermometer, conforming to ASTM E 1, Type I, Class 3, Range C, style and form as required for the installation, and with 7 inch scale. Thermometer shall have a separable socket suitable for a 3/4 inch tapped opening. Tanks shall be equipped with a pressure gauge 6 inch minimum diameter face. Insulation shall be as specified in Section 15080 THERMAL INSULATION FOR MECHANICAL SYSTEMS. Storage tank capacity shall be as shown.

2.11 PUMPS

2.11.1 Sump Pumps

Sump pumps shall be of capacities indicated. The pumps shall be of the automatic, electric motor-driven, submerged type, complete with necessary control equipment and with a split or solid cast-iron or steel cover plate. The pumps shall be direct-connected by an approved flexible coupling to a vertical electric motor having a continuous oiling device or packed bearings sealed against dirt and moisture. Motors shall be totally enclosed, fan-cooled of sizes as indicated and shall be equipped with an across-the-line magnetic controller in a NEMA 250, Type 4 enclosed, across-the-line, magnetic controller. Each pump shall be fitted with a high-grade thrust bearing mounted above the floor. Each shaft shall have an alignment bearing at each end, and the suction inlet shall be between 3 and 6 inches above the sump bottom. The suction side of each pump shall have a strainer of ample capacity. A float switch assembly, with the switch completely enclosed in a NEMA 250, Type 4 enclosure, shall start and stop each motor at predetermined water levels. Duplex pumps shall be equipped with an automatic alternator to change the lead operation from one pump to the other, and for starting the second pump if the flow exceeds the capacity of the first pump. The discharge line from each pump shall be provided with a union or flange, a nonclog swing check valve, and a stop valve in an accessible location near the pump.

2.11.2 Circulating Pumps

Domestic hot water circulating pumps shall be electrically driven, single-stage, centrifugal, with mechanical seals, suitable for the intended service. Pump capacities, efficiencies, motor sizes, speeds, and impeller types shall be as shown. Pump and motor shall be supported by the piping on which it is installed. The shaft shall be one-piece, heat-treated, corrosion-resisting steel with impeller and smooth-surfaced housing of bronze. Motor shall be totally enclosed, fan-cooled and shall have sufficient horsepower for the service required. Pump shall conform to HI

ANSI/HI 1.1-1.5. Each pump motor shall be equipped with an across-the-line magnetic controller in a NEMA 250, Type 1 enclosure with "START-STOP" switch in cover. Pump motors smaller than Fractional horsepower pump motors shall have integral thermal overload protection in accordance with Section 16415 ELECTRICAL WORK, INTERIOR. Guards shall shield exposed moving parts.

2.11.3 Booster Pumps

2.11.3.1 Centrifugal Pumps

Booster pumps shall be provided. The capacities shall be as shown, and the speed shall not exceed 1800 rpm. Pumps shall have a casing of close-grained iron or steel with smooth water passages. A gasket shall be provided between the upper and lower halves of the casing. Suction and discharge connections shall be flanged. Impellers shall be nonoverloading, bronze, balanced to eliminate vibration, and shall be keyed to corrosion-resisting steel shafts. The casings shall be fitted with bronze wearing or sealing rings. Bearings shall be cartridge type, enabling the entire rotating element to be removed without disturbing alignment or exposing the bearings to dirt, water, and other foreign matter. Pumps shall be provided with mechanical seals. Seal boxes shall be machined in the pump casing and at both sides of the pump, and shall be of sufficient depth to include a conventional bronze seal ring and rows of shaft packing. Bedplates shall be close-grain cast iron or steel with ribs and lugs, complete with foundation bolts, and shall have a drip lip with drain hole. Each pump shall be tested at the manufacturer's plant for operating characteristics at the rated capacity and under specified operating conditions. Test curves shall be furnished showing capacity in gpm, head in feet, efficiency, brake horsepower, and operation in parallel with similar pumps. Multiple pump installations shall have pump characteristics compatible for operation in parallel with similar pumps. The electric motor shall be sized for non-overload when operating at any point along the characteristic curve of the pump. Guards shall shield exposed belts and moving parts.

2.11.3.2 Controls

Each pump motor shall be provided with enclosed across-the-line-type magnetic controller complete in a NEMA 250 Type 1 enclosure with three position, "HAND-OFF-AUTOMATIC," selector switch in cover. Pumps shall be automatically started and stopped by float or pressure switches, as indicated. The pumps shall start and stop at the levels and pressures indicated.

2.11.4 Flexible Connectors

Flexible connectors shall be provided at the suction and discharge of each pump that is 1 hp or larger. Connectors shall be constructed of neoprene, rubber, or braided bronze, with Class 150 standard flanges. Flexible connectors shall be line size and suitable for the pressure and temperature of the intended service.

2.12 WATER PRESSURE BOOSTER SYSTEM

2.12.1 Variable Flow Pumping System

Pumping system with pressure-regulating valves shall employ one lead pump for low flows, and one or more lag pumps for higher flows. Pressure-regulating valves shall be provided with nonslam check feature. The factory prepiped and prewired assembly shall be mounted on a steel frame, complete with pumps, motors, and automatic controls. The system capacity and capacity of individual pumps shall be as indicated. Current sensing relays shall provide staging of the pumps. The pumps shall be protected from thermal buildup, when running at no-flow, by a common thermal relief valve. Pressure gauges shall be mounted on the suction and discharge headers. The control panel shall bear the UL listing label for industrial control panels and shall be in a NEMA 250, Type 1 enclosure. The control panel shall include the following: No-flow shutdown; 7-day time clock; audiovisual alarm; external resets; manual alternation; magnetic motor controllers; time delays; transformer; current relays; "HAND-OFF-AUTOMATIC" switches for each pump; minimum run timers; low suction pressure cutout; and indicating lights for power on, individual motor overload, and low suction pressure. The control circuit shall be interlocked so that the failure of any controller shall energize the succeeding controller.

2.12.2 Hydro-Pneumatic Water Pressure System

An ASME code constructed tank stamped for 125 psig water working pressure shall be provided. The tank shall have a flexible diaphragm made of material conforming to FDA requirements for use with potable water and shall be factory precharged to meet required system pressure. Plumbing contractor shall verify system pressure after installation; adjust as required.

2.13 DOMESTIC WATER SERVICE METER

Cold water meter shall be of the positive displacement type conforming to AWWA ANSI/AWWA C700. Meter register may be round or straight reading type, indicating gallons. Meter shall be provided with a pulse generator, remote readout register and all necessary wiring and accessories.

PART 3 EXECUTION

3.1 GENERAL INSTALLATION REQUIREMENTS

Piping located in air plenums shall conform to NFPA 90A requirements. Plastic pipe shall not be installed in air plenums. Piping located in shafts that constitute air ducts or that enclose air ducts shall be noncombustible in accordance with NFPA 90A. Installation of plastic pipe where in compliance with NFPA may be installed in accordance with PPFA-01. The plumbing system shall be installed complete with necessary fixtures, fittings, traps, valves, and accessories. Water and drainage piping shall be extended 5 feet outside the building, unless otherwise indicated. A full port ball valve and drain shall be installed on the water service line inside the building approximately 6 inches above the floor from point of entry. Piping shall be connected to the exterior service lines or capped

or plugged if the exterior service is not in place. Sewer and water pipes shall be laid in separate trenches, except when otherwise shown. Exterior underground utilities shall be at least 12 inches below the average local frost depth or as indicated on the drawings. If trenches are closed or the pipes are otherwise covered before being connected to the service lines, the location of the end of each plumbing utility shall be marked with a stake or other acceptable means. Valves shall be installed with control no lower than the valve body.

3.1.1 Water Pipe, Fittings, and Connections

3.1.1.1 Utilities

The piping shall be extended to fixtures, outlets, and equipment. The hot-water and cold-water piping system shall be arranged and installed to permit draining. The supply line to each item of equipment or fixture, except faucets, flush valves, or other control valves which are supplied with integral stops, shall be equipped with a shutoff valve to enable isolation of the item for repair and maintenance without interfering with operation of other equipment or fixtures. Supply piping to fixtures, faucets, hydrants, shower heads, and flushing devices shall be anchored to prevent movement.

3.1.1.2 Cutting and Repairing

The work shall be carefully laid out in advance, and unnecessary cutting of construction shall be avoided. Damage to building, piping, wiring, or equipment as a result of cutting shall be repaired by mechanics skilled in the trade involved.

3.1.1.3 Protection of Fixtures, Materials, and Equipment

Pipe openings shall be closed with caps or plugs during installation. Fixtures and equipment shall be tightly covered and protected against dirt, water, chemicals, and mechanical injury. Upon completion of the work, the fixtures, materials, and equipment shall be thoroughly cleaned, adjusted, and operated. Safety guards shall be provided for exposed rotating equipment.

3.1.1.4 Mains, Branches, and Runouts

Piping shall be installed as indicated. Pipe shall be accurately cut and worked into place without springing or forcing. Structural portions of the building shall not be weakened. Aboveground piping shall run parallel with the lines of the building, unless otherwise indicated. Branch pipes from service lines may be taken from top, bottom, or side of main, using crossover fittings required by structural or installation conditions. Supply pipes, valves, and fittings shall be kept a sufficient distance from other work and other services to permit not less than 1/2 inch between finished covering on the different services. Bare and insulated water lines shall not bear directly against building structural elements so as to transmit sound to the structure or to prevent flexible movement of the lines. Water pipe shall not be buried in or under floors unless specifically indicated or approved. Changes in pipe sizes shall be made

with reducing fittings. Use of bushings will not be permitted except for use in situations in which standard factory fabricated components are furnished to accommodate specific excepted installation practice. Change in direction shall be made with fittings, except that bending of pipe 4 inches and smaller will be permitted, provided a pipe bender is used and wide sweep bends are formed. The center-line radius of bends shall be not less than six diameters of the pipe. Bent pipe showing kinks, wrinkles, flattening, or other malformations will not be acceptable.

3.1.1.5 Pipe Drains

Pipe drains indicated shall consist of 3/4 inch hose bibb with renewable seat and ball valve ahead of hose bibb. At other low points, 3/4 inch brass plugs or caps shall be provided. Disconnection of the supply piping at the fixture is an acceptable drain.

3.1.1.6 Expansion and Contraction of Piping

Allowance shall be made throughout for expansion and contraction of water pipe. Each hot-water and hot-water circulation riser shall have expansion loops or other provisions such as offsets, changes in direction, etc., where indicated and/or required. Risers shall be securely anchored as required or where indicated to force expansion to loops. Branch connections from risers shall be made with ample swing or offset to avoid undue strain on fittings or short pipe lengths. Horizontal runs of pipe over 50 feet in length shall be anchored to the wall, roof or the supporting construction about midway on the run to force expansion, evenly divided, toward the ends. Sufficient flexibility shall be provided on branch runouts from mains and risers to provide for expansion and contraction of piping. Flexibility shall be provided by installing one or more turns in the line so that piping will spring enough to allow for expansion without straining. If mechanical grooved pipe coupling systems are provided, the deviation from design requirements for expansion and contraction may be allowed pending approval of Contracting Officer.

3.1.1.7 Commercial-Type Water Hammer Arresters

Commercial-type water hammer arresters shall be provided on hot- and cold-water supplies, with precise location and sizing to be in accordance with PDI WH 201. Water hammer arresters, where concealed, shall be accessible by means of access doors or removable panels. Commercial-type water hammer arresters shall conform to PDI WH 201. Vertical capped pipe columns will not be permitted.

3.1.2 Joints

Installation of pipe and fittings shall be made in accordance with the manufacturer's recommendations. Mitering of joints for elbows and notching of straight runs of pipe for tees will not be permitted. Joints shall be made up with fittings of compatible material and made for the specific purpose intended.

3.1.2.1 Threaded

Threaded joints shall have American Standard taper pipe threads conforming to ASME B1.20.1. Only male pipe threads shall be coated with graphite or with an approved graphite compound, or with an inert filler and oil, or shall have a polytetrafluoroethylene tape applied.

3.1.2.2 Mechanical Couplings

Grooved mechanical joints shall be prepared according to the coupling manufacturer's instructions. Pipe and groove dimensions shall comply with the tolerances specified by the coupling manufacturer. The diameter of grooves made in the field shall be measured using a "go/no-go" gauge, vernier or dial caliper, or narrow-land micrometer. Groove width and dimension of groove from end of the pipe shall be measured and recorded for each change in grooving tool setup to verify compliance with coupling manufacturer's tolerances. Grooved joints shall not be used in concealed locations.

3.1.2.3 Union and Flanged

Unions, flanges and mechanical couplings shall not be concealed in walls, ceilings, or partitions. Unions shall be used on pipe sizes 2-1/2 inches and smaller; flanges shall be used on pipe sizes 3 inches and larger.

3.1.2.4 Cast Iron Soil, Waste and Vent Pipe

Bell and spigot compression and hubless gasketed clamp joints for soil, waste and vent piping shall be installed per the manufacturer's recommendations.

3.1.2.5 Copper Tube and Pipe

The tube or fittings shall not be annealed when making connections. Connections shall be made with a multiflame torch.

a. Brazed. Brazed joints shall be made in conformance with AWS B2.2, MSS SP-73, and CDA-02 with flux and are acceptable for line sizes. Copper to copper joints shall include the use of copper-phosphorus or copper-phosphorus-silver brazing metal without flux. Brazing of dissimilar metals (copper to bronze or brass) shall include the use of flux with either a copper-phosphorus, copper-phosphorus-silver or a silver brazing filler metal.

b. Soldered. Soldered joints shall be made with flux and are only acceptable for lines 2 inches and smaller. Soldered joints shall conform to ASME B31.5 and CDA-02.

c. Copper Tube Extracted Joint. An extracted mechanical joint may be made in copper tube. Joint shall be produced with an appropriate tool by drilling a pilot hole and drawing out the tube surface to form a collar having a minimum height of three times the thickness of the tube wall. To prevent the branch tube from being inserted beyond the depth of the extracted joint, dimpled depth stops shall be provided. Branch tube shall be notched for proper penetration

into fitting to ensure a free flow joint. Extracted joints shall be brazed in accordance with NAPHCC-01 using B-Cup series filler metal in accordance with MSS SP-73. Soldered extracted joints will not be permitted.

3.1.2.6 Other Joint Methods

3.1.3 Dissimilar Pipe Materials

Connections between ferrous and non-ferrous copper pipe shall be made with dielectric unions or flange waterways. Connecting joints between plastic and metallic pipe shall be made with transition fitting for the specific purpose.

3.1.4 Corrosion Protection for Buried Pipe and Fittings

3.1.4.1 Cast Iron and Ductile Iron

Pressure pipe shall have protective coating, a cathodic protection system, and joint bonding. Pipe, fittings, and joints shall have a protective coating. The protective coating shall be completely encasing polyethylene tube or sheet in accordance with AWWA ANSI/AWWA C105/A21.5. Joints and fittings shall be cleaned, coated with primer, and wrapped with tape. The pipe shall be cleaned, coated, and wrapped prior to pipe tightness testing. Joints and fittings shall be cleaned, coated, and wrapped after pipe tightness testing. Tape shall conform to AWWA C203 and shall be applied with a 50 percent overlap. Primer shall be as recommended by the tape manufacturer.

3.1.4.2 Steel

Steel pipe, joints, and fittings shall be cleaned, coated with primer, and wrapped with tape. Pipe shall be cleaned, coated, and wrapped prior to pipe tightness testing. Joints and fittings shall be cleaned, coated, and wrapped after pipe tightness testing. Tape shall conform to AWWA C203 and shall be applied with a 50 percent overlap. Primer shall be as recommended by the tape manufacturer.

3.1.5 Pipe Sleeves and Flashing

Pipe sleeves shall be furnished and set in their proper and permanent location.

3.1.5.1 Sleeve Requirements

Pipes passing through concrete or masonry walls or concrete floors or roofs shall be provided with pipe sleeves fitted into place at the time of construction. Sleeves are not required for cast-iron soil pipe passing through concrete slab on grade, except where penetrating a membrane waterproof floor. A modular mechanical type sealing assembly may be installed in lieu of a waterproofing clamping flange and caulking and sealing of annular space between pipe and sleeve. The seals shall consist of interlocking synthetic rubber links shaped to continuously fill the annular space between the pipe and sleeve with corrosion-protected carbon

steel bolts, nuts, and pressure plates. The links shall be loosely assembled with bolts to form a continuous rubber belt around the pipe with a pressure plate under each bolt head and each nut. After the seal assembly is properly positioned in the sleeve, tightening of the bolt shall cause the rubber sealing elements to expand and provide a watertight seal between the pipe and the sleeve. Each seal assembly shall be sized as recommended by the manufacturer to fit the pipe and sleeve involved. Sleeves shall not be installed in structural members, except where indicated or approved. Rectangular and square openings shall be as detailed. Each sleeve shall extend through its respective floor, or roof, and shall be cut 1 inch above each surface, except for special circumstances. Pipe sleeves passing through floors in wet areas such as mechanical equipment rooms, lavatories, kitchens, and other plumbing fixture areas shall extend a minimum of 4 inches above the finished floor. Unless otherwise indicated, sleeves shall be of a size to provide a minimum of 1/4 inch clearance between bare pipe and inside of sleeve or between jacket over insulation and sleeves. Sleeves in bearing walls shall be steel pipe or cast-iron pipe. Sleeves for membrane waterproof floors shall be steel pipe or cast-iron pipe. Membrane clamping devices shall be provided on pipe sleeves for waterproof floors. Sleeves in nonbearing walls or ceilings may be steel pipe, cast-iron pipe, galvanized sheet metal with lock-type longitudinal seam, or moisture-resistant fiber or plastic. Plastic sleeves shall not be used in nonbearing fire walls, roofs, or floor/ceilings. Except as otherwise specified, the annular space between pipe and sleeve, or between jacket over insulation and sleeve, shall be sealed as indicated with sealants conforming to ASTM C 920 and with a primer, backstop material and surface preparation as specified in Section 07900 JOINT SEALING. Pipes passing through sleeves in concrete floors over crawl spaces shall be sealed as specified above. The annular space between pipe and sleeve or between jacket over insulation and sleeve shall not be sealed for interior walls which are not designated as fire rated. Sleeves through below-grade walls in contact with earth shall be recessed 1/2 inch from wall surfaces on both sides. Annular space between pipe and sleeve shall be filled with backing material and sealants in the joint between the pipe and concrete or masonry wall as specified above. Sealant selected for the earth side of the wall shall be compatible with dampproofing/waterproofing materials that are to be applied over the joint sealant.

3.1.5.2 Flashing Requirements

Pipes passing through roof or floor waterproofing membrane shall be installed through a 16 ounce copper flashing, each within an integral skirt or flange. Flashing shall be suitably formed, and the skirt or flange shall extend not less than 8 inches from the pipe and shall be set over the roof or floor membrane in a solid coating of bituminous cement. The flashing shall extend up the pipe a minimum of 10 inches. For cleanouts, the flashing shall be turned down into the hub and caulked after placing the ferrule. Pipes passing through pitched roofs shall be flashed, using lead or copper flashing, with an adjustable integral flange of adequate size to extend not less than 8 inches from the pipe in all directions and lapped into the roofing to provide a watertight seal. The annular space between the flashing and the bare pipe or between the flashing and the metal-jacket-covered insulation shall be sealed as

indicated. Flashing for dry vents shall be turned down into the pipe to form a waterproof joint. Pipes, up to and including 10 inches in diameter, passing through roof or floor waterproofing membrane may be installed through a cast-iron sleeve with caulking recess, anchor lugs, flashing-clamp device, and pressure ring with brass bolts. Flashing shield shall be fitted into the sleeve clamping device. Pipes passing through wall waterproofing membrane shall be sleeved as described above. A waterproofing clamping flange shall be installed.

3.1.5.3 Waterproofing

Waterproofing at floor-mounted water closets shall be accomplished by forming a flashing guard from soft-tempered sheet copper. The center of the sheet shall be perforated and turned down approximately 1-1/2 inches to fit between the outside diameter of the drainpipe and the inside diameter of the cast-iron or steel pipe sleeve. The turned-down portion of the flashing guard shall be embedded in sealant to a depth of approximately 1-1/2 inches; then the sealant shall be finished off flush to floor level between the flashing guard and drainpipe. The flashing guard of sheet copper shall extend not less than 8 inches from the drainpipe and shall be lapped between the floor membrane in a solid coating of bituminous cement. If cast-iron water closet floor flanges are used, the space between the pipe sleeve and drainpipe shall be sealed with sealant and the flashing guard shall be upturned approximately 1-1/2 inches to fit the outside diameter of the drainpipe and the inside diameter of the water closet floor flange. The upturned portion of the sheet fitted into the floor flange shall be sealed.

3.1.5.4 Optional Counterflashing

Instead of turning the flashing down into a dry vent pipe, or caulking and sealing the annular space between the pipe and flashing or metal-jacket-covered insulation and flashing, counterflashing may be accomplished by utilizing the following:

a. A standard roof coupling for threaded pipe up to 6 inches in diameter.

b. A tack-welded or banded-metal rain shield around the pipe.

3.1.5.5 Pipe Penetrations of Slab on Grade Floors

Where pipes, fixture drains, floor drains, cleanouts or similar items penetrate slab on grade floors, except at penetrations of floors with waterproofing membrane as specified in paragraphs Flashing Requirements and Waterproofing, a groove 1/4 to 1/2 inch wide by 1/4 to 3/8 inch deep shall be formed around the pipe, fitting or drain. The groove shall be filled with a sealant as specified in Section 07900 JOINT SEALING.

3.1.6 Fire Seal

Where pipes pass through fire walls, fire-partitions, fire-rated pipe chase walls or floors above grade, a fire seal shall be provided as specified in Section 07840 FIRESTOPPING.

3.1.7 Supports

3.1.7.1 General

Hangers used to support piping 2 inches and larger shall be fabricated to permit adequate adjustment after erection while still supporting the load. Pipe guides and anchors shall be installed to keep pipes in accurate alignment, to direct the expansion movement, and to prevent buckling, swaying, and undue strain. Piping subjected to vertical movement when operating temperatures exceed ambient temperatures shall be supported by variable spring hangers and supports or by constant support hangers. In the support of multiple pipe runs on a common base member, a clip or clamp shall be used where each pipe crosses the base support member. Spacing of the base support members shall not exceed the hanger and support spacing required for an individual pipe in the multiple pipe run. Threaded sections of rods shall not be formed or bent.

3.1.7.2 Pipe Supports and Structural Bracing, Seismic Requirements

Piping and attached valves shall be supported and braced to resist seismic loads. Structural steel required for reinforcement to properly support piping, headers, and equipment, but not shown, shall be provided. Material used for supports shall be as specified in Section 05120 STRUCTURAL STEEL.

3.1.7.3 Pipe Hangers, Inserts, and Supports

Installation of pipe hangers, inserts and supports shall conform to MSS SP-58 and MSS SP-69, except as modified herein.

a. Types 5, 12, and 26 shall not be used.

b. Type 3 shall not be used on insulated pipe.

c. Type 18 inserts shall be secured to concrete forms before concrete is placed. Continuous inserts which allow more adjustment may be used if they otherwise meet the requirements for type 18 inserts.

d. Type 19 and 23 C-clamps shall be torqued per MSS SP-69 and shall have both locknuts and retaining devices furnished by the manufacturer. Field-fabricated C-clamp bodies or retaining devices are not acceptable.

e. Type 20 attachments used on angles and channels shall be furnished with an added malleable-iron heel plate or adapter.

f. Type 24 may be used only on trapeze hanger systems or on fabricated frames.

g. Type 39 saddles shall be used on insulated pipe 4 inches and larger when the temperature of the medium is 60 degrees F or higher. Type 39 saddles shall be welded to the pipe.

h. Type 40 shields shall:

(1) Be used on insulated pipe less than 4 inches.

(2) Be used on insulated pipe 4 inches and larger when the temperature of the medium is 60 degrees F or less.

(3) Have a high density insert for pipe 2 inches and larger and for smaller pipe sizes when the insulation is suspected of being visibly compressed, or distorted at or near the shield/insulation interface. High density inserts shall have a density of 8 pcf or greater.

i. Horizontal pipe supports shall be spaced as specified in MSS SP-69 and a support shall be installed not over 1 foot from the pipe fitting joint at each change in direction of the piping. Pipe supports shall be spaced not over 5 feet apart at valves. Horizontal pipe runs shall include allowances for expansion and contraction.

j. Vertical pipe shall be supported at each floor, except at slab-on-grade, at intervals of not more than 15 feet nor more than 8 feet from end of risers, and at vent terminations. Vertical pipe risers shall include allowances for expansion and contraction.

k. Type 40 shields used on insulated pipe shall have high density inserts with a density of 8 pcf or greater.

l. Type 35 guides using steel, reinforced polytetrafluoroethylene (PTFE) or graphite slides shall be provided to allow longitudinal pipe movement. Slide materials shall be suitable for the system operating temperatures, atmospheric conditions, and bearing loads encountered. Lateral restraints shall be provided as needed. Where steel slides do not require provisions for lateral restraint the following may be used:

(1) On pipe 4 inches and larger when the temperature of the medium is 60 degrees F or higher, a Type 39 saddle, welded to the pipe, may freely rest on a steel plate.

(2) On pipe less than 4 inches a Type 40 shield, attached to the pipe or insulation, may freely rest on a steel plate.

(3) On pipe 4 inches and larger carrying medium less that 60 degrees F a Type 40 shield, attached to the pipe or insulation, may freely rest on a steel plate.

m. Pipe hangers on horizontal insulated pipe shall be the size of the outside diameter of the insulation. The insulation shall be continuous through the hanger on all pipe sizes and applications.

n. Where there are high system temperatures and welding to piping is not desirable, the type 35 guide shall include a pipe cradle, welded to the guide structure and strapped securely to the pipe.

The pipe shall be separated from the slide material by at least 4 inches or by an amount adequate for the insulation, whichever is greater.

3.1.8 Welded Installation

Plumbing pipe weldments shall be in accordance with Section 05093 WELDING, PRESSURE PIPE. Changes in direction of piping shall be made with welding fittings only; mitering or notching pipe to form elbows and tees or other similar type construction will not be permitted. Branch connection may be made with either welding tees or forged branch outlet fittings. Branch outlet fittings shall be forged, flared for improvement of flow where attached to the run, and reinforced against external strains. Beveling, alignment, heat treatment, and inspection of weld shall conform to ASME B31.1. Weld defects shall be removed and repairs made to the weld, or the weld joints shall be entirely removed and rewelded. After filler metal has been removed from its original package, it shall be protected or stored so that its characteristics or welding properties are not affected. Electrodes that have been wetted or that have lost any of their coating shall not be used.

3.1.9 Pipe Cleanouts

Pipe cleanouts shall be the same size as the pipe except that cleanout plugs larger than 4 inches will not be required. A cleanout installed in connection with cast-iron soil pipe shall consist of a long-sweep 1/4 bend or one or two 1/8 bends extended to the place shown. An extra-heavy cast-brass or cast-iron ferrule with countersunk cast-brass head screw plug shall be caulked into the hub of the fitting and shall be flush with the floor. Cleanouts in connection with other pipe, where indicated, shall be T-pattern, 90-degree branch drainage fittings with cast-brass screw plugs, except plastic plugs shall be installed in plastic pipe. Plugs shall be the same size as the pipe up to and including 4 inches. Cleanout tee branches with screw plug shall be installed at the foot of soil and waste stacks, at the foot of interior downspouts, on each connection to building storm drain where interior downspouts are indicated, and on each building drain outside the building. Cleanout tee branches may be omitted on stacks in single story buildings with slab-on-grade construction or where less than 18 inches of crawl space is provided under the floor. Cleanouts on pipe concealed in partitions shall be provided with chromium plated bronze, nickel bronze, nickel brass or stainless steel flush type access cover plates. Round access covers shall be provided and secured to plugs with securing screw. Square access covers may be provided with matching frames, anchoring lugs and cover screws. Cleanouts in finished walls shall have access covers and frames installed flush with the finished wall. Cleanouts installed in finished floors subject to foot traffic shall be provided with a chrome-plated cast brass, nickel brass, or nickel bronze cover secured to the plug or cover frame and set flush with the finished floor. Heads of fastening screws shall not project above the cover surface. Where cleanouts are provided with adjustable heads, the heads shall be cast iron.

3.2 WATER HEATERS AND HOT WATER STORAGE TANKS

3.2.1 Relief Valves

No valves shall be installed between a relief valve and its water heater or storage tank. The P&T relief valve shall be installed where the valve actuator comes in contact with the hottest water in the heater. Whenever possible, the relief valve shall be installed directly in a tapping in the tank or heater; otherwise, the P&T valve shall be installed in the hot-water outlet piping. A vacuum relief valve shall be provided on the cold water supply line to the hot-water storage tank or water heater and mounted above and within 6 inches above the top of the tank or water heater.

3.2.2 Phenolic Resin Application Process

The phenolic resin coating shall be applied at either the coil or coating manufacturer's factory. The coil shall be chemically cleaned to remove any scale if present and to etch the metal surface. The exposed exterior surface of the coil shall be abrasively cleaned to white metal blast in accordance with SSPC SP 5. The exterior surface shall be coated with the three-component coating system in the following sequence and manner. For immediate and final cure times and temperature, the recommendations of the coating manufacturer shall be followed.

a. Wash Primer. One coat of wash primer shall be applied by flooding.

b. Pigmented Base Coat. Pigmented baking phenolic coating shall be applied in several coats by immersion or flooding to a dry film thickness of 4 to 6 mils.

c. Clear Top Coat. Clear non-pigmented baking phenolic top coat shall be applied in several coats by immersion or flooding. The final coat may be applied by spraying. The dry film thickness of the total coating system shall be between 5 and 7 mils.

3.2.3 Heat Traps

Piping to and from each water heater and hot water storage tank shall be routed horizontally and downward a minimum of 2 feet before turning in an upward direction.

3.2.4 Connections to Water Heaters

Connections of metallic pipe to water heaters shall be made with dielectric unions or flanges.

3.3 FIXTURES AND FIXTURE TRIMMINGS

Angle stops, straight stops, stops integral with the faucets, or concealed type of lock-shield, and loose-key pattern stops for supplies with threaded, sweat or solvent weld inlets shall be furnished and installed with fixtures. Where connections between copper tubing and faucets are made by rubber compression fittings, a beading tool shall be used to mechanically deform the tubing above the compression fitting. Exposed traps and supply pipes for fixtures and equipment shall be connected to the rough piping systems at the wall, unless otherwise specified under the

item. Floor and wall escutcheons shall be as specified. Drain lines and hot water lines of fixtures for handicapped personnel shall be insulated and do not require polished chrome finish. Plumbing fixtures and accessories shall be installed within the space shown.

3.3.1 Fixture Connections

Where space limitations prohibit standard fittings in conjunction with the cast-iron floor flange, special short-radius fittings shall be provided. Connections between earthenware fixtures and flanges on soil pipe shall be made gastight and watertight with a closet-setting compound or neoprene gasket and seal. Use of natural rubber gaskets or putty will not be permitted. Fixtures with outlet flanges shall be set the proper distance from floor or wall to make a first-class joint with the closet-setting compound or gasket and fixture used.

3.3.2 Flushometer Valves

Flushometer valves shall be secured to prevent movement by anchoring the long finished top spud connecting tube to wall adjacent to valve with approved metal bracket. Flushometer valves for water closets shall be installed 39 inches above the floor.

3.3.3 Height of Fixture Rims Above Floor

Lavatories shall be mounted with rim 34 inches above finished floor. Wall-hung drinking fountains and water coolers shall be installed with rim 42 inches above floor. Wall-hung service sinks shall be mounted with rim 28 inches above the floor. Installation of fixtures for use by the physically handicapped shall be in accordance with CABO A117.1.

3.3.4 Shower Bath Outfits

The area around the water supply piping to the mixing valves and behind the escutcheon plate shall be made watertight by caulking or gasketing.

3.3.5 Fixture Supports

Fixture supports for off-the-floor lavatories, urinals, water closets, and other fixtures of similar size, design, and use, shall be provided and shall be of the chair-carrier type. The carrier shall provide the necessary means of mounting the fixture, with a foot or feet to anchor the assembly to the floor slab. Adjustability shall be provided to locate the fixture at the desired height and in proper relation to the wall. Support plates, in lieu of chair carrier, shall be fastened to the wall structure only where it is not possible to anchor a floor-mounted chair carrier to the floor slab.

3.3.5.1 Support for Solid Masonry Construction

Chair carrier shall be anchored to the floor slab. Where a floor-anchored chair carrier cannot be used, a suitable wall plate shall be imbedded in the masonry wall.

3.3.5.2 Support for Cellular-Masonry Wall Construction

Chair carrier shall be anchored to floor slab. Where a floor-anchored chair carrier cannot be used, a suitable wall plate shall be fastened to the cellular wall using through bolts and a back-up plate.

3.3.5.3 Support for Steel Stud Frame Partitions

Chair carrier shall be used. The anchor feet and tubular uprights shall be of the heavy duty design; and feet (bases) shall be steel and welded to a square or rectangular steel tube upright. Wall plates, in lieu of floor-anchored chair carriers, shall be used only if adjoining steel partition studs are suitably reinforced to support a wall plate bolted to these studs.

3.3.5.4 Wall-Mounted Water Closet Gaskets

Where wall-mounted water closets are provided, reinforced wax, treated felt, or neoprene gaskets shall be provided. The type of gasket furnished shall be as recommended by the chair-carrier manufacturer.

3.3.6 Backflow Prevention Devices

Plumbing fixtures, equipment, and pipe connections shall not cross connect or interconnect between a potable water supply and any source of nonpotable water. Backflow preventers shall be installed where indicated and in accordance with NAPHCC-01 at all other locations necessary to preclude a cross-connect or interconnect between a potable water supply and any nonpotable substance. In addition backflow preventers shall be installed at all locations where the potable water outlet is below the flood level of the equipment, or where the potable water outlet will be located below the level of the nonpotable substance. Backflow preventers shall be located so that no part of the device will be submerged. Backflow preventers shall be of sufficient size to allow unrestricted flow of water to the equipment, and preclude the backflow of any nonpotable substance into the potable water system. Access shall be provided for maintenance and testing. Each device shall be a standard commercial unit.

3.3.7 Access Panels

Access panels shall be provided for concealed valves and controls, or any item requiring inspection or maintenance. Access panels shall be of sufficient size and located so that the concealed items may be serviced, maintained, or replaced. Access panels shall be as specified in Section 05500 MISCELLANEOUS METAL.

3.3.8 Sight Drains

Sight drains shall be installed so that the indirect waste will terminate 2 inches above the flood rim of the funnel to provide an acceptable air gap.

3.3.9 Traps

Each trap shall be placed as near the fixture as possible, and no fixture

shall be double-trapped. Traps installed on cast-iron soil pipe shall be cast iron. Traps installed on steel pipe or copper tubing shall be recess-drainage pattern, or brass-tube type.

3.3.10 Shower Pans

Before installing shower pan, subfloor shall be free of projections such as nail heads or rough edges of aggregate. Drain shall be a bolt-down, clamping-ring type with weepholes, installed so the lip of the subdrain is flush with subfloor.

3.3.10.1 General

The floor of each individual shower, the shower-area portion of combination shower and drying room, and the entire shower and drying room where the two are not separated by curb or partition, shall be made watertight with a shower pan fabricated in place. The shower pan material shall be cut to size and shape of the area indicated, in one piece to the maximum extent practicable, allowing a minimum of 6 inches for turnup on walls or partitions, and shall be folded over the curb with an approximate return of 1/4 of curb height. The upstands shall be placed behind any wall or partition finish. Subflooring shall be smooth and clean, with nailheads driven flush with surface, and shall be sloped to drain. Shower pans shall be clamped to drains with the drain clamping ring.

3.3.10.2 Metal Shower Pans

When a shower pan of required size cannot be furnished in one piece, metal pieces shall be joined with a flatlock seam and soldered or burned. The corners shall be folded, not cut, and the corner seam shall be soldered or burned. Pans, including upstands, shall be coated on all surfaces with one brush coat of asphalt. Asphalt shall be applied evenly at not less than 1 gallon per 50 square feet. A layer of felt covered with building paper shall be placed between shower pans and concrete floors. The joining surfaces of metal pan and drain shall be given a brush coat of asphalt after the pan is connected to the drain.

3.4 VIBRATION-ABSORBING FEATURES

Mechanical equipment, including compressors and pumps, shall be isolated from the building structure by approved vibration-absorbing features, unless otherwise shown. Each foundation shall include an adequate number of standard isolation units. Each unit shall consist of machine and floor or foundation fastening, together with intermediate isolation material, and shall be a standard product with printed load rating. Piping connected to mechanical equipment shall be provided with flexible connectors. Isolation unit installation shall limit vibration to 20 percent of the lowest equipment rpm.

3.5 IDENTIFICATION SYSTEMS

3.5.1 Identification Tags

Identification tags made of brass, engraved laminated plastic, or engraved

anodized aluminum, indicating service and valve number shall be installed on valves, except those valves installed on supplies at plumbing fixtures. Tags shall be 1-3/8 inch minimum diameter, and marking shall be stamped or engraved. Indentations shall be black, for reading clarity. Tags shall be attached to valves with No. 12 AWG, copper wire, chrome-plated beaded chain, or plastic straps designed for that purpose.

3.5.2 Color Coding

Color coding for piping identification shall be as specified in Section 09900 PAINTING, GENERAL.

3.5.3 Color Coding Scheme for Locating Hidden Utility Components

Scheme shall be provided in buildings having suspended grid ceilings. The color coding scheme shall identify points of access for maintenance and operation of operable components which are not visible from the finished space and installed in the space directly above the suspended grid ceiling. The operable components shall include valves, dampers, switches, linkages and thermostats. The color coding scheme shall consist of a color code board and colored metal disks. Each colored metal disk shall be approximately 3/8 inch in diameter and secured to removable ceiling panels with fasteners. The fasteners shall be inserted into the ceiling panels so that the fasteners will be concealed from view. The fasteners shall be manually removable without tools and shall not separate from the ceiling panels when panels are dropped from ceiling height. Installation of colored metal disks shall follow completion of the finished surface on which the disks are to be fastened. The color code board shall have the approximate dimensions of 3 foot width, 30 inches height, and 1/2 inch thickness. The board shall be made of wood fiberboard and framed under glass or 1/16 inch transparent plastic cover. Unless otherwise directed, the color code symbols shall be approximately 3/4 inch in diameter and the related lettering in 1/2 inch high capital letters. The color code board shall be mounted and located in the mechanical or equipment room. The color code system shall be USMA - Weat Point Standrads.

3.6 ESCUTCHEONS

Escutcheons shall be provided at finished surfaces where bare or insulated piping, exposed to view, passes through floors, walls, or ceilings, except in boiler, utility, or equipment rooms. Escutcheons shall be fastened securely to pipe or pipe covering and shall be satin-finish, corrosion-resisting steel, polished chromium-plated zinc alloy, or polished chromium-plated copper alloy. Escutcheons shall be either one-piece or split-pattern, held in place by internal spring tension or setscrew.

3.7 PAINTING

Painting of pipes, hangers, supports, and other iron work, either in concealed spaces or exposed spaces, is specified in Section 09900 PAINTING, GENERAL.

3.8 TESTS, FLUSHING AND DISINFECTION

3.8.1 Plumbing System

The following tests shall be performed on the plumbing system in accordance with NAPHCC-01.

a. Drainage and Vent Systems Tests.

b. Building Sewers Tests.

c. Water Supply Systems Tests.

3.8.1.1 Test of Backflow Prevention Assemblies

Backflow prevention assembly shall be tested using gauges specifically designed for the testing of backflow prevention assemblies. Gauges shall be tested annually for accuracy in accordance with the University of Southern California's Foundation of Cross Connection Control and Hydraulic Research or the American Water Works Association Manual of Cross Connection (Manual M-14). Report form for each assembly shall include, as a minimum, the following, prior to Owner's acceptance:

Data on Device	Data on Testing Firm
Type of Assembly	Name
Manufacturer	Address
Model Number	Certified Tester
Serial Number	Certified Tester No.
Size	Date of Test
Location	
Test Pressure Readings	Serial Number and Test Data of Gauges

If the unit fails to meet specified requirements, the unit shall be repaired and retested.

3.8.1.2 Shower Pans

After installation of the pan and finished floor, the drain shall be temporarily plugged below the weep holes. The floor area shall be flooded with water to a minimum depth of 1 inch for a period of 24 hours. Any drop in the water level during test, except for evaporation, will be reason for rejection, repair, and retest.

3.8.2 Defective Work

If inspection or test shows defects, such defective work or material shall be replaced or repaired as necessary and inspection and tests shall be repeated. Repairs to piping shall be made with new materials. Caulking of screwed joints or holes will not be acceptable.

3.8.3 System Flushing

Before tests, potable water piping shall be flushed. In general, sufficient water shall be used to produce a minimum water velocity of 2.5 feet per second through piping being flushed. Flushing shall be continued

until entrained dirt and other foreign materials have been removed and until discharge water shows no discoloration. System shall be drained at low points. Strainer screens shall be removed, cleaned, and replaced in line. After flushing and cleaning, systems shall be prepared for service by immediately filling water piping with clean, fresh potable water. Any stoppage, discoloration, or other damage to the finish, furnishings, or parts of the building due to the Contractor's failure to properly clean the piping system shall be repaired by the Contractor. When the system flushing is complete, the hot-water system shall be adjusted for uniform circulation. Flushing devices and automatic control systems shall be adjusted for proper operation.

3.8.4 Operational Test

Upon completion of and prior to acceptance of the installation, the Contractor shall subject the plumbing system to operating tests to demonstrate satisfactory functional and operational efficiency. Such operating tests shall cover a period of not less than 8 hours for each system and shall include the following information in a report with conclusion as to the adequacy of the system:

a. Time, date, and duration of test.

b. Water pressures at the most remote and the highest fixtures.

c. Operation of each fixture and fixture trim.

d. Operation of each valve, hydrant, and faucet.

e. Pump suction and discharge pressures.

f. Temperature of each domestic hot-water supply.

g. Operation of each floor and roof drain by flooding with water.

h. Operation of each vacuum breaker and backflow preventer.

i. Complete operation of each water pressure booster system, including pump start pressure and stop pressure.

3.8.5 Disinfection

After operational tests are complete, the entire domestic hot- and cold-water distribution system shall be disinfected. System shall be flushed as specified, before introducing chlorinating material. The chlorinating material shall be hypochlorites or liquid chlorine. Water chlorination procedure shall be in accordance with AWWA M20. The chlorinating material shall be fed into the water piping system at a constant rate at a concentration of at least 50 parts per million (ppm). A properly adjusted hypochlorite solution injected into the main with a hypochlorinator, or liquid chlorine injected into the main through a solution-feed chlorinator and booster pump, shall be used. The chlorine residual shall be checked at intervals to ensure that the proper level is maintained. Chlorine application shall continue until the entire main is

filled. The water shall remain in the system for a minimum of 24 hours. Each valve in the system being disinfected shall be opened and closed several times during the contact period to ensure its proper disinfection. Following the 24-hour period, no less than 25 ppm chlorine residual shall remain in the system. Water tanks shall be disinfected by the addition of chlorine directly to the filling water. Following a 6 hour period, no less than 50 ppm chlorine residual shall remain in the tank. The system including the tanks shall then be flushed with clean water until the residual chlorine is reduced to less than one part per million. During the flushing period each valve and faucet shall be opened and closed several times. From several points in the system the Contracting Officer will take samples of water in proper disinfection containers for bacterial examination. The samples of water shall be tested for total coliform organisms (coliform bacteria, fecal coliform, streptococcal, and other bacteria) in accordance with AWWA-01. The testing method used shall be either the multiple-tube fermentation technique or the membrane-filter technique. The sterilizing shall be repeated until tests indicate the absence of coliform organisms (zero mean coliform density per 100 milliliters) in the samples for at least 2 full days. The system will not be accepted until satisfactory bacteriological results have been obtained.

3.9 PLUMBING FIXTURE SCHEDULE

P-1 WATER CLOSET:

Siphon-jet, elongated bowl, top supply spud, ASME A112.19.2M, floor mounted or wall mounted as indicated on Drawings; as manufactured by Kohler, Eljer or American Standard. Floor flange shall be copper alloy, cast iron, or plastic.

Gasket shall be wax type.

Seat - ANSI Z124.5, Type A, white solid plastic, elongated, open front.

Flushometer Valve - ASSE ANSI/ASSE 1037, large diaphragm type with non-hold-open feature, backcheck angle control stop, and vacuum breaker. Minimum upper chamber inside diameter of not less than 2-5/8 inches at the point where the diaphragm is sealed between the upper and lower chambers, as manufactured by Sloan, Zurn or Toto. The maximum water use shall be 1.6 gallons per flush.

P-2 WATER CLOSET HANDICAPPED:

Height of top rim of bowl shall be in accordance with CABO A117.1; other features are the same as P-1.

P-2A WATER CLOSET HANDICAPPED:

Height of top rim of bowl shall be in accordance with CABO A117.1; other features are the same as P-1.

P-3 URINAL:

Wall hanging, with integral trap and extended shields, ASME A112.19.2M

siphon jet, as manufactured by Kohler, Eljer, or American Standard. Top supply connection, back outlet.

Flushometer Valve - Similar to Flushometer Valve for P-1. The maximum water use shall be 1 gallon per flush.

Wall hanging urinal shall be in accordance with ANSI Z124.9 and be a waterless, non-flushing type, with replaceable trap insert having circular outer rim opening for flow. The replaceable trap insert shall contain a low specific gravity immiscible barrier liquid. The liquid shall be biodegradable. The urinal shall not require chair carrier. The urinal and trap assembly shall maintain a sufficient barrier of immiscible liquid necessary to inhibit backflow of sewer gases.

P-3A URINAL - HANDICAPPED

Height shall be set for handicapped use. Features same as P-3.

P-4 BATHTUB "Not Used":

P-5 LAVATORY:

Manufacturer's standard sink depth as manufactured by Kohler, Eljer or American Standard, vitreous china ASME A112.19.2M, straight back.

Faucet - Faucets shall be single control, mixing type. Faucets shall have metal replaceable cartridge control unit or metal cartridge units with diaphragm which can be replaced without special tools. Valves and handles shall be copper alloy. Connection between valve and spout for center-set faucet shall be of rigid metal tubing. Flow shall be limited to 0.25 gallon per cycle if a metering device or fitting is used that limits the period of water discharge.

Handles - Index Turn Crown type. Cast, formed, or drop forged copper alloy.

Drain - Strainer shall be copper alloy. Pop-up drain for locker rooms; Grid strainer for Public.

P-6 LAVATORY, HANDICAPPED

Same features as P-5 except with off-set P-trap.

P-7 KITCHEN SINK:

Self rimming with holes for faucet and spout single bowl 25 x 22 inches x 6 inches deep, stainless steel ASME A112.19.3M, as manufactured by Elkay, Just, or Moen.

Faucet and Spout - Cast or wrought copper alloy, as manufactured by Elkay, Chicago, or Kohler. Aerator shall have internal threads. Goose neck faucet; flow shall be limited to 2.5 gpm at a flowing water pressure of 80 psi.

Handle - Cast copper alloy, wrought copper alloy, or stainless steel, lever

type.

Drain Assembly - Plug, cup strainer, crossbars, jam nuts, washers, couplings, stopper, etc., shall be copper alloy or stainless steel.

P-7A KITCHEN SINK:

Self rimming with holes for faucet and spout single bowl 25 x 22 inches x 6 inches deep, stainless steel ASME A112.19.3M, as manufactured by Elkay, Just, or Moen.

Faucet and Spout - Cast or wrought copper alloy, as manufactured by Elkay, Chicago, or Kohler. Aerator shall have internal threads. Goose neck faucet; flow shall be limited to 2.5 gpm at a flowing water pressure of 80 psi.

Handle - Cast copper alloy, wrought copper alloy, or stainless steel, lever type.

Drain Assembly - Plug, cup strainer, crossbars, jam nuts, washers, couplings, stopper, etc., shall be copper alloy or stainless steel.

P-8 SERVICE SINK:

Enameled cast iron ASME A112.19.1M, as manufactured by Kohler, Eljer or Crane, trap standard 22 inches wide x 13 inches deep, splashback 9 inches high.

Faucet and Spout - Cast or wrought copper alloy, as manufactured by Kohler, Eljer or Chicago, with top or bottom brace, with backflow preventer. Faucets shall have replaceable seat and the washer shall rotate onto the seat with stops in shank. Handles shall be lever type. Strainers shall have internal threads.

Drain Assembly - Plug, cup strainer, crossbars, jam nuts, washers, couplings, stopper, etc., shall be copper alloy.

Trap - Cast iron, minimum 3 inch diameter.

P-8A MOP SINK:

24 inch x 24 inch x 12 inch deep floor mounted moulded stone sink with stainless steel wall guard, as manufactured by Fiat, Stern Williams, or Florestone.

Faucet and Spout shall be the same as P-8.

Drain assembly shall be same as P-8.

Trap shall be same as P-8.

P-9 "NOT USED"

P-10 WORK SINK:

Self rimming with holes for faucet and spout. Single bowl 25 inch x 22 inch x 12 inches deep, stainless steel, ASME A112.19.3M, as manufactured by Elkay, Kohler, or Just.

Faucet and Spout - Cast or wrought copper alloy as manufactured by Elkay, Chicago, or Kohler, with top or bottom brace, with backflow preventer. Faucets shall have replaceable seat and the washer shall rotate on the seat. Strainers shall have internal threads.

Handles - Cast copper alloy, wrought copper alloy, or stainless steel, lever type.

P-10A WORK SINK:

Self rimming with holes for faucet and spout. Single bowl 25 inch x 22 inch x 12 inches deep, stainless steel, ASME A112.19.3M, as manufactured by Elkay, Kohler, or Just.

Faucet and Spout - Cast or wrought copper alloy as manufactured by Elkay, Chicago, or Kohler, with top or bottom brace, with backflow preventer. Faucets shall have replaceable seat and the washer shall rotate on the seat. Strainers shall have internal threads.

Handles - Cast copper alloy, wrought copper alloy, or stainless steel, lever type.

P-11 "NOT USED"

P-12 LAUNDRY SINK:

Double bowl, as manufactured by Fiat, Florestone or Stern Williams, pedestal type, 46 inches x 22 inches, leg support, enameled cast iron ASME A112.19.1M, stainless steel ASME A112.19.3M, or fiberglass.

Faucet and Spout - Cast or wrought copper alloy, cast iron, or stainless steel as manufactured by Elkay, Chicago, or Kohler, with vacuum breaker. Faucets shall have replaceable seat and the stem shall rotate onto the seat. Strainers shall have internal threads. Combination faucets shall be mounted on the tub back. Spouts shall be externally threaded for hose connection.

Handles - Cast copper alloy, wrought copper alloy, or stainless steel, lever type.

Traps - Copper alloy, or cast iron.

P-13, P-13A, P13B, P13C, P13D SHOWER: As manufactured by Symmons, Acorn or Bradley; Shower heads, CID A-A-240 other than emergency showers, shall include a non-removable, tamperproof device to limit water flow to 2.5 gpm when tested in accordance with ASME A112.18.1M.

Recessed Wall Mounted: Shower head shall be adjustable spray, stainless steel or chromium plated brass with ball joint. Handles shall be

chrome-plated die cast zinc alloy. Control valves shall be copper alloy and have metal integral parts of copper alloy, nickel alloy, or stainless steel. Valves shall be pressure reducing, single lever type. Shower head shall be vandalproof with integral back. Provide stainless steel cover on all exposed stainless steel piping.

Exposed Wall Mounted: Shower head shall be adjustable spray, stainless steel or chromium plated brass with ball joint. Handles shall be chrome-plated die cast zinc alloy. Control valves shall be copper alloy and have metal integral parts of copper alloy, nickel alloy, or stainless steel. Valves shall be pressure reducing, single lever type. Shower head shall be vandalproof with integral back.

Emergency Showers: Head for Emergency and Emergency Eye and Face Wash. Shower control shall be 1 inch or 1-1/2 inch stay-open type control valve. Unit shall be corrosion-resisting steel and shall be mounted as indicated, as manufactured by Bradley, Guardian, or Speakman.

P-14, P-14A, DRINKING FOUNTAINS AND CUSPIDORS:

Bubbler drinking fountains shall have self-closing valves. Self-closing valves shall have automatic stream regulators, flow control capability, a push button actuation or a cross-shaped index metal turn handle without a hood. Spouts shall provide a flow of water at least 4 inches high so as to allow the insertion of a cup or glass under the flow of water. Stops, stream regulators, flow controls, pushbuttons, handles, and traps shall be made of copper zinc alloy. Strainers and drains shall be made of copper zinc alloy or stainless steel, as manufactured by Halsey Taylor, Haws, or Elkay.

Semi-Recessed Wall-Mounted - Semi-recessed wall-mounted units shall be 14 inches wide, 11 inches deep, 26-5/8 inches high, and have a back height of 13 to 22 inches. The bowl shall be made of corrosion-resisting steel. The unit shall be for interior installation.

Recessed Wall-Mounted - Recessed wall-mounted units shall be 16-3/4 inches wide, 11 inches deep, 30 inches high, and have a back height of 13 to 22 inches. The bowl shall be made of corrosion-resisting steel. The unit shall be for interior installation.

Handicapped - Handicapped units shall be surface wall-mounted. The dimensions shall be 15 inches wide, 20 inches deep, with a back height of 6 to 8 inches. The unit shall clear the floor or ground by at least 8 inches. A clear knee space shall exist between the bottom of the bowl and the floor or ground of at least 27 inches and between the front edge of the bowl and the body of the unit of at least 8 inches. A 8 inch wide clear space shall exist on both sides of the unit. The spout height shall be no more than 36 inches above the floor or ground to the outlet. The spout shall be at the front of the unit and direct the water flow in a trajectory that is parallel or nearly parallel to the front of the unit. The bowl shall be 6-1/2 inches high and made of corrosion-resisting steel. The unit shall be for interior installation.

Interior Free Standing - Free standing units shall be 40 to 41-1/2 inches

high, 12 to 18 inches wide, and 12 to 14 inches deep. The bowl shall be made of corrosion-resisting steel. The unit shall be for interior installation.

P-14B, P-15 WATER COOLER DRINKING FOUNTAINS:

Water cooler drinking fountains shall: be self contained, conform to ARI 1010, use one of the fluorocarbon gases conforming to ARI 700 and ASHRAE 34 which has an Ozone Depletion Potential of less than or equal to 0.05, have a capacity to deliver 8 gph of water at 50 degrees F with an inlet water temperature of 80 degrees F while residing in a room environment of 90 degrees F, and have self-closing valves. Self-closing valves shall have automatic stream regulators, have a flow control capability, have a push button actuation or have a cross-shaped index metal turn handle without a hood. Exposed surfaces of stainless steel shall have No. 4 general polish finish. Spouts shall provide a flow of water at least 4 inches high so as to allow the insertion of a cup or glass under the flow of water, as manufactured by Halsey Taylor, Haws, or Elkay.

Surface Wall-Mounted - Surface wall-mounted units shall be 13-1/4 inches wide, 13 inches deep, and have a back height of 6 to 8 inches. The bowl shall be made of corrosion resisting steel. The unit shall have concealed fasteners and be for interior installation.

Handicapped - Handicapped units shall be surface wall-mounted. The dimensions shall be 15 inches wide, 20 inches deep, with a back height of 6 to 8 inches. The unit shall clear the floor or ground by at least 8 inches. A clear knee space shall exist between the bottom of the bowl and the floor or ground of at least 27 inches and between the front edge of the bowl and the body of the unit of at least 8 inches. A 8 inch wide clear space shall exist on both sides of the unit. The spout height shall be no more than 36 inches above the floor or ground to the outlet. The spout shall be at the front of the unit and direct the water flow in a trajectory that is parallel or nearly parallel to the front of the unit. The bowl shall be 6-1/2 inches high, made of corrosion resisting steel and be for interior installation.

Interior Free Standing - Free standing units shall be 40 to 41-1/2 inches high, 12 to 18 inches wide, and 12 to 14 inches deep. The bowl shall be made of corrosion resisting steel and be for interior installation.

P-16 HOT AND COLD WATER HYDRANT

Cast nickel bronze box with satin finish face. Extra deep box, vacuum breaker, with brass casing. Wall mounted, as manufactured by JR Smith, Josam, or Zurn.

3.10 POSTED INSTRUCTIONS

Framed instructions under glass or in laminated plastic, including wiring and control diagrams showing the complete layout of the entire system, shall be posted where directed. Condensed operating instructions explaining preventive maintenance procedures, methods of checking the system for normal safe operation, and procedures for safely starting and

stopping the system shall be prepared in typed form, framed as specified above for the wiring and control diagrams and posted beside the diagrams. The framed instructions shall be posted before acceptance testing of the systems.

3.11 PERFORMANCE OF WATER HEATING EQUIPMENT

Standard rating condition terms are as follows:

EF = Energy factor, overall efficiency.

ET = Thermal efficiency with 70 degrees F delta T.

EC = Combustion efficiency, 100 percent - flue loss when smoke = o (trace is permitted).

SL = Standby loss in W/sq. ft. based on 80 degrees F delta T, or in percent per hour based on nominal 90 degrees F delta T.

HL = Heat loss of tank surface area.

V = Storage volume in liters

3.11.1 Storage Water Heaters

See schedule on Drawings.

3.11.1.1 Electric

As manufactured by Ruud, A.O. Smith, or State.

a. Storage capacity of 120 gallons or less, and input rating of 12 kW or less: minimum energy factor (EF) shall be 0.95-0.00132V per 10 CFR 430.

b. Storage capacity of more than 120 gallons or input rating more than 12 kW: maximum SL shall be 1.9 W/sq. ft. per ASHRAE 90.1, Addenda B.

3.11.2 Unfired Hot Water Storage

Volumes and inputs: maximum HL shall be 6.5 Btu/h/sq. ft.

3.11.3 Instantaneous Water Heater - Point of Use Type

As manufactured by EEemax, Hubbell or PVI.

3.12 TABLES

TABLE I
PIPE AND FITTING MATERIALS FOR
DRAINAGE, WASTE, AND VENT PIPING SYSTEMS

Item #	Pipe and Fitting Materials	SERVICE A	B	C	D	E	F
1	Cast iron soil pipe and fittings, hub and spigot, ASTM A 74 with compression gaskets	X	X	X	X	X	
2	Cast iron soil pipe and fittings hubless, CISPI 301 and ASTM A 888		X	X	X		
3	Cast iron drainage fittings, threaded, ASME B16.12 for use with Item 10	X		X	X		
4	Cast iron screwed fittings (threaded) ASME B16.4 for use with Item 10				X	X	
5	Grooved pipe couplings, ferrous and non-ferrous pipe ASTM A 536 and ASTM A 47, ASTM A 47M	X	X		X	X	
6	Ductile iron grooved joint fittings for ferrous pipe ASTM A 536 and ASTM A 47, ASTM A 47M for use with Item 5	X	X		X	X	
7	Bronze sand casting grooved joint pressure fittings for non-ferrous pipe ASTM B 584, for use with Item 5	X	X		X	X	
8	Wrought copper grooved joint pressure pressure fittings for non-ferrous pipe ASTM B 75 C12200, ASTM B 152, ASTM B 152M, C11000, ASME B16.22 ASME B16.22 for use with Item 5	X	X				
9	Malleable-iron threaded fittings, galvanized ASME B16.3 for use with Item 10				X	X	
10	Steel pipe, seamless galvanized, ASTM A 53, Type S, Grade B	X			X	X	
11	Seamless red brass pipe, ASTM B 43		X	X			

TABLE I
PIPE AND FITTING MATERIALS FOR
DRAINAGE, WASTE, AND VENT PIPING SYSTEMS

Item #	Pipe and Fitting Materials	SERVICE A	B	C	D	E	F
12	Bronzed flanged fittings, ASME B16.24 for use with Items 11 and 14				X	X	
13	Cast copper alloy solder joint pressure fittings, ASME B16.18 for use with Item 14				X	X	
14	Seamless copper pipe, ASTM B 42			X			
15	Cast bronze threaded fittings, ASME B16.15				X	X	
16	Copper drainage tube, (DWV), ASTM B 306	X*	X	X*	X	X	
17	Wrought copper and wrought alloy solder-joint drainage fittings. ASME B16.29	X	X	X	X	X	
18	Cast copper alloy solder joint drainage fittings, DWV, ASME B16.23	X	X	X	X	X	
19	High-silicon content cast iron pipe and fittings (hub and spigot, and mechanical joint), ASTM A 518, ASTM A 518M		X			X	
20	Filament-wound reinforced thermosetting resin (RTRP) pipe, ASTM D 2996						X

SERVICE:

A - Underground Building Soil, Waste and Storm Drain
B - Aboveground Soil, Waste, Drain In Buildings
C - Underground Vent
D - Aboveground Vent
E - Interior Rainwater Conductors Aboveground
F - Corrosive Waste And Vent Above And Belowground
G - SE-1, SE-2 Pump Discharge, Grooved Pipe Galvanized Steel with Galvanized Steel Couplings
H - Pool Water Discharge, Grooved Pipe Galvanized Steel with Galvanized Steel Couplings
* - Hard Temper

TABLE I
PIPE AND FITTING MATERIALS FOR
DRAINAGE, WASTE, AND VENT PIPING SYSTEMS

		SERVICE					
Item #	Pipe and Fitting Materials	A	B	C	D	E	F

TABLE II
PIPE AND FITTING MATERIALS FOR PRESSURE PIPING SYSTEMS

Item No.	Pipe and Fitting Materials	SERVICE A	B	C	D
1	Malleable-iron threaded fittings, a. Galvanized, ASME B16.3 for use with Item 4a	X	X	X	X
	b. Same as "a" but not galvanized for use with Item 4b			X	
2	Grooved pipe couplings, ferrous pipe ASTM A 536 and ASTM A 47, ASTM A 47M, non-ferrous pipe, ASTM A 536 and ASTM A 47, ASTM A 47M	X	X	X	
3	Ductile iron grooved joint fittings for ferrous pipe ASTM A 536 and ASTM A 47, ASTM A 47M for use with Item 2	X	X	X	
4	Steel pipe: a. Seamless, galvanized, ASTM A 53, Type S, Grade B	X	X	X	X
	b. Seamless, black, ASTM A 53, Type S, Grade B			X	
5	Seamless red brass pipe, ASTM B 43	X	X		X
6	Bronze flanged fittings, ASME B16.24 for use with Items 5 and 7	X	X		X
7	Seamless copper pipe, ASTM B 42	X	X		X
8	Seamless copper water tube, ASTM B 88, ASTM B 88M	X**	X**	X**	X***
9	Seamless and welded copper distribution tube (Type D) ASTM B 641	X**	X**	X**	X****
10	Cast bronze threaded fittings, ASME B16.15 for use with Items 5 and 7	X	X		X

TABLE II
PIPE AND FITTING MATERIALS FOR PRESSURE PIPING SYSTEMS

Item No.	Pipe and Fitting Materials	SERVICE A	B	C	D
11	Wrought copper and bronze solder-joint pressure fittings, ASME B16.22 for use with Items 5 and 7	X	X	X	X
12	Cast copper alloy solder-joint pressure fittings, ASME B16.18 for use with Items 8 and 9	X	X	X	X
13	Bronze and sand castings grooved joint pressure fittings for non-ferrous pipe ASTM B 584, for use with Item 2	X	X	X	
14	Steel pipeline flanges, MSS SP-44	X	X		
15	Fittings: brass or bronze; ASME B16.15, and ASME B16.18 ASTM B 828	X	X		
16	Carbon steel pipe unions, socket-welding and threaded, MSS SP-83	X	X	X	
17	Malleable-iron threaded pipe unions ASME B16.39	X	X		
18	Nipples, pipe threaded ASTM A 733	X	X	X	

A - Cold Water Aboveground
B - Hot Water 180 degrees F Maximum Aboveground
C - Compressed Air Lubricated
D - Cold Water Service Belowground
Indicated types are minimum wall thicknesses.
** - Type L - Hard
*** - Type K - Hard temper with brazed joints only or type K-soft temper without joints in or under floors
**** - In or under slab floors only brazed joints

TABLE III
STANDARD RATING CONDITIONS AND MINIMUM PERFORMANCE RATINGS FOR WATER HEATING EQUIPMENT

A. STORAGE WATER HEATERS

FUEL	STORAGE CAPACITY GALLONS		INPUT RATING	TEST PROCEDURE	REQUIRED PERFORMANCE
Elect.	120 max.		12 kW max.	10 CFR 430	EF = 0.95-0.00132V minimum
Elect.	120 min.	OR	12 kW min.	ASHRAE 90.1 (Addenda B)	SL = 1.9 W/sq. ft. maximum
Gas	100 max.		75,000 Btu/h max.	10 CFR 430	EF = 0.62-0.0019V minimum
Gas	100 min.	OR	75,000 Btu/h	ANSI Z21.10.3	ET = 77 percent; SL = 1.3+38/V max.

B. Unfired Hot Water Storage, instantaneous water heater, and pool heater.

Volumes and inputs: maximum HL shall be 6.5 Btu/h/sq. ft.

C. Instantaneous Water Heater

Gas	All	All	ANSI Z21.10.3	ET = 80 percent

D. Pool Heater

Gas	All	ANSI Z21.56	ET = 78 percent

TERMS:

EF = Energy factor, overall efficiency.
ET = Thermal efficiency with 70 degrees F delta T.
EC = Combustion efficiency, 100 percent - flue loss when smoke = 0 (trace is permitted).
SL = Standby loss in W/sq. ft. based on 80 degrees F delta T, or in percent per hour based on nominal 90 degrees F delta T.
HL = Heat loss of tank surface area
V = Storage volume in gallons

-- End of Section --

SECTION 15556

FORCED HOT WATER HEATING SYSTEMS USING WATER AND STEAM HEAT EXCHANGERS, GLYCOL HEAT RECOVERY SYSTEM AND WORK ASSOCIATED WITH DIESEL GENERATOR INSTALLATION

PART 1 GENERAL

1.1 REFERENCES

The publications listed below form a part of this specification to the extent referenced. The publications are referred to in the text by basic designations only.

AMERICAN SOCIETY FOR TESTING AND MATERIALS (ASTM)

ASTM A 47	(1990; R 1995) Ferritic Malleable Iron Castings
ASTM A 47M	(1990; R 1996) Ferritic Malleable Iron Castings (Metric)
ASTM A 53	(1997) Pipe, Steel, Black and Hot-Dipped, Zinc-Coated Welded and Seamless
ASTM A 105/A 105M	(1996) Carbon Steel Forgings for Piping Applications
ASTM A 106	(1997) Seamless Carbon Steel Pipe for High-Temperature Service
ASTM A 183	(1983; R 1990) Carbon Steel Track Bolts and Nuts
ASTM A 193/A 193M	(1997a) Alloy-Steel and Stainless Steel Bolting Materials for High-Temperature Service
ASTM A 234/A 234M	(1997) Piping Fittings of Wrought Carbon Steel and Alloy Steel for Moderate and High Temperature Service
ASTM A 366/A 366M	(1996) Steel, Sheet, Carbon, Cold-Rolled, Commercial Quality
ASTM A 515/A 515M	(1992) Pressure Vessel Plates, Carbon Steel, for Intermediate- and Higher-Temperature Service
ASTM A 516/A 516M	(1990; R 1996) Pressure Vessel Plates, Carbon Steel, for Moderate- and

	Lower-Temperature Service
ASTM A 536	(1984; R 1993) Ductile Iron Castings
ASTM A 569/A 569M	(1997) Commercial Steel (CS) Sheet and Strip, Carbon (0.15 Maximum Percent), Hot-Rolled
ASTM A 653/A 653M	(1996) Steel Sheet, Zinc-Coated (Galvanized) or Zinc-Iron Alloy-Coated (Galvannealed) by the Hot-Dip Process
ASTM A 733	(1993) Welded and Seamless Carbon Steel and Austenitic Stainless Steel Pipe Nipples
ASTM B 32	(1996) Solder Metal
ASTM B 62	(1993) Composition Bronze or Ounce Metal Castings
ASTM B 75	(1995a) Seamless Copper Tube
ASTM B 88	(1996) Seamless Copper Water Tube
ASTM B 251	(1993) Wrought Seamless Copper and Copper-Alloy Tube
ASTM B 395	(1995) U-Bend Seamless Copper and Copper Alloy Heat Exchanger and Condenser Tubes
ASTM B 395M	(1995) U-Bend Seamless Copper and Copper Alloy Heat Exchanger and Condenser Tubes (Metric)
ASTM B 650	(1995) Electrodeposited Engineering Chromium Coatings of Ferrous Substrates
ASTM B 687	(1996) Brass, Copper, and Chromium-Plated Pipe Nipples
ASTM B 813	(1993) Liquid and Paste Fluxes for Soldering Applications of Copper and Copper Alloy Tube
ASTM B 828	(1992) Making Capillary Joints by Soldering of Copper and Copper Alloy Tube and Fittings
ASTM D 596	(1991; R 1995) Reporting Results of Analysis of Water
ASTM D 1248	(1984, R 1989) Polyethylene Plastics Molding and Extrusion Materials

ASTM D 2000	(1996) Rubber Products in Automotive Applications
ASTM D 3308	(1991a) PTFE Resin Skived Tape

AMERICAN SOCIETY OF MECHANICAL ENGINEERS (ASME)

ASME B1.20.1	(1983; R 1992) Pipe Threads, General Purpose (Inch)
ASME B16.1	(1989) Cast Iron Pipe Flanges and Flanged Fittings
ASME B16.3	(1992) Malleable Iron Threaded Fittings
ASME B16.4	(1992) Gray Iron Threaded Fittings
ASME B16.5	(1996) Pipe Flanges and Flanged Fittings NPS 1/2 thru NPS 24
ASME B16.9	(1993) Factory-Made Wrought Steel Buttwelding Fittings
ASME B16.11	(1996) Forged Fittings, Socket-Welding and Threaded
ASME B16.15	(1985; R 1994) Cast Bronze Threaded Fittings Classes 125 and 250
ASME B16.18	(1984; R 1994) Cast Copper Alloy Solder Joint Pressure Fittings
ASME B16.21	(1992) Nonmetallic Flat Gaskets for Pipe Flanges
ASME B16.22	(1995) Wrought Copper and Copper Alloy Solder Joint Pressure Fittings
ASME B16.26	(1988) Cast Copper Alloy Fittings for Flared Copper Tubes
ASME B16.39	(1986; R 1994) Malleable Iron Threaded Pipe Unions Classes 150, 250, and 300
ASME B31.1	(1995; B31.1a; B31.1b; B31.1c) Power Piping
ASME B40.1	(1991) Gauges - Pressure Indicating Dial Type - Elastic Element
ASME BPV VIII Div 1	(1998) Boiler and Pressure Vessel Code; Section VIII, Pressure Vessels Division 1 - Basic Coverage

AMERICAN WATER WORKS ASSOCIATION (AWWA)

AWWA C606	(1987) Grooved and Shouldered Joints

AMERICAN WELDING SOCIETY (AWS)

AWS A5.8	(1992) Filler Metals for Brazing and Braze Welding

EXPANSION JOINT MANUFACTURERS ASSOCIATION (EJMA)

EJMA-01	(1993) EJMA Standards

HYDRONICS INSTITUTE (HYI)

HYI-01	(1998) I=B=R Ratings for Boilers, Baseboard Radiation and Finned Tube (Commercial) Radiation

MANUFACTURERS STANDARDIZATION SOCIETY OF THE VALVE AND FITTINGS INDUSTRY (MSS)

MSS SP-25	(1998) Standard Marking System for Valves, Fittings, Flanges and Unions
MSS SP-58	(1993) Pipe Hangers and Supports - Materials, Design and Manufacture
MSS SP-69	(1996) Pipe Hangers and Supports - Selection and Application
MSS SP-70	(1990) Cast Iron Gate Valves, Flanged and Threaded Ends
MSS SP-71	(1997) Cast Iron Swing Check Valves, Flanges and Threaded Ends
MSS SP-80	(1997) Bronze Gate, Globe, Angle and Check Valves
MSS SP-85	(1994) Cast Iron Globe & Angle Valves, Flanged and Threaded Ends

NATIONAL ASSOCIATION OF PLUMBING-HEATING-COOLING CONTRACTORS (NAPHCC)

NAPHCC-01	(1996) National Standard Plumbing Code

NATIONAL ELECTRICAL MANUFACTURERS ASSOCIATION (NEMA)

NEMA 250	(1991) Enclosures for Electrical Equipment (1000 Volts Maximum)

1.2 SUBMITTALS

Government approval is required for submittals with a "GA" designation; submittals having an "FIO" designation are for information only. The following shall be submitted in accordance with Section 01330 SUBMITTAL PROCEDURES:

SD-01 Data

Spare Parts; GA.

Spare parts data for each different item of material and equipment specified , after approval of the related submittals and not later than 2 months prior to the date of beneficial occupancy. The data shall include a complete list of parts and supplies, with current unit prices and source of supply.

Welding Procedures and Qualifications; GA.

5 copies of qualified procedures and list of names and identification symbols of qualified welders and welding operators, prior to welding operations.

SD-04 Drawings

Heating System; GA.

Detail drawings consisting of a complete list of equipment and material, including manufacturer's descriptive and technical literature, performance charts and curves, catalog cuts, and installation instructions. Drawings shall also contain complete wiring and schematic diagrams and any other details required to demonstrate that the system has been coordinated and will properly function as a unit. Drawings shall show proposed layout and anchorage of equipment and appurtenances and equipment relationship to other parts of the work including clearances for maintenance and operation.

Heating System Coordination Drawings; GA.

The Contractor shall prepare Coordination Drawings showing all of the work (equipment, piping, ductwork, conduit, etc.) to be installed as part of the work of this section of the specifications. The Coordination Drawings shall be on reproducible transparencies at not less than 3/8 inch = 1 ft.-0 inch scale.

This contractor shall show all of the work associated with this section of the specifications in the sequence prescribed below. The sequence of coordination drawings shall be HVAC-PLBG-FP-ELEC-GC unless otherwise determined by the contracting officer or the general contractor.

This contractor shall attend a series of meetings arranged by the General Contractor to resolve any real or apparent interferences or conflicts with the work of the other Contractors or with ceiling heights shown on the drawings.

This contractor shall then make adjustments to his work on the Coordination Drawings to resolve any real or apparent interferences or conflicts.

After any real or apparent interferences and conflicts have been incorporated into the Coordination Drawings, this contractor shall "sign-off" the final Coordination Drawings.

This contractor shall not install any of his work prior to "sign-off" of final Coordination Drawings. If the work specified in this section proceeds prior to sign-off of Coordination Drawings, any change to this work to correct the interferences and conflicts which result will be made by this contractor at no additional cost to the project.

Coordination Drawings are for all contractor's use during construction and shall not be construed as replacing any shop, "as-built", or Record Drawings required elsewhere in these Contract Documents.

Review of Coordination Drawings shall not relieve any contractor from his overall responsibility for coordination of all work performed pursuant to the Contract or from any other requirements of the Contract.

SD-06 Instructions

Framed Instructions; FIO.

Proposed diagrams, instructions, and other sheets, prior to posting. The instructions shall show wiring and control diagrams and complete layout of the entire system. The instructions shall include, in typed form, condensed operating instructions explaining preventive maintenance procedures, methods of checking the system for normal safe operation and procedures for safely starting and stopping the system.

SD-09 Reports

Performance Tests; GA.

Performance test reports in booklet form showing all field tests performed to adjust each component and all field tests performed to prove compliance with the specified performance criteria, upon completion and testing of the installed system. Each test report shall indicate the final position of controls.

Water Treatment Tests; FIO.

The water quality test report shall identify the chemical composition of the heating water. The report shall include a comparison of the condition of the water with the chemical company's recommended conditions. Any required corrective action shall be documented within the report.

SD-13 Certificates

Bolts; FIO.

Written certification that the bolts furnished comply with the requirements of this specification, provided by the bolt manufacturer. The certification shall include illustrations of product-required markings, the

date of manufacture, and the number of each type of bolt to be furnished based on this certification.

SD-19 Operation and Maintenance Manuals

Heating System; FIO.

Six copies of operation and Six copies of maintenance manuals for the equipment furnished. One complete set, prior to performance testing and the remainder upon acceptance. Operating manuals shall detail the step-by-step procedures required for system startup, operation, and shutdown. Operating manuals shall include the manufacturer's name, model number, parts list, and brief description of all equipment and their basic operating features. Maintenance manuals shall list routine maintenance procedures, water treatment procedures, possible breakdowns and repairs, and troubleshooting guides. Maintenance manuals shall include piping and equipment layout and simplified wiring and control diagrams of the system as installed. Manuals shall be provided prior to the field training course.

1.3 QUALIFICATIONS

Procedures and welders shall be qualified in accordance with the code under which the welding is specified to be accomplished.

1.4 DELIVERY AND STORAGE

All equipment delivered and placed in storage shall be stored with protection from the weather, excessive humidity and excessive temperature variation; and dirt, dust, or other contaminants.

1.5 FIELD MEASUREMENTS

The Contractor shall become familiar with all details of the work, verify all dimensions in the field, and shall advise the Contracting Officer of any discrepancy before performing the work.

PART 2 PRODUCTS

2.1 GENERAL MATERIAL AND EQUIPMENT REQUIREMENTS

2.1.1 Standard Products

Materials and equipment shall be the standard products of a manufacturer regularly engaged in the manufacture of such products and shall essentially duplicate items that have been in satisfactory use for at least 2 years prior to bid opening. Equipment shall be supported by a service organization that is, in the opinion of the Contracting Officer, reasonably convenient to the site.

2.1.2 Nameplates

Each major item of equipment shall have the manufacturer's name, address, type or style, model or serial number, and catalog number on a plate secured to the item of equipment.

2.1.3 Equipment Guards and Access

Belts, pulleys, chains, gears, couplings, projecting setscrews, keys, and other rotating parts exposed to personnel contact shall be fully enclosed or guarded in accordance with OSHA requirements. High temperature equipment and piping exposed to contact by personnel or where it creates a potential fire hazard shall be properly guarded or covered with insulation of a type specified.

2.1.4 Asbestos Prohibition

Asbestos and asbestos-containing products shall not be used.

2.1.5 Electrical Work

Electrical motor driven equipment specified shall be provided complete with motors, motor starters, and controls. Electric equipment (including motor efficiencies), and wiring shall be in accordance with Section 16415 ELECTRICAL WORK, INTERIOR. High efficiency motors shall be used. Electrical characteristics shall be as specified or indicated. Motor starters shall be provided complete with thermal overload protection and other appurtenances necessary for the motor control specified. Each motor shall be of sufficient size to drive the equipment at the specified capacity without exceeding the nameplate rating of the motor. Manual or automatic control and protective or signal devices required for the operation specified, and any control wiring, conduit, and connection to power required for controls and devices but not shown shall be provided. Additional requirements for motors, motor controls and wiring shall be as indicated on the Drawings.

2.2 PIPING, TUBING, AND FITTINGS

2.2.1 General

Piping, tubing, and fittings shall be as follows:

a. Low temperature water and Glycol Heat Recovery piping shall be standard weight black steel or copper tubing with malleable iron or steel fittings, solder-joint or flared-tube fittings or grooved mechanical joint fittings. Use dielectric unions wherever dissimilar piping materials meet.

b. Steam pipe shall be standard weight black steel with malleable iron or steel fittings.

c. Condensate return piping and pump discharge piping shall be black steel Schedule 80 with cast iron or malleable iron fittings, Class 250 minimum.

d. Vent piping shall be black steel, Schedule 40, with black malleable iron fittings.

e. Emergency generator exhaust piping and steam exhaust head vent

piping shall be black steel Schedule 80 with cast iron or malleable iron fittings, Cast 250 minimum.

f. Hot water heating piping, including piping from heat exchangers to pool recirculation lines, sizes 2-1/2 in. and larger shall be standard weight black steel with welded malleable iron or steel fittings.

g. Hot water heating piping, including piping from heat exchangers to pool recirculation lines, sizes 2 in. and smaller shall be standard weight black steel or copper tubing with malleable iron or steel fittings, or solder joint fittings. Use dielectric unions wherever dissimilar piping materials meet..

h. Condensate drain piping shall be copper tubing with solder joint or flared tube fittings.

2.2.2 Steel Pipe

Pipe shall conform to ASTM A 53, Grade B, black steel, Schedule 40, unless otherwise specified. Steel pipe to be bent shall be ASTM A 53, Grade A, standard, or Grade B, extra strong weight. Steam pipe shall be ASTM A 53 Grade A.

2.2.3 Gauge Piping

Piping shall be copper tubing for steam and low temperature water.

2.2.4 Copper Tubing

Tubing shall conform to ASTM B 88, Type K. Tubing for compressed air tubing shall conform to ASTM B 251.

2.2.5 Malleable Iron Pipe Fittings

Fittings shall conform to ASME B16.3, type required to match adjacent piping.

2.2.6 Cast Iron Pipe Fittings

Fittings shall conform to ASME B16.1 or ASME B16.4 type required to match adjacent piping.

2.2.7 Steel Pipe Fittings

Fittings shall have the manufacturer's trademark affixed in accordance with MSS SP-25 so as to permanently identify the manufacturer.

2.2.7.1 Welded Fittings

Welded fittings shall conform to ASTM A 234/A 234M with WPA marking. Butt welded fittings shall conform to ASME B16.9, and socket welded fittings shall conform to ASME B16.11.

2.2.7.2 Grooved Mechanical Fittings

Standard fittings shall be of malleable iron conforming to ASTM A 47, ASTM A 47M, Grade 32510, or ductile iron conforming to ASTM A 536, Grade 65-45-12. Fittings may also be constructed of steel, conforming to ASTM A 106, Grade B or ASTM A 53.

2.2.7.3 Grooved Mechanical Pipe Joints

Pipe joints shall conform to AWWA C606. Grooved mechanical joint fittings shall be full flow factory manufactured forged steel fittings. Fittings, couplings, gaskets, and pipe grooving tool or grooved end pipe shall be products of the same manufacturer. Mechanical pipe couplings shall be of the bolted type and shall consist of a housing fabricated in two or more parts, a synthetic rubber gasket, and nuts and bolts to secure unit together. Housings shall be of malleable iron conforming to ASTM A 47, ASTM A 47M, Grade 32510 or ductile iron conforming to ASTM A 536, Grade 65-45-12. Coupling nuts and bolts shall be of steel and conform to ASTM A 183. Gaskets shall be of molded synthetic rubber, Type EPDM with central cavity, pressure responsive configuration and shall conform to ASTM D 2000.

2.2.8 Fittings for Copper Tubing

Wrought copper and bronze fittings shall conform to ASME B16.22 and ASTM B 75. Cast copper alloy fittings shall conform to ASME B16.18 and ASTM B 828. Flared fittings shall conform to ASME B16.26 and ASTM B 62. Adaptors may be used for connecting tubing to flanges and threaded ends of valves and equipment. Extracted brazed tee joints produced with an acceptable tool and installed as recommended by the manufacturer may be used. Cast bronze threaded fittings shall conform to ASME B16.15.

2.2.9 Steel Flanges

Flanged fittings including flanges, bolts, nuts, bolt patterns., etc. shall be in accordance with ASME B16.5 class 150 and shall have the manufacturers trademark affixed in accordance with MSS SP-25. Flange material shall conform to ASTM A 105/A 105M. Flanges for high temperature water systems shall be serrated or raised-face type. Blind flange material shall conform to ASTM A 516/A 516M cold service and ASTM A 515/A 515M for hot service. Bolts shall be high strength or intermediate strength with material conforming to ASTM A 193/A 193M.

2.2.10 Pipe Threads

Pipe threads shall conform to ASME B1.20.1.

2.2.11 Nipples

Nipples shall conform to ASTM A 733 or ASTM B 687, standard weight.

2.2.12 Unions

Unions shall conform to ASME B16.39, type to match adjacent piping.

2.2.13 Adapters

Adapters for copper tubing shall be brass or bronze for soldered fittings.

2.2.14 Dielectric Unions

Unions shall conform to the tensile strength and dimensional requirements specified in ASME B16.39. Unions shall have metal connections on both ends to match adjacent piping. Metal parts of dielectric unions shall be separated so that the electrical current is below 1 percent of the galvanic current which would exist upon metal-to-metal contact.

2.2.15 Grooved Mechanical Joints

Rigid grooved pipe joints may be provided in lieu of unions, welded, flanges or screwed piping connections at chilled water pumps and allied equipment, and on aboveground pipelines in serviceable locations, if the temperature of the circulating medium does not exceed 230 degrees F. Grooved pipe joints shall not be used for vertical risers or in concealed spaces. Flexible grooved joints will not be permitted, except as vibration isolators adjacent to mechanical equipment. Rigid grooved joints shall incorporate an angle bolt pad design which maintains metal-to-metal contact with equal amount of pad offset of housings upon installation to insure positive rigid clamping of the pipe. Designs which can only clamp on the bottom of the groove or which utilize gripping teeth or jaws, or which use misaligned housing bolt holes, or which require a torque wrench or torque specifications, will not be permitted. Rigid grooved pipe couplings shall be used with grooved end pipes, fittings, valves and strainers. Rigid couplings shall be designed for not less than 125 psi service and appropriate for static head plus the pumping head, and shall provide a water-tight joint. Grooved fittings and couplings, and grooving tools shall be provided from the same manufacturer. Segmentally welded elbows shall not be used. Grooves shall be prepared in accordance with the coupling manufacturer's latest published standards. Grooving shall be performed by qualified grooving operators having demonstrated proper grooving procedures in accordance with the tool manufacturer's recommendations. The Contracting Officer shall be notified 24 hours in advance of test to demonstrate operator's capability, and the test shall be performed at the work site, if practical, or at a site agreed upon. The operator shall demonstrate the ability to properly adjust the grooving tool, groove the pipe, and verify the groove dimensions in accordance with the coupling manufacturer's specifications.

2.2.16 Flexible Pipe Connectors

Flexible pipe connectors shall be designed for 125 psi or 150 psi service as appropriate for the static head plus the system head, and 250 degrees F. Connectors shall be installed where indicated and at the connections to all equipment. The flexible section shall be constructed of rubber, tetrafluoroethylene resin, or corrosion-resisting steel, bronze, monel, or galvanized steel. Materials used and the configuration shall be suitable for the pressure, vacuum, temperature, and circulating medium. The flexible section may have threaded, welded, soldered, flanged, grooved, or socket ends. Flanged assemblies shall be equipped with limit bolts to

restrict maximum travel to the manufacturer's standard limits. Unless otherwise indicated, the length of the flexible connectors shall be as recommended by the manufacturer for the service intended. Internal sleeves or liners, compatible with circulating medium, shall be provided when recommended by the manufacturer. Covers to protect the bellows shall be provided.

2.3 MATERIALS AND ACCESSORIES

2.3.1 Iron and Steel Sheets

2.3.1.1 Galvanized Iron and Steel

Galvanized iron and steel shall conform to ASTM A 653/A 653M, with general requirements conforming to ASTM A 653/A 653M. Gauge numbers specified are Manufacturer's Standard Gauge.

2.3.1.2 Uncoated (Black) Steel

Uncoated (black) steel shall conform to ASTM A 366/A 366M or ASTM A 569/A 569M, composition, condition, and finish best suited to the intended use. Gauge numbers specified refer to Manufacturer's Standard Gauge.

2.3.2 Solder

Solder shall conform to ASTM B 32. Solder and flux shall be lead free. Solder flux shall be liquid or paste form, non-corrosive and conform to ASTM B 813.

2.3.3 Solder, Silver

Silver solder shall conform to AWS A5.8.

2.3.4 Thermometers

Thermometers shall have brass, malleable iron, or aluminum alloy case and frame, clear protective face, permanently stabilized glass tube with indicating-fluid column, white face, black numbers, and a 9 inch scale, and thermometers shall have rigid stems with straight, angular, or inclined pattern.

2.3.5 Gauges

Gauges shall conform to ASME B40.1.

2.3.6 Gaskets for Flanges

Composition gaskets shall conform to ASME B16.21. Gaskets shall be nonasbestos compressed material in accordance with ASME B16.21, 1/16 inch thickness, full face or self-centering flat ring type. Gaskets shall contain aramid fibers bonded with styrene butadiene rubber (SBR) or nitrile butadiene rubber (NBR). NBR binder shall be used for hydrocarbon service. Gaskets shall be suitable for pressure and temperatures of piping system.

2.3.7 Polyethylene Tubing

Low-density virgin polyethylene shall conform to ASTM D 1248, Type I, Category 5, Class B or C.

2.3.8 Bellows-Type Joints

Joints shall be flexible, guided expansion joints. Expansion element shall be of stainless steel. Bellows-type expansion joints shall be in accordance with the applicable requirements of EJMA-01 and ASME B31.1 with internal liners.

2.3.9 Expansion Joints

Expansion joints shall provide for either single or double slip of connected pipes, as required or indicated, and for not less than the traverse indicated. Joints shall be designed for hot water working pressure not less than 125 psig and shall be in accordance with applicable requirements of EJMA-01 and ASME B31.1. Joints shall be designed for packing injection under full line pressure. End connections shall be flanged or beveled for welding as indicated. Joints shall be provided with anchor base where required or indicated. Where adjoining pipe is carbon steel, the sliding slip shall be seamless steel plated with a minimum of 2 mils of hard chrome conforming to ASTM B 650. Joint components shall be fabricated from material equivalent to that of the pipeline. Initial settings shall be made in accordance with manufacturer's recommendations to compensate for ambient temperature at time of installation. Pipe alignment guides shall be installed as recommended by joint manufacturer, but in any case shall not be more than 5 feet from expansion joint except for lines 4 inches or smaller, guides shall be installed not more than 2 feet from the joint. Service outlets shall be provided where indicated.

2.3.10 Flexible Ball Joints

Flexible ball joints shall be constructed of alloys as appropriate for the service intended. Where so indicated, the ball joint shall be designed for packing injection under full line pressure to contain leakage. Joint ends shall be threaded (to 2 inches only), grooved, flanged or beveled for welding as indicated or required and shall be capable of absorbing a minimum of 15-degree angular flex and 360-degree rotation. Balls and sockets shall be of equivalent material as the adjoining pipeline. Exterior spherical surface of carbon steel balls shall be plated with 2 mils of hard chrome conforming to ASTM B 650. Ball type joints shall be designed and constructed in accordance with ASME B31.1 and ASME BPV VIII Div 1, where applicable. Flanges where required shall conform to ASME B16.5. Gaskets and compression seals shall be compatible with the service intended.

2.3.11 Pipe Hangers, Inserts, and Supports

Pipe hangers, inserts, and supports shall conform to MSS SP-58 and MSS SP-69.

2.4 VALVES FOR LOW TEMPERATURE WATER HEATING AND STEAM SYSTEMS

2.4.1 Check Valves

Sizes 2-1/2 inches and less, bronze shall conform to MSS SP-80, Type 3 or 4, Class 125. Sizes 3 inches through 24 inches, cast iron shall conform to MSS SP-71, Type III or IV, Class 125.

2.4.2 Globe Valves

Sizes 2-1/2 inches and less, bronze shall conform to MSS SP-80, Type 1, 2 or 3, Class 125. Sizes 3 inches through 12 inches, cast iron shall conform to MSS SP-85, Type III, Class 125.

2.4.3 Angle Valves

Sizes 2-1/2 inches and less, bronze shall conform to MSS SP-80, Type 1, 2 or 3, Class 125. Sizes 3 inches through 12 inches, cast iron shall conform to MSS SP-85, Type III, Class 125.

2.4.4 Gate Valves

Sizes 2-1/2 inches and less, bronze shall conform to MSS SP-80, Type 1 or 2, Class 125. Sizes 3 inches through 48 inches, cast iron shall conform to MSS SP-70, Type I, Class 125, Design OT or OF (OS&Y), bronze trim.

2.4.5 Air Vents

Air vents shall be provided at all piping high points in water systems, with block valve in inlet and internal check valve to allow air vent to be isolated for cleaning and inspection. Outlet connection shall be piped to nearest open site or suitable drain, or terminated 12 inches above finished grade. Pressure rating of air vent shall match pressure rating of piping system. Body and cover shall be cast iron or semi-steel with stainless steel or copper float and stainless steel or bronze internal parts. Air vents installed in piping in chase walls or other inaccessible places shall be provided with an access panel.

2.4.6 Balancing Valves

Balancing valves shall have meter connections with positive shutoff valves. An integral pointer shall register degree of valve opening. Valves shall be calibrated so that flow in gpm can be determined when valve opening in degrees and pressure differential across valve is known. Each balancing valve shall be constructed with internal seals to prevent leakage and shall be supplied with preformed insulation. Valves shall be suitable for 250 degrees F temperature and working pressure of the pipe in which installed. Valve bodies shall be provided with tapped openings and pipe extensions with shutoff valves outside of pipe insulation. The pipe extensions shall be provided with quick connecting hose fittings for a portable meter to measure the pressure differential. One portable differential meter shall be furnished. The meter suitable for the operating pressure specified shall be complete with hoses, vent, and shutoff valves and carrying case. In lieu of the balancing valve with integral metering connections, a ball valve or plug valve with a separately installed orifice plate or venturi tube may be used for balancing. Plug valves and ball valves 8 inches or

larger shall be provided with manual gear operators with position indicators. Furnish and install in the return line from each piece of hydronic equipment (terminal box heating coils, cabinet heaters, unit heaters, fin tube, cooling coils, cabinet convectors, fan coil units, etc.) and at each branch takeoff from a vertical riser on each floor, a one piece, non-ferrous union type bronze/brass flow measuring and balancing/shut-off valve combination. The flow element shall be a low loss/high signal Venturi type (± 2% accuracy) of one to ten rangeability, equipped with dual pete's plug test ports for temperature, pressure and flow measurement. Balancing/shut off valves shall be ball type with large diameter plated ball, teflon seats, blow out proof stem with teflon packing and packing nut, full size handle with grip and memory stop. Entire assembly rated to 400 WOG and tested to 100# after assembly. When used on chilled water systems, provide extensions on all accessories as required.

Furnish a portable meter complete with all accessories for measuring flows. Furnish to the Owner, 6 sets of thermometers and pressure gauges.

2.4.7 Automatic Flow Control Valves

The valves shall be designed to be sensitive to pressure differential across the valve to provide the required opening. The valves shall be selected for the flow required and provided with a permanent nameplate or tag carrying a record of the factory-determined flow rate and flow control pressure levels. Valves shall control the flow within 5 percent of the tag rating. Valves shall be suitable for the maximum operating pressure of 125 psi or 150 percent of the system operating pressure, whichever is greater. Where the available system pressure is not adequate to provide the minimum pressure differential that still allows flow control, the system pump head shall be increased. Valves shall be suitable for the maximum system operating temperature and pressure. Valve materials shall be same as specified for low temperature heating system check, globe, angle and gate valves. Valve operator shall be the electric motor type or pneumatic type as applicable. Valve operator shall be capable of positive shutoff against the system pump head.

2.4.8 Gravity Flow Control Valves

Ends shall be soldered, threaded, or flanged type as applicable, and designed for easy cleaning without disconnecting piping. Valves for copper tubing shall be bronze. Valves shall prevent flow due to gravity when circulators are off.

2.5 COLD WATER CONNECTIONS

Connections shall be provided which include consecutively in line a strainer, backflow prevention device, and water pressure regulator. The backflow prevention device shall be provided as indicated and in compliance with Section 15400 PLUMBING, GENERAL PURPOSE.

2.5.1 Strainers

Basket or Y-type strainers shall be the same size as the pipelines in which they are installed. Strainer bodies shall be rated for 125 pound service,

with bottoms drilled and plugged. Bodies shall have arrows cast on the sides to indicate the direction of flow. Each strainer shall be equipped with a removable cover and sediment basket. Basket shall not be less than 22 gauge and shall have perforations to provide a net free area through the basket of at least four times that of the entering pipe.

2.5.2 Pressure Regulating Valve

Valve shall be a type that will not stick nor allow pressure to build up on the low side. Valve shall be set to maintain a terminal pressure approximately 5 psi in excess of the static head on the system and shall operate within a 20 psi variation regardless of initial pressure and without objectionable noise under any condition of operation.

2.6 FLASH TANK

Tank shall be provided, sized and installed as indicated, and shall be of welded construction utilizing black steel sheets not less than 11 gauge. Tank shall be provided with a handhole and with tapping for the condensate returns, drip lines, vent line, and condensate discharge line to the condensate receiver. Discharge line shall be equipped with a float trap. Tank shall be ASME rated for 250 psig in accordance with ASME BPV VIII Div 1.

2.7 EXPANSION TANK

Pressurization system shall include a replaceable diaphragm-type captive air expansion tank which will accommodate the expanded water of the system generated within the normal operating temperature range, limiting this pressure increase at all components in the system to the maximum allowable pressure at those components. The only air in the system shall be the permanent sealed-in air cushion contained in the diaphragm-type tank. Sizes shall be as indicated. Expansion tank shall be welded steel, constructed, tested and stamped in accordance with ASME BPV VIII Div 1 for a working pressure of 125 psig and precharged to the minimum operating pressure. Tank air chamber shall be fitted with an air charging valve. Tank shall be supported by steel legs or bases for vertical installation or steel saddles for horizontal installations.

2.8 AIR SEPARATOR TANK

External air separation tank shall be steel, constructed, tested, and stamped in accordance with ASME BPV VIII Div 1 for a working pressure of 125 psi. The capacity of the air separation tank indicated is minimum.

2.9 STEAM TRAPS

2.9.1 Float Traps

Capacity, working pressure, and differential pressure of the traps shall be as indicated.

2.9.2 Float-and-Thermostatic Traps

Traps shall be designed for a steam working pressure of approximately 15 psig, but shall operate with a supply pressure of approximately 5 psig. The capacity of the traps shall be as indicated. Trap capacity shall be based on a pressure differential of 1/4 psi. Each float-and-thermostatic trap shall be provided with a hard bronze, monel, or stainless steel valve seat and mechanism and brass float, all of which can be removed easily for inspection or replacement without disturbing the piping connections. Inlet to each trap shall have a cast iron strainer, either an integral part of the trap or a separate item of equipment.

2.9.3 Bucket Traps

Traps shall be inverted or vertical bucket type with automatic air discharge. Traps shall be designed for a working pressure of 150 psig, but shall operate under a steam supply pressure of approximately 40 to 100 psig as required. Each trap shall have a heavy body and cap of fine-grained, gray cast iron. The bucket shall be made of brass; the mechanism of hard bronze; the valve and seat of stainless or monel; or each of equivalent material. Traps shall be tested hydrostatically under a pressure of 200 psig. Traps shall have capacities as indicated when operating under the specified working conditions. A strainer shall be installed in the suction connection of each trap. Impact operated traps, impulse-operated traps, or thermodynamic traps with continuous discharge may be installed in lieu of bucket traps, subject to approval. Thermostatic traps designed for a steam working pressure suitable for the application may be furnished in lieu of the traps specified above. Thermostatic traps shall be equipped with valves and seats of stainless steel or monel metal, and shall have capacities based on a pressure differential not in excess of the following:

Steam Working Pressure, psi	Differential, psi
25-50	20
90-100	80

2.10 HEAT EXCHANGERS

Heat exchangers shall be multiple pass shell and U-tube type, to provide low temperature hot water for the heating system when supplied with steam at the temperatures and pressures indicated. Temperature and pressure for shell and U-tube exchangers shall not exceed 338 degrees F and 100 psig for steam. Exchangers shall be constructed in accordance with ASME BPV VIII Div 1 and certified with ASME stamp secured to unit. U-tube bundles shall be completely removable for cleaning and tube replacement and shall be free to expand with shell. Shells shall be of seamless steel pipe or welded steel construction and tubes shall be seamless tubing as specified below unless otherwise indicated. Tube connections to plates shall be leakproof. Saddles or cradles shall be provided to mount shell and U-tube exchangers. Frames of plate and frame type exchangers shall be fabricated of carbon steel and finished with baked epoxy enamel. Design fouling factor shall be 0.00025.

2.10.1 Steam Heat Exchangers, Shell and U-Tube Type

Exchangers shall operate with steam in shell and low temperature water in tubes. Shell and tube sides shall be designed for 150 psig working pressure and factory tested at 300 psig. Steam, water, condensate, and vacuum and pressure relief valve connections shall be located in accordance with the manufacturer's standard practice. Connections larger than 3 inches shall be ASME 150 pound flanged. Water pressure loss through clean tubes shall not exceed 6 psi and water velocity shall not exceed 6 fps unless otherwise indicated. Minimum water velocity in tubes shall be not less than 1 fps and assure turbulent flow. Tubes shall be seamless copper or copper alloy, constructed in accordance with ASTM B 75 or ASTM B 395, ASTM B 395M, suitable for the temperatures and pressures specified. Tubes shall be not less than 3/4 inch unless otherwise indicated. Maximum steam inlet nozzle velocity shall not exceed 6000 fpm.

2.11 SYSTEM EQUIPMENT AND ACCESSORIES

2.11.1 Circulating Pumps

Pumps shall be as specified in Section 11211 PUMPS: WATER, CENTRIGFUGAL.

2.11.2 Condensate Pumping Unit

Pump shall have a minimum capacity, as indicated on the Drawing Schedule Sheets. The minimum capacity of the tank shall be as indicated on the Drawing Schedule Sheets. Condensate pumping unit shall be of the duplex, horizontal-shaft type, as indicated. Unit shall consist of two pumps, two electric motors and a single receiver. Pumps shall be centrifugal or turbine type, bronze-fitted throughout with impellers of bronze or other corrosion-resistant metal. Pumps shall be free from air-binding when handling condensate with temperatures up to 200 degrees F. Pumps shall be connected directly to dripproof enclosed motors. Receiver shall be cast iron and shall be provided with condensate return, vent, overflow, and pump suction connections, and water level indicator and automatic air vent. Inlet strainer shall be provided in the inlet line to the tank. Vent pipe shall be galvanized steel, and fittings shall be galvanized malleable iron. Vent pipe shall be installed as indicated or directed. Vent piping shall be flashed as specified. Pump, motor, and receiving tank may be mounted on a single base with the receiver piped to the pumps suctions. A gate valve and check valve shall be provided in the discharge connection from each pump.

2.11.2.1 Controls

Enclosed float switches complete with float mechanisms shall be installed in the head of the receiver. The condensate pump shall be controlled automatically by means of the respective float switch that will automatically start the motor when the water in the receiving tank reaches the high level and stop the motor when the water reaches the low level. Motors shall be provided with magnetic across-the-line starters equipped with general purpose enclosure and Automatic-Manual-Off selector switch in the cover.

2.11.2.2 Factory Testing

The Contractor shall submit a certificate of compliance from the pump manufacturer covering the actual test of the unit and certifying that the equipment complies with the indicated requirements.

2.11.3 Pressure Gauges and Thermometers

Gauges shall be provided for each heat exchanger and piping as indicated. A thermometer and pressure gauge shall be provided on the high temperature water supply and return mains. Thermometers shall be separable socket type.

2.11.4 Vacuum Relief Valve

Vacuum relief valve shall be installed on the shell of each shell and U-tube steam heat exchanger and on the factory supplied steam inlet nozzle of each plate and frame heat exchanger. On shutoff of steam supply and condensing of steam, the vacuum relief valve shall automatically admit air to the heat exchanger.

2.11.5 Pressure Relief Valves

One or more pressure relief valves shall be provided for each heat exchanger in accordance with ASME BPV VIII Div 1. The aggregate relieving capacity of the relief valves shall be not less than that required by the above code. Discharge from the valves shall be installed as indicated. Pressure relief valves for steam heat exchangers shall be located on the low temperature water supply coming from near the heat exchanger as indicated. Relief valves for high temperature water heat exchanger shall be installed on the heat exchanger shell.

2.11.6 Drains

A drain connection with 3/4 inch hose bib shall be installed at the lowest point in the low temperature water return main near the heat exchanger and at all other system low points to facilitate draining. In addition, threaded drain connections with threaded cap or plug shall be installed wherever required for thorough draining of the low temperature water system.

2.11.7 Strainers

Basket or Y-type strainer-body connections shall be the same size as the pipe lines in which the connections are installed. The bodies shall have arrows clearly cast on the sides to indicate the direction of flow. Each strainer shall be equipped with an easily removable cover and sediment basket. The body or bottom opening shall be equipped with nipple and gate valve for blowdown. The basket for steam systems shall be of not less than 0.025 inch thick stainless steel, or monel with small perforations of sufficient number to provide a net free area through the basket of at least 2.5 times that of the entering pipe. The flow shall be into the basket and out through the perforations. The strainer bodies for steam systems shall be of cast steel or gray cast iron with bottoms drilled and plugged.

2.12 INSULATION

Shop and field applied insulation shall be as specified in Section 15080 THERMAL INSULATION FOR MECHANICAL SYSTEMS.

2.13 FACTORY PAINTED EXPOSED SPACE HEATING EQUIPMENT

Radiator and convector enclosures shall be coated with the manufacturer's standard rust inhibiting primer for painting in the field as specified in Section 09900 PAINTING, GENERAL. All other exposed heating equipment shall be painted at the factory with the manufacturer's standard primer and enamel finish.

2.14 RADIATORS AND CONVECTORS

The radiator and convector shall be the type and size indicated. The supply and return connections shall be the same size. Nonferrous convectors shall be tested hydrostatically at the factory and proved tight under a pressure of not less than 125 psig. A certified report of these tests shall be furnished in accordance with paragraph SUBMITTALS.

2.14.1 Extended-Surface, Steel, or Nonferrous Tube-Type Radiators

Radiators shall consist of metal fins permanently bonded to steel or nonferrous pipe cores, with threaded or sweat fittings at each end for connecting to external piping. Radiators shall have capacities not less than those indicated, determined in accordance with HYI-01. Radiators shall be equipped with solid-front, slotted horizontal-top cover grilles fabricated from black steel sheets not less than 16 gauge, secured to independent brackets.

2.14.2 Convectors

Convectors shall be constructed of cast iron or of nonferrous alloys, and shall be installed where indicated. Capacity of convectors shall be as indicated. Overall space requirements for convectors shall not be greater than the space provided. Convectors shall be complete with heating elements and enclosing cabinets having front bottom recirculating opening, manual control damper and front top supply grille. All exposed portions of convector cabinets and housings shall be constructed of black sheet steel not less than 14 gauge in color selected by the Contracting Officer. All concealed portions of convector cabinets and housings shall be 16 Gauge black steel with shop primer coats.

2.14.3 Convectors Control

The space temperature shall be maintained automatically by 2-way modulating valves controlled by space scensors as described in Section 15951 DIRECT DIGITAL CONTROL FOR HVAC.

2.15 UNIT HEATERS

Heaters shall be as specified below, and shall have a heating capacity not in excess of 125 percent of the capacity indicated.

2.15.1 Propeller Fan Heaters

Heaters shall be designed for suspension and arranged for horizontal or vertical discharge of air as indicated. Casings shall be not less than 20 gauge black steel and finished with lacquer or enamel. Suitable stationary deflectors shall be provided to assure proper air and heat penetration capacity at floor level based on established design temperature. Suspension from heating pipes will not be permitted. Horizontal discharge type unit heaters shall have discharge or face velocities not in excess of the following:

Unit Capacity, cfm	Face Velocity, fpm
Up to 1,000	800
1,001 to 3,000	900
3,001 and over	1,000

2.15.2 Heating Elements

Heating coils and radiating fins shall be of suitable nonferrous alloy with threaded or brazed fittings at each end for connecting to external piping. The heating elements shall be free to expand or contract without developing leaks and shall be properly pitched for drainage. The elements shall be tested under a hydrostatic pressure of 200 psig and a certified report of the test shall be submitted to the Contracting Officer. Coils shall be suitable for use with water up to 250 degrees F.

2.15.3 Motors

Motors shall be provided with NEMA 250 general purpose enclosure. Motors and motor controls shall otherwise be as specified in Section 16415 ELECTRICAL WORK, INTERIOR. Additional requirements for motors shall be as indicated on the Drawings.

2.15.4 Motor Switches

Motors shall be provided with manual selection switches with "Off," and "Automatic" positions and shall be equipped with thermal overload protection. Additional requirements for motors shall be as indicated on the Drawings.

2.15.5 Controls

Controls shall be provided as specified in Section 15951 DIRECT DIGITAL CONTROLS FOR HVAC.

2.16 HEATING AND VENTILATING UNITS AND AIR HANDLING UNITS

Heating and ventilating units shall be as specified in Section 15895 AIR SUPPLY, DISTRIBUTION, VENTILATION, AND EXHAUST SYSTEMS.

2.17 WATER TREATMENT SYSTEM

The water treatment system shall be capable of manually feeding chemicals into the heating system to prevent corrosion and scale within the heat exchanger and piping system. All water treatment equipment and chemicals shall be furnished and installed by a water treatment company regularly engaged in the installation of water treatment equipment and the provision of water treatment chemicals based upon water condition analyses. The water treatment company shall provide a water sample analysis taken from the building site, each month for one year.

2.17.1 Chemical Shot Feeder

A shot feeder shall be provided as indicated. Size and capacity of feeder shall be based upon local requirements and water analysis. The feeder shall be furnished with an air vent, gauge glass, funnel, valves, fittings, and piping. All materials of construction shall be compatible with the chemicals being used.

2.17.2 Make Up Water Analysis

The make up water conditions shall be provided by the Contractor and reported per ASTM D 596 as follows:

Date of Sample	[_____]	
Temperature	[_____]	degrees F
Silica (SiO2)	[_____]	ppm (mg/1)
Insoluble	[_____]	ppm (mg/1)
Iron and Aluminum Oxides	[_____]	ppm (mg/1)
Calcium (Ca)	[_____]	ppm (mg/1)
Magnesium (Mg)	[_____]	ppm (mg/1)
Sodium and Potassium (Na and K)	[_____]	ppm (mg/1)
Carbonate (HCO3)	[_____]	ppm (mg/1)
Sulfate (SO4)	[_____]	ppm (mg/1)
Chloride (C1)	[_____]	ppm (mg/1)
Nitrate (NO3)	[_____]	ppm (mg/1)
Turbidity	[_____]	unit
pH	[_____]	
Residual Chlorine	[_____]	ppm (mg/1)
Total Alkalinity	[_____]	ppm (meq/1)
Noncarbonate Hardness	[_____]	epm (meq/1)
Total Hardness	[_____]	epm (meq/1)
Dissolved Solids	[_____]	ppm (mg/1)
Fluorine	[_____]	ppm (mg/1)
Conductivity	[_____]	microsiemens/cm

2.17.3 Chemicals

The chemical company shall provide pretreatment chemicals that will remove and permit flushing of mill scale, oil, grease, and other foreign matter from the water heating system. The chemical company shall also provide all treatment and chemicals required for the initial fill of the system and for a period of one year of operation. The chemical company shall determine the correct chemicals and concentrations required for the water treatment. The chemicals shall not be proprietary and shall meet required federal,

state, and local environmental regulations for the treatment of heating water systems and discharge to the sanitary sewer. The chemicals shall remain stable throughout the operating temperature range of the system, and shall be compatible with pump seals and other elements of the system.

2.17.4 Test Kits

All required test kits and reagents for determining the proper water conditions shall be provided.

PART 3 EXECUTION

3.1 INSTALLATION

All work shall be installed as indicated and in accordance with the manufacturer's diagrams and recommendations.

3.2 FIELD PAINTING

Field painting of exposed pipe shall be as specified in Section 09900 PAINTING, GENERAL. Field painting of factory primed equipment shall be as specified in Section 09900 PAINTING, GENERAL.

3.3 WELDING

Structural members shall be welded in accordance with Section 05090 WELDING, STRUCTURAL. Welding and nondestructive testing procedures for piping shall be as specified in Section 05093 WELDING, PRESSURE PIPING.

3.4 PIPING

Unless otherwise specified, pipe and fittings installation shall conform to the requirements of ASME B31.1. Pipe shall be cut accurately to measurements established at the job site and worked into place without springing or forcing, completely clearing all windows, doors, and other openings. Cuttings or other weakening of the building structure to facilitate piping installation will not be permitted without written approval. Pipe or tubing shall be cut square, shall have burrs removed by reaming, and shall be so installed as to permit free expansion and contraction without causing damage to building structure, pipe, joints, or hangers. Changes in direction shall be made with factory made fittings, except that bending of pipe up to 4 inches will be permitted, provided a pipe bender is used and wide sweep bends are formed. The center line radius of bends shall not be less than six diameters of the pipe. Bent pipe showing kinks, wrinkles, flattening, or other malformations will not be accepted. Vent pipes shall be installed through the roof as indicated and shall be flashed as specified. Horizontal mains shall pitch up or down in the direction of flow as indicated. The grade shall be not less than 1 inch in 40 feet. Reducing fittings shall be used for changes in pipe sizes. Open ends of pipelines and equipment shall be capped or plugged during installation to keep dirt or other foreign materials out of the systems. Pipe not otherwise specified shall be uncoated. Unions and other components for copper pipe or tubing shall be brass or bronze. Connections between ferrous and copper piping shall be electrically isolated using

dielectric unions.

3.4.1 Joints

Except as otherwise specified, joints used on steel pipe shall be threaded for fittings 1 inch and smaller; threaded or welded for 1-1/4 inches up through 2-1/2 inches; and welded for 3 inches and larger. Steam piping shall be provided with all welded fittings. Joints between sections of copper tubing or copper pipe shall be flared or sweated. Pipe and fittings 1-1/4 inches and larger installed in inaccessible conduits or trenches beneath concrete floor slabs shall be welded. Unless otherwise specified, connections to equipment shall be made with black malleable iron unions for pipe 2-1/2 inches or smaller in diameter, and with flanges for pipe 3 inches or larger in diameter.

3.4.2 Low Temperature Systems (Hot Water and Glycol Heat Recovery)

Piping may have threaded, welded, flanged or flared, sweated, or grooved mechanical joints as applicable and as specified. Reducing fittings shall be used for changes in pipe sizes. In horizontal lines, reducing fittings shall be the eccentric type to maintain the top of the adjoining pipes at the same level.

3.4.3 Steam Systems

Piping shall have welded joints. Reducing fittings shall be used for changes in pipe sizes. In horizontal steam lines, reducing fittings shall be the eccentric type to maintain the bottom of the lines at the same level. Grooved mechanical joints shall not be used.

3.4.4 Threaded Joints

Threaded joints shall be made with tapered threads properly cut, and shall be made tight with PTFE tape complying with ASTM D 3308, or equivalent thread joint compound applied to the male threads only, and in no case to the fittings.

3.4.5 Welded Joints

Joints shall be fusion-welded unless otherwise required. Changes in direction of piping shall be made with welding fittings only. Branch connection may be made with either welding tees or branch outlet fittings. Branch outlet fittings shall be forged, flared for improvement of flow where attached to the run, and reinforced against external strains.

3.4.6 Flanged Joints or Unions

Flanged joints or unions shall be provided in each line immediately preceding the connection to each piece of equipment or material requiring maintenance such as coils, pumps, control valves, and similar items. Flanged joints shall be faced true, provided with gaskets, and made square and tight. Full-faced gaskets shall be used with cast iron flanges.

3.4.7 Flared and Sweated Pipe and Tubing

Pipe and tubing shall be cut square and burrs shall be removed. Both inside of fittings and outside of tubing shall be cleaned with an abrasive before sweating. Care shall be taken to prevent annealing of fittings and hard drawn tubing when making connection. Installation shall be made in accordance with the manufacturer's recommendations. Changes in direction of piping shall be made with flared or soldered fittings only. Solder and flux shall be lead free. Joints for soldered fittings shall be made with silver solder or 95:5 tin-antimony solder. Cored solder shall not be used. Joints for flared fittings shall be of the compression pattern. Swing joints or offsets shall be provided on all branch connections, mains, and risers to provide for expansion and contraction forces without undue stress to the fittings or to short lengths of pipe or tubing.

3.4.8 Mechanical Tee Joint

An extracted mechanical tee joint may be made in copper tube. Joint shall be produced with an appropriate tool by drilling a pilot hole and drawing out the tube surface to form a collar having a minimum height of three times the thickness of the tube wall. To prevent the branch tube from being inserted beyond the depth of the extracted joint, dimpled depth stops shall be provided. The branch tube shall be notched for proper penetration into fitting to assure a free flow joint. Joints shall be brazed in accordance with NAPHCC-01. Soldered joints will not be permitted.

3.5 CONNECTIONS TO EQUIPMENT

Supply and return connections shall be provided by the Contractor unless otherwise indicated. Valves and traps shall be installed in accordance with the manufacturer's recommendations. Unless otherwise indicated, the size of the supply and return pipes to each piece of equipment shall be not smaller than the connections on the equipment. No bushed connections shall be permitted. Change in sizes shall be made with reducers or increasers only.

3.5.1 Low Temperature Water and Steam and Return Connections

Connections, unless otherwise indicated, shall be made with malleable iron unions for piping 2-1/2 inches or less in diameter and with flanges for pipe 3 inches or more in diameter.

3.6 BRANCH CONNECTIONS

Branches shall pitch up or down as indicated, unless otherwise specified. Connection shall be made to insure unrestricted circulation, eliminate air pockets, and permit drainage of the system. In general water piping shall be pitched upward in the direction of flow.

3.6.1 Low Temperature Water Branches

Branches taken from mains shall pitch with a grade of not less than 1 inch in 10 feet.

3.6.2 Steam Supply and Condensate Branches

Branches taken from mains shall pitch with a grade of not less than 1 inch in 10 feet, unless otherwise indicated.

3.7 RISERS

The location of risers is approximate. Exact locations of the risers shall be as approved. Steam supply downfeed risers shall terminate in a dirt pocket and shall be dripped through a trap to the return line.

3.8 SUPPORTS

3.8.1 General

Hangers used to support piping 2 inches and larger shall be fabricated to permit adequate adjustment after erection while supporting the load. Pipe guides and anchors shall be installed to keep pipes in accurate alignment, to direct the expansion movement, and to prevent buckling, swaying, and undue strain. All piping subjected to vertical movement when operating temperatures exceed ambient temperatures, shall be supported by variable spring hangers and supports or by constant support hangers. Where threaded rods are used for support, they shall not be formed or bent.

3.8.1.1 Seismic Requirements for Pipe Supports, Standard Bracing

All piping and attached valves and equipment shall be supported and braced to resist seismic loads as specified under Section 13080 SEISMIC PROTECTION FOR MECHANICAL, ELECTRICAL EQUIPMENT. Structural steel required for reinforcement to properly support piping, headers, and equipment but not shown shall be provided under this section. Material used for supports shall be as specified under Section 05120 STRUCTURAL STEEL.

3.8.1.2 Structural Attachments

Structural steel brackets required to support piping, headers, and equipment, but not shown, shall be provided under this section. Material and installation shall be as specified under Section 05120 STRUCTURAL STEEL. Pipe hanger loads suspended from steel joist panel points shall not exceed 50 pounds. Loads exceeding 50 pounds shall be suspended from panel points.

3.8.1.3 Multiple Pipe Runs

In the support of multiple pipe runs on a common base member, a clip or clamp shall be used where each pipe crosses the base support member. Spacing of the base support members shall not exceed the hanger and support spacing required for any individual pipe in the multiple pipe run.

3.8.2 Pipe Hangers, Inserts, and Supports

Pipe hangers, inserts and supports shall conform to MSS SP-58 and MSS SP-69, except as specified as follows:

a. Types 5, 12, and 26 shall not be used.

b. Type 3 shall not be used on insulated pipe which has a vapor barrier. Type 3 may be used on insulated pipe that does not have a vapor barrier if clamped directly to the pipe and if the clamp bottom does not extend through the insulation and the top clamp attachment does not contact the insulation during pipe movement.

c. Type 18 inserts shall be secured to concrete forms before concrete is placed. Continuous inserts which allow more adjustment may be used if they otherwise meet the requirements for Type 18 inserts.

d. Type 19 and 23 C-clamps shall be torqued per MSS SP-69 and have both locknuts and retaining devices, furnished by the manufacturer. Field-fabricated C-clamp bodies or retaining devices are not acceptable.

e. Type 20 attachments used on angles and channels shall be furnished with an added malleable iron heel plate or adapter.

f. Type 24 may be used only on trapeze hanger systems or on fabricated frames.

g. Where Type 39 saddle or Type 40 shield are permitted for a particular pipe attachment application, the Type 39 saddle shall be used on all pipe 4 inches and larger.

h. Horizontal pipe supports shall be spaced as specified in MSS SP-69 and a support shall be installed not over 1 foot from the pipe fitting joint at each change in direction of the piping. Pipe supports shall be spaced not over 5 feet apart at valves.

i. Vertical pipe shall be supported at each floor, except at slab-on-grade, and at intervals of not more than 15 feet,except that pipe shall be supported not more than 8 feet from end of risers, and at vent terminations.

j. Type 35 guides using steel, reinforced PTFE or graphite slides shall be provided where required to allow longitudinal pipe movement. Lateral restraints shall be provided as required. Slide materials shall be suitable for the system operating temperatures, atmospheric conditions and bearing loads encountered. Where steel slides do not require provision for restraint or lateral movement, an alternate guide method may be used. On piping 4 inches and larger, a Type 39 saddle may be welded to the pipe and freely rest on a steel plate. On piping under 4 inches, a Type 40 protection shield may be attached to the pipe or insulation and freely rest on a steel slide plate. Where there are high system temperatures and welding to piping is not desirable, then the Type 35 guide shall include a pipe cradle, welded to the guide structure and strapped securely to the pipe. The pipe shall be separated from the slide material by at least 4 inches, or by an amount adequate for the insulation, which ever is greater.

k. Except for Type 3, pipe hangers on horizontal insulated pipe shall

be the size of the outside diameter of the insulation.

3.9 PIPE SLEEVES

3.9.1 Pipe Passing Through Concrete or Masonry

Pipe passing through concrete or masonry walls or concrete floors or roofs shall be provided with pipe sleeves fitted into place at the time of construction. Sleeves shall not be installed in structural members except where indicated or approved. Rectangular and square openings shall be as detailed. Each sleeve shall extend through its respective wall, floor, or roof, and shall be cut flush with each surface. Unless otherwise indicated, sleeves shall provide a minimum of 1/4 inch annular space between bare pipe or insulation surface and sleeves. Sleeves in bearing walls, waterproofing membrane floors, and wet areas shall be steel pipe or cast iron pipe. Sleeves in nonbearing walls, floors, or ceilings may be steel pipe, cast iron pipe, or galvanized sheet metal with lock-type longitudinal seam and of the metal thickness indicated. Except in pipe chases or interior walls, the annular space between pipe and sleeve or between jacket over insulation and sleeve in nonfire rated walls and floors shall be sealed as indicated and specified in Section 07900 JOINT SEALING. Penetrations in fire walls and floors shall be sealed in accordance with Section 07840 FIRESTOPPING.

3.9.2 Pipes Passing Through Waterproofing Membranes

Pipes passing through waterproofing membranes shall be installed through a 4 pound lead-flashing sleeve, a 16 ounce copper sleeve, or a 0.032 inch thick aluminum sleeve, each having an integral skirt or flange. Flashing sleeve shall be suitably formed, and the skirt or flange shall extend 8 inches or more from the pipe and shall be set over the roof or floor membrane in a troweled coating of bituminous cement. The flashing sleeve shall extend up the pipe a minimum of 2 inches above the highest flood level of the roof or a minimum of 10 inches above the roof, whichever is greater, or 10 inches above the floor. The annular space between the flashing sleeve and the bare pipe or between the flashing sleeve and the metal-jacket-covered insulation shall be sealed as indicated. At the Contractor's option, pipes up to and including 10 inches in diameter passing through roof or floor waterproofing membrane may be installed through a cast iron sleeve with caulking recess, anchor lugs, flashing clamp device, and pressure ring with brass bolts. Waterproofing membrane shall be clamped into place and sealant shall be placed in the caulking recess.

3.9.3 Mechanical Seal Assembly

In lieu of a waterproofing clamping flange and caulking and sealing of annular space between pipe and sleeve or conduit and sleeve, a modular mechanical type sealing assembly may be installed. The seals shall consist of interlocking synthetic rubber links shaped to continuously fill the annular space between the pipe/conduit and sleeve with corrosion protected carbon steel bolts, nuts, and pressure plates. The links shall be loosely assembled with bolts to form a continuous rubber belt around the pipe with a pressure plate under each bolt head and each nut. After the seal

assembly is properly positioned in the sleeve, tightening of the bolts shall cause the rubber sealing elements to expand and provide a watertight seal between the pipe/conduit and the sleeve. Each seal assembly shall be sized as recommended by the manufacturer to fit the pipe/conduit and sleeve involved. The Contractor electing to use the modular mechanical type seals shall provide sleeves of the proper diameters.

3.9.4 Counterflashing Alternate

As an alternate to caulking and sealing the annular space between the pipe and flashing sleeve or metal-jacket-covered insulation and flashing sleeve, counterflashing may be by standard roof coupling for threaded pipe up to 6 inches in diameter; lead-flashing sleeve for dry vents and turning the sleeve down into the pipe to form a waterproof joint; or tack-welded or banded-metal rain shield round the pipe and sealing as indicated.

3.9.5 Waterproofing Clamping Flange

Pipe passing through wall waterproofing membrane shall be sleeved as specified. In addition, a waterproofing clamping flange shall be installed as indicated.

3.9.6 Fire Seal

Where pipes pass through fire walls, fire partitions, fire rated pipe chase walls or floors above grade, a fire seal shall be provided as specified in Section 7840 FIRESTOPPING.

3.9.7 Escutcheons

Escutcheons shall be provided at all finished surfaces where exposed piping, bare or covered, passes through floors, walls, or ceilings, except in boiler, utility, or equipment rooms. Escutcheons shall be fastened securely to pipe sleeves or to extensions of sleeves without any part of sleeves being visible. Where sleeves project slightly from floors, special deep-type escutcheons shall be used. Escutcheons shall be chromium-plated iron or chromium-plated brass, either one-piece or split pattern, held in place by internal spring tension or setscrew.

3.10 ANCHORS

Anchors shall be provided where necessary or indicated to localize expansion or prevent undue strain on piping. Anchors shall consist of heavy steel collars with lugs and bolts for clamping and attaching anchor braces, unless otherwise indicated. Anchor braces shall be installed using turnbuckles where required. Supports, anchors, or stays shall not be attached in places where construction will be damaged by installation operations or by the weight or expansion of the pipeline.

3.11 PIPE EXPANSION

The expansion of supply and return pipes shall be provided for by changes in the direction of the run of pipe, by expansion loops, or by expansion joints as indicated. Low temperature water and steam expansion joints may

be one of the types specified.

3.11.1 Expansion Loops

Expansion loops shall provide adequate expansion of the main straight runs of the system within the stress limits specified in ASME B31.1. The loops shall be cold-sprung and installed where indicated. Pipe guides shall be provided as indicated.

3.11.2 Slip-Tube Joints

Slip-tube type expansion joints shall be used for steam and low temperature water systems only and shall be installed where indicated. The joints shall provide for either single or double slip of the connected pipes as indicated and for the traverse indicated. The joints shall be designed for a working temperature and pressure suitable for the application and in no case less than 125 psig. The joints shall be in accordance with applicable requirements of EJMA-01and ASME B31.1. End connections shall be flanged. Anchor bases or support bases shall be provided as indicated or required. Initial setting shall be made in accordance with the manufacturer's recommendations to allow for ambient temperature at time of installation. Pipe alignment guides shall be installed as recommended by the joint manufacturer, but in any case shall be not more than 5 feet from expansion joint, except in lines 4 inches or smaller where guides shall be installed not more that 2 feet from the joint.

3.11.3 Bellows-Type Joint

Bellows-type joint design and installation shall comply with EJMA-01 standards. The joints shall be designed for the working temperature and pressure suitable for the application and shall be not less than 150 psig in any case.

3.11.4 Flexible Ball Joints

Flexible ball joints may be threaded (to 2 inches only), flanged, or welded end as required. The ball-type joint shall be designed and constructed in accordance with the generally accepted engineering principle stated in ASME B31.1, and ASME BPV VIII Div 1, where applicable. Flanges shall conform to the diameter and drilling of ASME B16.5. Molded gaskets furnished shall be suitable for the service intended.

3.12 VALVES AND EQUIPMENT ACCESSORIES

3.12.1 Valves and Equipment

Valves shall be installed at the locations shown or specified, and where required for the proper functioning of the system as directed. Gate valves shall be used unless otherwise indicated, specified, or directed. Valves shall be installed with their stems horizontal to or above the main body of the valve. Valves used with ferrous piping shall have threaded or flanged ends and sweat-type connections for copper tubing.

3.12.2 Gravity Flow-Control Valve

The valve to control the flow of water shall be installed in the supply main near the heat exchanger. The valve shall operate so that when the circulating pump starts, the increased pressure within the main will open the valve; when the pump stops, the valve will close. The valve shall be constructed with a cast iron body and shall be provided with a device whereby the valve can be opened manually to allow gravity circulation. The flow-control valve shall be designed for the intended purpose, and shall be installed as recommended by the manufacturer.

3.12.3 Thermometer Socket

A thermometer well shall be provided in each return line for each circuit in multicircuit systems.

3.12.4 Air Vents

Vents shall be installed where indicated, and on all high points and piping offsets where air can collect or pocket.

3.12.4.1 Steam Air Vents

Steam air vents shall be a quick-acting valve that continuously removes air. Valve shall be constructed of corrosion-resisting metal, shall be designed to withstand the maximum piping system pressure, and shall automatically close tight to prevent escape of steam and condensate. Vent shall be provided with a manual isolation valve. A vent shall be provided on the shell of each steam heat exchanger.

3.13 STEAM TRAPS

Float Traps shall be installed in the condensate line as indicated. Other steam traps shall be installed where indicated.

3.14 UNIT HEATERS

Unit heaters shall be installed as indicated and in accordance with the manufacturer's instructions.

3.15 INSULATION

Thickness of insulation materials for piping and equipment and application shall be in accordance with Section 15080 THERMAL INSULATION FOR MECHANICAL SYSTEMS.

3.16 TESTING AND CLEANING

3.16.1 Pressure Testing

The Contractor shall notify the Contracting Officer 20 days before the tests are to be conducted. The tests shall be performed in the presence of the Contracting Officer. The Contractor shall furnish all instruments and personnel required for the tests. Electricity, steam, and water will be furnished by the Government. All test results shall be accepted before

thermal insulation is installed. The entire low temperature heating system, including heat exchanger, radiators and fittings, shall be hydrostatically tested and proved tight under a pressure of 45 psig for a period of four hours.

3.16.2 Test of Backflow Prevention Assemblies

Backflow prevention assemblies shall be tested in accordance with Section 15400 PLUMBING, GENERAL PURPOSE.

3.16.3 Cleaning

After the hydrostatic and backflow prevention tests have been made and prior to the operating tests, the heat exchanger and piping shall be thoroughly cleaned by filling the system with a solution of 1 pound of caustic soda or 1 pound of trisodium phosphate per 50 gallons of water. Observe the proper safety precautions in the handling and use of these chemicals. The water shall be heated to approximately 150 degrees F, and the solution circulated in the system for a period of 48 hours, then drained and the system thoroughly flushed out with fresh water. Equipment shall be wiped clean, with all traces of oil, dust, dirt, or paint spots removed. The Contractor shall be responsible for maintaining the system in a clean condition until final acceptance. Bearings shall be lubricated with oil or grease as recommended by the manufacturer.

3.16.4 Water Treatment Testing

3.16.4.1 Water Quality Test

The heating water shall be analyzed prior to the acceptance of the facility and a minimum of once a month for a period of one year by the Contractor's water treatment company. The analysis shall include the following information recorded in accordance with ASTM D 596.

Date of Sample	[_____]	
Temperature	[_____]	degrees F
Silica (SiO2)	[_____]	ppm (mg/1)
Insoluble	[_____]	ppm (mg/1)
Iron and Aluminum Oxides	[_____]	ppm (mg/1)
Calcium (Ca)	[_____]	ppm (mg/1)
Magnesium (Mg)	[_____]	ppm (mg/1)
Sodium and Potassium (Na and K)	[_____]	ppm (mg/1)
Carbonate (HCO3)	[_____]	ppm (mg/1)
Sulfate (SO4)	[_____]	ppm (mg/1)
Chloride (C1)	[_____]	ppm (mg/1)
Nitrate (NO3)	[_____]	ppm (mg/1)
Turbidity	[_____]	unit
pH	[_____]	
Residual Chlorine	[_____]	ppm (mg/1)
Total Alkalinity	[_____]	ppm (meq/1)
Noncarbonate Hardness	[_____]	epm (meq/1
Total Hardness	[_____]	epm (meq/1)
Dissolved Solids	[_____]	ppm (mg/1)

Fluorine	[_____] ppm (mg/1)
Conductivity	[_____] microsiemens/cm

3.17 TESTING, ADJUSTING AND BALANCING

Except as specified herein, testing, adjusting, and balancing shall be in accordance with Section 15990 TESTING, ADJUSTING, AND BALANCING OF HVAC SYSTEMS.

3.18 PIPING HYDROSTATIC TEST

After cleaning, water piping shall be hydrostatically tested at a pressure equal to 150 percent of the total system operating pressure for period of time sufficient to inspect every joint in the system and in no case less than 2 hours. Leaks shall be repaired and piping retested until test is successful. No loss of pressure will be allowed. Leaks shall be repaired by re-welding or replacing pipe or fittings. Caulking of joints will not be permitted. Concealed and insulated piping shall be tested in place before covering or concealing.

3.19 MANUFACTURER'S SERVICES

Services of a manufacturer's representative who is experienced in the installation, adjustment, and operation of the equipment specified shall be provided. The representative shall supervise the installation, adjustment, and testing of the equipment.

3.20 FRAMED INSTRUCTIONS

Framed instructions containing wiring and control diagrams under glass or in laminated plastic shall be posted where directed. Condensed operating instructions, prepared in typed form, shall be framed as specified above and posted beside the diagrams. The framed instructions shall be posted before acceptance testing of the system.

3.21 FIELD TRAINING

A field training course shall be provided for designated operating and maintenance staff members. Training shall be provided for a total period of 40 hours of normal working time and shall start after the system is functionally complete but prior to final acceptance tests. Field training shall cover all of the items contained in the approved operation and maintenance manuals.

3.22 WORK ASSOCIATED WITH EMERGENCY GENERATOR INSTALLATION

3.22.1 Furnish and install support systems for emergency generator as follows:

Diesel fuel storage tank;

Diesel fuel transfer system consisting of supply piping, overflow piping, duplex transfer fuel pumps, automatic alternator, solenoid valve in supply line close to tank to shut down when pump stops. Wiring will be provided

so that lag pump starts if lead pump fails to deliver oil. Vent line to be provided with a vent whistle and audible alarm to prevent filling the tank beyond 90% of capacity.

3.22.2 Oil Storage Tanks

1. The tank shall be provided with a suitable folding gauging rod, graduated to indicate the number of gallons of oil in tank.

2. Provide above ground fuel oil storage tanks of capacity and size as indicated on the drawings. Tank shall be suitable for outdoor installation and shall be of the double wall type.

3. Steel fuel oil tanks shall comply with UL 142 and shall be UL listed and labeled.

4. The tank shall be provided with openings for fill pipe, vent pipe, oil suction pipe, oil return pipe and oil meter tubing.

5. Tank shall be 200 gallon capacity and shall be constructed of a minimum 7 gauge steel thickness. The exterior of the tank unit shall be factory painted with a baked enamel finish suitable for exposure to the weather.

3.22.3 Fuel Oil Storage Tank Connections:

1. Provide vent fitting in tank.

2. Provide fill lines with removable single strainer, locking fill boxes, and a spill catch basin.

3. Provide a sounding conneciton, to permit entry of the gauging rod, with a locking cap. Provide graduated gauging rod and calibration chart.

4. Provide pump suction lines with internal vertical pipes extending to within 4 inches of tank bottom.

5. Provide fuel oil supply, return, fill and vent piping utilizing swing joint elbows to allow for ample tank movement and pipe expansion.

3.22.4 Piping

1. General: Provide oil suction, oil supply, oil return piping, and containment piping of standard weight, black steel, ASTM A 120.

2. Provide fittings of standard weight malleable iron, or steel welding type.

3. Provide galvanized steel vent pipe from oil storage tank and fill and gauge piping and with galvanized malleable iron fittings.

3.22.5 Piping Accessories

1. Provide flexible metal hose, corrugated type with braided wire sheath covering, close-pitch annular corrugations, rated for a working pressure of at least 125 psig, 8-inch minmum live length, flanged end corrections, and UL listed for flammable liquid service. Metal for hose and braided wire sheath shall be stainless steel, ASTM 300 series.

2. Provide unions that comply with ANSI B16.39, Class 150 lb.

3. Provide dielectric unions with steel female pipe thread end and copper solder-joint end conforming to dimensional, strength, and pressure requirements of ANSI B16.39 Class 150 lb. Provide galvanized or plated steel parts. Provide union with a water impervious insulation barrier capable of limiting galvanic current to one percent of the short-circuit current in a corresponding bimetallic joint. When dry, union shall withstand a 600 volt breakdown test.

4. Provide welding filler metal that complies with ANSI B31.4 and compatible with the materials to be welded.

5. Provide brazing filler metal that complies with AWS A5.8, and has silver base alloy with melting point not less than 110 degrees.

6. Provide strianers that comply with duplex basket type, with inlet and outlet on the same center line. Provide strainer with cast steel or fabricated steel body, 40 by 40 mesh ASTM 300-series stainless steel baskets.

7. Provide gaskets with dimensions in accordance with ANSI B16.21. Provide gaskets 1/16-inch thick compositoin gaskets for flanged and bolted connections.

8. Provide lock-type design fill box with cast-iron body and bronze inside lock cap, designed for flush mounting, watertight with drain holes in bottom. Furnish a wrench for opening box.

9. A 307, Grade B and for nuts ASTM A 194, Grade-2. Provide bolts and studs with dimensions that comply with ANSI B18.2.1 and ANSI B18.2.2 with threads conforming to ANSI B1.1 course type, with Class 2A fit for bolts and studs, and Class 2B fit for nuts.

3.22.6 Valves:

1. General: Provide hand-operated valves as close as possible to the emergency generators in supply pipes and check valves in return pipes so that oil may be shut off. Provide valves as shown on the drawings and as required for a complete installation.

2. Bronze gate valves 2 inches and smaller shall be in accordance with MSS SP 80 Class 125, wedge disk, non-'rising stem.

3. Valves 2-1/2-inch and larger shall be steel gate valves in

accordance with API 6000, oil service, Class 150.

4. Ball valves shall be in accordance with MSS SP 72, stationary seat ring and floating ball, spring loaded. Ball valves shall be carbon steel with PTFE seat and shall be UL listed.

5. Relief valves shall comply with UL 842 and shall have steel or bronze bodies, corrosion-resistant valve seats, and positive closing to prevent leakage.

6. Provide check valves:

   a. Check valves 1-1/2-inch and smaller shall be bronze, lift or swing type with bronze discs and seats, Class 150.

   b. Check valves 2-inch and larger shall have cast steel bodies, swing or spring-loaded types with bronze or stainless steel discs and seats, bronze trim and stainless steel bolts with flanged connections, Class 150.

   c. Provide cast-steel plug valve with PTFE seat, non-lubricated full port, taper plug, UL listed, and in accordance with API 599.

3.22.7 DUPLEX FUEL OIL PUMP SETS

Provide fuel oil pumps sets in accordance with Section 11211 Pumps Water Centrifugal and Fuel Oil.

3.22.8 Tank Gauge and Leak Detection

1. Provide a tank gauging and leak detection system. The system shall be capable of monitoring the level of fuel oil in the tank and transmitting a 4 to 20 ma signal to the EMCS for a low level alarm and overfill alarm, and have visual capabilities at the panel to indicate tank capacity.

2. The system shall also be capable of monitoring for leak detection and transmitting a 4 to 20 ma signal to EMCS. Leak detector shall be provided as follows:

   a. Floor of fuel oil tank.
   b. Pipe for fuel oil fill line.
   c. Base of containment pipe fuel oil supply and return.
   d. Floor of emergency generator room.

3. Overflow audible alarm to be mounted adjacent to the fill box which will provide an alarm prior to the overflow of the fuel oil storage tank.

4. Unit shall be complete with all necessary components for a full operational tank gauge and leak detection system.

-- End of Section --

SECTION 15562

HEATING AND UTILITIES SYSTEMS, CENTRAL STEAM

PART 1 GENERAL

1.1 REFERENCES

The publications listed below form a part of this specification to the extent referenced. The publications are referred to in the text by basic designation only.

AMERICAN SOCIETY FOR TESTING AND MATERIALS (ASTM)

ASTM A 53	(1997) Pipe, Steel, Black and Hot-Dipped, Zinc-Coated, Welded and Seamless
ASTM A 181/A 181M	(1995b) Carbon Steel Forgings, for General-Purpose Piping
ASTM A 366/A 366M	(1996) Steel, Sheet, Carbon, Cold-Rolled, Commercial Quality
ASTM A 504	(1993) Wrought Carbon Steel Wheels
ASTM A 569/A 569M	(1997) Commercial Steel (CS) Sheet and Strip, Carbon (0.15 Maximum Percent), Hot-Rolled
ASTM A 653/A 653M	(1996) Steel Sheet, Zinc-Coated (Galvanized) or Zinc-Iron Alloy-Coated (Galvannealed) by the Hot-Dip Process
ASTM A 659/A 659M	(1996) Steel, Carbon (0.16 Maximum to 0.25 Maximum Percent), Hot-Rolled Sheet and Strip, Commercial Quality
ASTM A 733	(1993) Welded and Seamless Carbon Steel and Austenitic Stainless Steel Pipe Nipples
ASTM B 32	(1996) Solder Metal
ASTM B 88	(1996) Seamless Copper Water Tube
ASTM B 88M	(1996) Seamless Copper Water Tube (Metric)
ASTM B 251	(1993) General Requirements for Wrought Seamless Copper and Copper-Alloy Tube
ASTM C 700	(1996) Vitrified Clay Pipe, Extra Strength, Standard Strength, and Perforated

ASTM D 1248	(1984; R 1989) Polyethylene Plastics Molding and Extrusion Materials
ASTM D 3308	(1991a) PTFE Resin Skived Tape

AMERICAN SOCIETY OF MECHANICAL ENGINEERS (ASME)

ASME B1.20.1	(1983; R 1992) Pipe Threads, General Purpose (Inch)
ASME B16.1	(1989) Cast Iron Pipe Flanges and Flanged Fittings
ASME B16.3	(1992) Malleable Iron Threaded Fittings
ASME B16.4	(1992) Gray Iron Threaded Fittings
ASME B16.5	(1996) Pipe Flanges and Flanged Fittings NPS 1/2 thru NPS 24
ASME B16.9	(1993) Factory-Made Wrought Steel Buttwelding Fittings
ASME B16.15	(1985; R 1994) Cast Bronze Threaded Fittings Classes 125 and 250
ASME B16.18	(1984; R 1994) Cast Copper Alloy Solder Joint Pressure Fittings
ASME B16.21	(1992) Nonmetallic Flat Gaskets for Pipe Flanges
ASME B16.39	(1986; R 1994) Malleable Iron Threaded Pipe Unions Classes 150, 250, and 300
ASME B31.1	(1995; B31.1a; B31.1b; B31.1c) Power Piping
ASME B40.1	(1991) Gauges - Pressure Indicating Dial Type - Elastic Element
ASME BPV VIII Div 1	(1998) Boiler and Pressure Vessel Code; Section VIII, Pressure Vessels Division 1 - Basic Coverage
ASME PTC 19.3	(1974; R 1986) Instruments and Apparatus: Part 3 Temperature Measurement

AMERICAN WELDING SOCIETY (AWS)

AWS A5.8	(1992) Filler Metals for Brazing and Braze Welding
AWS D1.1	(1996) Structural Welding Code - Steel

EXPANSION JOINT MANUFACTURERS ASSOCIATION (EJMA)

EJMA-01	(1993) EJMA Standards

MANUFACTURERS STANDARDIZATION SOCIETY OF THE VALVE AND FITTINGS INDUSTRY (MSS)

MSS SP-25	(1998) Standard Marking System for Valves, Fittings, Flanges and Unions
MSS SP-58	(1993) Pipe Hangers and Supports - Materials, Design and Manufacture
MSS SP-69	(1996) Pipe Hangers and Supports - Selection and Application
MSS SP-70	(1990) Cast Iron Gate Valves, Flanged and Threaded Ends
MSS SP-71	(1997) Cast Iron Swing Check Valves, Flanges and Threaded Ends
MSS SP-80	(1997) Bronze Gate, Globe, Angle and Check Valves
MSS SP-85	(1994) Cast Iron Globe & Angle Valves, Flanged and Threaded Ends

NATIONAL ASSOCIATION OF PLUMBING-HEATING-COOLING CONTRACTORS (NAPHCC)

NAPHCC-01	(1996) National Standard Plumbing Cod

1.2 GENERAL REQUIREMENTS

1.2.1 Standard Products

Material and equipment shall be the standard products of a manufacturer regularly engaged in the manufacture of the products and shall essentially duplicate items that have been in satisfactory use for at least 2 years prior to bid opening. Equipment shall be supported by a service organization that is, in the opinion of the Contracting Officer, reasonably convenient to the site.

1.2.2 Nameplates

Each major item of equipment shall have the manufacturer's name, address, type or style, model or serial number, and catalog number on a plate secured to the item of equipment.

1.2.3 Prevention of Rust

Unless otherwise specified, surfaces of ferrous metal subject to corrosion

shall be factory prime painted with a rust inhibiting coating and subsequently factory finish painted in accordance with the manufacturer's standard practice. Equipment exposed to high temperature when in service shall be prime and finish painted with the manufacturer's standard heat resistant paint to a minimum thickness of 1 mil.

1.2.4 Equipment Guards and Access

Belts, pulleys, chains, gears, couplings, projecting setscrews, keys, and other rotating parts exposed to personnel contact shall be fully enclosed or guarded. High temperature equipment and piping exposed to contact by personnel or where a fire hazard will be created shall be properly guarded or covered with insulation of a type specified. Items such as catwalks, operating platforms, ladders, and guardrails shall be provided where shown and shall be constructed in accordance with Section 05500 MISCELLANEOUS METAL.

1.2.5 Verification of Dimensions

The Contractor shall become familiar with all details of the work, verify all dimensions in the field, and shall advise the Contracting Officer of any discrepancy before performing any work.

1.2.6 Welding

Structural members shall be welded in accordance with Section 05090 WELDING, STRUCTURAL. Welding and nondestructive testing procedures are specified in Section 05093 WELDING PRESSURE PIPING.

1.2.7 Manufacturer's Services

Services of a manufacturer's representative who is experienced in the installation, adjustment, and operation of the equipment specified shall be provided. The representative shall supervise installing, adjusting, and testing the equipment.

1.2.8 Field Training

Contractor shall conduct a training course for the maintenance and operating staff. The training period of 40 hours normal working time shall start after the system is functionally complete but before the final acceptance tests. The training shall include all of the items contained in the approved operating and maintenance instructions as well as demonstrations of routine maintenance operations. Contracting Office shall be given at least 2 weeks advance notice of such training.

1.2.9 Use of Asbestos Products

Products which contain asbestos are prohibited. This prohibition includes items such as packings or gaskets, even though the item is encapsulated or the asbestos fibers are impregnated with binder material.

1.3 SUBMITTALS

Government approval is required for submittals with a "GA" designation; submittals having an "FIO" designation are for information only. The following shall be submitted in accordance with Section 01330 SUBMITTAL PROCEDURES:

SD-01 Data

Welding; GA. Heating and Utilities System; GA.

A copy of qualified procedures and a list of names and identification symbols of qualified welders and welding operators.

Spare parts data for each item of equipment provided, after approval of the drawings and not later than 2 months before the date of beneficial occupancy. The data shall include a complete list of spare parts and supplies, with current unit prices and supplies, with current unit prices and supply sources.

SD-04 Drawings

Heating and Utilities System; GA.

Detail drawings consisting of schedules, performance charts, brochures, diagrams, drawings, and instructions necessary for installation of the systems as specified. Detail drawings for pumping units and appurtenances, including controls. Drawings shall indicate clearances required for maintenance and operation and shall also contain complete wiring and schematic diagrams, equipment layout and anchorage, and any other details required to demonstrate that the system has been coordinated and will properly function as a unit.

Pipe Anchors; GA.

Detailed drawings of pipe anchors, before installation.

SD-06 Instructions

Framed Instructions; FIO.

Proposed diagrams, instructions, and other sheets, before posting.

Coordination Drawings; FIO.

The Contractor shall prepare Coordination Drawings showing all of the work (equipment, piping, ductwork, conduit, etc.) to be installed as part of the work of this section of the specifications. The Coordination Drawings shall be on reproducible transparencies at not less than 3/8 inch = 1 ft.-0 inch scale.

This contractor shall show all of the work associated with this section of the specifications in the sequence prescribed below. The sequence of coordination drawings shall be HVAC-PLBG-FP-ELEC-GC unless otherwise determined by the contracting officer or the general contractor.

This contractor shall attend a series of meetings arranged by the General Contractor to resolve any real or apparent interferences or conflicts with the work of the other Contractors or with ceiling heights shown on the drawings.

This contractor shall then make adjustments to his work on the Coordination Drawings to resolve any real or apparent interferences or conflicts.

After any real or apparent interferences and conflicts have been incorporated into the Coordination Drawings, this contractor shall "sign-off" the final Coordination Drawings.

This contractor shall not install any of his work prior to "sign-off" of final Coordination Drawings. If the work specified in this section proceeds prior to sign-off of Coordination Drawings, any change to this work to correct the interferences and conflicts which result will be made by this contractor at no additional cost to the project.

Coordination Drawings are for all contractor's use during construction and shall not be construed as replacing any shop, "as-built", or Record Drawings required elsewhere in these Contract Documents.

Review of Coordination Drawings shall not relieve any contractor from his overall responsibility for coordination of all work performed pursuant to the Contract or from any other requirements of the Contract.

SD-09 Reports

Adjusting, Balancing, Testing and Inspection; GA.

Test reports in booklet form showing all field tests performed to adjust each component and all field tests performed to prove compliance with the specified performance criteria, upon completing and testing the system. Each test report shall indicate the final position of controls.

SD-19 Operation and Maintenance Manuals

Heating and Utilities System; FIO.

Six complete copies of operation manuals outlining the step-by-step procedures required for system startup, operation, and shutdown. The manuals shall include the manufacturer's name, model number, service manual, parts list, and a brief description of all equipment and their basic operating features. Six complete copies of maintenance manuals listing routine maintenance procedures, possible breakdowns and repairs, and troubleshooting guides. The manuals shall include piping layout, equipment layout, and simplified wiring and control diagrams of the system as installed.

1.4 DELIVERY AND STORAGE

All equipment delivered and placed in storage shall be stored with protection from weather, humidity and temperature variations, dirt and

dust, or other contaminants.

PART 2 PRODUCTS

2.1 MATERIALS

Materials shall conform to the following:

2.1.1 Iron and Steel Sheets

2.1.1.1 Galvanized Iron and Steel

ASTM A 659/A 659M, ASTM A 653/A 653M with general requirements conforming to ASTM A 504. Gauge numbers specified refer to manufacturer's standard gauge.

2.1.1.2 Uncoated (Black) Steel

ASTM A 366/A 366M or ASTM A 569/A 569M, composition, condition, and finish best suited to the intended use. Gauge numbers specified refer to manufacturer's standard gauge.

2.1.2 Pipe and Pipe Fittings

2.1.2.1 Adapters

Adapters for copper tubing shall be brass or bronze for soldered fittings.

2.1.2.2 Cast Iron Pipe Fittings

ASME B16.1 or ASME B16.4, Class 125, type to match adjacent piping.

2.1.2.3 Clay Sewer Pipe

ASTM C 700, Class 1, Type I, Style a.

2.1.2.4 Copper Tubing

ASTM B 88, ASTM B 88M, Type K or L. For compressed air tubing, ASTM B 251.

2.1.2.5 Fittings for Brass or Copper Pipe

ASME B16.15, Class A or B.

2.1.2.6 Fittings for Copper Tubing

Cast or wrought bronze or wrought copper, soldered-joint, brazed-joint, or flared-joint type, as specified, completely fabricated at the factory. Bronze threaded fittings shall conform to the applicable requirements of ASME B16.15. Cast copper alloy solder joint pressure fittings shall conform to ASME B16.18. Fittings on Type L tubing shall be brazed-joint type of cast or wrought bronze or wrought copper. Fittings on Type K tubing shall be cast bronze flared joint type. Extracted brazed tee joints produced with an acceptable tool and installed as recommended by the

manufacturer may be used.

2.1.2.7 Malleable Iron Pipe Fittings

ASME B16.3, type required to match adjacent piping.

2.1.2.8 Nipples

ASTM A 733, standard weight.

2.1.2.9 Pipe

ASTM A 53, Grade B, black steel. Pipe shall be standard weight unless otherwise specified.

2.1.2.10 Welding Fittings for Pipe

ASME B16.9.

2.1.2.11 Pipe Flanges and Flanged Fittings

Steel flanges, ASTM A 181/A 181M and ASME B16.5. Convoluted flanges shall mate with ASME B16.5, Class 150 flanges. Flanges and fittings shall have the manufacturer's trademark affixed in accordance with MSS SP-25 so as to permanently identify the manufacturer.

2.1.2.12 Pipe Hangers, Inserts, and Supports

MSS SP-58 and MSS SP-69.

2.1.2.13 Pipe Threads

ASME B1.20.1.

2.1.2.14 Solder, Silver

AWS A5.8, or the solder metal shall conform to ASTM B 32 95-5 tin antimony.

2.1.2.15 Unions

ASME B16.39, type to match adjacent piping.

2.1.2.16 Gaskets

ASME B16.21. Approved metallic self-centering style and ring style gasket consisting of metallic retainer and sealing gland may be used for intended service.

2.1.3 Polyethylene Tubing

Low-density virgin polyethylene conforming to ASTM D 1248, Type I, Category 5, Class B or C.

2.1.4 Valves

2.1.4.1 Check Valves

a. Sizes 3 inches and less, bronze: MSS SP-80, Type 3 or 4, Class 125.

b. Sizes 2 inches through 24 inches, cast iron: MSS SP-71, Type III or IV, Class 125.

2.1.4.2 Globe Valves

a. Sizes 3 inches and less, bronze: MSS SP-80, Type 1, 2, and 3, Class 125.

b. Sizes 2 inches through 12 inches, cast iron: MSS SP-85, Type III, Class 125.

2.1.4.3 Angle Valves

a. Sizes 3 inches and less, bronze: MSS SP-80, Type 1, 2, or 3, Class 125.

b. Sizes 2 inches through 12 inches, cast iron: MSS SP-85, Type IV, Class 125.

2.1.4.4 Gate Valves

a. Sizes 3 inches and less, bronze: MSS SP-80, Type 1 or 2, Class 125.

b. Sizes 2 inches through 48 inches, cast iron: MSS SP-70, Type I, Class 125, Design OT or OF (OS & Y), bronze trim.

2.1.4.5 Radiator Valves

Quick-opening disk type, angle-patterned, and constructed of brass. Valves shall be provided with union radiator connections, spring-retained packing, and composition mushroom handles.

2.1.5 Electrical Motors

Motors shall be as specified in Section 16415 ELECTRICAL WORK, INTERIOR.

2.2 ELECTRICAL WORK

Electrical motor driven equipment specified shall be provided complete with motors, motor starters, and controls. Electrical equipment and wiring shall be in accordance with Section 16415 ELECTRICAL WORK, INTERIOR. Electrical characteristics shall be as specified or indicated. Unless otherwise indicated, motors of 1 hp and above shall be high efficiency type. Motor starters shall be provided complete with thermal overload protection and other appurtenances necessary for the motor control specified. Each motor shall be of sufficient size to drive the equipment at the specified capacity without exceeding the nameplate rating of the

motor. Manual or automatic control and protective or signal devices required for the operation specified, and any control wiring required for controls and devices but not shown, shall be provided. Additional requirements for motors, motor controls and wiring shall be as indicated on the Drawings.

2.3 SYSTEM EQUIPMENT

2.3.1 Space Temperature Controls

Space temperature controls shall be in accordance with Section 15951 DIRECT DIGITAL CONTROL FOR HVAC.

2.3.2 Control Valves and Controllers

2.3.2.1 Thermostatic Steam Regulating Valve

Valve shall be adjustable; shall have an operating range of approximately 100 to 200 degrees F and shall be furnished with a thermostatic element, steam valve, connecting capillary tubing, and all required accessories. Thermostatic element shall be inserted in a separable socket in the hot-water supply main. Parts subject to wear shall be constructed of noncorrodible metal and shall be easily replaceable.

2.3.2.2 Pressure-Reducing Valves

Valves designed for a working pressure of not less than 125 psig shall be provided where indicated or otherwise required. Each reducing valve shall be adjusted to maintain the desired terminal pressure within 3 psi, regardless of fluctuations in the initial pressure. Valves shall be quiet in operation. Reducing valves provided in lines for space heating only shall be of the double disk and seat type or sliding gate and plate type. Reducing valves for dead-end service shall be single-seated or sliding gate and plate type. Parts subject to wear shall be constructed of noncorrodible metal and shall be easily replaceable.

2.3.2.3 General Purpose Control Valves and Controllers

Control valves and controllers shall as specified in Section 15951 DIRECT DIGITAL CONTROL FOR HVAC.

2.3.3 Steam Traps

2.3.3.1 Float Traps

Capacity, working pressure, and differential pressure of the traps shall be as indicated.

2.3.3.2 Float-and-Thermostatic Traps

Traps shall be designed for a steam working pressure of approximately 15 psig, but shall operate with a supply pressure of approximately 5 psig. Capacity of the traps shall be as indicated. Trap capacity shall be based on a pressure differential of 1/4 psig. Each float-and-thermostatic trap

shall be provided with a hard-bronze, monel, or stainless steel valve seat and mechanism and brass float, easily removable for inspection or replacement without disturbing the piping connections. Inlet to each trap shall have a cast-iron strainer, either an integral part of the trap or a separate item of equipment.

2.3.3.3 Bucket Traps

Traps shall be inverted or vertical bucket type with automatic air discharge. Traps shall be designed for a working pressure of 150 psig, but shall operate under a steam supply pressure of approximately 40 to 100 psig. Each trap shall have a heavy body and cap of fine-grained, gray cast iron. Bucket shall be made of brass; the mechanism of hard bronze; the valve and seat of stainless or monel; or each of equivalent material. Traps shall be tested hydrostatically under a pressure of 200 psig. Traps shall have capacities as indicated when operating under the specified working conditions. Strainer shall be provided on the inlet connection of each trap. Impact-operated traps, impulse-operated traps, or thermodynamic traps with continuous discharge may be installed in lieu of bucket traps, subject to approval. Thermostatic traps designed for a steam working pressure suitable for the application may be furnished in lieu of the traps specified above. Thermostatic traps shall be equipped with valves and seats of stainless steel, or monel metal, and shall have capacities based on a pressure differential not in excess of the following:

Steam Working Pressure	Differential
kPa psig	kPa psig
25-50 psig	20 psig
90-100 kPa	80 kPa

2.3.3.4 Thermostatic Traps

Traps shall be installed in the return connection from each radiator. Size and capacity of the traps shall be as indicated. Drip traps for mains, risers, and similar live lines shall be installed with a cooling leg of 5 feet of bare 3/4 inch pipe. Capacity of all traps shall be based on a pressure differential of 3 psi. Traps shall be designed for a steam working pressure of 15 psig, but shall operate with a supply pressure of approximately 5 psig. Traps shall be of the angle pattern with union inlet connections. Trap bodies and covers shall be brass.

2.4 SPACE HEATING EQUIPMENT

2.4.1 Unit Heaters

Heaters shall have a heating capacity not in excess of 125 percent of the capacity indicated.

2.4.1.1 Propeller Fan (Type I) Heaters

Heaters shall be designed for suspension and arranged for horizontal

discharge of air. Casings shall be not less than 20 gauge black steel and finished with lacquer or enamel. Suitable stationary or rotating air deflectors shall be provided to ensure proper air and heat penetration capacity at floor level based on established design temperature. Suspension from heating pipes will not be permitted. Fans for vertical discharge type heaters shall operate at speeds not in excess of 1,200 rpm, except that units with 50,000 Btu output capacity or less may operate at speeds up to 1,800 rpm. Horizontal discharge type unit heaters shall have discharge or face velocities not in excess of the following:

Unit capacity, cfm	Face velocity, fpm
Up to 1,000	800
1,001 to 3,000	900
3,001 and over	1,000

2.4.1.2 Heating Elements

Heating coils and radiating fins shall be of nonferrous alloy. Heating elements shall be free to expand or contract and shall be pitched for drainage. Elements shall be tested under a hydrostatic pressure of 200 psig.

2.4.1.3 Motors

Motors shall be provided with manual selection switches for On-Off-Automatic operation and shall be equipped with thermal overload protection.

2.5 SYSTEM ACCESSORIES

2.5.1 Foundations and Anchorage

Foundations and anchorage for pumping units and for other heating equipment shall be in accordance with the manufacturer's requirements, and shall be mounted on inertia bases where required in Section 11211 PUMPS: WATER, CENTRIFUGAL AND FUEL OIL TRANSFER.

2.5.2 Pressure Gauges and Thermometers

Gauges shall be provided for piping as indicated. Gauges shall comply with ASME B40.1 and thermometers shall comply with ASME PTC 19.3. A thermometer and pressure gauge shall be provided on the steam supply and return mains. Thermometers shall be separable socket type.

2.5.3 Vacuum Relief Valve

An approved vacuum relief valve shall be installed where indicated. On shutoff of steam supply and condensing of steam, the vacuum relief valve shall automatically admit air to the system.

2.5.4 Safety Valves

Pop safety valves shall be provided on the low side of each pressure

reducing valve. The valves shall be set to open automatically and to relieve steam at 5 psi in excess of the setting of the reducing valve, or as indicated. Safety valves shall conform to the requirements of ASME BPV VIII Div 1 and shall be installed as indicated.

2.5.5 Drains

A drain connection with 1 inch gate valve or 3/4 inch hose bib shall be installed at the lowest point in the condensate return main. In addition, threaded drain connections with threaded cap or plug shall be installed wherever required for thorough draining of the steam system.

2.6 PIPING AND ACCESSORIES

2.6.1 Pipe and Fittings

2.6.1.1 Steam Piping and Diesel Engine Exhaust Piping and Fittings

Piping shall be black steel, conforming to ASTM A 53, Grade A. Fittings shall be black, malleable iron or steel. Fittings adjacent to valves shall suit valves specified. Reducing fittings shall be used for changes in pipe sizes. In horizontal steam lines, reducing fittings shall be the eccentric type to maintain the bottom of the lines at the same level.

2.6.1.2 Condensate Return and Pumped Condensate Piping and Fittings

Piping shall be black steel, extra strong weight, conforming to ASTM A 53, Grade A. Fittings shall be cast iron or malleable iron, extra heavy.

2.6.1.3 Vent Piping and Fittings

Piping shall be black steel, conforming to ASTM A 53, Grade A. Fittings shall be black malleable iron to suit piping. Plastic materials polyetherimide (PEI) and polyethersulfone (PES) are forbidden to be used for vent piping of combustion gases.

2.6.1.4 Gauge Piping

Piping shall be copper tubing, Type K or L, for steam and condensate 25 psig and less and steel for greater than 25 psig.

2.6.2 Joints

Except as otherwise specified, fittings used on steel pipe shall be threaded for fittings 3/4 inch and smaller; and welded for fittings 1 inches and larger. Joints between sections of copper tubing or pipe shall be flared or sweated. Unless otherwise specified, connections to equipment shall be made with black malleable iron unions for pipe 3/4 inches or smaller in diameter, and with flanges for pipe 1 or more inches in diameter.

2.6.2.1 Bellows-Type Joints

Joints shall be flexible, guided type. Expansion element shall be

stainless steel. Joints shall be in accordance with the applicable requirements of EJMA-01 and ASME B31.1 with internal liners.

2.6.2.2 Flexible Ball Joints

Joints shall be constructed of stainless steel, malleable iron, ductile iron, carbon steel, bronze, or other alloys as appropriate for the service intended.

2.6.2.3 Dielectric Unions

Unions shall conform to the tensile strength and dimensional requirements specified in ASME B16.39. Unions shall have metal connections on both ends to match adjacent piping. Metal parts of dielectric unions shall be separated with nylon insulators to prevent current flow between dissimilar metals. Unions shall be suitable for the required operating pressure and temperatures.

2.6.3 Strainers

Basket or Y-type strainers shall be the same size as the pipelines in which they are installed. The strainer bodies shall be cast-iron rated for 125 pound service, with bottoms drilled and plugged. Bodies shall have arrows cast on the sides to indicate the direction of flow. Each strainer shall be equipped with a removable cover and sediment basket. Basket shall not be less than 22 gauge and shall have perforations to provide a net free area through the basket of at least four times that of the entering pipe.

2.7 SEQUENCE OF AUTOMATIC CONTROLS

Sequence of automatic controls shall be as specified in Section 15951 DIRECT DIGITAL CONTROL FOR HVAC

2.8 FACTORY COATING

Radiator and convector enclosures shall be coated with the manufacturer's standard rust inhibiting primer. Other equipment and component items, when fabricated from ferrous metal, shall be factory finished with the manufacturer's standard finish.

PART 3 EXECUTION

3.1 INSTALLATION

All work shall be installed as indicated and in accordance with the manufacturer's diagrams and recommendations.

3.1.1 Piping

Unless otherwise specified, pipe and fitting installation shall conform to the requirements of ASME B31.1. Pipe shall be cut accurately to measurements established at the jobsite and worked into place without springing or forcing, completely clearing all windows, doors, and other openings. Cutting or other weakening of the building structure to

facilitate piping installation will not be permitted without written approval. Piping or tubing shall be cut square, shall have burrs removed by reaming, and shall be so installed as to permit free expansion and contraction without causing damage to building structure, pipe, joints, or hangers. Filings, dust, or dirt shall be wiped from interior of the pipe or tubing before connections are made. Changes in direction shall be made with fittings, except that bending of pipe up to 4 inches size will be permitted, provided a pipe bender is used and wide sweep bends are formed. The center line radius of bends shall not be less than six diameters of the pipe. Bent pipe showing kinks, wrinkles, flattenings, or other malformations will not be accepted. Vent pipes shall be installed through the roof as directed and shall be flashed as specified. Horizontal supply mains shall pitch up or down in the direction of flow as indicated. The grade shall be not less than 1 inch in 40 feet. Reducing fittings shall be used for changes in pipe sizes. Open ends of pipelines and equipment shall be capped or plugged during installation to keep dirt or other foreign materials out of the systems. Pipe not otherwise specified shall be uncoated. Unions for copper pipe or tubing shall be brass or bronze. Connections between ferrous piping and copper piping shall be electrically isolated from each other with dielectric unions.

3.1.1.1 Threaded Joints

Threaded joints shall be made with tapered threads properly cut, and shall be made tight with polytetrafluoroethylene (PTFE) tape complying with ASTM D 3308, or equivalent joint compound applied to the male threads only, and in no case to the fittings.

3.1.1.2 Welded Joints

Welded joints shall be fusion-welded unless otherwise required. Changes in direction of piping shall be made with welding fittings only. Branch connection may be made with either welding tees or forged branch outlet fittings. Branch outlet fittings shall be forged, flared for improvement of flow where attached to the run, and reinforced against external strains. Beveling, alignment, heat treatment, and inspection of weld shall conform to ASME B31.1. Weld defects shall be removed and repairs made to the weld, or the weld joints shall be entirely removed and rewelded at no additional cost to the Government. Electrodes shall be stored and dried in accordance with AWS D1.1 or as recommended by the manufacturer. Electrodes that have been wetted or that have lost any of their coating shall not be used.

3.1.1.3 Flanges and Unions

Flanges and unions shall be faced true, and made square and tight. Gaskets shall be nonasbestos compressed material in accordance with ASME B16.21, 1/16 inch thickness, full face or self-centering flat ring type. The gaskets shall contain aramid fibers bonded with styrene butadiene rubber (SBR) or nitrile butadiene rubber (NBR). NBR binder shall be used for hydrocarbon service. Union or flange joints shall be provided in each line immediately preceding the connection to each piece of equipment or material requiring maintenance such as coils, pumps, control valves, and other similar items.

3.1.1.4 Flared and Sweated Pipe and Tubing

Flared and sweated pipe and tubing shall be cut square and burrs shall be removed. Both inside of fittings and outside of tubing shall be cleaned with an abrasive before sweating. Care shall be taken to prevent annealing of fittings and hard drawn tubing when making connection. Installation shall be made in accordance with the manufacturer's recommendations. Mitering of joints for elbows and notching of straight runs of pipe for tees will not be permitted. Joints for soldered fittings shall be made with silver solder. Joints for flared-type fittings shall be provided on all branch connections, mains, and risers to provide for expansion and contraction of the pipe without stress to fittings, pipe, or tubing.

3.1.1.5 Copper Tube Extracted Joint

An extracted mechanical tee joint may be used in copper tube. Joint shall be produced with an appropriate tool by drilling a pilot hole and drawing out the tube surface to form a collar having a minimum height of three times the thickness of the tube wall. To prevent the branch tube from being inserted beyond the depth of the extracted joint, dimpled depth stops shall be provided. The branch tube shall be notched for proper penetration into fitting to ensure a free flow joint. Joints shall be brazed in accordance with the NAPHCC-01. Soldered joints will not be permitted.

3.1.2 Connections to Equipment

Supply and return connections shall be provided by the Contractor unless otherwise indicated. Valves and traps shall be installed in accordance with the manufacturer's recommendations. Unless otherwise indicated, the size of the supply and return pipes to each piece of equipment shall not be smaller than the equipment connections. Steam and return connections, unless otherwise indicated, shall be made with malleable iron unions for piping 3/4 inches or less in diameter and with flanges for pipe 1 or more inches in diameter.

3.1.3 Branch Connections

Branches shall pitch up or down as indicated, unless otherwise specified. Connection shall be made to ensure unrestricted circulation; eliminate air pockets; and permit drainage of the system. Steam supply and condensate branches taken from mains shall pitch with a grade of not less than 1 inch in 10 feet, unless otherwise indicated.

3.1.4 Risers

The location of risers is approximate. Exact locations of the risers shall be as approved. Steam supply downfeed risers shall terminate in a dirt pocket and shall be drip trapped to the return.

3.1.5 Supports

3.1.5.1 General

Hangers used to support piping 2 inches and larger shall be fabricated to

permit adequate adjustment after erection while still supporting the load. Pipe guides and anchors shall be installed to keep pipes in accurate alignment, to direct the expansion movement, and to prevent buckling, swaying, and undue strain. All piping subjected to vertical movement when operating temperatures exceed ambient temperatures, shall be supported by variable spring hangers and supports or by constant support hangers. Pipe hanger loads suspended from steel joist between panel points shall not exceed 50 pounds. Loads exceeding 50 pounds shall be suspended from panel points.

3.1.5.2 Pipe Supports and Structural Bracing, Seismic Requirements

Piping and attached valves shall be supported and braced to resist seismic loads as specified in Section 13080, SEISMIC PROTECTION FOR MECHANICAL AND ELECTRICAL EQUIPMENT. Structural steel required for reinforcement to properly support piping, headers, and equipment but not shown shall be provided in this section. Material used for supports shall be as specified in Section 05120 STRUCTURAL STEEL.

3.1.5.3 Pipe Hangers, Inserts, and Supports

Pipe hangers, inserts and supports shall conform to MSS SP-58 and MSS SP-69, except as modified herein.

a. Types 5, 12, and 26 shall not be used.

b. Type 3 shall not be used on insulated pipe.

c. Type 18 inserts shall be secured to concrete forms before concrete is placed. Continuous inserts which allow more adjustment may be used if they otherwise meet the requirements for type 18 inserts.

d. Type 19 and 23 C-clamps shall be torqued per MSS SP-69 and have both locknuts and retaining devices, furnished by the manufacturer. The C-clamp body shall not be constructed from bent plate.

e. Type 20 attachments used on angles and channels shall be furnished with an added malleable iron heel plate or adapter.

f. Type 24 may be used only on trapeze hanger systems or on fabricated frames.

g. Where type 39 saddle or type 40 shield are permitted for a particular pipe attachment application, the type 39 saddle welded to the pipe, shall be used on all pipe 4 inches and larger when the temperature of the medium is 60 degrees F or higher. Type 40 shields shall be used on all piping less than 4 inches and all piping 4 inches and larger carrying medium less than 60 degrees F. A high density insulation insert of a density 8 pcf or greater shall be used under the type 40 shield for piping 2 inches and larger.

h. Horizontal pipe supports shall be spaced as specified in MSS SP-69

and a support shall be installed not over 1 foot from the pipe fitting joint at each change in direction of the piping. Pipe supports shall be spaced not over 5 feet apart at valves. In the support of multiple pipe runs on a common base member, a clip or clamp shall be used where each pipe crosses the base support member. Spacing of the base support members shall not exceed the hanger and support spacing required for any of the individual pipes in the multiple pipe run. The clips or clamps shall be rigidly connected to the common base member. A clearance of 1/8 inch shall be provided between the pipe and clip or clamp for all piping which may be subjected to thermal expansion.

i. Vertical pipe shall be supported at each floor, except at slab-on-grade, and at intervals of not more than 15 feet,not more than 8 feet from end of risers, and at vent terminations.

j. Type 35 guides using steel, reinforced PTFE or graphite slides shall be provided where required to allow longitudinal pipe movement. Lateral restraints shall be provided as required. Slide materials shall be suitable for the system operating temperatures, atmospheric conditions, and bearing loads encountered.

(1) Where steel slides do not require provisions for restraint of lateral movement, an alternate guide method may be used. On piping 4 inches and larger carrying medium 60 degrees F or higher, a type 39 saddle may be welded to the pipe and freely rest on the steel plate. On piping under 4 inches and piping 4 inches and larger carrying medium less than 60 degrees F a type 40 protection shield may be attached to the pipe or insulation and freely rest on a steel plate. A high density insulation insert of density 8 pcf or greater shall be used under all shields on piping 2 inches and larger.

(2) Where there are high system temperatures and welding to piping is not desirable, then the type 35 guide shall include a pipe cradle, welded to the guide structure and strapped securely to the pipe. The pipe shall be separated from the slide material by at least 4 inches, or by an amount adequate for the insulation, whichever is greater.

k. Pipe hangers on horizontal insulated pipe shall be the size of the outside diameter of the insulation. The insulation shall be continuous through the hanger on all pipe sizes and applications.

l. Piping in trenches shall be supported as indicated.

3.1.6 Pipe Sleeves

Pipe passing through concrete or masonry walls or concrete floors or roofs shall be provided with pipe sleeves fitted into place at the time of construction. Sleeves shall not be installed in structural members except where indicated or approved. Rectangular and square openings shall be as detailed on the drawings. Each sleeve shall extend through its respective

wall, floor, or roof, and shall be cut flush with each surface. Unless otherwise indicated, sleeves shall be of such size as to provide a minimum of 1/4 inch all around clearance between sleeve and bare pipe or insulation surface. Sleeves in bearing walls, waterproofing membrane floors, and wet areas shall be steel pipe or cast-iron pipe. Sleeves in nonbearing walls, floors, or ceilings may be steel pipe, cast-iron pipe, or galvanized sheet metal with lock-type longitudinal seam and of the metal thickness indicated. Except in pipe chases or interior walls, the annular space between pipe and sleeve or between jacket over insulation and sleeve in nonfire-rated walls and floors shall be sealed as indicated and specified in Section 07900 JOINT SEALING and in fire-rated walls and floors shall be as indicated and specified in Section 07840 FIRESTOPPING. Pipes passing through wall waterproofing membrane shall be sleeved as described above. In addition, a waterproofing clamping flange shall be installed as indicated.

3.1.6.1 Roof or Floor Penetrations of Waterproofing Membrane

Pipes shall be installed through a 4 pound lead-flashing sleeve, a 16 ounce copper sleeve, or a 0.032 inch thick aluminum sleeve, each having an integral skirt or flange. Flashing sleeve shall be suitably formed. The skirt or flange shall extend 8 or more inches from the pipe and shall be set over the roof or floor membrane in a troweled coating of bituminous cement. The flashing sleeve shall extend up the pipe a minimum of 2 inches above the highest flood level of the roof or a minimum of 10 inches above the floor or roof, whichever is greater. The annular space between the flashing sleeve and the bare pipe or insulation surface shall be sealed as indicated. Pipes up to and including 10 inches in diameter passing through roof or floor waterproofing membrane may be installed through a cast-iron sleeve with caulking recess, anchor lugs, flashing clamp device, and pressure ring with brass bolts. Waterproofing membrane shall be clamped into place and sealant shall be placed in the caulking recess.

3.1.6.2 Optional Sealing of Uninsulated Pipes

A modular mechanical type sealing assembly may be installed. The seals shall consist of interlocking synthetic rubber links shaped to continuously fill the annular space between the pipe/conduit and sleeve with corrosion-protected carbon steel bolts, nuts, and pressure plates. The links shall be loosely assembled with bolts to form a continuous rubber belt around the pipe with a pressure plate under each bolt head and each nut. After the seal assembly is properly positioned in the sleeve, tightening of the bolt shall cause the rubber sealing elements to expand and provide a watertight seal between the pipe/conduit and the sleeve. Each seal assembly shall be sized as recommended by the manufacturer to fit the pipe/conduit and sleeve involved. The Contractor electing to use the modular mechanical type seals shall provide sleeves of the proper diameters.

3.1.6.3 Optional Counterflashing

As an alternate to caulking and sealing the annular space between the flashing sleeve and bare pipe or insulation surface, counterflashing may be by standard roof coupling for threaded pipe up to 6 inchesin diameter; lead-flashing sleeve for dry vents, sleeve turned down into the pipe to

form a waterproof joint; or tack-welded or banded-metal rain shield around the pipe, sealed as indicated.

3.1.6.4 Escutcheons

Escutcheons shall be provided at all finished surfaces where exposed piping, bare or covered, passes through floors, walls, or ceilings, except in boiler, utility, or equipment rooms. Escutcheons shall be fastened securely to pipe sleeves or to extensions of sleeves without any part of sleeves visible. Where sleeves project slightly from floors, special deep-type escutcheons shall be used. Escutcheons shall be chromium-plated iron or brass, either one-piece or split-pattern, held in place by internal spring tension or setscrew.

3.1.7 Anchors

Anchors shall be provided where necessary or indicated to localize expansion or prevent undue strain on piping. Anchors shall consist of heavy steel collars with lugs and bolts for clamping and attaching anchor braces, unless otherwise indicated. Anchor braces shall be installed using turnbuckles where required. Supports, anchors, or stays shall be located to prevent damage by installation operations or by the weight or expansion of the pipeline.

3.1.8 Pipe Expansion

The expansion of supply and return pipes shall be provided for by changes in the direction of the run of pipe, by expansion loops, or by expansion joints as indicated. Condensate and steam expansion joints shall be one of the types specified.

3.1.8.1 Expansion Loops

Expansion loops shall provide adequate expansion of the main straight runs of the system within the stress limits specified in ASME B31.1. Loops shall be cold-sprung and installed where indicated. Pipe guides shall be provided as indicated.

3.1.8.2 Slip-Tube Type Expansion Joints

Slip-tube type expansion joints shall be used for steam and condensate systems only and shall be installed where indicated. Joints shall provide for either single or double slip of the connected pipes and temperature and pressure suitable for application, in no case less than 250 psig. Joints shall be in accordance with applicable requirements of EJMA-01 and ASME B31.1, Type I or III. End connections shall be flanged. Anchor bases or support bases shall be provided as indicated or required. Initial setting shall be made in accordance with the manufacturer's recommendations to allow for ambient temperature at time of installation. Pipe alignment guides shall be installed as recommended by the joint manufacturer, but shall be not more than 5 feet from expansion joint, except in lines 4 inches or smaller where guides shall be installed not more than 2 feet from the joint.

3.1.8.3 Bellows-Type Joint

Bellows-type joint design and installation shall comply with EJMA-01. The joints shall be designed for the working temperature and pressure suitable for the application and shall be not less than 150 psig in any case.

3.1.8.4 Flexible Ball Joints

Flexible ball joints may be threaded, flanged, or welded end as required, and shall be capable of absorbing the normal operating axial, lateral, or angular movements or combination in accordance with ASME B31.1, and ASME BPV VIII Div 1 where applicable. Flanges shall conform to the diameter and drilling of ASME B16.5. Molded gaskets furnished shall be suitable for the service intended.

3.1.9 Valves and Equipment

Valves shall be installed at the locations shown, where specified, and where required for the proper functioning of the system as directed. Gate valves shall be used unless otherwise shown, specified, or directed. Valves shall be installed with their stems horizontal or above. Valves used with ferrous piping shall have threaded or flanged ends for ferrous piping and sweat-type connections for copper tubing.

3.1.9.1 Thermometer Socket

A thermometer well shall be provided in each return line circuit in multicircuit systems.

3.1.9.2 Steam Air Vents

Vents shall be installed where indicated, and at all system high points. Discharge pipes from the vent shall be run to a point as indicated.

Vent shall be a quick-acting valve that continuously removes air. Valve shall be constructed of corrosion-resisting metal, shall be designed to withstand the maximum piping system pressure, and shall automatically close tight to prevent escape of steam and condensate. Vent shall be provided with a manual isolation valve.

3.1.9.3 Pressure Reducing Valves

Valves designed for a working pressure of not less than 125 psig shall be provided wherever indicated or required. Each valve shall be installed with a strainer, a three-valve bypass, and a safety valve.

3.1.10 Steam Traps

Float traps shall be installed in the condensate-discharge line from the flash tank and elsewhere as indicated. All other steam traps shall be installed where indicated.

3.1.11 Unit Heaters

Unit heaters shall be installed as indicated and in accordance with the manufacturer's recommendation.

3.1.12 Insulation

Thickness and application of insulation materials for piping and equipment shall be in accordance with Section 15080 THERMAL INSULATION FOR MECHANICAL SYSTEMS.

3.2 FRAMED INSTRUCTIONS

Framed instructions under glass or in laminated plastic, including wiring and control diagrams showing the complete layout of the entire system, shall be posted where directed. Condensed operating instructions explaining preventive maintenance procedures, methods of checking the system for normal safe operation, and procedures for safely starting and stopping the system shall be prepared in typed form, framed as specified above for the wiring and control diagrams, and posted beside the diagrams. The framed instructions shall be posted before acceptance testing of the system.

3.3 ADJUSTING, BALANCING, TESTING AND INSPECTING

3.3.1 Field Tests

The Contractor shall notify the Contracting Officer 20 days before the performance and acceptance tests are to be conducted. The tests shall be performed in the presence of the Contracting Officer. The Contractor shall furnish all instruments and personnel required for the tests. Electricity, steam, and water will be furnished by the Government.

3.3.1.1 Piping

Before thermal insulation is installed, the entire heating system, including all heating units, valves and fittings, shall be hydrostatically tested at 1-1/2 times the design operating pressure for a minimum of 4 hours.

3.3.2 Cleaning and Adjusting

After hydrostatic tests have been made and prior to the operating tests, piping shall be thoroughly cleaned by filling the system with a solution of one pound of caustic soda or 3 pounds of trisodium phosphate per 100 gallons of water. The water shall be heated to approximately 150 degrees F, and the solution circulated in the system for a period of 48 hours, then drained and thoroughly flushed out with fresh water. Equipment shall be wiped clean, with all traces of oil, dust, dirt, or paint spots removed. The Contractor shall be responsible for maintaining the system in a clean condition until final acceptance. Bearings shall be lubricated as recommended by the manufacturer. Belts shall be adjusted with correct tension, and other miscellaneous equipment shall be adjusted to setting indicated or as recommended by the respective manufacturers.

3.3.3 System Operation

Upon completion and prior to acceptance of the project, the installation shall be subjected to such operating tests as may be required to demonstrate that the steam heating system will operate as specified or indicated. Tests shall be conducted by a qualified test engineer at such times as directed. The Contractor shall provide instruments, facilities, and labor required to conduct the tests. Indicating instruments shall be read at 1/2-hour intervals, unless otherwise directed. Tests shall cover a period of 3 or more hours for each system tested, and test reports shall include the following applicable specific information together with conclusions as to the adequacy of the system:

Time, date, and duration of test.

Flow and pressure of steam to the inlet of the equipment.

Make, model, and size of each piece of equipment.

Dry bulb temperature entering and leaving heating and ventilating units.

Static discharge pressure actually obtained, total cfm handled, and voltmeter and ammeter readings for fan motor during operation.

Heating output for space-heating equipment.

Capacity and discharge pressure of each pump.

Automatic control sequence and operation.

3.3.4 Balancing

Systems shall be completely balanced by a qualified engineer. A complete balancing procedure shall be submitted for approval. All required piping, valves, and connections required to balance the systems shall be provided.

Balancing of air systems shall be as specified in Section 15990 TESTING, ADJUSTING AND BALANCING HVAC SYSTEMS.

3.3.5 Retesting

Any deficiencies revealed during testing shall be corrected and tests shall be reconducted.

3.4 FIELD PAINTING

Painting required for surfaces not otherwise specified, and finish painting of items only primed at the factory, are specified in Section 09900 PAINTING, GENERAL.

-- End of Section --

SECTION 15650

CENTRAL REFRIGERATED AIR-CONDITIONING SYSTEM

PART 1 GENERAL

1.1 REFERENCES

The publications listed below form a part of this specification to the extent referenced. The publications are referred to in the text by basic designation only.

AIR CONDITIONING AND REFRIGERATION INSTITUTE (ARI)

ARI 495	(1993) Refrigerant Liquid Receivers
ARI ANSI/ARI 550	(1992) Centrifugal or Rotary Screw Water-Chilling Packages
ARI 575	(1994) Method of Measuring Machinery Sound Within an Equipment Space
ARI ANSI/ARI 590	(1992) Positive Displacement Compressor Water-Chilling Packages
ARI 700	(1995) Specifications for Fluorocarbon and Other Refrigerants
ARI ANSI/ARI 710	(1986) Liquid-Line Driers
ARI ANSI/ARI 720	(1988) Refrigerant Access Valves and Hose Connectors
ARI 740	(1995) Refrigerant Recovery/Recycling Equipment
ARI 750	(1994) Thermostatic Refrigerant Expansion Valves
ARI 760	(1994) Solenoid Valves for Use with Volatile Refrigerants

AMERICAN BEARING MANUFACTURERS ASSOCIATION (ABEMA)

ABEMA Std 9	(1990) Load Ratings and Fatigue Life for Ball Bearings
ABEMA Std 11	(1990) Load Ratings and Fatigue Life for Roller Bearings

AMERICAN NATIONAL STANDARDS INSTITUTE (ANSI)

ANSI S1.13	(1995) Methods for the Measurement of Sound Pressure Levels

AMERICAN SOCIETY FOR TESTING AND MATERIALS (ASTM)

ASTM A 53	(1997) Pipe, Steel, Black and Hot-Dipped, Zinc-Coated, Welded and Seamless
ASTM A 123	(1989a) Zinc (Hot-Dip Galvanized) Coatings on Iron and Steel Products
ASTM A 153	(1996) Zinc Coating (Hot-Dip) on Iron and Steel Hardware
ASTM A 181/A181M	(1995b) Carbon Steel Forgings for General-Purpose Piping
ASTM A 193/A193M	(1997) Alloy-Steel and Stainless Steel Bolting Materials for High-Temperature Service
ASTM A 234/A234M	(1997) Piping Fittings of Wrought Carbon Steel and Alloy Steel for Moderate and High Temperature Service
ASTM A 307	(1994) Carbon Steel Bolts and Studs, 60 000 PSI Tensile Strength
ASTM A 334/A334M	(1996) Seamless and Welded Carbon and Alloy-Steel Tubes for Low-Temperature Service
ASTM A 733	(1993) Welded and Seamless Carbon Steel and Austenitic Stainless Steel Pipe Nipples
ASTM B 32	(1996) Solder Metal
ASTM B 62	(1993) Composition Bronze or Ounce Metal Castings
ASTM B 75	(1995a) Seamless Copper Tube
ASTM B 88	(1996) Seamless Copper Water Tube
ASTM B 88M	(1996) Seamless Copper Water Tube (Metric)
ASTM B 117	(1997) Operating Salt Spray (FOG) Apparatus
ASTM B 280	(1995a) Seamless Copper Tube for Air Conditioning and Refrigeration Field Service
ASTM B 650	(1995) Electrodeposited Engineering

	Chromium Coatings on Ferrous Substrates
ASTM B 813	(1993) Liquid and Paste Fluxes for Soldering Applications of Copper and Copper Alloy Tube
ASTM C 534	(1994) Preformed Flexible Elastomeric Cellular Thermal Insulation in Sheet and Tubular Form
ASTM D 520	(1984; R 1995) Zinc Dust Pigment
ASTM D 596	(1991; R 1995) Reporting Results of Analysis of Water
ASTM D 3308	(1991a) PTFE Resin Skived Tape
ASTM E 84	(1996a) Surface Burning Characteristics of Building Materials
ASTM F 104	(1993) Nonmetallic Gasket Materials
ASTM F 1199	(1988, R 1993) Cast (All Temperature and Pressures) and Welded Pipe Line Strainers (150 psig and 150 degrees F Maximum)

AMERICAN SOCIETY OF HEATING, REFRIGERATING AND AIR-CONDITIONING ENGINEERS (ASHRAE)

ASHRAE 15	(1994) Safety Code for Mechanical Refrigeration
ASHRAE 34	(1992; Addenda a-j) Number Designation and Safety Classification of Refrigerants

AMERICAN SOCIETY OF MECHANICAL ENGINEERS (ASME)

ASME B1.20.1	(1983; R 1992) Pipe Threads, General Purpose (Inch)
ASME B16.5	(1996) Pipe Flanges and Flanged Fittings NPS 1/2 thru NPS 24
ASME B16.9	(1993) Factory-Made Wrought Steel Buttwelding Fittings
ASME B16.11	(1996) Forged Fittings, Socket-Welding and Threaded
ASME B16.18	(1984; R 1994) Cast Copper Alloy Solder Joint Pressure Fittings
ASME B16.21	(1992) Nonmetallic Flat Gaskets for Pipe Flanges

ASME B16.22	(1995) Wrought Copper and Copper Alloy Solder Joint Pressure Fittings
ASME B16.26	(1988) Cast Copper Alloy Fittings for Flared Copper Tubes
ASME B16.39	(1986; R 1994) Malleable Iron Threaded Pipe Unions Classes 150, 250, and 300
ASME B31.1	(1995; B31.1a; B31.1b; B31.1c) Power Piping
ASME B31.5	(1992; B31.5a) Refrigeration Piping
ASME B40.1	(1991) Gauges - Pressure Indicating Dial Type - Elastic Element
ASME BPV VIII Div 1	(1998) Boiler and Pressure Vessel Code; Section VIII, Pressure Vessels Division 1 - Basic Coverage
ASME BPV IX	(1998) Boiler and Pressure Vessel Code; Section IX, Welding and Brazing Qualifications
ASME ANSI/ASME PTC 23	(1986; Addenda 1992, R 1992) Atmospheric Water Cooling Equipment

AMERICAN WELDING SOCIETY (AWS)

AWS A5.8	(1992) Filler Metals for Brazing and Braze Welding
AWS D1.1	(1996) Structural Welding Code - Steel

COOLING TOWER INSTITUTE (CTI)

CTI ACT-105 Vol 1 Code	(1997) Acceptance Test Code
CTI Std-111	(1986) Gear Speed Reducers

EXPANSION JOINT MANUFACTURERS ASSOCIATION (EJMA)

EJMA-01	(1993; Addenda 1995; Errata 1996) EJMA Standards

MANUFACTURERS STANDARDIZATION SOCIETY OF THE VALVE AND FITTINGS INDUSTRY (MSS)

MSS SP-25	(1998) Standard Marking System for Valves, Fittings, Flanges and Unions
MSS SP-58	(1993) Pipe Hangers and Supports - Materials, Design and Manufacture

MSS SP-67	(1995) Butterfly Valves
MSS SP-69	(1996) Pipe Hangers and Supports - Selection and Application
MSS SP-70	(1990) Cast Iron Gate Valves, Flanged and Threaded Ends
MSS SP-71	(1997) Cast Iron Swing Check Valves, Flanges and Threaded Ends
MSS SP-72	(1992) Ball Valves with Flanged or Butt-Welding Ends for General Service
MSS SP-78	(1987; R 1992) Cast Iron Plug Valves, Flanged and Threaded Ends
MSS SP-80	(1997) Bronze Gate, Globe, Angle and Check Valves
MSS SP-85	(1994) Cast Iron Globe & Angle Valves, Flanged and Threaded Ends
MSS SP-110	(1996) Ball Valves Threaded, Socket Welding, Solder Joint, Grooved and Flared Ends

NATIONAL ELECTRICAL MANUFACTURERS ASSOCIATION (NEMA)

NEMA ICS 1	(1993) Industrial Control and Systems
NEMA ICS 2	(1993) Industrial Control and Systems Controllers, Contactors, and Overload Relays Rated Not More Than 2,000 Volts AC or 750 DC
NEMA MG 1	(1993; Rev 1; Rev 2; Rev 3) Motors and Generators

NATIONAL FIRE PROTECTION ASSOCIATION (NFPA)

NFPA 90A	(1996) Installation of Air Conditioning and Ventilating Systems
NFPA 214	(1996) Water-Cooling Towers
NFPA 255	(1996) Method of Test of Surface Burning Characteristics of Building Material

1.2 SYSTEM DESCRIPTION

This specification section covers the provisions and installation procedures necessary for a complete and totally functional central

refrigerated air-conditioning system as defined herein.

1.3 SUBMITTALS

Government approval is required for submittals with a "GA" designation; submittals having an "FIO" designation are for information only. The following shall be submitted in accordance with Section 01330 SUBMITTAL PROCEDURES:

SD-01 Data

Central Refrigerated Air-Conditioning System; GA.

Manufacturer's catalog data, at least 5 weeks prior to beginning construction, shall be highlighted to show model No., size, options, performance charts and curves, etc. in adequate detail to demonstrate compliance with contract requirements. Data shall include manufacturer's recommended installation instructions and procedures. Data shall be adequate to demonstrate compliance with contract requirements as specified within the paragraphs:

a. Refrigeration System
b. System Components
c. Accessories
d. Cooling Tower
e. Piping Components

If vibration isolation is specified for a unit, vibration isolator literature shall be included containing catalog cuts and certification that the isolation characteristics of the isolators provided meet the manufacturer's recommendations.

Water Treatment Systems; GA.

Six complete copies, at least 5 weeks prior to the purchase of the water treatment system, of the proposed water treatment plan including a layout, control scheme, a list of existing make-up water conditions including the items listed in Paragraph Water Analysis, a list of chemicals, the proportion of chemicals to be added, the final treated water conditions, and a description of environmental concerns for handling the chemicals.

Spare Parts; FIO.

Spare parts data for each different item of material and equipment specified, after approval of the detail drawings and not later than 2 months prior to the date of beneficial occupancy. The data shall include a complete list of parts and supplies, with source of supply.

Qualifications; FIO.

Six copies of qualified procedures, and list of names and identification symbols of qualified welders and welding operators, prior to non-factory welding operations.

SD-04 Drawings

Central Refrigerated Air-Conditioning System ; GA.

Drawings, at least 5 weeks prior to beginning construction, shall provide adequate detail to demonstrate compliance with contract requirements. Drawings shall consist of:

a. Equipment layouts which identify assembly and installation details.

b. Piping layouts which identify all valves and fittings.

c. Plans and elevations which identify clearances required for maintenance and operation.

d. Wiring diagrams which identify each component individually and all interconnected or interlocked relationships between components.

e. Foundation drawings, bolt-setting information, and foundation bolts prior to concrete foundation construction for all equipment indicated or required to have concrete foundations.

f. Details, if piping and equipment are to be supported other than as indicated, which include loadings and type of frames, brackets, stanchions, or other supports.

Coordination Drawings; GA.

The Contractor shall prepare Coordination Drawings showing all of the work (equipment, piping, ductwork, conduit, etc.) to be installed as part of the work of this section of the specifications. The Coordination Drawings shall be on reproducible transparencies at not less than 3/8 inch = 1 ft.-0 inch scale.

This contractor shall show all of the work associated with this section of the specifications in the sequence prescribed below. The sequence of coordination drawings shall be HVAC-PLBG-FP-ELEC-GC unless otherwise determined by the contracting officer or the general contractor.

This contractor shall attend a series of meetings arranged by the General Contractor to resolve any real or apparent interferences or conflicts with the work of the other Contractors or with ceiling heights shown on the drawings.

This contractor shall then make adjustments to his work on the Coordination Drawings to resolve any real or apparent interferences or conflicts.

After any real or apparent interferences and conflicts have been incorporated into the Coordination Drawings, this contractor shall "sign-off" the final Coordination Drawings.

This contractor shall not install any of his work prior to "sign-off" of final Coordination Drawings. If the work specified in this section proceeds prior to sign-off of Coordination Drawings, any change to this work to

correct the interferences and conflicts which result will be made by this contractor at no additional cost to the project.

Coordination Drawings are for all contractor's use during construction and shall not be construed as replacing any shop, "as-built", or Record Drawings required elsewhere in these Contract Documents.

Review of Coordination Drawings shall not relieve any contractor from his overall responsibility for coordination of all work performed pursuant to the Contract or from any other requirements of the Contract.

SD-06 Instructions

Posted Instructions; FIO.

Posted instructions, at least 2 weeks prior to construction completion, shall include equipment layout, wiring and control diagrams, piping, valves and control sequences, and typed condensed operation instructions. The condensed operation instructions shall include preventative maintenance procedures, methods of checking the system for normal and safe operation, and procedures for safely starting and stopping the system. The posted instructions shall be framed under glass or laminated plastic and be posted where indicated by the Contracting Officer.

SD-07 Schedules

Factory Tests; FIO.

Schedules, at least 2 weeks prior to the factory test, which identify the date, time, and location for each test. Schedules shall be submitted for both the Chiller Performance Test and the Chiller Sound Test. The Chiller Performance Test schedule shall also allow the witnessing of the test by a Government Representative.

Tests; FIO.

Test schedules, at least 2 weeks prior to the start of related testing, for each of the field tests, the system performance tests, and the condenser water quality tests. The schedules shall identify the date, time, and location for each test.

Demonstrations; FIO.

A schedule, at least 2 weeks prior to the date of the proposed training course, which identifies the date, time, and location for the training.

SD-08 Statements

Verification of Dimensions; FIO.

A letter, at least 2 weeks prior to beginning construction, including the date the site was visited, conformation of existing conditions, and any discrepancies found.

SD-09 Reports

Factory Tests; GA.

Six copies of the report shall be provided in bound 8 1/2 x 11 inch booklets. Reports shall certify the compliance with performance requirements and follow the format of the required testing standard for both the Chiller Performance Tests and the Chiller Sound Tests. Test report shall include certified calibration report of all test instrumentation. Calibration report shall include certification that all test instrumentation has been calibrated within 6 months prior to the test date, identification of all instrumentation, and certification that all instrumentation complies with requirements of the test standard. Test report shall be submitted 1 week after completion of the factory test.

Field Tests; GA.

Six copies of the report shall be provided in bound 8 1/2 x 11 inch booklets. Reports shall document all phases of tests performed during the Water Pipe Testing, the Refrigerant Pipe Testing, and the Cooling Tower Tests. The report shall include initial test summaries, all repairs/adjustments made, and the final test results.

System Performance Tests; GA.

Six copies of the report shall be provided in bound 8 1/2 x 11 inch booklets. The report shall document compliance with the specified performance criteria upon completion and testing of the system. The report shall indicate the number of days covered by the tests and any conclusions as to the adequacy of the system. The report shall also include the following information and shall be taken at least three different times at outside dry-bulb temperatures that are at least 5 degrees F apart:

a. Date and outside weather conditions.
b. The load on the system based on the following:

(1) The refrigerant used in the system.

(2) Condensing temperature and pressure.

(3) Suction temperature and pressure.

(4) For absorption units, the cooling water pressures and temperatures entering and exiting the absorber and condenser. Also the refrigerant solution pressures, concentrations, and temperatures at each measurable point within the system

(5) Running current, voltage and proper phase sequence for each phase of all motors.

(6) The actual on-site setting of all operating and safety controls.

(7) Chilled water pressure, flow and temperature in and out of

the chiller.

(8) The position of the capacity-reduction gear at machine off, one-third loaded, one-half loaded, two-thirds loaded, and fully loaded.

Condenser Water Quality Tests; FIO.

Test reports, each month for a period of one year after project completion, in bound 8 1/2 x 11 inch booklets. The reports shall identifying the chemical composition of the condenser water. The reports shall also include a comparison of the manufacturer's recommended operating conditions for the cooling tower and condenser in relation to the condition of the condenser water. Any required corrective action shall be taken and documented within the report.

Inspections; FIO.

Six copies of an inspection report, at the completion of one year of service, in bound 8 1/2 x 11 inch booklets. The report shall identifying the condition of each cooling tower and condenser. The report shall also include a comparison of the condition of the cooling tower and condenser with the manufacturer's recommended operating conditions. The report shall identify all actions taken by the Contractor and manufacturer to correct deficiencies during the first year of service.

SD-13 Certificates

Central Refrigerated Air-Conditioning System; FIO.

Where the system, components, or equipment are specified to comply with requirements of AGA, NFPA, ARI, ASHRAE, ASME, or UL, 1 copy of proof of such compliance shall be provided. The label or listing of the specified agency shall be acceptable evidence. In lieu of the label or listing, a written certificate from an approved, nationally recognized testing organization equipped to perform such services, stating that the items have been tested and conform to the requirements and testing methods of the specified agency may be submitted. When performance requirements of this project's drawings and specifications vary from standard ARI rating conditions, computer printouts, catalog, or other application data certified by ARI or a nationally recognized laboratory as described above shall be included. If ARI does not have a current certification program that encompasses such application data, the manufacturer may self certify that his application data complies with project performance requirements in accordance with the specified test standards.

SD-19 Operation and Maintenance Manuals

Operation Manual; GA.

Six complete copies of an operation manual in bound 8 1/2 x 11 inch booklets listing step-by-step procedures required for system startup, operation, abnormal shutdown, emergency shutdown, and normal shutdown at least 4 weeks prior to the first training course. The booklets shall

include the manufacturer's name, model number, and parts list. The manuals shall include the manufacturer's name, model number, service manual, and a brief description of all equipment and their basic operating features.

Maintenance Manual; GA.

Six complete copies of maintenance manual in bound 8 1/2 x 11 inch booklets listing routine maintenance procedures, possible breakdowns and repairs, and a trouble shooting guide. The manuals shall include piping and equipment layouts and simplified wiring and control diagrams of the system as installed.

Water Treatment System; GA.

Six complete copies of operating and maintenance manuals for the step-by-step water treatment procedures. The manuals shall include testing procedures used in determining water quality.

1.4 QUALIFICATIONS

Welding and nondestructive testing procedures are specified in Section 05093 WELDING PRESSURE PIPING.

1.5 SAFETY REQUIREMENTS

Exposed moving parts, parts that produce high operating temperature, parts which may be electrically energized, and parts that may be a hazard to operating personnel shall be insulated, fully enclosed, guarded, or fitted with other types of safety devices. Safety devices shall be installed so that proper operation of equipment is not impaired.

1.6 DELIVERY, STORAGE, AND HANDLING

All equipment delivered and placed in storage shall be stored with protection from the weather, humidity and temperature variations, dirt and dust, or other contaminants.

1.7 PROJECT/SITE CONDITIONS

1.7.1 Verification of Dimensions

The Contractor shall become familiar with all details of the work, verify all dimensions in the field, and shall advise the Contracting Officer of any discrepancy before performing any work.

1.7.2 Drawings

Because of the small scale of the drawings, it is not possible to indicate all offsets, fittings, and accessories that may be required. The Contractor shall carefully investigate the plumbing, fire protection, electrical, structural and finish conditions that would affect the work to be performed and shall arrange such work accordingly, furnishing required offsets, fittings, and accessories to meet such conditions.

PART 2 PRODUCTS

2.1 STANDARD COMMERCIAL PRODUCTS

Materials and equipment shall be standard products of a manufacturer regularly engaged in the manufacturing of such products, which are of a similar material, design and workmanship. The standard products shall have been in satisfactory commercial or industrial use for two years prior to bid opening. The two-year use shall include applications of equipment and materials under similar circumstances and of similar size. The two years experience shall be satisfactorily completed by a product which has been sold or is offered for sale on the commercial market through advertisements, manufacturer's catalogs, or brochures. Products having less than a two-year field service record shall be acceptable if a certified record of satisfactory field operation, for not less than 6000 hours exclusive of the manufacturer's factory tests, can be shown. All products shall be supported by a service organization. The Contractor shall submit a certified list of qualified permanent service organizations for support of the equipment which includes their addresses and qualifications. These service organizations shall be reasonably convenient to the equipment installation and shall be able to render satisfactory service to the equipment on a regular and emergency basis during the warranty period of the contract.

2.2 NAMEPLATES

Each major component of equipment shall have the manufacturer's name, address, type or style, and catalog or serial number on a plate securely attached to the item of equipment. As a minimum, nameplates shall be provided for:

a. Liquid-Chilling Package(s)
b. Compressor(s)
c. Compressor Driver(s)
d. Condenser(s)
e. Liquid Cooler(s)
f. Receiver(s)
g. Pump(s)
h. Pump Motor(s)
i. Cooling Tower(s)
j. Cooling Tower Gear Drive Assemblies
k. Refrigerant Leak Detectors
l. Expansion Tanks
m. Air Separator Tanks

2.3 ELECTRICAL WORK

Electrical equipment, motors, motor starters, and wiring shall be in accordance with Section 16415 ELECTRICAL WORK, INTERIOR. Electrical motor driven equipment specified shall be provided complete with motors, motor starters, and controls. Electrical characteristics and enclosure type shall be as shown, and unless otherwise indicated, all motors of 1 horsepower and above with open, dripproof, or totally enclosed fan cooled enclosures, shall be high efficiency type. Field wiring shall be in

accordance with manufacturer's instructions. Each motor shall conform to NEMA MG 1 and be of sufficient size to drive the equipment at the specified capacity without exceeding the nameplate rating of the motor. Motors shall be continuous duty with the enclosure specified. Motor starters shall be provided complete with thermal overload protection and other appurtenances necessary for the motor control indicated. Motors shall be furnished with a magnetic across-the-line or reduced voltage type starter as required by the manufacturer. Motor starter shall be provided in enclosures constructed in accordance with UL and NEMA 1 enclosures. Manual or automatic control and protective or signal devices required for the operation specified and any control wiring required for controls and devices specified, but not shown, shall be provided. Additional requirements for motors, motor controls and wiring shall be as indicated on the Drawings.

2.4 SELF-CONTAINED LIQUID CHILLER

Unless necessary for delivery purposes, units shall be assembled, leak-tested, charged (refrigerant and oil), and adjusted at the factory. In lieu of delivery constraints, a chiller may be assembled, leak-tested, charged (refrigerant and oil), and adjusted at the job site by a factory representative. Unit components delivered separately shall be sealed and charged with a nitrogen holding charge. Unit assembly shall be completed in strict accordance with manufacturer's recommendations. Chiller shall operate within capacity range and speed recommended by the manufacturer. Parts weighing 50 pounds or more which must be removed for inspection, cleaning, or repair, such as motors, gear boxes, cylinder heads, casing tops, condenser, and cooler heads, shall have lifting eyes or lugs. Chiller shall be provided with factory installed insulation on surfaces subject to sweating including the liquid cooler, suction line piping, economizer, and cooling lines. Chiller shall include all customary auxiliaries deemed necessary by the manufacturer for safe, controlled, automatic operation of the equipment. Chiller shall be provided with a single point wiring connection for incoming power supply. Factory installed insulation shall be provided on all suction piping from the evaporator to the compressor and on the liquid cooler shell. Where motors are the gas-cooled type, factory installed insulation shall be provided on the cold-gas inlet connection to the motor per manufacturer's standard practice. Chiller's condenser and liquid cooler shall be provided with marine water boxes with grooved mechanical connections.

2.4.1 Rotary Screw Type

Rotary screw chiller shall be constructed and rated in accordance with ARI ANSI/ARI 550 or ARI ANSI/ARI 590 as applicable. Chiller shall have a minimum full load EER rating of 19.15 and a part load kW/ton rating of .524 @ 75 percent load in accordance with ARI ANSI/ARI 550 or ARI ANSI/ARI 590 as applicable. Chiller shall conform to ASHRAE 15. As a minimum, chiller shall include the following components as defined in paragraph CHILLER COMPONENTS.

a. Refrigerant and oil
b. Structural base
c. Controls package

d. Centrifugal or rotary screw compressor
e. Compressor driver, electric motor
f. Compressor driver connection
g. Liquid cooler (evaporator)
h. Water-cooled condenser coil
i. Receiver
j. Purge system for chillers which operate below atmospheric pressure
k. Tools

2.5 CHILLER COMPONENTS

2.5.1 Refrigerant and Oil

Refrigerants shall be one of the fluorocarbon gases. Refrigerants shall have number designations and safety classifications in accordance with ASHRAE 34. Refrigerants shall meet the requirements of ARI 700 as a minimum. Refrigerants shall have an Ozone Depletion Potential (ODP) of less than or equal to 0.05. Refrigerants R-22 and R-123 shall not be acceptable.

2.5.2 Structural Base

Chiller and individual chiller components shall be provided with a factory-mounted welded structural steel base or support legs. Chiller and individual chiller components shall be isolated from the building structure by means of vibration isolators with published load ratings. Vibration isolators shall have isolation characteristics as recommended by the manufacturer for the unit supplied and the service intended.

2.5.3 Chiller Refrigerant Circuit

Chiller refrigerant circuit shall be completely piped and factory leak tested. For multicompressor units, not less than 2 independent refrigerant circuits shall be provided. Circuit shall include as a minimum a combination filter and drier, combination sight glass and moisture indicator, liquid-line solenoid valve for reciprocating or scroll units, an electronic or thermostatic expansion valve with external equalizer, charging ports, compressor service valves, and superheat adjustment.

2.5.4 Controls Package

Chiller shall be provided with a complete factory mounted and prewired microprocessor based control system. Controls package shall be unit-mounted which contains as a minimum a digital display or acceptable gauges, an on-auto-off switch, motor starters, power wiring, control wiring, and disconnect switches. Controls package shall provide operating controls, monitoring capabilities, programmable setpoints, safety controls, and EMCS interfaces as defined below.

2.5.4.1 Operating Controls

Chiller shall be provided with the following adjustable operating controls as a minimum.

a. Leaving chilled water temperature control

b. Adjustable timer to prevent compressor from short cycling

c. Automatic lead/lag controls (adjustable) for multiprocessor units

d. Load limiting

e. System capacity control to adjust the unit capacity in accordance with the system load and the programmable setpoints. Controls shall automatically re-cycle the chiller on power interruption.

2.5.4.2 Monitoring Capabilities

During normal operations, the control system shall be capable of monitoring and displaying the following operating parameters. Access and operation of display shall not require opening or removing any panels or doors.

a. Entering and leaving chilled water temperatures
b. Self diagnostic
c. Operation status
d. Operating hours
e. Number of starts
f. Compressor status (on or off)
g. Refrigerant discharge and suction pressures
h. Condenser water entering and leaving temperatures
i. Number of purge cycles over the last 7 days

2.5.4.3 Programmable Setpoints

The control system shall be capable of being reprogrammed directly at the unit. No parameters shall be capable of being changed without first entering a security access code. The programmable setpoints shall include the following as a minimum.

a. Leaving Chilled Water Temperature
b. Leaving Condenser Water Temperature
c. Time Clock/Calender Date

2.5.4.4 Safety Controls with Manual Reset

Chiller shall be provided with the following safety controls which automatically shutdown the chiller and which require manual reset.

a. Low chilled water temperature protection
b. High condenser refrigerant discharge pressure protection
c. Low suction pressure protection
d. Chilled water flow detection
e. Motor current overload and phase loss protection
f. High motor winding temperature protection for hermetic motors
g. Low oil flow protection

2.5.4.5 Safety Controls with Automatic Reset

Chiller shall be provided with the following safety controls which automatically shutdown the chiller and which provide automatic reset.

a. Over/under voltage protection
b. Phase reversal protection
c. Chilled water flow interlock

2.5.4.6 Energy Management Control System (EMCS) Interface

The control system shall communicate all data to a remote integrated DDC processor through a single shielded cable. The data shall include as a minimum all system operating conditions, capacity controls, and safety shutdown conditions. The control system shall also be capable of receiving at a minimum the following operating commands.

a. Remote Unit Start/Stop
b. Remote Chilled Water Reset
c. Remote Condenser Water Reset

2.5.5 Compressor(s)

2.5.5.1 Rotary Screw Compressor(s)

Compressors shall operate stably for indefinite time periods at any stage of capacity reduction without hot-gas bypass. Provision shall be made to insure proper lubrication of bearings and shaft seals on shutdown with or without electric power supply. Rotary screw compressors shall include:

a. An open or hermetic, positive displacement, oil-injected design directly driven by the compressor driver. Compressor shall allow access to internal compressor components for repairs, inspection, and replacement of parts.

b. Rotors which are solid steel forging with sufficient rigidity for proper operation.

c. A maximum rotor operating speed no greater than 3600 RPM.

d. Casings of cast iron, precision machined for minimal clearance about periphery of rotors.

e. A lubrication system of the forced-feed type that provides oil at the proper pressure to all parts requiring lubrication.

f. Shaft main bearings of the sleeve type with heavy duty bushings or rolling element type in accordance with ABEMA Std 9 or ABEMA Std 11. Bearings shall be conservatively loaded and rated for an L(10) life of not less than 200,000 hours.

g. A differential oil pressure or flow cutout to allow the compressor to operate only when the required oil pressure or flow is provided to the bearings.

h. A temperature- or pressure-initiated, hydraulically actuated,

single-slide-valve, capacity-control system to provide minimum automatic capacity modulation from 100 percent to 25 percent.

i. An oil separator and oil return system to remove oil entrained in the refrigerant gas and automatically return the oil to the compressor.

j. Crankcase oil heaters controlled as recommended by the manufacturer.

2.5.6 Compressor Driver, Electric Motor

Motor shall be the polyphase, induction type conforming to NEMA MG 1. Motors shall be suitable for use with the indicated electrical power characteristics and the type of starter provided. Motor starters shall be the reduced voltage, closed-transition type conforming to NEMA ICS 1 and NEMA ICS 2. Motor starter shall be unit mounted as indicated with starter type, wiring, and accessories coordinated by the chiller manufacturer. Starter shall be able to operate in temperatures up to 120 degrees F.

A star-delta, solid state or auto-transformer type (with 50, 65, 80% taps), closed transition compressor motor starter, compatible with the compressor motor, in a NEMA 1 enclosure shall be supplied by the chiller manufacturer. The starter shall be provided with factory mounted circuit breaker with current limiting fuses, or with a current limiting circuit breaker. Operating handle and trip indicator shall be located in the door. Ground fault protection shall be provided with indication of ground fault provided in the starter. Reset capability shall be provided in the starter. The starter shall be provided with distribution fault protection which shall take the compressor motor off line if a momentary voltage failure, or "deep" dip occurs in the electrical service, and be able to automatically restart the motor when the fault is corrected and without damaging the motor. The distribution fault protection shall consist of three-phase current sensing and monitoring devices which shall be capable of detecting distribution faults of 1½ (one and a half) electrical cycles duration and disconnecting the compressor motor within 6 (six) electrical cycles. In addition the starter shall incorporate under voltage protection and phase failure protection, both of the field adjustable time delay type. Ammeter, voltmeter and switches that allow reading of all three phases shall be provided. The ammeter shall be calibrated so that inrush current can be indicated in addition to operating current. The starter shall be provided with a U.L. label attesting to its series connected short circuit rating for faults up to 100,000 amperes.

2.5.7 Compressor Driver Connections

Each machine driven through speed-increasing gears shall be so designed as to assure self-alignment, interchangeable parts, proper lubrication, and minimum of unbalanced forces. Bearings shall be of the sleeve or roller type. Pressure lubrication with pump and cooler shall be provided. Gear cases shall be oil tight. Shaft extensions shall be provided with seals to retain oil and exclude all dust.

2.5.8 Liquid Cooler (Evaporator)

Cooler shall be of the shell-and-coil or shell-and-tube type design. Condenser's refrigerant side shall be designed and factory pressure tested to comply with ASHRAE 15. Condenser's water side shall be designed and factory pressure tested for not less than 150 psi. Cooler shell shall be constructed of seamless or welded steel. Coil bundles shall be totally removable and arranged to drain completely. Tubes shall be seamless copper, plain, integrally finned with smooth bore or integrally finned with enhanced bore. Each tube shall be individually replaceable. Tubes shall be installed into carbon mild steel tube sheets by rolling. Tube baffles shall be properly spaced to provide adequate tube support and cross flow. Performance shall be based on a water velocity not less than 3 fps nor more than 12 fps and a fouling factor of 0.00025.

2.5.9 Water-Cooled Condenser Coil

Condenser shall be of the shell-and-coil or shell-and-tube type design. Condenser's refrigerant side shall be designed and factory pressure tested to comply with ASHRAE 15. Condenser's water side shall be designed and factory pressure tested for not less than 150 psi. Condensers shall be complete with pressure relief valve or rupture disk, water drain connections, and refrigerant charging valve. Low pressure refrigerant condenser shall be provided with a purge valve located at the highest point in the condenser to purge non-condensibles trapped in the condenser. Condenser shell shall be constructed of seamless or welded steel. Coil bundles shall be totally removable and arranged to drain completely. Tubes shall be seamless copper, plain, integrally finned with smooth bore or integrally finned with enhanced bore. Each tube shall be individually replaceable, except for the coaxial tubes. Tube baffles shall be properly spaced to provide adequate tube support and cross flow. Performance shall be based on water velocities not less than 3 fps nor more than 12 fps and a fouling factor of 0.00025.

2.5.10 Receivers

Liquid receivers not already specified herein as an integral factory-mounted part of a package, shall be designed, fitted, and rated in accordance with the recommendations of ARI 495, except as modified herein. Receiver shall bear a stamp certifying compliance with ASME BPV VIII Div 1 and shall meet the requirements of ASHRAE 15. Inner surfaces shall be thoroughly cleaned by sandblasting or other approved means. Each receiver shall have a storage capacity not less than 20 percent in excess of that required for the fully-charged system. Each receiver shall be equipped with inlet, outlet drop pipe, drain plug, purging valve, relief valves of capacity and setting required by ASHRAE 15, and two bull's eye liquid-level sight glasses. Sight glasses shall be in the same vertical plane, 90 degrees apart, perpendicular to the axis of the receiver, and not over 3 inches horizontally from the drop pipe measured along the axis of the receiver. In lieu of bull's eye sight glass, external gauge glass with metal glass guard and automatic closing stop valves may be provided.

2.5.11 Chiller Purge System

Chillers which operate at pressures below atmospheric pressure shall be

provided with a purge system that operates independently of the chiller. Purge system shall automatically remove air, water vapor, and non-condensible gases from the chiller's refrigerant. Purge system shall condense, separate, and return all refrigerant back to the chiller. An oil separator shall be provided with the purge system if required by the manufacturer. Purge system shall not discharge to occupied areas, or create a potential hazard to personnel. Purge system shall include a purge pressure gauge, number of starts counter, and an elapsed time meter. Purge system shall include lights or an alarm which indicate excessive purge or an abnormal air leakage into chiller.

2.5.12 Tools

One complete set of special tools as recommended by the manufacturer for field maintenance of the system shall be provided. Tools shall be mounted on a tool board in the equipment room or contained in a toolbox as directed by the Contracting Officer.

2.5.13 Mounting of Refrigeration Machines

Each machine (cooler-condenser drive-compressor) shall be resiliently supported on steel spring isolation mountings. Provide seismic restraints. The motor-compressor assembly shall be provided with a rigid steel struc-tural base designed to withstand operating forces of the machine. Base shall be furnished as an integral part of the machine by the manufacturer.

Spring mountings shall incorporate unrestrained stable springs with built-in leveling device and resilient vertical limit stops to prevent spring elongation when partial load is removed. The mountings shall also be capable of providing rigid anchor during erection of machine so that is can be erected at a fixed elevation.

Spring mountings shall provide a minimum of one inch static deflection and shall have two layers of acoustical neoprene base pads separated by 16 g. sheet metal.

2.6 ACCESSORIES

2.6.1 Pumps

Pumps shall be as specified in Section 11211 PUMPS: WATER, CENTRIFUGAL.

2.6.2 Expansion Tanks

Expansion tanks shall be welded steel, constructed, tested and stamped in accordance with ASME BPV VIII Div 1 for a working pressure of 125 psig and precharged to the minimum operating pressure. Expansion tanks shall have a replaceable diaphragm and be the captive air type. Tanks shall accommodate expanded water of the system generated within the normal operating temperature range, limiting this pressure increase at all components in the system to the maximum allowable pressure at those components. Each tank air chamber shall be fitted with an air charging valve. Tanks shall be supported by steel legs or bases for vertical installation or steel saddles

for horizontal installations. The only air in the system shall be the permanent sealed-in air cushion contained within the expansion tank.

2.6.3 Air Separator Tanks

External air separation tank shall be steel, constructed, tested, and stamped in accordance with ASME BPV VIII Div 1 for a working pressure of 125 psig.

2.6.4 Refrigerant Leak Detector

A refrigerant leak detector shall be provided in any mechanical room or enclosed area which houses a liquid chiller. The detector shall be located where refrigerant is likely to concentrate. The detector shall be a Halogen-Specific detector which shall be specifically designed for area monitoring. The detector shall have an adjustable sensitivity such that it can detect refrigerant at or above 3 ppm. The detector shall energize the local mechanical ventilation system and initiate an audible and visible alarm upon detecting a refrigerant level greater than 10 ppm.

2.6.5 Signs

Metal signs shall be provided having letters not less than 0.5 inches in height designating the main shut-off valves to each refrigerant vessel, the electrical control of the chiller, and the pressure limiting device.

2.6.6 Refrigerant Recovery/Recycle System

A manually initiated refrigerant recovery/recycle system shall be provided, consisting of a motor-driven, air- or water-cooled, reciprocating condensing unit and a receiver of sufficient capacity to store the entire refrigerant charge of the largest water-chilling system. For refrigerants with atmospheric pressure boiling temperature below 68 degrees F, the receiver shall be sized so that it is no more than 80 percent full at 90 degrees F. For refrigerants with atmospheric pressure boiling temperature above 68 degrees F, the receiver shall be sized so that it is no more than 90 percent full at 90 degrees F. The recovery/recycle system condensing unit shall be assembled as a complete unit and meet the requirements of ASHRAE 15. The system components shall be portable and shall include all valves, connections, and controls required for operation. Receiver and relief devices shall conform to the requirements of ASME BPV VIII Div 1. The recovery/recycle system shall be tested and listed to conform to ARI 740 for refrigerant recovery/recycle systems by a recognized national testing laboratory. For refrigerants with atmospheric pressure boiling temperature below 68 degrees F, the recovery/recycle unit shall have an ARI 740 vapor refrigerant recovery rate of no less than 17.0 lb/minute. For refrigerants with atmospheric pressure boiling temperature above 68 degrees F, the recovery/recycle unit shall have an ARI 740 vapor refrigerant recovery rate of no less than 2.2 lb/minute.

2.6.7 Automatic Tube Brush Cleaning System

2.6.7.1 Brush and Basket Sets

One brush and basket set (one brush and two baskets) shall be furnished for each condenser tube. Brushes shall be made of nylon bristles, with titanium wire. Baskets shall be polypropylene.

2.6.7.2 Flow-Diverter Valve

Each system shall be equipped with one flow-diverter valve specifically designed for the automatic tube brush cleaning system and have parallel flow connections. The flow-diverter valve shall be designed for a working pressure of 150 psig.End connections shall be flanged. Each valve shall be provided with an electrically operated air solenoid valve and position indicator.

2.6.7.3 Control Panel

The control panel shall provide signals to the diverter valve at a preset time interval to reverse water flow to drive the tube brushes down the tubes and then signal the valve to reverse the water flow to drive the brushes back down the tubes to their original position. The controller shall have the following features as a minimum:

a. Timer to initiate the on-load cleaning cycle.
b. Manual override of preset cleaning cycle.
c. Power-on indicator.
d. Diverter-position indicator.
e. Cleaning-cycle-time adjustment
f. Flow-switch bypass.

2.6.8 Field Installed Insulation

Field installed insulation shall be as specified in Section 15080 THERMAL INSULATION FOR MECHANICAL SYSTEMS, except for header and waterbox insulation which shall be flexible cellular insulation in accordance with ASTM C 534, Type I.

2.6.9 Gaskets

Gaskets shall conform to ASTM F 104 - classification for compressed sheet with nitrile binder and acrylic fibers for maximum 700 degrees F service.

2.6.10 Bolts and Nuts

Bolts and nuts, except as required for piping applications, shall be in accordance with ASTM A 307. The bolt head shall be marked to identify the manufacturer and the standard with which the bolt complies in accordance with ASTM A 307.

2.7 COOLING TOWER

2.7.1 Fire Safety

Towers shall conform to NFPA 214. Fire hazard rating for plastic impregnated materials shall not exceed 25. Plastics shall not drip or run during combustion. Determine ratings by ASTM E 84 or NFPA 255.

2.7.2 Zinc-Coated Steel

Components fabricated of zinc-coated steel shall be not lighter than 16 gauge steel, protected against corrosion by a zinc coating. The zinc coating shall conform to ASTM A 153 and ASTM A 123, as applicable and have an extra heavy coating of not less than 2-1/2 ounces per square foot of surface. Galvanized surfaces damaged due to welding shall be coated with zinc rich coating conforming to ASTM D 520, Type 1.

2.7.3 Hardware

Bolts shall be cadmium-plated, zinc-coated steel, or Type 304 stainless steel. Each bolt shall be provided with neoprene and cadmium-plated steel washers under the heads. Hardware shall meet the salt-spray fog test as defined by ASTM B 117.

2.7.4 Noise Control

Sound power levels (in decibels with a reference pressure of 0.0002 microbar) of the cooling tower shall not exceed the maximum permitted decibel levels for the designated octave band as set forth in the following tables. Sound power level data for the cooling tower shall be based on tests conducted in accordance with ANSI S1.13. These sound power values are based on 5.0 feet from fan discharge.

Octave Band (in Hz)	63	125	250	500	1000	2000	4000	8000
Sound Power Level in dB	84	83	84	80	77	70	64	57

2.7.5 Conventional Type Tower

a. Factory-Assembled: Each tower shall be the induced mechanical draft, counterflow, factory fabricated, factory-assembled type.

2.7.5.1 Casing

Casing shall be constructed of zinc-coated steel. Towers shall be designed and constructed to withstand a wind pressure of not less than 30 pound-force per square foot (psf) on external surfaces. Fan decks shall be designed to withstand a live load of not less than 40 psf in addition to the concentrated or distributed loads of equipment mounted on the fan decks. A 15-percent increased loading shall be included for ice or snow load. Air inlet and discharge terminations shall have flanged or lipped projections for connecting ductwork.

2.7.5.2 Cold-Water Basin

Basin shall be completely watertight and constructed of Type 304 stainless steel. Basin shall be constructed and installed to ensure that air will not be entrained in outlets when operating and no water will overflow on shutdown. Each individual sump shall be provided with an individual

outlet. Each outlet shall be provided with a 1/2 inch mesh, zinc-coated steel wire securely mounted to prevent trash from entering the outlet. Each basin shall be provided with overflow and valved drain connections. Each basin shall be provided with a float-controlled, makeup water valve as indicated. The makeup water shall discharge not less than 2 inches or two pipe diameters, whichever is greater, above the top of the basin.

2.7.5.3 Hot-Water Distribution

Design water distribution systems for each cell of each tower so that a water flow of 140 percent of specified water flow will not cause overflowing or splashing. Water distribution systems shall be accessible and permit flexibility of operation. Hot water basin shall be constructed of Type 304 stainless steel. Provide removable covers of same material and thickness for entire water distribution basin. Support covers by basin sides with top of cover flush with top of basin. Provide separate regulation and stop valves for complete balancing and complete shutoff from each cell. Systems shall be self-draining and nonclogging. The water distribution system shall be either one of the following types.

a. Open Basins: Basins shall be provided with a splash box or baffles to minimize splashing of incoming hot water, holes that evenly distribute the water over the entire decking area, and a basin cover. Holes used in a water basin shall be provided with ceramic or plastic orifice inserts.

b. Spray Nozzles: Spray nozzles shall be cleanable; stainless steel, bronze, or high-impact plastic, nonclogging, removable; and, spaced for even distribution.

2.7.5.4 Fill Material

The fill shall be the following materials as specified. Zinc-coated steel shall have a minimum of 2.5 ounces per square foot of surface. Fill material shall be free to expand or contract without warping. Fill shall be removable or otherwise made accessible for cleaning. Provide space supports as required to prevent sagging and misalignment, and provide for an even mixing of air and water.

2.7.5.5 Drift Eliminator

Provide in tower outlet to limit drift loss to not over 0.02 percent of specified water flow. Eliminators shall be constructed of not less than 3/8 inch lumber or polyvinyl chloride (PVC).

2.7.5.6 Fan Cylinder

Each fan shall be mounted in a fan cylinder to elevate the fan discharge air. Total extension height shall not exceed the fan diameter. Fan cylinders shall be constructed of zinc-coated steel, and be compatible with the entire tower construction. Each fan cylinder shall be provided with a zinc-coated steel 12 gauge wire mesh securely mounted to the top of the cylinder in accordance with manufacturer's recommendations.

2.7.5.7 Framework and Equipment Supports

Framework and equipment supports shall be zinc-coated steel. Materials provided for framework, casings and equipment supports shall be compatible.

2.7.5.8 Structural Supports

Structural supports shall be provided in accordance with the recommendations of the manufacturer of the tower unless otherwise indicated.

2.7.5.9 Foundations

Cooling tower foundations shall meet the requirements of the cooling tower manufacturer and be as indicated. Foundation design shall be based on the load conditions and soil bearing value indicated. Foundation calculations shall be submitted with the equipment drawings.

2.7.6 Louvers

Air inlets for each cooling tower shall be provided with individually removable louvers arranged to prevent the escape of water. Louvers shall be zinc-coated steel. Materials provided for casings and louvers shall be compatible; one material shall not produce stains upon the other. Louvers constructed of lumber shall be of a thickness to withstand alternate wetting and drying without cracking or splitting. Air intakes shall be provided with 1 inch zinc-coated steel mesh.

2.7.7 Fans

Fans shall be the adjustable-pitch propeller type, constructed of zinc-coated steel, Type 304 stainless steel, aluminum or an aluminum alloy, or FRP. Propeller type shall have a maximum tip speed of 11,000 fpm. Fan blade assembly shall be both statically and dynamically balanced after assembly of the cooling tower. Fan hub shall be constructed of zinc-coated steel with adequate surface protection against corrosion. Complete fan assembly (fan and mounting) shall be designed to give maximum fan efficiency and long life when handling saturated air at high velocities.

2.7.8 Speed Reducer Gears and Drive Shaft

Speed reducer gears shall be rated in accordance with CTI Std-111. Gear reducers shall be of the spiral or helical, double reduction type. Reducer shall be mounted in accordance with manufacturer's recommendations. Each reducer shall be provided with an oil level cutoff switch interlocked to the fan motor. Each reducer shall be provided with an oil level sight glass, fill, drain, and vent lines located in a readily accessible position. Drive shafts shall be the full floating type with flexible couplings at both ends and have a service factor of 1.0 or greater. Drive shafts shall be of stainless steel, fitted each end with flexible couplings (stainless steel plate type). Each drive shaft shall be provided with a galvanized steel guard, to prevent damage to surrounding equipment in case of shaft failure. Provision shall be made for lubrication of all bearings. Bearings shall be accessible to the extent that each bearing can be lubricated without dismantling fan.

2.7.9 Fan Motor

Each motor shall be a two speed, totally enclosed, insulation Class B, NEMA Design B, continuous-rated, and conforming to NEMA MG 1. Fan motors shall have open dripproof enclosures and be located outside the discharge airstream. Motors shall be mounted according to manufacturer's recommendations. Two-speed motors shall have a single winding with variable torque characteristics.

2.7.10 Stairways and Ladders

Provide stairs, 60-degree ship ladders or straight-rung ladders of standard design, starting at roof level and extending as high as required to gain access to fan decks and water distribution systems. Stairways and ladders shall be hot-dip, zinc-coated steel. Ladders higher than 12 feet shall have a safety cage.

2.7.11 Handrailings

Steel handrailings shall be not less than 42 inches high around the exterior of each working surface that is 12 feet or more above the roof, roof, or other supporting construction. Railings shall be not smaller than 1-1/4 inch zinc-coated steel pipe with standard zinc-coated steel railing. As a minimum, provide handrailing at the entire perimeter of the roof deck of each cell of cooling tower.

2.7.12 Access Doors

Each tower shall be provided with access doors at roof level to provide entry to the interior for service maintenance without removal of the fill. Doors shall be provided with doors on each endwall of each cooling tower cell. Frame and brace access doors to prevent damage when opening and closing. Doors shall be located adjacent to float controls.

2.7.13 Mounting of Induced Draft Cooling Towers:

The cooling tower shall be isolated from the building structure by means of bare stable steel springs providing a minimum of 4 inches of static deflection. Provide seismic restraints. The spring isolators shall be installed between suitably framed grillage and dunnage steel. Mountings shall have vertical limit restraints to limit the elongation of the sprung assembly when the water is removed from the tower. The restrained spring type mounting is to be furnished with spacer blocks to prevent the mounting from compressing during installation. After the tower installation is completely installed and filled with water, the mountings are to be adjusted in accordance with the manufacturer's installation procedures to remove the spacer blocks, and the restraining bolts are to be adjusted to prevent the tower from rising more than 1/8" when the water is removed.

The mountings shall serve as blocking during the erection of the towers and after the tower basins have been filled with water. The contractor shall adjust spring mountings to carry the tower and water load resiliently after the tower has been filled. Seismic restraints shall be installed and

adjusted after spring mountings have been adjusted.

Contractor to provide steel dunnage as recommended by the cooling tower manufacturer. Contractor to provide 4" static deflection spring vibration isolation between dunnage and building steel. Design for 100 mph wind or 30 PSF. Motor starting equipment, piping, valves (except flow control valves), and water treatment shall be provided by the HVAC contractor.

2.7.14 BASIN HEATERS

Each cell shall have an independent electric immersion heater system in the cold water basin to maintain 40EF water at -10EF ambient. Each system shall consist of heating element, aquastat, float switch and circuit breaker/contactor with control transformer.

2.8 WATER TREATMENT SYSTEMS

Water treatment is required, the use of chemical-treatment products containing hexavalent chromium (Cr) is prohibited.

2.8.1 Water Analysis

Conditions of make-up water to be supplied to the condenser and chilled water systems shall be provided by the Contractor as follows:

Date of Sample	[_____]	
Temperature	[_____]	degrees F.
Silica (SiO 2)	[_____]	ppm (mg/1)
Insoluble	[_____]	ppm (mg/1)
Iron and Aluminum Oxides	[_____]	ppm (mg/1)
Calcium (Ca)	[_____]	ppm (mg/1)
Magnesium (Mg)	[_____]	ppm (mg/1)
Sodium and Potassium (Na and K)	[_____]	ppm (mg/1)
Carbonate (HCO 3)	[_____]	ppm (mg/1)
Sulfate (SO 4)	[_____]	ppm (mg/1)
Chloride (Cl)	[_____]	ppm (mg/1)
Nitrate (NO 3)	[_____]	ppm (mg/1)
Turbidity	[_____]	unit
pH	[_____]	
Residual Chlorine	[_____]	ppm (mg/1)
Total Alkalinity	[_____]	epm (meq/1)
Non-Carbonate Hardness	[_____]	epm (meq/1)
Total Hardness	[_____]	epm (meq/1)
Dissolved Solids	[_____]	ppm (mg/1)
Fluorine	[_____]	ppm (mg/1)
Conductivity	[_____]	micrmho/cm

2.8.2 Chilled and Condenser Water

Water to be used in the chilled and condenser water systems shall be treated by the Contractor to maintain the conditions recommended by this specification as well as the recommendations from the manufacturers of the condenser and evaporator coils. Chemicals shall meet all required federal, state, and local environmental regulations for the treatment of evaporator

coils and direct discharge to the sanitary sewer.

2.8.3 Water Treatment Services

The services of a company regularly engaged in the treatment of condenser and chilled water systems shall be used to determine the correct chemicals required, the concentrations required, and the water treatment equipment sizes and flow rates required. The company shall maintain the chemical treatment and provide all chemicals required for the condenser and chilled water systems for a period of 1 year from the date of occupancy. The chemical treatment and services provided over the 1 year period shall meet the requirements of this specification as well as the recommendations from the manufacturers of the condenser and evaporator coils. Acid treatment and proprietary chemicals shall not be used.

2.8.4 Chilled Water System

A shot feeder shall be provided on the chilled water piping as indicated. Size and capacity of feeder shall be based on local requirements and water analysis. The feeder shall be furnished with an air vent, gauge glass, funnel, valves, fittings, and piping.

2.8.5 Condenser Water

The water treatment system shall be capable of automatically feeding chemicals and bleeding the system to prevent corrosion, scale, and biological formations. Automatic chemical feed systems shall automatically feed chemicals into the condenser water based on varying system conditions.

2.8.5.1 Chemical Feed Pump

One pump shall be provided for each chemical feed tank. The chemical feed pumps shall be positive displacement diaphragm type. The flow rate of the pumps shall be adjustable from 0 to 100 percent while in operation. The discharge pressure of pumps shall not be less than 1.5 times the line pressure at the point of connection. The pumps shall be provided with a pressure relief valve and a check valve mounted in the pump discharge.

2.8.5.2 Tanks

Two chemical tanks shall be provided. The tanks shall be constructed of stainless steel with a hinged cover. The tanks shall have sufficient capacity to require recharging only once per 21 days during normal operation. A level indicating device shall be included with each tank. An electric agitator shall be provided for each tank.

2.8.5.3 Injection Assembly

An injection assembly shall be provided at each chemical injection point along the condenser water piping as indicated. The injection assemblies shall be constructed of stainless steel. The discharge of the assemblies shall extend to the centerline of the condenser water piping. Each assembly shall include a shutoff valve and check valve at the point of entrance into the condenser water line.

2.8.5.4 Water Meter

Water meters shall be provided with an electric contacting register and remote accumulative counter. The meter shall be installed within the make-up water line, as indicated.

2.8.5.5 Timers

Timers shall be of the automatic reset, adjustable type, and electrically operated. The timers shall be suitable for a 120 volt current. The timers shall be located within the water treatment control panel.

2.8.5.6 Water Treatment Control Panel

The control panel shall be a NEMA 12 enclosure suitable for surface mounting. The panel shall be constructed of stainless steel with a hinged door and lock. The panel shall contain a laminated plastic nameplate identifying each of the following functions:

(1) Main power switch and indicating light
(2) MAN-OFF-AUTO selector switch
(3) Indicating lamp for bleed-off valve
(4) Indicating lamp for each chemical feed pump
(5) Set point reading for each timer

2.8.5.7 Chemical Piping

The piping and fittings shall be constructed of stainless steel suitable for the water treatment chemicals.

2.8.5.8 Sequence of Operation

The chemicals shall be added based upon sensing the make-up water flow rate and activating appropriate timers. A separate timer shall be provided for each chemical. The blow down shall be controlled based upon the make-up water flow rate and a separate timer. The injection of the chemical required for biological control shall be controlled by a timer which can be manually set for proper chemical feed. All timer set points, blow down rates, and chemical pump flow rates shall be determined and set by the water treatment company.

2.8.5.9 Test Kits

One test kit of each type required to determine the water quality as outlined within the operation and maintenance manuals shall be provided.

2.8.5.10 Bleed Line

A bleed line with a flow valve of the needle-valve type sized for the flow requirement or fixed orifice shall be provided in the pump return to the tower. The bleed line shall be extended to the nearest drain for continuous discharge.

2.9 PIPING COMPONENTS

2.9.1 Water Piping and Fittings

2.9.1.1 Steel Pipe

Steel pipe shall conform to ASTM A 53, Schedule 40, Type E or S, Grades A or B. Type F pipe shall not be used.

2.9.1.2 Steel Pipe Joints and Fittings

Joints and fittings shall be welded, flanged, or threaded as indicated. If not otherwise indicated, piping 1 inch and smaller shall be threaded; piping larger than 1 inch and smaller than 3 inches shall be either threaded, or welded; and piping 3 inches and larger shall be grooved, welded, or flanged. The manufacturer of each fitting shall be permanently identified on the body of the fitting in accordance with MSS SP-25.

a. Welded Joints and Fittings: Welded fittings shall conform to ASTM A 234/A234M, and identified with the appropriate grade and marking symbol. Butt-welding fittings shall conform to ASME B16.9. Socket-welding and threaded fittings shall conform to ASME B16.11.

b. Flanged Joints and Fittings: Flanges shall conform to ASTM A 181/A181M and ASME B16.5 Class 150. Gaskets shall be nonasbestos compressed material in accordance with ASME B16.21, 1/16 inch thickness, full face or self-centering flat ring type. This gaskets shall contain aramid fibers bonded with styrene butadeine rubber (SBR) or nitrile butadeine rubber (NBR). Bolts, nuts, and bolt patterns shall conform to ASME B16.5. Bolts shall be high or intermediate strength material conforming to ASTM A 193/A193M.

c. Threaded Joints and Fittings: Threads shall conform to ASME B1.20.1. Pipe nipples shall conform to ASTM A 733, type and material to match adjacent piping. Unions shall conform to ASME B16.39, type as required to match adjacent piping.

d. Dielectric Unions and Flanges: Dielectric unions shall have the tensile strength and dimensional requirements specified. Unions shall have metal connections on both ends threaded to match adjacent piping. Metal parts of dielectric unions shall be separated with a nylon insulator to prevent current flow between dissimilar metals. Unions shall be suitable for the required operating pressures and temperatures. Dielectric flanges shall provide the same pressure ratings as standard flanges and provide complete electrical isolation.

2.9.1.3 Copper Tube

Copper tubing for water service shall conform to ASTM B 88,ASTM B 88M, Type K or L.

2.9.1.4 Copper Tube Joints and Fittings

Wrought copper and bronze solder-joint pressure fittings shall conform to ASME B16.22 and ASTM B 75. Cast copper alloy solder-joint pressure fittings shall conform to ASME B16.18. Cast copper alloy fittings for flared copper tube shall conform to ASME B16.26 and ASTM B 62. Brass or bronze adapters for brazed tubing may be used for connecting tubing to flanges and to threaded ends of valves and equipment. Extracted brazed tee joints produced with an acceptable tool and installed as recommended by the manufacturer may be used.

2.9.2 Water Piping Valves and Accessories

Valves shall be rated for Class 125 and shall be suitable for operating temperature of 250 degrees F. Valves shall be suitable for the working pressure of the pipe in which installed. Valves shall meet the material, fabrication and operating requirements of ASME B31.1. Chain operators shall be provided for valves located 10 feet or higher above the floor. Valves in sizes larger than 1 inch and used on steel pipe systems, may be provided with rigid grooved mechanical joint ends. Such grooved end valves shall be subject to the same requirements as rigid grooved mechanical joints and fittings and, shall be provided by the same manufacturer as the grooved pipe joint and fitting system.

2.9.2.1 Gate Valves

Gate valves 2-1/2 inches and smaller shall conform to MSS SP-80 and shall be bronze with rising stem and threaded, soldered, or flanged ends. Gate valves 3 inches and larger shall conform to MSS SP-70, Type I, II, Class 125, Design OF and shall be cast iron with bronze trim, outside screw and yoke, and flanged or threaded ends.

2.9.2.2 Globe and Angle Valves

Globe and angle valves 2-1/2 inches and smaller shall conform to MSS SP-80 and shall be bronze with threaded, soldered, or flanged ends. Globe and angle valves 3 inches and larger shall conform to MSS SP-85 and shall be cast iron with bronze trim and flanged or threaded ends.

2.9.2.3 Check Valves

Check valves 2-1/2 inches and smaller shall conform to MSS SP-80 and shall be bronze with threaded, soldered, or flanged ends. Check valves 3 inches and larger shall conform to MSS SP-71, Type I, II, III, or IV, Class 125 or 150 and shall be cast iron with bronze trim and flanged or threaded ends.

2.9.2.4 Butterfly Valves

Butterfly valves shall be in accordance with MSS SP-67, Type 1 and shall be 2 flange or lug wafer type, and shall be bubble tight at [150] [250] psig. Valve bodies shall be cast iron, malleable iron, or steel. Valves smaller than 8 inches shall have throttling handles with a minimum of seven locking positions. Valves 8 inches and larger shall have totally enclosed manual gear operators with adjustable balance return stops and position indicators. Valves in insulated lines shall have extended neck to accommodate insulation thickness.

2.9.2.5 Plug Valves

Plug valves 2 inches and larger shall conform to MSS SP-78, have flanged or threaded ends, and have cast iron bodies with bronze trim. Valves 2 inches and smaller shall be bronze with NPT connections for black steel pipe and brazed connections for copper tubing. Valves shall be lubricated, non-lubricated, or tetrafluoroethylene resin-coated type. Valves shall be resilient, double seated, trunnion mounted with tapered lift plug capable of 2-way shutoff. Valves shall operate from fully open to fully closed by rotation of the handwheel to lift and turn the plug. Valves shall a weatherproof operators with mechanical position indicators. Valves 8 inches or larger shall be provided with manual gear operators with position indicators.

2.9.2.6 Ball Valves

Ball valves 1/2 inch and larger shall conform to MSS SP-72 or MSS SP-110 and shall be ductile iron or bronze with threaded, soldered, or flanged ends. Valves 8 inches or larger shall be provided with manual gear operators with position indicators.

2.9.2.7 Calibrated Balancing Valves

Each valve shall be calibrated so that flow can be determined when the temperature and pressure differential across valve is known. Valves shall have an integral pointer which registers the degree of valve opening. Each valve shall be constructed with internal seals to prevent leakage and shall be supplied with preformed insulation. Valves Cv rating shall be as indicated. Valve bodies shall be provided with tapped openings and pipe extensions with positive shutoff valves outside of pipe insulation. The pipe extensions shall be provided with quick connecting hose fittings for a portable meter to measure the pressure differential. One portable differential meter, suitable for the operating pressure specified, shall be provided. The meter shall be complete with hoses, vent, integral metering connections, and carrying case as recommended by the valve manufacturer. In lieu of the balancing valve with integral metering connections, a ball valve or plug valve with a separately installed orifice plate or venturi tube may be used for balancing.

Balancing Valves:

1. Types: Wherever "Balancing Valves", "Balancing Cocks", or similar words are used on the Contract Drawings, provide ball valves, resilient face eccentric plug valves, multi-purpose plug valves or butterfly valves for balancing purposes.

2. Butterfly Valves: Provide butterfly valves conforming to MSS SP 67 with single flange or lug type end connections which will anchor the valve body in place when either one or the adjacent flanged connection is unbolted.

3. Ball Valves: Provide ball valves conforming to MSS SP 72.

a) Provide one piece bodies on sizes 1-inch and smaller.

b) Provide top entry or split body type on sizes 1-1/2 inch and larger.

4. Locking Device: On each balancing valve size 1-1/2-inch and larger provide a locking device, with indicator, to secure the valve in the balanced position. If standard with the manufacturer, the locking device may be arranged so that the valve may be closed and then returned to its original balanced position.

5. Stems and Hand Operators: Design valves with stems and hand operators of sufficient length to project outside of 2-inch thick insulation. Indicators and locking devices shall be exposed.

6. Balancing Valves: Furnish and install in the return line from each piece of hydronic equipment (terminal box heating coils, cabinet heaters, unit heaters, fin tube, cooling coils, cabinet convectors, fan coil units, etc.) and at each branch takeoff from a vertical riser on each floor, a one piece, non-ferrous union type bronze/brass flow measuring and balancing/shutoff valve combination. The flow element shall be a low loss/high signal Venturi type (+ 2% accuracy) of one to ten rangeability, equipped with dual pete's plug test ports for temperature, pressure and flow measurement. Balancing/shut off valves shall be ball type with large diameter plated ball, teflon seats, blow out proof stem with teflon packing and packing nut, full size handle with grip and memory stop. Entire assembly rated to 400 WOG and tested to 100# after assembly. When used on chilled water systems, provide extensions on all accessories as required.

   Furnish a portable meter complete with all accessories for measuring flows.

   Furnish to the Owner, 6 sets of thermometers and pressure gauges.

2.9.2.8 Automatic Flow Control Valves

Valves shall automatically maintain a constant flow as indicated. Valves shall modulate by sensing the pressure differential across the valve body. Valves shall be selected for the flow required and provided with a permanent nameplate or tag carrying a permanent record of the factory-determined flow rate and flow control pressure levels. Valves shall control the flow within 5 percent of the tag rating. Valve materials shall be the same as specified for the ball or plug valves. Valve Cv rating shall be as indicated. Valve operators shall be the electric type as indicated. Valves shall be capable of positive shutoff against the system pump head, valve bodies shall be provided with tapped openings and pipe extensions with shutoff valves outside of pipe insulation. The pipe extensions shall be provided with quick connecting hose fittings and differential meter, suitable for the operating pressure specified. The meter shall be complete with hoses, vent, integral metering connections, and carrying case as recommended by the valve manufacturer.

2.9.2.9 Air Vents

Manual air vents shall be brass or bronze valves or cocks suitable for 125 psig service, and furnished with threaded plugs or caps. Automatic air vents shall be float type, cast iron, stainless steel, or forged steel construction, suitable for 125 psig service.

2.9.2.10 Strainers

Strainers shall be in accordance with ASTM F 1199, except as modified herein. Strainer shall be the cleanable, basket or "Y" type, the same size as the pipeline. The strainer bodies shall be fabricated of cast iron with bottoms drilled, and tapped. The bodies shall have arrows clearly cast on the sides indicating the direction of flow. Each strainer shall be equipped with removable cover and sediment screen. The screen shall be made of minimum 22 gauge brass sheet, with small perforations numbering not less than 400 per square inch to provide a net free area through the basket of at least 3.30 times that of the entering pipe. The flow shall be into the screen and out through the perforations.

2.9.2.11 Pump Discharge Valves

Pump discharge valves shall be installed where indicated and shall perform the functions of a nonslam check valve, a manual balancing valve, and a shutoff. Valves shall be of cast iron or ductile iron construction with bronze and/or stainless steel accessories. Valves shall have an integral pointer which registers the degree of valve opening. Flow through the valve shall be manually adjustable from bubble tight shutoff to full flow. Valves smaller than 2 inches shall have NPT connections. Valves 2 inches and larger shall have flanged or grooved end connections. The valve design shall allow the back seat for the stem to be replaced in the field under full line pressure. Valve Cv rating shall be as indicated.

2.9.2.12 Flexible Pipe Connectors

Flexible pipe connectors shall be designed for 125 psig or 150 psig service as appropriate for the static head plus the system head, and 230 degrees F, for grooved end flexible connectors. The flexible section shall be constructed of rubber, tetrafluoroethylene resin, or corrosion-resisting steel, bronze, monel, or galvanized steel. The flexible section shall be suitable for intended service with end connections to match adjacent piping. Flanged assemblies shall be equipped with limit bolts to restrict maximum travel to the manufacturer's standard limits. Unless otherwise indicated, the length of the flexible connectors shall be as recommended by the manufacturer for the service intended. Internal sleeves or liners, compatible with circulating medium, shall be provided when recommended by the manufacturer. Covers to protect the bellows shall be provided where indicated. Privide flexible pipe connections at connections to all equipment, coils, pumps, air handling units, etc.

2.9.2.13 Pressure Gauges

Gauges shall conform to ASME B40.1 and shall be provided with throttling type needle valve or a pulsation dampener and shut-off valve. Gauge shall

be a minimum of 3-1/2 inches in diameter with a range from 0 psig to approximately 1.5 times the maximum system working pressure.

2.9.2.14 Thermometers

Thermometers shall have brass, malleable iron, or aluminum alloy case and frame, clear protective face, permanently stabilized glass tube with indicating-fluid column, white face, black numbers, and a 9 inch scale. Thermometers shall have rigid stems with straight, angular, or inclined pattern.

2.9.2.15 Pipe Nipples

Pipe nipples shall be in accordance with ASTM A 733 and be of material to match adjacent piping.

2.9.2.16 Pipe Unions

Pipe unions shall be in accordance with ASME B16.39 and be of material to match adjacent piping.

2.9.2.17 Solder

Solder for water piping shall be in accordance with ASTM B 32, alloy grade 50B. Solder flux shall be liquid or paste form, non-corrosive and conform to ASTM B 813.

2.9.3 Expansion Joints

2.9.3.1 Slip-Tube Joints

Expansion joints shall provide for either single or double slip of the connected pipes, as required or indicated, and for not less than the traverse indicated. The joints shall be designed for working temperature and pressure suitable for the application, but not less than 150 psig, and shall be in accordance with applicable requirements of EJMA-01 and ASME B31.1. End connections shall be flanged or beveled for welding as indicated. Joints shall be provided with an anchor base where required or indicated. Where adjoining pipe is carbon steel, the sliding slip shall be seamless steel plated with a minimum of 5 mils of hard chrome in accordance with ASTM B 650. All joint components shall be suitable for the intended service. Initial settings shall be made in accordance with the manufacturer's recommendations to compensate for ambient temperature at time of installation. Pipe alignment guides shall be installed as recommended by the joint manufacturer. Pipe alignment guides shall in no case be more than 5 feet from expansion joints except for pipe 4 inches or smaller. Pipe alignment guides on pipe 4 inches or smaller shall be installed not more than 2 feet from expansion joints. Service outlets shall be provided where indicated.

2.9.3.2 Flexible Ball Joints

Flexible ball joints shall be constructed of alloys as appropriate for the service intended. Where so indicated, the ball joint shall be designed for

packing injection under full line pressure to contain leakage. The joint ends shall be threaded to 2 inches only, grooved, flanged, or beveled for welding as indicated or required and shall be capable of absorbing a minimum of 15 degree angular flex and 360 degree rotation. Ball and sockets shall be suitable for the intended service. The exterior spherical surface of carbon steel balls shall be plated with minimum 5 mils of hard chrome in accordance with EJMA-01 and ASME B31.1 where applicable. Where required, flanges shall conform to ASME B16.5.

2.9.3.3 Bellows Type Joints

Bellows type joints shall be flexible, guided expansion joints. The expansion element shall be stabilized corrosion resistant steel. Bellows type expansion joints shall conform to the applicable requirements of EJMA-01 and ASME B31.1 with internal sleeves. Guiding of piping on both sides of expansion joint shall be in accordance with the published recommendations of the manufacturer of the expansion joint. The joints shall be designed for the working temperature and pressure suitable for the application but not less than 150 psig.

2.9.4 Refrigerant Piping and Fittings

Refrigerant piping, valves, fittings, and accessories shall conform to the requirements of ASHRAE 15 and ASME B31.5, except as specified.

2.9.4.1 Steel Pipe

Steel pipe for refrigerant service shall conform to ASTM A 53, Schedule 40, Type E or S, Grade B. Type F pipe shall not be used.

2.9.4.2 Steel Pipe Joints and Fittings

Joints and fittings shall be steel butt-welding, socket-welding, or malleable iron threaded type. Pipe shall be welded except that joints on lines 2 inches and smaller may be threaded. Threads shall be tapered type conforming to ASME B1.20.1. The malleable iron threaded type fitting shall be of a weight corresponding to adjacent pipe. Flanges and flange faces of fittings shall be tongue-and-groove type with gaskets suitable for the refrigerant used; size 1 inch and smaller shall be oval, two-bolt type; size above 1 inch, up to and including 4 inches, shall be square four-bolt type; and sizes over 4 inches shall be round.

2.9.4.3 Steel Tubing

Steel tubing for refrigeration service shall be in accordance with ASTM A 334/A334M, Grade 1. Tubing with a nominal diameter of 3/8 inch or 1/2 inch shall have a wall thickness of 0.049 inches. Tubing with a nominal diameter of 3/4 inch through 2 inches shall have a wall thickness of 0.065 inches. Tubing with a nominal diameter of 2-1/2 inches through 4 inches shall have a wall thickness of 0.095 inches. Steel tubing shall be cold-rolled, electric-forged, welded-steel. One end of the tubing shall be provided with a socket. Steel tubing shall be cleaned, dehydrated, and capped.

2.9.4.4 Steel Tubing Joints and Fittings

Joints and fittings shall be socket type provided by the steel tubing manufacturer.

2.9.4.5 Copper Tubing

Copper tubing shall conform to ASTM B 280 annealed or hard drawn as required. Copper tubing shall be soft annealed where bending is required and hard drawn where no bending is required. Soft annealed copper tubing shall not be used in sizes larger than 1-3/8 inches. Joints shall be brazed except that joints on lines 7/8 inchand smaller may be flared.

2.9.4.6 Copper Tube Joints and Fittings

Copper tube joints and fittings shall be flare joint type with short-shank flare, or solder-joint pressure type. Joints and fittings for brazed joint shall be wrought-copper or forged-brass sweat fittings. Cast sweat-type joints and fittings shall not be allowed for brazed joints.

2.9.5 Refrigerant Piping, Valves, and Accessories

Valves shall be pressure and temperature rates for contained refrigerant service and shall comply with ASME B31.5. Metals of constructions shall be ferrous or copper based. Atmosphere exposed valve stems shall be stainless steel or corrosion resistant metal plated carbon steel. Valve body connections shall not be used, except in pilot pressure or gauge lines where maintenance disassembly is required and welded flanges cannot be used. Valves shall be suitable for or fitted with extended copper ends for brazing in-place without disassembly. Ferrous body valves shall be fitted with factory fabricated and brazed copper transitions. To minimize system pressure drops, where practicable, globe valves shall be angle body type, and straight line valves shall be full port ball type. Control valve inlets shall be fitted with integral or adapted strainer or filter where recommended or required by the manufacturer. Valves shall be cleaned and sealed moisture-tight.

2.9.5.1 Refrigerant-Stop Valves

Valves, in sizes through 5/8 inch, shall be handwheel operated, straight or angle, packless diaphragm globe type with back-seating stem, brazed ends, except where SAE flare or retained seal cap connections are required. In sizes over 5/8 inch, valves shall be globe or angle type, wrench operated with ground-finish stems, or ball valves, packed especially for refrigerant service, back seated, and provided with seal caps. Refrigerant isolation and shut-off valves shall have retained or captive spindles and facilities for tightening or replacement of the gland packing under line pressure as applicable. Stop valves hall have back-seating plated steel stem, bolted bonnet in sizes 1-1/8 inches OD and larger, integral or flanged transition brazed socket. Valves in sizes through 2-1/2 inches shall be end-entry body assembly, full-port, floating ball type, with equalizing orifice fitted chrome plated ball, seats and seals of tetrafluoroethylene, chrome plated or stainless steel stem, and seal cap. In sizes 4 inch IPS and larger, and in smaller sizes where carbon steel

piping is used, valve bodies shall be tongue and groove flanged and complete with mating flange, gaskets and bolting for socket or butt-welded connection. Purge, charge and receiver valves shall be of manufacturer's standard configuration.

2.9.5.2 Check Valves

Valve shall be designed for service application, spring-loaded type where required, with resilient seat and with flanged body in sizes 1/2 inch and larger. Valve shall provide positive shutoff at 1-1/2 psi differential pressure.

2.9.5.3 Liquid Solenoid Valves

Valves shall comply with ARI 760 and be suitable for continuous duty with applied voltages 15 percent under and 5 percent over nominal rated voltage at maximum and minimum encountered pressure and temperature service conditions. Valves shall be direct-acting or pilot-operating type, packless, except that packed stem, seal capped, manual lifting provisions shall be furnished. Solenoid coils shall be moisture-proof, UL approved, totally encapsulated or encapsulated and metal jacketed as required. Valves shall have safe working pressure of 400 psi and a maximum operating pressure differential of at least 200 psi at 85 percent rated voltage. Valves shall have an operating pressure differential suitable for the refrigerant used.

2.9.5.4 Expansion Valves

Expansion valves shall conform to requirements of ARI 750. Valve shall be of the diaphragm and spring type with internal or external equalizers, and bulb and capillary tubing. Valve shall be provided with an external superheat adjustment along with a seal cap. Internal equalizers may be utilized where flowing refrigerant pressure drop between outlet of the valve and inlet to the evaporator coil is negligible and pressure drop across the evaporator is less than the pressure difference corresponding to 2 degrees F of saturated suction temperature at evaporator conditions. Bulb charge shall be determined by the manufacturer for the application and such that liquid will remain in the bulb at all operating conditions. Gas limited liquid charged valves and other valve devices for limiting evaporator pressure shall not be used without a distributor or discharge tube or effective means to prevent loss of control when bulb becomes warmer than valve body. Pilot-operated valves shall have a characterized plug to provide required modulating control. A de-energized solenoid valve may be used in the pilot line to close the main valve in lieu of a solenoid valve in the main liquid line. An isolatable pressure gauge shall be provided in the pilot line, at the main valve. Automatic pressure reducing or constant pressure regulating expansion valves may be used only where indicted or for constant evaporator loads.

2.9.5.5 Safety Relief Valves

Valve shall be two-way type. Single type valves shall be used only where indicated. Valve shall bear the ASME code symbol. Valve capacity shall be certified by the National Board of Boiler and Pressure Vessel Inspectors.

Valve shall be of an automatically reseating design after activation.

2.9.5.6 Evaporator Pressure Regulators, Direct-Acting

Valve shall include a diaphragm/spring assembly, external pressure adjustment with seal cap, and pressure gauge port. Valve shall maintain a constant inlet pressure by balancing inlet pressure on diaphragm against an adjustable spring load. Pressure drop at system design load shall not exceed the pressure difference corresponding to a 2 degrees F change in saturated refrigerant temperature at evaporator operating suction temperature. Spring shall be selected for indicated maximum allowable suction pressure range.

2.9.5.7 Refrigerant Access Valves

Refrigerant access valves and hose connections shall be in accordance with ARI ANSI/ARI 720.

2.9.5.8 Filter Driers

Driers shall conform to ARI ANSI/ARI 710. Sizes 5/8 inch and larger shall be the full flow, replaceable core type. Sizes 1/2 inch and smaller shall be the sealed type. Cores shall be of suitable desiccant that will not plug, cake, dust, channel, or break down, and shall remove water, acid, and foreign material from the refrigerant. Filter driers shall be constructed so that none of the desiccant will pass into the refrigerant lines. Minimum bursting pressure shall be 1,500 psi.

2.9.5.9 Sight Glass and Liquid Level Indicator

a. Assembly and Components: Assembly shall be pressure- and temperature-rated and constructed of materials suitable for the service. Glass shall be borosilicate type. Ferrous components subject to condensation shall be electro-galvanized.

b. Gauge Glass: Gauge glass shall include top and bottom isolation valves fitted with automatic checks, and packing followers; red-line or green-line gauge glass; elastomer or polymer packing to suit the service; and gauge glass guard.

c. Bull's-Eye and Inline Sight Glass Reflex Lens: Bull's-eye and inline sight glass reflex lens shall be provided for dead-end liquid service. For pipe line mounting, two plain lenses in one body suitable for backlighted viewing shall be provided.

d. Moisture Indicator: Indicator shall be a self-reversible action, moisture reactive, color changing media. Indicator shall be furnished with full-color-printing tag containing color, moisture and temperature criteria. Unless otherwise indicated, the moisture indicator shall be an integral part of each corresponding sight glass.

2.9.5.10 Vibration Dampeners

Dampeners shall be of the all-metallic bellows and woven-wire type.

2.9.5.11 Flexible Pipe Connectors

Connector shall be pressure and temperature rated for the service in accordance with ASHRAE 15 and ASME B31.5. Connector shall be a composite of interior corrugated phosphor bronze or Type 300 Series stainless steel, as required for fluid service, with exterior reinforcement of bronze, stainless steel or monel wire braid. Assembly shall be constructed with a safety factor of not less than 4 at 300 degrees F. Unless otherwise indicated, the length of a flexible connector shall be as recommended by the manufacturer for the service intended.

2.9.5.12 Strainers

Strainers used in refrigerant service shall have brass or cast iron body, Y-or angle-pattern, cleanable, not less than 60-mesh noncorroding screen of an area to provide net free area not less than ten times the pipe diameter with pressure rating compatible with the refrigerant service. Screens shall be stainless steel or monel and reinforced spring-loaded where necessary for bypass-proof construction.

2.9.5.13 Brazing Materials

Brazing materials for refrigerant piping shall be in accordance with AWS A5.8, Classification BCuP-5.

2.9.6 Escutcheons

Escutcheons shall be chromium-plated iron or chromium-plated brass, either one piece or split pattern, held in place by internal spring tension or set screws.

2.9.7 Pipe Hangers, Inserts, and Supports

Pipe hangers, inserts, and supports shall conform to MSS SP-58 and MSS SP-69.

2.10 FABRICATION

2.10.1 Factory Coating

Unless otherwise specified, equipment and component items, when fabricated from ferrous metal, shall be factory finished with the manufacturer's standard finish, except that items located outside of buildings shall have weather resistant finishes that will withstand 500 hours exposure to the salt spray test specified in ASTM B 117 using a 5 percent sodium chloride solution. Immediately after completion of the test, the specimen shall show no signs of blistering, wrinkling, cracking, or loss of adhesion and no sign of rust creepage beyond 1/8 inch on either side of the scratch mark. Cut edges of galvanized surfaces where hot-dip galvanized sheet steel is used shall be coated with a zinc-rich coating conforming to ASTM D 520, Type I.

2.10.2 Field Painting

Painting required for surfaces not otherwise specified, and finish painting of items only primed at the factory are specified in Section 09900 PAINTING, GENERAL.

2.10.2.1 Color Coding

Color coding for piping identification is specified in Section 09900 PAINTING, GENERAL.

2.10.2.2 Color Coding Scheme

A color coding scheme for locating hidden piping shall be in accordance with Section 15400 PLUMBING, GENERAL PURPOSE.

2.11 FACTORY TESTS

2.11.1 Chiller Performance Test

The Contractor and proposed chiller manufacturer shall be responsible for performing the chiller factory test to validate the specified full load capacity, full load EER, and APLV in accordance with ARI ANSI/ARI 550 except as indicated. The chiller factory test shall be performed in the presence of a Government representative. The Contractor and chiller manufacturer shall provide to the Government a certified chiller factory test report in accordance with ARI ANSI/ARI 550 to confirm that the chiller performs as specified. All tests shall be conducted in an ARI certified test facility in conformance with ARI ANSI/ARI 550 procedures and tolerances, except as indicated. At a minimum, chiller capacity shall be validated to meet the scheduled requirements indicated on the drawings. Tolerance or deviation shall be in strict accordance with ARI ANSI/ARI 550 .Stable operation at minimum load of 10 percent of total capacity shall be demonstrated during the factory test.

a. Temperature adjustments shall adhere to ARI ANSI/ARI 550 to adjust from the design fouling factor to the clean tube condition. Test temperature adjustments shall be verified prior to testing by the manufacturer. There shall be no exceptions to conducting the test with clean tubes with the temperature adjustments per section A7.3 of ARI ANSI/ARI 550. The manufacturer shall clean the tubes, if necessary, prior to testing to obtain a test fouling factor of 0.00025.

b. The factory test instrumentation shall be per ARI ANSI/ARI 550 and the calibration shall be traceable to the National Institute of Standards and Technology.

c. A certified test report of all data shall be forwarded to the Government for approval prior to project acceptance. All calibration curves and information sheets for all instrumentation shall be provided.

d. If the equipment fails to perform within allowable tolerances, the manufacturer shall be allowed to make necessary revisions to his

equipment and retest as required. The manufacturer shall assume all expenses incurred by the Government to witness the retest.

2.11.2 Chiller Sound Test

All centrifugal chillers shall be sound tested at the factory prior to shipment to confirm the sound pressure level specified below. All tests and data shall be conducted and measured in strict accordance with ARI 575. The centrifugal chiller sound pressure level, in decibels (dB), with a reference pressure of 20 micropascals, shall not exceed 90 dB, A weighted, at full load. All ratings shall be in accordance with ARI 575. No reduction of entering condenser water temperature or raising of leaving chilled water temperature shall be allowed. A minimum of 75 percent of the sound data points shall be taken along the length of the machine, and established as the minimum percentage of total possible points used to determine sound levels. In the event that the chiller does not meet the dBA sound pressure level, the manufacturer shall, at his expense, provide sufficient attenuation to the machine to meet the specified value. This attenuation shall be applied in such a manner that it does not hinder the operation or routine maintenance procedures of the chiller. The attenuation material, adhesives, coatings, and other accessories shall have surface burning characteristics as determined by ASTM E 84.

2.12 SUPPLEMENTAL COMPONENTS/SERVICES

2.12.1 Drain and Makeup Water Piping

Piping and backflow preventers shall comply with the requirements of Section 15400 PLUMBING, GENERAL PURPOSE. Drains shall be connected to sanitary sewer system shall be connected by means of an indirect waste.

2.12.2 Steam Piping and Accessories

Steam piping and accessories shall be provided and installed in accordance with Section 15562 HEATING AND UTILITIES SYSTEMS, CENTRAL STEAM.

PART 3 EXECUTION

3.1 INSTALLATION

All work shall be performed in accordance with the manufacturer's published diagrams, recommendations, and equipment warranty requirements. Where equipment is specified to conform to the requirements of ASME BPV VIII Div 1 and ASME BPV IX, the design, fabrication, and installation of the system shall conform to ASME BPV VIII Div 1 and ASME BPV IX.

3.1.1 Refrigeration System

3.1.1.1 Equipment

Necessary supports shall be provided for all equipment, appurtenances, and pipe as required, including frames or supports for compressors, pumps, cooling towers, condensers, liquid coolers, and similar items. Compressors shall be isolated from the building structure. If mechanical vibration

isolators are not provided, vibration absorbing foundations shall be provided. Each foundation shall include isolation units consisting of machine and floor or foundation fastenings, together with intermediate isolation material. Other floor-mounted equipment shall be set on not less than a 6 inch concrete pad doweled in place. Concrete foundations for floor mounted pumps shall have a mass equivalent to three times the weight of the components, pump, base plate, and motor to be supported. In lieu of concrete pad foundation, concrete pedestal block with isolators placed between the pedestal block and the floor may be provided. Concrete pedestal block shall be of mass not less than three times the combined pump, motor, and base weights. Isolators shall be selected and sized based on load-bearing requirements and the lowest frequency of vibration to be isolated. Isolators shall limit vibration to 5 percent at lowest equipment rpm. Lines connected to pumps mounted on pedestal blocks shall be provided with flexible connectors. Foundation drawings, bolt-setting information, and foundation bolts shall be furnished prior to concrete foundation construction for all equipment indicated or required to have concrete foundations. Equipment shall be properly leveled, aligned, and secured in place in accordance with manufacturer's instructions.

3.1.1.2 Refrigerant Charging

a. Initial Charge: Upon completion of all the refrigerant pipe tests, the vacuum on the system shall be broken by adding the required charge of dry refrigerant for which the system is designed, in accordance with the manufacturer's recommendations. Contractor shall provide the complete charge of refrigerant in accordance with manufacturer's recommendations. Upon satisfactory completion of the system performance tests, any refrigerant that has been lost from the system shall be replaced. After the system is fully operational, service valve seal caps and blanks over gauge points shall be installed and tightened.

b. Refrigerant Leakage: If a refrigerant leak is discovered after the system has been charged, the leaking portion of the system shall immediately be isolated from the remainder of the system and the refrigerant shall be pumped into the system receiver or other suitable container. The refrigerant shall not be discharged into the atmosphere.

c. Contractor's Responsibility: The Contractor shall, at all times during the installation and testing of the refrigeration system, take steps to prevent the release of refrigerants into the atmosphere. The steps shall include, but not be limited to, procedures which will minimize the release of refrigerants to the atmosphere and the use of refrigerant recovery devices to remove refrigerant from the system and store the refrigerant for reuse or reclaim. At no time shall more than 3 oz. of refrigerant be released to the atmosphere in any one occurrence. Any system leaks within the first year shall be repaired in accordance with the specified requirements including material, labor, and refrigerant if the leak is the result of defective equipment, material, or installation.

3.1.1.3 Oil Charging

Except for factory sealed units, two complete charges of lubricating oil for each compressor crankcase shall be furnished. One charge shall be used during the performance testing period, and upon the satisfactory completion of the tests, the oil shall be drained and replaced with the second charge.

3.1.1.4 Automatic Controls

Automatic controls for the central refrigeration system specified in paragraph REFRIGERATION SYSTEM shall be provided with the central refrigeration equipment. These controls shall operate automatically to balance the equipment capacity with the load on the air conditioning system, and shall be fully coordinated with and integrated into the temperature control system specified in Section 15951 DIRECT DIGITAL CONTROL FOR HVAC.

3.1.2 General Piping Installation

3.1.2.1 Brazed Joints

Before brazing copper joints, both the outside of the tube and the inside of the fitting shall be cleaned with a wire fitting brush until the entire joint surface is bright and clean. Brazing flux shall not be used. Surplus brazing material shall be removed at all joints. Steel tubing joints shall be made in accordance with the manufacturer's recommendations. Joints in steel tubing shall be painted with the same material as the baked-on coating within 8 hours after joints are made. Tubing shall be protected against oxidation during brazing by continuous purging of the inside of the piping using nitrogen. All piping shall be supported prior to brazing and shall not be sprung or forced.

3.1.2.2 Threaded Joints

Threaded joints shall be made with tapered threads and made tight with PTFE tape complying with ASTM D 3308 or equivalent thread-joint compound applied to the male threads only. Not more than three threads shall show after the joint is made.

3.1.2.3 Welded Joints

Structural members shall be welded in accordance with Section 05090 WELDING, STRUCTURAL. Welding and nondestructive testing procedures are specified in Section 05093 WELDING PRESSURE PIPING. Changes in direction of piping shall be made with welded fittings only; mitering or notching pipe or other similar construction to form elbows or tees will not be permitted. Branch connections shall be made with welding tees or forged welding branch outlets. Steel pipe shall be thoroughly cleaned of all scale and foreign matter before the piping is assembled. During welding the pipe and fittings shall be filled with an inert gas, such as nitrogen, to prevent the formation of scale. Beveling, alignment, heat treatment, and inspection of weld shall conform to ASME B31.1. Weld defects shall be removed and rewelded at no additional cost to the Government. Electrodes shall be stored and dried in accordance with AWS D1.1 or as recommended by

the manufacturer. Electrodes that have been wetted or that have lost any of their coating shall not be used.

3.1.2.4 Flanged Joints

Flanged joints shall be faced true, provided with gaskets suitable for use with refrigerants and made square and tight. When steel refrigerant piping is used, union or flange joints shall be provided in each line immediately preceding the connection to each piece of equipment requiring maintenance, such as compressors, coils, chillers, control valves, and other similar items.

3.1.2.5 Flared Connections

When flared connections are used, a suitable lubricant shall be used between the back of the flare and the nut in order to avoid tearing the flare while tightening the nut.

3.1.2.6 Thermometers

Thermometers shall be located specifically on, but not limited to the following: condenser water lines entering and leaving the condenser; the sensing element of each automatic temperature control device where a thermometer is not an integral part thereof; the liquid line leaving receiver; and the suction line at each evaporator or liquid cooler.

3.1.2.7 Supports

a. General: All refrigerant pipe supports shall be in accordance with ASME B31.5. Hangers used to support piping 2 inches and larger shall be fabricated to permit adequate adjustment after erection while still supporting the load. Pipe guides and anchors shall be installed to keep pipes in accurate alignment, to direct the expansion movement, and to prevent buckling, swaying, and undue strain. Piping subjected to vertical movement, when operating temperatures exceed ambient temperatures, shall be supported by variable spring hangers and supports or by constant support hangers.

b. Seismic Requirements: All piping and attached valves and equipment shall be supported and braced to resist seismic loads as specified under Section 13080 SEISMIC PROTECTION FOR MECHANICAL, ELECTRICAL EQUIPMENT as shown on the drawings. Structural steel required for reinforcement to properly support piping, headers, and equipment but not shown shall be provided under this section. Material used for support shall be as specified under Section 05120 STRUCTURAL STEEL.

c. Structural Attachments: Structural steel brackets required to support piping, headers, and equipment, but not shown, shall be provided under this section. Material and installation shall be as specified under Section 05120 STRUCTURAL STEEL.

3.1.2.8 Pipe Hangers, Inserts, and Supports

Pipe hangers, inserts, and supports shall conform to MSS SP-58 and MSS SP-69, except as modified herein. Pipe hanger types 5, 12, and 26 shall not be used.

a. Hangers: Type 3 shall not be used on insulated piping.

b. Inserts: Type 18 inserts shall be secured to concrete forms before concrete is placed. Continuous inserts which allow more adjustments may be used if they otherwise meet the requirements for Type 18 inserts.

c. C-Clamps: Type 19 and 23 C-clamps shall be torqued per MSS SP-69 and have both locknuts and retaining devices, furnished by the manufacturer. Field-fabricated C-clamp bodies or retaining devices are not acceptable.

d. Angle Attachments: Type 20 attachments used on angles and channels shall be furnished with an added malleable-iron heel plate or adapter.

e. Hangers: Type 24 may be used only on trapeze hanger systems or on fabricated frames.

f. Saddles and Shields: Where Type 39 saddle or Type 40 shield are permitted for a particular pipe attachment application, the Type 39 saddle, connected to the pipe, shall be used on all pipe 4 inches and larger when the temperature of the medium is 60 degrees F or higher. Type 40 shields shall be used on all piping less than 4 inches and all piping 4 inches and larger carrying medium less than 60 degrees F. A high density insulation insert of cellular glass shall be used under the Type 40 shield for piping 2 inches and larger.

g. Horizontal Pipe Supports: Horizontal pipe supports shall be spaced as specified in MSS SP-69 and a support shall be installed not over 1 foot from the pipe fitting joint at each change in direction of the piping. Pipe supports shall be spaced not over 5 feet apart at valves. Pipe hanger loads suspended from steel joist with hanger loads between panel points in excess of 50 pounds shall have the excess hanger loads suspended from panel points.

h. Vertical Pipe Supports: Vertical pipe shall be supported at each floor, except at slab-on-grade, and at intervals of not more than 15 feet, not more than 8 feet from end of risers, and at vent terminations.

i. Pipe Guides: Type 35 guides using, steel, reinforced polytetrafluoroethylene (PTFE) or graphite slides shall be provided where required to allow longitudinal pipe movement. Lateral restraints shall be provided as required. Slide materials shall be suitable for the system operating temperatures, atmospheric conditions, and bearing loads encountered.

j. Steel Slides: Where steel slides do not require provisions for restraint of lateral movement, an alternate guide method may be used. On piping 4 inches and larger, a Type 39 saddle shall be used. On piping under 4 inches,a Type 40 protection shield may be attached to the pipe or insulation and freely rest on a steel slide plate.

k. High Temperature Guides with Cradles: Where there are high system temperatures and welding to piping is not desirable, then the Type 35 guide shall include a pipe cradle, welded to the guide structure and strapped securely to the pipe. The pipe shall be separated from the slide material by at least 4 inches, or by an amount adequate for the insulation, whichever is greater.

l. Multiple Pipe Runs: In the support of multiple pipe runs on a common base member, a clip or clamp shall be used where each pipe crosses the base support member. Spacing of the base support members shall not exceed the hanger and support spacing required for an individual pipe in the multiple pipe run.

3.1.2.9 Pipe Alignment Guides

Pipe alignment guides shall be provided where indicated for expansion loops, offsets, and bends and as recommended by the manufacturer for expansion joints, not to exceed 5 feet on each side of each expansion joint, and in lines 4 inches or smaller not more than 2 feet on each side of the joint.

3.1.2.10 Anchors

Anchors shall be provided wherever necessary or indicated to localize expansion or to prevent undue strain on piping. Anchors shall consist of heavy steel collars with lugs and bolts for clamping and attaching anchor braces, unless otherwise indicated. Anchor braces shall be installed in the most effective manner to secure the desired results using turnbuckles where required. Supports, anchors, or stays shall not be attached where they will injure the structure or adjacent construction during installation or by the weight of expansion of the pipeline. Detailed drawings of pipe anchors shall be submitted for approval before installation.

3.1.2.11 Pipe Sleeves

Sleeves shall not be installed in structural members except where indicated or approved. Rectangular and square openings shall be as detailed. Each sleeve shall extend through its respective wall, floor, or roof, and shall be cut flush with each surface. Pipes passing through concrete or masonry wall or concrete floors or roofs shall be provided with pipe sleeves fitted into place at the time of construction. Unless otherwise indicated, sleeves shall be of such size as to provide a minimum of 1/4 inch all-around clearance between bare pipe and sleeves or between jacketed-insulation and sleeves. Sleeves in bearing walls, waterproofing membrane floors, and wet areas shall be steel pipe or cast iron pipe. Sleeves in non-bearing walls, floors, or ceilings may be steel pipe, cast

iron pipe, galvanized sheet metal with lock-type longitudinal seam and of the metal thickness indicated, or moisture resistant fiber or plastic. Except in pipe chases or interior walls, the annular space between pipe and sleeve or between jacket over-insulation and sleeve shall be sealed as indicated and specified in Section 07900 JOINT SEALING. Pipes passing through wall waterproofing membrane shall be sleeved as specified above, and a waterproofing clamping flange shall be installed.

a. Roof and Floor Penetrations: Pipes passing through roof or floor waterproofing membrane shall be installed through a 17 ounce copper sleeve, or a 0.032 inch thick aluminum sleeve, each within an integral skirt or flange. Flashing sleeve shall be suitably formed, and skirt or flange shall extend not less than 8 inches from the pipe and shall be set over the roof or floor membrane in a troweled coating of bituminous cement. The flashing sleeve shall extend up the pipe a minimum of 2 inches above highest floor level of the roof or a minimum of 10 inches above the roof, whichever is greater, or 10 inches above the floor. The annular space between the flashing sleeve and the bare pipe or between the flashing sleeve and the metal-jacket-covered insulation shall be sealed as indicated. Pipes up to and including 10 inches in diameter passing through roof or floor waterproofing membrane may be installed through a cast iron sleeve with caulking recess, anchor lugs, flashing clamp device, and pressure ring with brass bolts. Waterproofing membrane shall be clamped into place and sealant shall be placed in the caulking recess. In lieu of a waterproofing clamping flange and caulking and sealing of annular space between pipe and sleeve or conduit and sleeve, a modular mechanical type sealing assembly may be installed. Seals shall consist of interlocking synthetic rubber links shaped to continuously fill the annular space between the pipe/conduit and sleeve with corrosion protected carbon steel bolts, nuts, and pressure plates. Links shall be loosely assembled with bolts to form a continuous rubber belt around the pipe with a pressure plate under each bolt head and each nut. After the seal assembly is properly positioned in the sleeve, tightening of the bolt shall cause the rubber sealing elements to expand and provide a watertight seal between the pipe/conduit seal between the pipe/conduit and the sleeve. Each seal assembly shall be sized as recommended by the manufacturer to fit the pipe/conduit and sleeve involved. The Contractor electing to use the modular mechanical type seals shall provide sleeves of the proper diameters.

b. Fire-Rated Walls and Partitions: Penetration of fire-rated walls and partitions shall be sealed as specified in Section 07840 FIRESTOPPING.

3.1.2.12 Escutcheons

Finished surfaces where exposed piping, bare or insulated, pass through floors, walls, or ceilings, except in boiler, utility, or equipment rooms, shall be provided with escutcheons. Where sleeves project slightly from floors, special deep-type escutcheons shall be used. Escutcheon shall be secured to pipe or pipe covering.

3.1.2.13 Access Panels

Access panels shall be provided for all concealed valves, vents, controls, and items requiring inspection or maintenance. Access panels shall be of sufficient size and located so that the concealed items may be serviced and maintained or completely removed and replaced. Access panels shall be as specified in Section 05500 MISCELLANEOUS METALS.

3.1.3 Water Piping

Pipe and fitting installation shall conform to the requirements of ASME B31.1. Pipe shall be cut accurately to measurements established at the jobsite, and worked into place without springing or forcing, completely clearing all windows, doors, and other openings. Cutting or other weakening of the building structure to facilitate piping installation will not be permitted without written approval. Pipe or tubing shall be cut square, shall have burrs removed by reaming, and shall permit free expansion and contraction without causing damage to the building structure, pipe, joints, or hangers.

3.1.3.1 Directional Changes

Changes in direction shall be made with fittings, except that bending of pipe 4 inches and smaller will be permitted, provided a pipe bender is used and wide weep bends are formed. The centerline radius of bends shall not be less than 6 diameters of the pipe. Bent pipe showing kinks, wrinkles, flattening, or other malformations will not be accepted.

3.1.3.2 Functional Requirements

Horizontal supply mains shall pitch down in the direction of flow as indicated. The grade shall not be less than 1 inch in 40 feet. Reducing fittings shall be used for changes in pipe sizes. Open ends of pipelines and equipment shall be capped or plugged during installation to keep dirt or other foreign materials out of the system. Pipe not otherwise specified shall be uncoated. Connections to appliances shall be made with malleable iron unions for steel pipe 2-1/2 inches or less in diameter, and with flanges for pipe 3 inches and above in diameter. Connections between ferrous and copper piping shall be electrically isolated from each other with dielectric unions or flanges. All piping located in air plenums shall conform to NFPA 90A requirements. Pipe and fittings installed in inaccessible conduits or trenches under concrete floor slabs shall be welded.

3.1.3.3 Valves

Isolation gate or ball valves shall be installed on each side of each piece of equipment, at the midpoint of all looped mains, and at any other points indicated or required for draining, isolating, or sectionalizing purpose. Isolation valves may be omitted where balancing cocks are installed to provide both balancing and isolation functions. Each valve except check valves shall be identified. Valves in horizontal lines shall be installed with stems horizontal or above.

3.1.3.4 Air Vents

Air vents shall be provided at all high points, on all water coils, and where indicated to ensure adequate venting of the piping system.

3.1.3.5 Drains

Drains shall be provided at all low points and where indicated to ensure complete drainage of the piping. Drains shall be accessible, and shall consist of nipples and caps or plugged tees unless otherwise indicated.

3.1.3.6 Flexible Pipe Connectors

Preinsulated flexible pipe connectors shall be attached to other components in strict accordance with the latest printed instructions of the manufacturer to ensure a vapor tight joint. Hangers, when required to suspend the connectors, shall be of the type recommended by the flexible pipe connector manufacturer and shall be provided at the intervals recommended.

3.1.3.7 Flanges and Unions

Except where copper tubing is used, union or flanged joints shall be provided in each line immediately preceding the connection to each piece of equipment or material requiring maintenance such as coils, pumps, control valves, and other similar items.

3.1.4 Refrigeration Piping

Unless otherwise specified, pipe and fittings installation shall conform to requirements of ASME B31.5. Pipe shall be cut accurately to measurement established at the jobsite and worked into place without springing or forcing. Cutting or otherwise weakening of the building structure to facilitate piping installation will not be permitted without written approval. Pipes shall be cut square, shall have burrs removed by reaming, and shall be installed in a manner to permit free expansion and contraction without damage to joints or hangers. Filings, dust, or dirt shall be wiped from interior of pipe before connections are made.

3.1.4.1 Directional Changes

Changes in direction shall be made with fittings, except that bending of pipe 4 inches and smaller will be permitted, provided a pipe bender is used and wide-sweep bends are formed. The centerline radius of bends shall not be less than 6 diameters of the pipe. Bent pipe showing kinks, wrinkles, or other malformations will not be accepted.

3.1.4.2 Functional Requirements

All piping shall be installed 1/2 inch per 10 feet of pipe in the direction of flow to ensure adequate oil drainage. Open ends of refrigerant lines or equipment shall be properly capped or plugged during installation to keep moisture, dirt, or other foreign material out of the

system. Piping shall remain capped until installation. Equipment piping shall be in accordance with the equipment manufacturer's recommendations and the contract drawings.

3.1.4.3 Valves

a. Stop valves shall be installed on each side of each piece of equipment such as compressors condensers, evaporators, receivers, and other similar items in multiple-unit installation, to provide partial system isolation as required for maintenance or repair. Angle and globe valves shall be installed with stems horizontal unless otherwise indicated. Ball valves shall be installed with stems positioned to facilitate operation and maintenance. All valves except check valves shall be identified with a brass or aluminum tag not less than 1-3/8 inch in diameter, correctly stamped to explain the valve function, and with a number for identification. Tags shall be secured to the valve with No. 12 AWG copper wire.

b. Expansion valves shall be installed with the thermostatic expansion valve bulb located on top of the suction line when the suction line is less than 2-1/8 inches in diameter and at the 4 o'clock or 8 o'clock position on lines larger than 2-1/8 inches. The bulb shall be securely fastened with two clamps. The bulb shall be insulated. The bulb shall installed in a horizontal portion of the suction line, if possible, with the pigtail on the bottom. If the bulb must be installed in a vertical line, the bulb tubing shall be facing up.

3.1.4.4 Vibration Dampers

Vibration damper shall be provided in the suction and discharge lines on spring mounted compressors. Vibration dampers shall be installed parallel with the shaft of the compressor and shall be anchored firmly at the upstream end on the suction line and the downstream end in the discharge line.

3.1.4.5 Strainers

Strainers shall be provided immediately ahead of all solenoid valves and expansion devices. Strainers may be an integral part of the expansion valve.

3.1.4.6 Filter Dryer

A liquid line filter dryer shall be provided on each refrigerant circuit located such that all liquid refrigerant passes through a filter dryer. The filter dryer shall be sized in accordance with the manufacturer's recommendations for the system in which it is installed. The filter dryer shall be installed such that the filter dryer can be isolated from the system, the isolated portion of the system evacuated, and the filter dryer replaced. Filter dryers shall be installed in the horizontal position except replaceable core filter dryers may be installed in the vertical position with the access flange on the bottom.

3.1.4.7 Sight Glass

A moisture indicating sight glass shall be installed in all refrigerant circuits down stream of all filter dryers.

3.1.4.8 Discharge Line Oil Separator

Discharge line oil separator shall be provided in the discharge line from each compressor. Oil return line shall be connected to the compressor as recommended by the compressor manufacturer.

3.1.4.9 Accumulator

Accumulators shall be provided in the suction line to each compressor.

3.1.5 Mechanical Room Ventilation

Mechanical rooms containing a central refrigerated air-conditioning system shall be ventilated to the outdoors. The ventilation system shall be in accordance with Section 15895 AIR SUPPLY, DISTRIBUTION, VENTILATION, AND EXHAUST SYSTEM.

3.1.6 Field Applied Insulation

Field applied insulation other than that specified for water boxes and headers shall be as specified in Section 15080 THERMAL INSULATION FOR MECHANICAL SYSTEMS.

3.1.7 Factory Applied Insulation

3.1.7.1 Refrigerant Suction Lines

Refrigerant suction lines between the cooler and each compressor and cold gas inlet connections to gas cooled motors shall be insulated with not less than 3/4 inch thick unicellular plastic foam.

3.1.7.2 Liquid Coolers

Liquid coolers (including chilled water headers or boxes), which may have factory or field applied insulation, shall be insulated with unicellular plastic foam. Insulation shall be not less than 3/4 inch thick or have a maximum thermal conductivity of 0.28 Btu/(hr.)(sq. ft.)(degree F.))). In lieu of the above insulation, a 2 inch thickness of urethane foam may be used. Urethane foam shall be completely covered and sealed with a sheet metal jacket not lighter than 20 gauge. Insulation on heads of coolers shall be constructed to provide easy removal and replacement of heads without damage to the insulation.

3.2 TESTS

3.2.1 Field Tests

Tests shall be conducted in the presence of the Contracting Officer. Water

and electricity required for the tests will be furnished by the Government. Any material, equipment, instruments, and personnel required for the test shall be provided by the Contractor. The services of a qualified technician shall be provided as required to perform all tests and procedures indicated herein. Field tests shall be coordinated with Section 15990 TESTING, ADJUSTING, AND BALANCING OF HVAC SYSTEMS.

3.2.1.1 Water Pipe Testing

After cleaning, water piping shall be hydrostatically tested at a pressure equal to 150 percent of the total system operating pressure for period of time sufficient to inspect every joint in the system and in no case less than 2 hours. Leaks shall be repaired and piping retested until test is successful. No loss of pressure shall be allowed. Leaks shall be repaired by rewelding or replacing pipe or fittings. Caulking of joints will not be permitted. Concealed and insulated piping shall be tested in place before concealing.

3.2.1.2 Test of Backflow Prevention Assemblies

Backflow prevention assemblies shall be tested in accordance with Section 15400 PLUMBING, GENERAL PURPOSE.

3.2.1.3 Refrigerant Pipe Testing

a. Refrigerant Leakage Test: After all components of the refrigerant system have been installed and the piping connected, the system shall be subjected to a refrigerant leakage test. The refrigerant leakage test shall be done with dry nitrogen before any refrigerant pipe is insulated or covered. High and low side of the refrigerant system shall be tested for the minimum refrigerant leakage test pressure specified in ASHRAE 15, for the refrigerant employed in the system. System shall be proved tight and free of leaks by allowing the refrigerant leakage test pressure to remain on the system for 24 hours with no drop in pressure. The initial test pressure and surrounding air temperature will be recorded. After the 24 hour hold period, the final system pressure and surrounding air temperature will be recorded. A correction of 0.3 psi shall be allowed for each degree F change in the initial and final temperature of the surrounding air, plus for an increase and minus for a decrease. The system shall have passed the refrigerant leakage test if the corrected final system pressure is equal to the initial system test pressure. If the pressures are not equal, the leaks shall be located and repaired.

b. Refrigerant Leaks: To repair leaks, the joint shall be taken apart, thoroughly cleaned, and remade as a new joint. Joints repaired by caulking or remelting and adding more brazing material will not be acceptable. After leak repairs have been made, the refrigerant leakage test shall be conducted again.

c. Evacuation Test: After the foregoing tests have been satisfactorily completed and the pressure relieved, entire system shall be evacuated to an absolute pressure of 300 microns. During

evacuation of the system, the ambient temperature shall be higher than 35 degrees F. Vacuum line shall be closed, and the system shall stand for 1 hour. After this period, the absolute pressure shall not exceed 500 microns. If the pressure rises over 500 microns, the system shall continue to be evacuated until the system reaches 300 microns and can stand for 1 hour with the vacuum line closed without the absolute pressure rising over 500 microns. During evacuation, pressures shall be recorded by a thermocouple type, electronic type, or a calibrated-micron type gauge.

3.2.1.4 Cooling Tower Tests

After cooling tower has been found acceptable under the visual and dimensional examination, a field performance test shall be performed in accordance with ASME ANSI/ASME PTC 23 or CTI ACT-105 Vol 1 Code. The electromagnetic interference suppression test and the salt spray test is not required. The cooling tower test shall be performed in the presence of a Government representative.

3.2.2 System Performance Tests

After the foregoing tests have been completed and before each refrigeration system is accepted, tests to demonstrate the general operating characteristics of all equipment shall be conducted by a registered professional engineer or an approved manufacturer's startup representative experienced in system startup and testing, at such times as directed. Tests shall cover a period of not less than 5 days for each system and shall demonstrate that the entire system is functioning in accordance with the drawings and specifications. Corrections and adjustments shall be made as necessary and tests shall be re-conducted to demonstrate that the entire system is functioning as specified.

3.2.3 Condenser Water Quality Tests

The condenser water shall be analyzed and water treated a minimum of once a month for a period of one year by the water treatment company. The analysis shall include the following information recorded in accordance with ASTM D 596.

Date of Sample	_____	
Temperature	_____	degrees F.
Silica (SiO2)	_____	ppm (mg/1)
Insoluble	_____	ppm (mg/1)
Iron and Aluminum Oxides	_____	ppm (mg/1)
Calcium (Ca)	_____	ppm (mg/1)
Magnesium (Mg)	_____	ppm (mg/1)
Sodium and Potassium (Na and K)	_____	ppm (mg/1)
Carbonate (HCO3)	_____	ppm (mg/1)
Sulfate (SO4)	_____	ppm (mg/1)
Chloride (Cl)	_____	ppm (mg/1)
Nitrate (NO3)	_____	ppm (mg/1)
Turbidity	_____	unit
pH	_____	

Residual Chlorine	_____ ppm (mg/1)
Total Alkalinity	_____ epm (meq/1)
Non-Carbonate Hardness	_____ epm (meq/1)
Total Hardness	_____ epm (meq/1)
Dissolved Solids	_____ ppm (mg/1)
Fluorine	_____ ppm (mg/1)
Conductivity	_____ micrmho/cm

3.3 INSPECTIONS

At the conclusion of the one year period, the cooling tower and condenser shall be inspected by the Manufacturer for problems due to corrosion, scale, and biological growth. If the cooling tower and condenser are found not to conform to the manufacturers recommended conditions, and the water treatment company recommendations have been followed; the water treatment company shall provide all chemicals and labor for cleaning or repairing the equipment as required by the manufacturer's recommendations.

3.4 MANUFACTURER'S FIELD SERVICE

The services of a factory-trained representative shall be provided for 10 days. The representative shall advise on the following:

a. Hermetic machines:

(1) Testing hermetic water-chilling unit under pressure for refrigerant leaks; evacuation and dehydration of machine to an absolute pressure of not over 300 microns.

(2) Charging the machine with refrigerant.

(3) Starting the machine.

3.5 CLEANING AND ADJUSTING

3.5.1 Piping

Pipes shall be cleaned free of scale and thoroughly flushed of all foreign matter. A temporary bypass shall be provided for all water coils to prevent flushing water from passing through coils. Strainers and valves shall be thoroughly cleaned. Prior to testing and balancing, air shall be removed from all water systems by operating the air vents. Temporary measures, such as piping the overflow from vents to a collecting vessel shall be taken to avoid water damage during the venting process. Air vents shall be plugged or capped after the system has been vented.

3.5.2 Equipment

Equipment shall be wiped clean, with all traces of oil, dust, dirt, or paint spots removed. Temporary filters shall be provided for all fans that are operated during construction, and new filters shall be installed after all construction dirt has been removed from the building. System shall be maintained in this clean condition until final acceptance. Bearings shall be properly lubricated with oil or grease as recommended by the

manufacturer. Belts shall be tightened to proper tension. Control valves and other miscellaneous equipment requiring adjustment shall be adjusted to setting indicated or directed. Fans shall be adjusted to the speed indicated by the manufacturer to meet specified conditions.

3.6 DEMONSTRATIONS

Contractor shall conduct a training course for the operating staff as designated by the Contracting Officer. The training period shall consist of a total 40 hours of normal working time and start after the system is functionally completed but prior to final acceptance tests. The field instructions shall cover all of the items contained in the approved operation and maintenance manuals as well as demonstrations of routine maintenance operations.

-- End of Section --

SECTION 15895

AIR SUPPLY, DISTRIBUTION, VENTILATION, AND EXHAUST SYSTEM

PART 1 GENERAL

1.1 REFERENCES

The publications listed below form a part of this specification to the extent referenced. The publications are referred to in the text by basic designation only.

AIR CONDITIONING AND REFRIGERATION INSTITUTE (ARI)

ARI 350	(1986) Sound Rating of Non-Ducted Indoor Air-Conditioning Equipment
ARI ANSI/ARI 410	(1991) Forced-Circulation Air-Cooling and Air-Heating Coils
ARI ANSI/ARI 430	(1989) Central-Station Air-Handling Units
ARI ANSI/ARI 440	(1993) Room Fan-Coil and Unit Ventilator
ARI Guideline D	(1987) Application and Installation of Central Station Air-Handling Units

AIR MOVEMENT AND CONTROL ASSOCIATION (AMCA)

AMCA ANSI/AMCA 210	(1985) Laboratory Methods of Testing Fans for Rating
AMCA 300	(1996) Reverberant Room Method for Sound Testing of Fans

AMERICAN BEARING MANUFACTURERS ASSOCIATION (ABEMA)

ABEMA Std 9	(1990) Load Ratings and Fatigue Life for Ball Bearings
ABEMA Std 11	(1990) Load Ratings and Fatigue Life for Roller Bearings

AMERICAN SOCIETY FOR TESTING AND MATERIALS (ASTM)

ASTM A 53	(1997) Pipe, Steel, Black and Hot-Dipped, Zinc-Coated, Welded and Seamless
ASTM A 123	(1989a) Zinc (Hot-Dip Galvanized) Coatings on Iron and Steel Products

ASTM A 924/A 924M	(1996a) General Requirements for Steel Sheet, Metallic-Coated by the Hot-Dip Process
ASTM B 117	(1997) Operating Salt Spray (FOG) Apparatus
ASTM C 916	(1985; R 1996) Adhesives for Duct Thermal Insulation
ASTM C 1071	(1991) Thermal and Acoustical Insulation (Glass Fiber, Duct Lining Material)
ASTM D 520	(1984; R 1995) Zinc Dust Pigment
ASTM D 1654	(1992) Evaluation of Painted or Coated Specimens Subjected to Corrosive Environments
ASTM D 3359	(1995a) Measuring Adhesion by Tape Test
ASTM E 84	(1996a) Surface Burning Characteristics of Building Materials
ASTM E 437	(1992) Industrial Wire Cloth and Screens (Square Opening Series)

AMERICAN SOCIETY OF HEATING, REFRIGERATING AND AIR-CONDITIONING ENGINEERS (ASHRAE)

ASHRAE 52.1	(1992) Gravimetric and Dust-Spot Procedures for Testing Air-Cleaning Devices Used in General Ventilation for Removing Particulate Matter
ASHRAE ANSI/ASHRAE 68	(1986) Laboratory Method of Testing In-Duct Sound Power Measurement Procedures for Fans
ASHRAE 70	(1991) Method of Testing for Rating the Performance of Air Outlets and Inlets

COMMERCIAL ITEM DESCRIPTIONS (CID)

CID A-A-1419	(Rev D) Filter Element, Air Conditioning (Viscous-Impingement and Dry Types, Replaceable)

NATIONAL ELECTRICAL MANUFACTURERS ASSOCIATION (NEMA)

NEMA MG 1	(1993; Rev 1; Rev 2; Rev 3) Motors and Generators

NATIONAL FIRE PROTECTION ASSOCIATION (NFPA)

NFPA 90A	(1996) Installation of Air Conditioning and Ventilating Systems

SHEET METAL AND AIR CONDITIONING CONTRACTORS' NATIONAL ASSOCIATION (SMACNA)

SMACNA-05	(1992) Fire, Smoke and Radiation Damper Installation Guide for HVAC Systems
SMACNA-06	(1995) HVAC Duct Construction Standards - Metal and Flexible
SMACNA-10	(1985) HVAC Air Duct Leakage Test Manual

UNDERWRITERS LABORATORIES (UL)

UL 94	(1996; Rev thru Jul 1997) Tests for Flammability of Plastic Materials for Parts in Devices and Appliances
UL 181	(1996; Rev Oct 1996) Factory-Made Air Ducts and Air Connectors
UL 214	(1997) Tests for Flame-Propagation of Fabrics and Films
UL 555	(1995) Fire Dampers
UL 586	(1996) High-Efficiency, Particulate, Air Filter Units
UL 723	(1996) Test for Surface Burning Characteristics of Building Materials
UL 900	(1994; Rev thru Apr 1997) Test Performance of Air Filter Units
UL 1995	(1995; Rev thru Feb 97) Heating and Cooling Equipment
UL Bld Mat Dir	(1997) Building Materials Directory
UL Elec Const Dir	(1998) Electrical Construction Equipment Director

1.2 COORDINATION OF TRADES

Ductwork, piping offsets, fittings, and accessories shall be furnished as required to provide a complete installation and to eliminate interference with other construction.

1.3 DELIVERY AND STORAGE

Equipment delivered and placed in storage shall be stored with protection

from the weather, humidity and temperature variations, dirt and dust, or other contaminants.

1.4 SUBMITTALS

Government approval is required for submittals with a "GA" designation; submittals having an "FIO" designation are for information only. The following shall be submitted in accordance with Section 01330 SUBMITTAL PROCEDURES:

SD-01 Data

Components and Equipment Data; GA.

Manufacturer's catalog data shall be included with the detail drawings for the following items. The data shall be highlighted to show model, size, options, etc., that are intended for consideration. Data shall be adequate to demonstrate compliance with contract requirements for the following:

a. Piping Components
b. Ductwork Components
c. Air Systems Equipment
d. Air Handling Units
e. Energy Recovery Devices
f. Terminal Units

SD-04 Drawings

Air Supply, Distribution, Ventilation, and Exhaust Equipment; GA.

Drawings shall consist of equipment layout including assembly and installation details and electrical connection diagrams; ductwork layout showing the location of all supports and hangers, typical hanger details, gauge reinforcement, reinforcement spacing rigidity classification, and static pressure and seal classifications; and piping layout showing the location of all guides and anchors, the load imposed on each support or anchor, and typical support details. Drawings shall include any information required to demonstrate that the system has been coordinated and will properly function as a unit and shall show equipment relationship to other parts of the work, including clearances required for operation and maintenance.

Coordination Drawings; FIO.

The Contractor shall prepare Coordination Drawings showing all of the work (equipment, piping, ductwork, conduit, etc.) to be installed as part of the work of this section of the specifications. The Coordination Drawings shall be on reproducible transparencies at not less than 3/8 inch = 1 ft.-0 inch scale.

This contractor shall show all of the work associated with this section of the specifications in the sequence prescribed below. The sequence of coordination drawings shall be HVAC-PLBG-FP-ELEC-GC unless otherwise determined by the contracting officer or the general contractor.

This contractor shall attend a series of meetings arranged by the General Contractor to resolve any real or apparent interferences or conflicts with the work of the other Contractors or with ceiling heights shown on the drawings.

This contractor shall then make adjustments to his work on the Coordination Drawings to resolve any real or apparent interferences or conflicts.

After any real or apparent interferences and conflicts have been incorporated into the Coordination Drawings, this contractor shall "sign-off" the final Coordination Drawings.

This contractor shall not install any of his work prior to "sign-off" of final Coordination Drawings. If the work specified in this section proceeds prior to sign-off of Coordination Drawings, any change to this work to correct the interferences and conflicts which result will be made by this contractor at no additional cost to the project.

Coordination Drawings are for all contractor's use during construction and shall not be construed as replacing any shop, "as-built", or Record Drawings required elsewhere in these Contract Documents.

Review of Coordination Drawings shall not relieve any contractor from his overall responsibility for coordination of all work performed pursuant to the Contract or from any other requirements of the Contract.

SD-06 Instructions

Test Procedures; GA.

Proposed test procedures for piping hydrostatic test, ductwork leak test, and performance tests of systems, at least 2 weeks prior to the start of related testing.

Welding Procedures; FIO.

A copy of qualified welding procedures, at least 2 weeks prior to the start of welding operations.

System Diagrams; GA.

Proposed diagrams, at least 2 weeks prior to start of related testing. System diagrams that show the layout of equipment, piping, and ductwork, and typed condensed operation manuals explaining preventative maintenance procedures, methods of checking the system for normal, safe operation, and procedures for safely starting and stopping the system shall be framed under glass or laminated plastic. After approval, these items shall be posted where directed.

SD-07 Schedules

Test Schedules; FIO.

Proposed test schedules for hydrostatic test of piping, ductwork leak test, and performance tests, at least 2 weeks prior to the start of related testing.

Field Training Schedule; GA.

Proposed schedule for field training, at least 2 weeks prior to the start of related training.

SD-08 Statements

Similar Services; FIO.

Statement demonstrating successful completion of similar services on at least 5 projects of similar size and scope, at least 2 weeks prior to submittal of other items required by this section.

Welding Qualification; FIO.

A list of names and identification symbols of qualified welders and welding operators, at least 2 weeks prior to the start of welding operations.

SD-09 Reports

Test Reports; GA.

Test reports for the piping hydrostatic test, ductwork leak test, and performance tests in booklet form, upon completion of testing. Reports shall document phases of tests performed including initial test summary, repairs/adjustments made, and final test results.

SD-13 Certificates

Bolts; FIO.

Written certification from the bolt manufacturer that the bolts furnished comply with the requirements of this specification. The certification shall include illustrations of product markings, and the number of each type of bolt to be furnished.

SD-19 Operation and Maintenance Manuals

Air Supply, Distribution, Ventilation, and Exhaust Manuals; FIO.

Six manuals listing step-by-step procedures required for system startup, operation, shutdown, and routine maintenance, at least 2 weeks prior to field training. The manuals shall include the manufacturer's name, model number, parts list, list of parts and tools that should be kept in stock by the owner for routine maintenance including the name of a local supplier, simplified wiring and controls diagrams, troubleshooting guide, and recommended service organization (including address and telephone number) for each item of equipment. Each service organization submitted shall be capable of providing 4 hour onsite response to a service call on an emergency basis.

PART 2 PRODUCTS

2.1 STANDARD PRODUCTS

Components and equipment shall be standard products of a manufacturer regularly engaged in the manufacturing of products that are of a similar material, design and workmanship. The standard products shall have been in satisfactory commercial or industrial use for 2 years before bid opening. The 2-year experience shall include applications of components and equipment under similar circumstances and of similar size. The 2 years must be satisfactorily completed by a product which has been sold or is offered for sale on the commercial market through advertisements, manufacturers' catalogs, or brochures. Products having less than a 2-year field service record will be acceptable if a certified record of satisfactory field operation, for not less than 6000 hours exclusive of the manufacturer's factory tests, can be shown. The equipment items shall be supported by a service organization.

2.2 ASBESTOS PROHIBITION

Asbestos and asbestos-containing products shall not be used.

2.3 NAMEPLATES

Equipment shall have a nameplate that identifies the manufacturer's name, address, type or style, model or serial number, and catalog number.

2.4 EQUIPMENT GUARDS AND ACCESS

Belts, pulleys, chains, gears, couplings, projecting setscrews, keys, and other rotating parts exposed to personnel contact shall be fully enclosed or guarded according to OSHA requirements. High temperature equipment and piping exposed to contact by personnel or where it creates a potential fire hazard shall be properly guarded or covered with insulation of a type specified. Catwalks shall be provided where shown and shall be constructed according to Section 05500 MISCELLANEOUS METAL.

2.5 PIPING COMPONENTS

2.5.1 General

For Piping Components, refer to Section 15562, HEATING AND UTILITIES SYSTEMS, CENTRAL STEAM; and Section 15650, CENTRAL REFRIGERATED AIR-CONDITIONING SYSTEM.

2.6 ELECTRICAL WORK

Electrical motor-driven equipment specified shall be provided complete with motor, motor starter, and controls. Unless otherwise specified, electric equipment, including wiring and motor efficiencies, shall be according to Section 16415 ELECTRICAL WORK, INTERIOR. Electrical characteristics and enclosure type shall be as shown. Unless otherwise indicated, motors of 1 hp and above shall be high efficiency type. Motor starters shall be

provided complete with thermal overload protection and other appurtenances necessary. Each motor shall be according to NEMA MG 1 and shall be of sufficient size to drive the equipment at the specified capacity without exceeding the nameplate rating of the motor. Manual or automatic control and protective or signal devices required for the operation specified, and any control wiring required for controls and devices, but not shown, shall be provided. Where two-speed or variable-speed motors are indicated, solid-state variable-speed controller may be provided to accomplish the same function. Solid-state variable-speed controllers shall be utilized for motors rated 10 hp or less. Adjustable frequency drives shall be used for larger motors. Additional Requirements for motors, motor controls and wiring shall be as indicated on the Drawings.

2.7 VARIABLE SPEED CONTROLS

The variable speed motor controller shall convert 460 volt plus 15 percent, minus 5 percent, three phase, 60 Hz (plus or minus 2 Hz) utility power to adjustable voltage/frequency, three phase, ac power for stepless motor control from 5 percent to 105 percent of base spee d.

2.7.1 Description

The variable speed drive shall produce an adjustable ac voltage/frequency output for complete motor speed control. The variable speed drive shall be automatically controlled by a grounded electronic control signal. The variable speed drive shall be self contained, totally enclosed in a NEMA MG 1 ventilated cabinet and capable of operation between 32 and 104 degrees F. The variable speed drive maximum output current rating shall be equal to or exceed the motor nameplate full load. The manufacturer shall advise the maximum recommended motor sine wave current for each controller rating. Variable speed drive multiple motor operation at same frequency/speed shall be possible as long as the sum of connected motor full load sine wave currents are less than or equal to the variable speed drive maximum continuous current rating. Variable speed drive shall be 95 percent efficient at 100 percent rated output power, 60 Hz.

2.7.2 Governing Requirements

Variable speed drives shall conform to the following requirements:

a. Variable speed drive shall comply with 47 CFR 15 regulation of RFI/EM1 emission limits for Class A computing devices. The FCC label of compliance shall be displayed on the variable speed drive.

b. The variable speed drive and options shall comply with the applicable requirements and the standards of the American National Standards Institute (ANSI).

c. Variable speed drive and option design and construction thereof shall comply with all applicable provisions of NFPA 70, Article 43D, Sections A-L.

2.7.3 Quality Assurance

To ensure quality the variable speed drive shall be subject to the following tests:

a. The integrated circuits shall undergo a 160-hour "burn-in" to test reliability. During the "burn-in" the temperature shall be cycled between 32 and 158 degrees F.

b. The completed unit shall undergo a fully loaded 24-hour "burn-in."

c. The unit shall be subject to a series of in-plant quality controlled inspections before approval for shipment from manufacturer's facilities.

2.7.4 Service

The variable speed drive shall be supplied with the following:

a. One-year parts and labor warranty.

b. A troubleshooting guide to help the building operator determine what steps must be taken to correct any problem that may exist in the system.

2.7.5 Basic Features

The variable speed drive shall have the following basic features:

a. Hand/Off/Auto Operation.
b. Manual/Auto speed reference switch.
c. Minimum/maximum adjustable speeds.
d. Speed potentiometer.
e. Auto restart.
f. Linear timed acceleration and deceleration for soft starting/stopping.
g. 3-63 Hz controlled speed range. (Factory set at 15 Hz minimum).
h. Terminal connections for time clock control, fire, smoke, freeze detectors, and EP relay pre-set speed override.
i. Output frequency terminals for remote metering.
j. Bypass switch.

2.7.6 Protective Circuits and Features

The variable speed drive controller shall include the following protective circuits/features:

a. Current limits to 100 percent design by slowing down motor.
b. Instantaneous Electronic Trip - automatically shutdown motor if current exceed 120 percent of design or phase-to-phase output short circuit occurs.
c. The variable speed drive will restart automatically when input line returns to normal in the event of intermittent power outage or phase loss or overvoltage shutdown.
d. Input power protection shuts down the unit if the following faults occur; low input line voltage or loss of an input phase.

e. Insensitive to incoming power phase.
f. Fast acting current limiting input fuses, (Class J) rated with 200,000 interrupting amperes capability.
g. Isolated 115 volt control circuit and dedicated control transformer.
h. Line-to-line fault protection.
i. Line-to-ground short circuiting and accidental motor grounding protection.
j. Output thermal overload relay trip.

2.7.7 Adjustments

The variable speed drive has the following adjustments available via potentiometers located on the faceplate of a single, regulator printed circuit board.

a. Minimum speed: 0-75 percent
b. Maximum speed: 100 percent

2.8 CONTROLS

Controls shall be provided as specified in Section 15951 DIRECT DIGITAL CONTROL FOR HVAC.

2.9 DUCTWORK COMPONENTS

2.9.1 Metal Ductwork

All aspects of metal ductwork construction, including all fittings and components, shall comply with SMACNA-06 unless otherwise specified. Refer to Table under Article 3.10 DUCTWORK CONSTRUCTION REQUIREMENTS in this Section for pressure classification. Elbows shall be radius type with a centerline radius of 1-1/2 times the width or diameter of the duct where space permits. Otherwise, elbows having a minimum radius equal to the width or diameter of the duct or square elbows with factory fabricated turning vanes may be used. Static pressure Class 1/2, 1, and 2 inch w.g. ductwork shall meet the requirements of Seal Class C. Class 3 through 10 inch shall meet the requirements of Seal Class A. Sealants shall conform to fire hazard classification specified in Section 15080 THERMAL INSULATION FOR MECHANICAL SYSTEMS. Pressure sensitive tape shall not be used as a sealant. Spiral lock seam duct, and flat oval shall be made with duct sealant and locked with not less than 3 equally spaced drive screws or other approved methods indicated in SMACNA-06. The sealant shall be applied to the exposed male part of the fitting collar so that the sealer will be on the inside of the joint and fully protected by the metal of the duct fitting. One brush coat of the sealant shall be applied over the outside of the joint to at least 2 inch band width covering all screw heads and joint gap. Dents in the male portion of the slip fitting collar will not be acceptable. Outdoor air intake ducts and plenums shall be fabricated with watertight soldered or brazed joints and seams. Refer to Article 3.10 of this Section for construction pressure classifications and sealing classifications.

2.9.1.1 Transitions

Diverging air flow transitions shall be made with each side pitched out a maximum of 15 degrees, for an included angle of 30 degrees. Transitions for converging air flow shall be made with each side pitched in a maximum of 30 degrees, for an included angle of 60 degrees, or shall be as indicated. Factory-fabricated reducing fittings for systems using round duct sections when formed to the shape of the ASME short flow nozzle, need not comply with the maximum angles specified.

2.9.1.2 Metallic Flexible Duct for Medium Pressure Applications Including VAV Boxes

Metallic type duct shall be single-ply galvanized steel, self supporting to 8 foot spans. Duct shall be of corrugated/interlocked, folded and knurled type seam construction, bendable without damage through 180 degrees with a throat radius equal to 1/2 duct diameter. Duct shall conform to UL 181and shall be rated for positive or negative working pressure of 15 inches water gauge at 350 degrees F when duct is aluminum, and 650 degrees F when duct is galvanized steel or stainless steel.

2.9.1.3 Insulated Nonmetallic Flexible Duct Runouts for Low Pressure Applications

Flexible duct runouts shall be used only where indicated. Runout length shall be as shown on the drawings, but shall in no case exceed 10 feet. Runouts shall be preinsulated, factory fabricated, and shall comply with NFPA 90A and UL 181. Either field or factory applied vapor barrier shall be provided. Where coil induction or high velocity units are supplied with vertical air inlets, a streamlined and vaned and mitered elbow transition piece shall be provided for connection to the flexible duct or hose. The last elbow to these units, other than the vertical air inlet type, shall be a die-stamped elbow and not a flexible connector. Insulated flexible connectors may be used as runouts. The insulated material and vapor barrier shall conform to the requirements of Section 15080 THERMAL INSULATION FOR MECHANICAL SYSTEMS. The insulation material surface shall not be exposed to the air stream.

2.9.1.4 General Service Duct Connectors

A flexible duct connector approximately 6 inches in width shall be provided where sheet metal connections are made to fans or where ducts of dissimilar metals are connected. For round/oval ducts, the flexible material shall be secured by stainless steel or zinc-coated, iron clinch-type draw bands. For rectangular ducts, the flexible material locked to metal collars shall be installed using normal duct construction methods. The composite connector system shall comply with UL 214 and be classified as "flame-retarded fabrics" in UL Bld Mat Dir.

2.9.2 Ductwork Accessories

2.9.2.1 Duct Access Doors

Access doors shall be provided in ductwork and plenums where indicated and at all air flow measuring primaries, automatic dampers, fire dampers,

coils, temperature sensors, access to all plenums, and other apparatus requiring service and inspection in the duct system, and unless otherwise shown, shall conform to SMACNA-06. Access doors shall be provided upstream and downstream of air flow measuring primaries and heating and cooling coils. Doors shall be minimum 15 x 18 inches, unless otherwise shown. Where duct size will not accommodate this size door, the doors shall be made as large as practicable. Doors 24 x 24 inches or larger shall be provided with fasteners operable from both sides. Doors in insulated ducts shall be the insulated type.

2.9.2.2 Fire Dampers FLD

Fire dampers shall be 1-1/2 hour fire rated unless otherwise indicated. Fire dampers shall conform to the requirements of NFPA 90A and UL 555. Fire dampers shall be automatic operating type and shall have a dynamic rating suitable for the maximum air velocity and pressure differential to which it will be subjected. Fire dampers shall be approved for the specific application, and shall be installed according to their listing. Fire dampers shall be equipped with a steel sleeve or adequately sized frame installed in such a manner that disruption of the attached ductwork, if any, will not impair the operation of the damper. Sleeves or frames shall be equipped with perimeter mounting angles attached on both sides of the wall or floor opening. Fire dampers shall be out of the air streamor multi-blade type. Dampers shall not reduce the duct or the air transfer opening cross-sectional area. Dampers shall be installed so that the centerline of the damper depth or thickness is located in the centerline of the wall, partition or floor slab depth or thickness. Unless otherwise indicated, the installation details given in SMACNA-05 and in manufacturer's instructions for fire dampers shall be followed.

2.9.2.3 Splitters and Manual Balancing Dampers

Splitters and manual balancing dampers shall be furnished with accessible operating mechanisms. Where operators occur in finished portions of the building, operators shall be chromium plated with all exposed edges rounded. Splitters shall be operated by quadrant operators or 3/16 inch rod brought through the side of the duct with locking setscrew and bushing. Two rods are required on splitters over 8 inches. Manual volume control dampers shall be operated by locking-type quadrant operators. Dampers and splitters shall be 2 gauges heavier than the duct in which installed. Unless otherwise indicated, multileaf dampers shall be opposed blade type with maximum blade width of 12 inches. Access doors or panels shall be provided for all concealed damper operators and locking setscrews. Unless otherwise indicated, the locking-type quadrant operators for dampers, when installed on ducts to be thermally insulated, shall be provided with stand-off mounting brackets, bases, or adapters to provide clearance between the duct surface and the operator not less than the thickness of the insulation. Stand-off mounting items shall be integral with the operator or standard accessory of the damper manufacturer. Volume dampers shall be provided where indicated on the Drawings and in this Specification. In addition to locations indicated on the Drawings, provide volume dampers at each supply and return main from trunk and at all sub-branches. Provide damper at each tap serving a diffuser. Locate damper as far as possible from air outlets. Coordinate access to all

dampers or provide remote damper actuator to allow for balancing after ceiling installation.

2.9.2.4 Air Deflectors and Branch Connections

Air deflectors shall be provided at duct mounted supply outlets, at takeoff or extension collars to supply outlets, at duct branch takeoff connections, and at 90 degree elbows, as well as at locations as indicated on the drawings or otherwise specified. Conical branch connections or 45 degree entry connections may be used in lieu of deflectors or extractors for branch connections. All air deflectors, except those installed in 90 degree elbows, shall be provided with an approved means of adjustment. Adjustment shall be made from easily accessible means inside the duct or from an adjustment with sturdy lock on the face of the duct. When installed on ducts to be thermally insulated, external adjustments shall be provided with stand-off mounting brackets, integral with the adjustment device, to provide clearance between the duct surface and the adjustment device not less than the thickness of the thermal insulation. Air deflectors shall be factory-fabricated units consisting of curved turning vanes or louver blades designed to provide uniform air distribution and change of direction with minimum turbulence or pressure loss. Air deflectors shall be factory or field assembled. Blade air deflectors, also called blade air extractors, shall be approved factory fabricated units consisting of equalizing grid and adjustable blade and lock. Adjustment shall be easily made from the face of the diffuser or by position adjustment and lock external to the duct. Stand-off brackets shall be provided on insulated ducts and are described herein. Fixed air deflectors, also called turning vanes, shall be provided in all 90 degree elbows, and shall be double deflection type.

2.9.3 Duct Sleeves, Framed Prepared Openings, Closure Collars

2.9.3.1 Duct Sleeves

Duct sleeves shall be provided for round ducts 15 inches in diameter or less passing through floors, walls, ceilings, or roof, and installed during construction of the floor, wall, ceiling, or roof. Round ducts larger than 15 inches in diameter and square, rectangular, and oval ducts passing through floors, walls, ceilings, or roof shall be installed through framed prepared openings. The Contractor shall be responsible for the proper size and location of sleeves and prepared openings. Sleeves and framed openings are also required where grilles, registers, and diffusers are installed at the openings. Framed prepared openings shall be fabricated from 20 gauge galvanized steel, unless otherwise indicated. Where sleeves are installed in bearing walls or partitions, black steel pipe, ASTM A 53, Schedule 20 shall be used. Sleeve shall provide 1 inch clearance between the duct and the sleeve or 1 inch clearance between the insulation and the sleeve for insulated ducts.

2.9.3.2 Framed Prepared Openings

Openings shall have 1 inch clearance between the duct and the opening or 1 inch clearance between the insulation and the opening for insulated ducts.

2.9.3.3 Closure Collars

Collars shall be fabricated of galvanized sheet metal not less than 4 inches wide, unless otherwise indicated, and shall be installed on exposed ducts on each side of walls or floors where sleeves or prepared openings are provided. Collars shall be installed tight against surfaces. Collars shall fit snugly around the duct or insulation. Sharp edges of the collar around insulated duct shall be ground smooth to preclude tearing or puncturing the insulation covering or vapor barrier. Collars for round ducts 15 inches in diameter or less shall be fabricated from 20 gauge galvanized steel. Collars for round ducts larger than 15 inches and square, and rectangular ducts shall be fabricated from 18 gaugegalvanized steel. Collars shall be installed with fasteners on maximum 6 inch centers, except that not less than 4 fasteners shall be used.

2.9.4 Sound Attenuation Equipment

a. Sound Attenuators

Sound attenuators shall be provided only where stated. Factory fabricated sound attenuators shall be constructed of galvanized steel sheets. Outer casing shall be not less than 22 gauge. Acoustical fill shall be fibrous glass. Net sound reduction shall be as stated. Values shall be obtained on a test unit not less than 24 inches by 24 inches outside dimensions made by a certified nationally recognized independent acoustical laboratory. Air flow capacity shall be as stated or required. Pressure drop through the attenuator shall not exceed the value indicated, or shall not be in excess of 15 percent of the total external static pressure of the air handling system, whichever is less. Sound attenuators shall be acoustically tested with metal duct inlet and outlet sections while under the rated air flow conditions. Noise reduction data shall include the effects of flanking paths and vibration transmission. Sound attenuators shall be constructed to be airtight when operating at the internal static pressure indicated or specified for the duct system, but in no case less than 2 inch water gauge.

b. Acoustical Duct Liner:

Acoustical duct lining shall be fibrous glass designed exclusively for lining ductwork and shall conform to the requirements of ASTM C 1071, Type I and II. Liner composition may be uniform density, graduated density, or dual density, as standard with the manufacturer. Lining shall be coated, not less than 1 inch thick. Where acoustical duct liner is used, liner or combination of liner and insulation applied to the exterior of the ductwork shall be the thermal equivalent of the insulation specified in Section 15080 THERMAL INSULATION FOR MECHANICAL SYSTEMS. Duct sizes shown shall be increased to compensate for the thickness of the lining used. In lieu of sheet metal duct with field-applied acoustical lining, acoustically equivalent lengths of fibrous glass duct or factory fabricated double-walled internally insulated duct with perforated liner may be provided. Net

insertion loss value, static pressure drop, and air flow velocity capacity data shall be certified by a nationally recognized independent acoustical laboratory.

The following items shall be acoustically lined. Where distances of lining are stated, the intent is that all ductwork in any direction be acoustically lined:

1. Rectangular ductwork downstream of terminal units a minimum distance of ten feet.

2. Built-up casings and plenums, except that lining shall be 2 inches thick.

3. All conditioned air rectangular supply ductwork within mechanical equipment room. If the distance from the fan discharge to shaft inlet or mechanical room wall is less than 25 feet continue acoustical lining to a distance of 25 feet from fan discharge.

4. Upstream of return fans and exhaust fans, a minimum distance of 20 feet (except chemical storage room).

5. Downstream from exhaust fans a minimum of ten feet if the discharge of the exhaust fan runs through occupied spaces.

6. Where shown on Drawings.

2.9.5 Diffusers, Registers, and Grilles

Units shall be factory-fabricated of steel, corrosion-resistant steel, aluminum, or engineered polymer as scheduled on the Drawings. Type 304 stainless steel may be substituted in lieu of engineered polymer. Diffusers, registers, and grilles shall distribute the specified quantity of air evenly over space intended without causing noticeable drafts, air movement faster than 50 fpm in occupied zone, or dead spots anywhere in the conditioned area. Outlets for diffusion, spread, throw, and noise level shall be as required for specified performance. Performance shall be certified according to ASHRAE 70. Inlets and outlets shall be sound rated and certified according to ASHRAE 70. Sound power level shall be as indicated. Diffusers and registers shall be provided with volume damper with accessible operator constructed from the same material as the diffuser, register, or grille, unless otherwise indicated; or if standard with the manufacturer, an automatically controlled device will be acceptable. Volume dampers shall be opposed blade type for all diffusers and registers, except linear slot diffusers. Linear slot diffusers shall be provided with round or elliptical balancing dampers. Where the inlet and outlet openings are located less than 7 feet above the floor, they shall be protected by a grille or screen according to NFPA 90A.

2.9.5.1 Diffusers

Diffuser types shall be as indicated. Ceiling mounted units shall be furnished with anti-smudge devices, unless the diffuser unit minimizes ceiling smudging through design features. Diffusers shall be provided with

air deflectors of the type indicated. Air handling troffers or combination light and ceiling diffusers shall conform to the requirements of UL Elec Const Dir for the interchangeable use as cooled or heated air supply diffusers or return air units. Ceiling mounted units shall be installed with rims tight against ceiling. Sponge rubber gaskets shall be provided between ceiling and surface mounted diffusers for air leakage control. Suitable trim shall be provided for flush mounted diffusers. Duct collar connecting the duct to diffuser shall be airtight and shall not interfere with volume controller. Return or exhaust units shall be similar to supply diffusers.

2.9.5.2 Registers and Grilles

Units shall be four-way directional-control type, except that return and exhaust registers may be fixed horizontal or vertical louver type similar in appearance to the supply register face. Registers shall be provided with sponge-rubber gasket between flanges and wall or ceiling. Wall supply registers shall be installed at least 6 inches below the ceiling unless otherwise indicated. Return and exhaust registers shall be located 6 inches above the floor unless otherwise indicated. Four-way directional control may be achieved by a grille face which can be rotated in 4 positions or by adjustment of horizontal and vertical vanes. Grilles shall be as specified for registers, without volume control damper.

2.9.6 Louvers and Blank-Off Panels

Louvers for installation in exterior walls which are associated with the air supply and distribution system shall be as specified in Section 10200 METAL WALL LOUVERS.

Blank-off panels: Provide safing consisting of 2 in. rigid insulation on an aluminum panel for all unused portions of any louver. Blank-off panel shall be installed on the indoor side of the louver with the aluminum panel facing the outdoors. All louvers are shown on the architectural drawings and the contractor shall review architectural drawings to determine actual louver areas sizes and locations. Blank-off panels shall be painted flat black.

2.9.7 Air Vents, Penthouses, and Goosenecks

Air vents, penthouses, and goosenecks shall be fabricated from aluminum sheets with aluminum structural shapes. Sheet metal thickness, reinforcement, and fabrication shall conform to SMACNA-06. Louver blades shall be accurately fitted and secured to frames. Edges of louver blades shall be folded or beaded for rigidity and baffled to exclude driving rain. Air vents, penthouses, and goosenecks shall be provided with bird screen.

2.9.8 Gravity Roof Ventilators

Gravity roof ventilators shall be constructed of heavy gauge aluminum. Hoods shall be constructed of precision formed, arched panels with interlocking seams. Bases shall be constructed so that the curb cap is 8 inches smaller than the throat size. Base height shall be 5 inches. Hood support members shall be constructed of galvanized steel and fastened so

that the hood can be either removed completely from the base or hinged open. Birdscreens constructed of 1/2 inch galvanized steel mesh shall be mounted horizontally across the intake/discharge area of the hood. Intake units with throat widths through 42 inches shall ship assembled when throat lengths do not exceed 84 inches. Relief units with throat widths through 48 inches shall ship assembled when throat lengths do not exceed 96 inches. Units shall be provided with insect screen. The entire ventilator assembly shall be provided with a factory applied baked enamel finish, with the Contracting Officer having a minimum of 5 colors from which to choose a color from.

2.9.9 Bird Screens and Frames

Bird screens shall conform to ASTM E 437, Type I, Class 1, 2 by 2 mesh, 0.063 inch diameter aluminum wire or 0.031 inch diameter stainless steel wire. Frames shall be extruded aluminum. Bird screens shall be provided at all intakes, reliefs and louvers.

2.10 AIR SYSTEMS EQUIPMENT

2.10.1 Fans

Fans shall be tested and rated according to AMCA ANSI/AMCA 210. Fans may be connected to the motors either directly or indirectly with V-belt drive. V-belt drives shall be designed for not less than 150 percent of the connected driving capacity. Motor sheaves shall be variable pitch for 15 hp and below and fixed pitch as defined by ARI Guideline D. Variable pitch sheaves shall be selected to drive the fan at a speed which will produce the specified capacity when set at the approximate midpoint of the sheave adjustment. When fixed pitch sheaves are furnished, a replaceable sheave shall be provided when needed to achieve system air balance. Motors for V-belt drives shall be provided with adjustable rails or bases. Removable metal guards shall be provided for all exposed V-belt drives, and speed-test openings shall be provided at the center of all rotating shafts. Fans shall be provided with personnel screens or guards on both suction and supply ends, except that the screens need not be provided, unless otherwise indicated, where ducts are connected to the fan. Fan and motor assemblies shall be provided with vibration-isolation supports or mountings as indicated. Vibration-isolation units shall be standard products with published loading ratings. Each fan shall be selected to produce the capacity required at the fan static pressure indicated. Sound power level shall be as indicated. The sound power level values shall be obtained according to AMCA 300. Standard AMCA arrangement, rotation, and discharge shall be as indicated.

All such units shall be hung by means of vibration isolator hangers consisting of a steel housing or retainer incorporat-ing a steel spring and neoprene mounting. If the equipment to be mounted is not furnished with integral structural frames and external mounting lugs (both of suitable strength and rigidity), approved structural sub-base shall be installed in the field which shall support the equipment to be hung and to which shall be attached to the hangers. Diagonal hanger rod isolators shall be provided as required to limit horizontal motion to 1/4 inch maximum under fan operating conditions. All such units shall be mounted on rigid

structural platforms supported by a rigid structural frame from the structure above to captivate the equipment laterally under seismic forces.

2.10.1.1 Centrifugal Fans

Centrifugal fans shall be fully enclosed, single-width single-inlet, or double-width double-inlet, AMCA Pressure Class I, II, or III as shown in the Equipment Schedules. Impeller wheels shall be rigidly constructed, accurately balanced both statically and dynamically. Fan blades may be forward curved, backward-inclined or airfoil design in wheel sizes up to 30 inches. Fan blades for wheels over 30 inches in diameter shall be backward-inclined or airfoil design. Booster fans for exhaust dryer systems shall be the open-wheel radial type. These fans shall be suitable for conveying lint and the temperatures encountered. The fan shaft shall be provided with a heat slinger to dissipate heat buildup along the shaft. An access (service) door to facilitate maintenance shall be supplied with these fans. Fan wheels over 36 inches in diameter shall have overhung pulleys and a bearing on each side of the wheel. Fan wheels 36 inches or less in diameter may have one or more extra long bearings between the fan wheel and the drive. Bearings shall be sleeve type, self-aligning and self-oiling with oil reservoirs, or precision self-aligning roller or ball-type with accessible grease fittings or permanently lubricated type. Grease fittings shall be connected to tubing and serviceable from a single accessible point. Bearing life shall be L50 rated at not less than 200,000 hours as defined by ABEMA Std 9 and ABEMA Std 11. Fan shafts shall be steel, accurately finished, and shall be provided with key seats and keys for impeller hubs and fan pulleys. Each fan outlet shall be of ample proportions and shall be designed for the attachment of angles and bolts for attaching flexible connections. Additional requirements for motors and starters are a share of the Motor List and specification notes pertaining to motors as part of the Drawings.

2.10.1.2 In-Line Centrifugal Fans

In-line fans shall have centrifugal backward inclined blades, stationary discharge conversion vanes, internal and external belt guards, and adjustable motor mounts. Fans shall be mounted in a welded tubular casing. Air shall enter and leave the fan axially. Inlets shall be streamlined with conversion vanes to eliminate turbulence and provide smooth discharge air flow. Fan bearings and drive shafts shall be enclosed and isolated from the air stream. Fan bearings shall be sealed against dust and dirt and shall be permanently lubricated, and shall be precision self aligning ball or roller type. Bearing life shall be L50 rated at not less than 200,000 hours as defined by ABEMA Std 9 and ABEMA Std 11. Motors shall have open dripproof enclosure. Motor starters shall be magneticwith general-purpose enclosures. Additional requirements for motors and starters are a share of the Motor List and specification notes pertaining to motors as part of the Drawings.

2.10.1.3 Vane Axial Fans (Variable Pitch)

1. Furnish and install the required axivane fans where shown on the drawings and of the capacities and types as indicated in the Fan Schedule.

2. Fan housing shall be hot rolled steel ASTM A 283 with a minimum 3/16 inch thickness with 1/4 inch end flanges on fans up to 38 inch I.D.; 1/4 inch thickness with 3/8 inch end flanges on 42-1/4 inch I.D. and larger. End flanges shall be continuously welded around the entire periphery of fan housing and shall be provided with bolt holes for bolting to inlet bell, cones, companion flanges or duct, etc. Housing shall be continuously welded and shall be expanded by mechanical means to insure concentricity. Housing shall be shot blasted or sand blasted to relieve welding stress and insure good paint adherence inside and outside. Not less than eight (8) stationary guide vanes of 3/16 inch thickness shall be welded inside the fan housing. The motor support plate shall be 3/4 inch plate steel and welded to fan housing by means of motor support ring and vanes. Motor support ring shall be not less than 1/4 inch on hub sizes 17 inch and under, not less than 3/8 inch on hub sizes 21 inch and larger. Support ring shall be continuously welded to motor support plate.

3. Fan rotor must be on inlet side of fan to facilitate access for fan blade adjustment and/or service. Fan rotor hub and blades shall be of cast aluminum construction. Hub to be cast of #356-T6 Aluminum Alloy, heat-treated, and blades shall be cast #356 Aluminum Alloy. Fan blades shall be airfoil shaped for maximum efficiency and shall vary in twist and width from hub to tip to obtain equal air distribution along with blade length. Blade tip clearance to fan housing shall not exceed 0.05 inch for 36 inch or smaller fan rotor and 0/10 inch for all other sizes.

4. The blades in the controllable pitch hub shall be controlled by a position locking manual gear operated handwheel.

5. Fan manufacturer shall instruct this trade in procedures to be followed during storage and prestart up (layup) periods such as hand rotation every 30 days to prevent bearing flat spots. He shall through his factory representative perform prestart up inspection for lubrication and proper access for maintenance. Signed records shall be submitted as part of the operating instructions.

6. Axivane Fans shall be direct motor driven as indicated on the drawings and/or Fan Schedule as follows:

   a. Direct Driven Axivane Fans shall be Arrangement No. 4 with motor inside the fan housing and fan rotor assembly attached directly to motor shaft, properly keyed and secured by means of a ball bearing locknut and washer for a positive locking method of securing rotor to fan shaft. The motor is to be located downstream from the fan wheel.

   b. The fan rotor shall be whirl tested to 125% of operating speed and shall be statically and dynamically balanced on the fan motor shaft to a maximum tolerance guaranteed in writing, of one (1) mil double amplitude at design operating speed. In lieu of whirl test

- manufacturer may provide documented results of X-Ray Test.

c. Motor shall be equipped with ball bearings AFBMA "pp" with B-10 life and Class "F" insulation using thermo setting insulating varnish fortified with water repelling silicone. Motors shall be rated for 55°C rise over 40°C Ambient, and shall be capable of operation at 95°C. rise. External copper grease leads for lubrication of motor bearings, and to relieve excess grease pressure shall be provided by the fan manufacturer. Motors shall be capable of operating at the voltages specified on the schedules.

d. Fan motors shall be NEMA Standard Totally Enclosed-Air Over ITEAO), squirrel cage induction, single speed, single winding, continuous duty, variable torque and suitable for operation in either vertical, horizontal or angular position. Open, drip-proof motors in the air stream will not be permitted. To minimize obstruction to air flow and to allow motors to be replaced without realignment, all motors are to be "C" Face, flange mounted type with the flange recessed into a machined motor support plate. Motor frame sizes shall be selected to deliver nominal horsepower at a maximum air-over velocity of 500 FPM. Motors shall be high efficiency type, similar to Reliance VAV type motors.

e. A conduit box shall be mounted on the exterior of fan casing and lead wires from the motor conduit box shall be protected from the airstream by being encased in an airtight metal conduit pipe.

f. Brake horsepowers as shown in schedule shall not be exceeded.

7. Inlet bells shall be provided for Axivane fans.

8. All Axivane Fans shall be provided with supports for horizontal or vertical mounting where required. Horizontal fan floor supports shall be provided by the fan manufacturer and shall be bolted to the inlet and discharge flanges of the fan. Supports for fans 48" diameter and larger shall be cross-braced to prevent misalignment and add structural rigidity. Supports shall be constructed of the following gauges of carbon steel: 3/16" for fans up to 38" diameter, 1/4" for fans 42-1/4" diameter and larger. Horizontal ceiling supports shall consist of clips welded to the fan casing for field furnished support rods. Companion flanges shall be of the same thickness as the fan flanges where indicated on plans.

9. The manufacturer shall furnish published performance curves, and such data is to be based on tests in accordance with AMCA Standard 210-74. The curves shall be drawn with the fan flow rate plotted against fan total pressure and fan brakehorsepower per section 10.2.1 of Standard 210-74. The total pressure plotted is to be the difference between the total pressure at the fan outlet defined as plane 2, and the total pressure at the fan inlet defined as plane 1 in AMCA Standard 210-74. Manufacturers submitting performance data not in full accordance with the requirements of this paragraph will be required, prior to approval, to perform a witnessed AMCA performance test on one of each fan/motor size

specified. The full cost of such tests, including the time and expense of the observers, shall be paid for by the fan manufacturer.

10. The fan manufacturer shall furnish published sound power level data based on actual test on the fan sizes being furnished, and conducted in accordance with current AMCA standards. Such data is to define Sound Power Levels (PWL), re: 10-12 watts for each of the eight (8) frequency bands. Manufacturers furnishing estimated data will not be approved.

2.10.1.4 Panel Type Power Wall Ventilators

Fans shall be propeller type, assembled on a reinforced metal panel with venturi opening spun into panel. Fans with wheels less than 24 inches diameter shall be direct or V-belt driven and fans with wheels 24 inches diameter and larger shall be V-belt drive type. Fans shall be furnished with wall mounting collar. Lubricated bearings shall be provided. Fans shall be fitted with wheel and motor side metal or wire guards which have a corrosion-resistant finish. Motor enclosure shall be dripproof type. Motor operated backdraft dampers shall be provided where indicated.

2.10.2 Coils

Coils shall be fin-and-tube type constructed of seamless copper tubes and copper fins mechanically bonded or soldered to the tubes. Copper tube wall thickness shall be a minimum of 0.020 inches. Copper fins shall be 0.0045 inch minimum thickness. Casing and tube support sheets shall be not lighter than 16 gauge galvanized steel, formed to provide structural strength. When required, multiple tube supports shall be provided to prevent tube sag. Each coil shall be tested at the factory under water at not less than 400 psi air pressure and shall be suitable for 200 psi working pressure. Coils shall be mounted for counterflow service. Coils shall be rated and certified according to ARI ANSI/ARI 410.

2.10.2.1 Water Coils

Water coils shall be installed with a pitch of not less than 1/8 inch per foot of the tube length toward the drain end. Headers shall be constructed of cast iron, welded steel or copper. Each coil shall be provided with a plugged vent and drain connection extending through the unit casing.

2.10.2.2 Steam Preheat (Nonfreeze) Coils

Steam (nonfreeze) coils shall be steam-distribution-tube type with condensing tubes not less than 1 inch outside diameter for tube lengths 60 inches and over and 1/2 inch outside diameter for tube lengths under 60 inches. Headers shall be constructed of cast iron, welded steel, or copper. Distribution tubes shall be not less than 5/8 inch outside diameter for tube lengths 60 inches and over and 3/8 inch outside diameter for tube lengths under 60 incheswith orifices to discharge steam to condensing tubes. Distribution tubes shall be installed concentric inside of condensing tubes and shall be held securely in alignment. Maximum length of a single coil shall be limited to 144 inches. Coils

shall be factory tested to ensure that, when supplied with a uniform face velocity, temperature across the leaving side will be uniform with a maximum variation of no more than 5 percent.

2.10.3 Air Filters

Air filters shall be listed according to requirements of UL 900, except high efficiency particulate air filters of 99.97 percent efficiency by the DOP Test method shall be as listed under the Label Service and shall meet the requirements of UL 586.

2.10.3.1 Extended Surface Pleated Panel Filters

Filters shall be 2 inch depth, sectional, disposable type of the size indicated and shall have an average efficiency of 25 to 30 percent when tested according to ASHRAE 52.1. Initial resistance at 500 feet per minute shall not exceed 0.36 inches water gauge. Filters shall be UL Class 2. Media shall be nonwoven cotton and synthetic fiber mat. A wire support grid bonded to the media shall be attached to a moisture resistant fiberboard frame. All four edges of the filter media shall be bonded to the inside of the frame to prevent air bypass and increase rigidity.

These filters shall be provided where shown and as prefilters for all air-handling units.

2.10.3.2 Cartridge Type Pocket Filters

Filters shall be 12 inch depth, sectional, replaceable dry media type of the size indicated and shall have an average efficiency of 80 to 85 percent when tested according to ASHRAE 52.1. Initial resistance at 500 feet per minute shall not exceed 0.50 inches water gauge. Filters shall be UL Class 1. Media shall be fibrous glass, supported in the air stream by a wire or non-woven synthetic backing and secured to a galvanized steel metal header. Each filter shall be installed with an extended surface pleated panel filter as a prefilter in a factory preassembled, side access housing or a factory-made sectional frame bank, as indicated.

These filters shall be provided where shown and as secondary filters for all air-handling units.

2.10.3.3 Holding Frames

Frames shall be fabricated from not lighter than 16 gauge sheet steel with rust-inhibitor coating. Each holding frame shall be equipped with suitable filter holding devices. Holding frame seats shall be gasketed. All joints shall be airtight.

2.10.3.4 Filter Gauges

Filter gauges shall be dial type, diaphragm actuated draft and shall be provided for all filter stations, including those filters which are furnished as integral parts of factory fabricated air handling units. Gauges shall be at least 3-7/8 inches in diameter, shall have white dials with black figures, and shall be graduated in 0.01 inch, and shall have a

minimum range of 1 inch beyond the specified final resistance for the filter bank on which each gauge is applied. Each gauge shall incorporate a screw operated zero adjustment and shall be furnished complete with two static pressure tips with integral compression fittings, two molded plastic vent valves, two 5 foot minimum lengths of 1/4 inch diameter aluminum tubing, and all hardware and accessories for gauge mounting.

Where two filters are used in series, filter gauges shall be provided separately for each filter.

2.11 AIR HANDLING UNITS

2.11.1 Factory-Fabricated Air Handling Units

Units shall be single-zone draw-through type. Units shall include fans, coils, airtight insulated casing, 30% prefilters, 85% secondary filter sections, adjustable V-belt drives, belt guards for externally mounted motors, access sections between heating and cooling coils, steam preheat coils, chilled water cooling coils, vibration-isolators, and appurtenances required for specified operation. Vibration isolators shall be as indicated. Each air handling unit shall have physical dimensions suitable to fit space allotted to the unit and shall have the capacity indicated. Air handling unit shall have published ratings based on tests performed according to ARI ANSI/ARI 430.

2.11.1.1 Casings

Casing sections shall be 2 inch double wall type constructed of a minimum 18 gauge galvanized steel, or 18 gauge steel outer casing protected with a corrosion resistant paint finish according to paragraph FACTORY PAINTING. Inner casing shall be minimum 20 gauge solid galvanized steel. Casing shall be designed and constructed with an integral structural steel frame such that exterior panels are non-load bearing. Exterior panels shall be individually removable. Removal shall not affect the structural integrity of the unit. Casings shall be provided with inspection doors, access sections, and access doors as indicated. Inspection and access doors shall be insulated, fully gasketed, double-wall type, of a minimum 18 gauge outer and 20 gauge inner panels. Doors shall be rigid and provided with heavy duty hinges and latches. Inspection doors shall be a minimum 12 inches wide by 12 inches high. Access doors shall be minimum 24 inches wide and shall be the full height of the unit casing or a minimum of 6 ft., whichever is less. A minimum 8 inches by 8 inches sealed glass window suitable for the intended application shall be installed in all access doors. Access Sections shall be according to paragraph AIR HANDLING UNITS. Drain pan shall be double-bottom type constructed of 16 gauge stainless steel, pitched in both directions to the drain connection. Drain pans shall be constructed water tight, treated to prevent corrosion, and designed for positive condensate drainage. When 2 or more cooling coils are used, with one stacked above the other, condensate from the upper coils shall not flow across the face of lower coils. Intermediate drain pans or condensate collection channels and downspouts shall be provided, as required to carry condensate to the unit drain pan out of the air stream and without moisture carryover. Each casing section handling conditioned air shall be insulated with not less than 1 inch thick, 1-1/2 pound

density coated fibrous glass material having a thermal conductivity not greater than 0.23 Btu/hr-sf-F. Factory applied fibrous glass insulation shall conform to ASTM C 1071, except that the minimum thickness and density requirements do not apply, and shall meet the requirements of NFPA 90A. Foam-type insulation is not acceptable. Foil-faced insulation shall not be an acceptable substitute for use on double-wall access doors and inspections doors and casing sections. Duct liner material, coating, and adhesive shall conform to fire-hazard requirements specified in Section 15080 THERMAL INSULATION FOR MECHANICAL SYSTEMS. A latched and hinged inspection door, shall be provided in the fan and coil sections. Additional inspection doors, access doors and access sections shall be provided where indicated.

2.11.1.2 Heating and Cooling Coils

Coils shall be provided as specified in paragraph AIR SYSTEMS EQUIPMENT, for types indicated.

2.11.1.3 Air Filters

Air filters shall be as specified in paragraph AIR FILTERS for types and thickness indicated.

2.11.1.4 Fans

Fans shall be double-inlet, centrifugal type with each fan in a separate scroll. Fans and shafts shall be dynamically balanced prior to installation into air handling unit, then the entire fan assembly shall be statically and dynamically balanced at the factory after it has been installed in the air handling unit. Fans shall be mounted on steel shafts accurately ground and finished. Fan bearings shall be sealed against dust and dirt and shall be precision self-aligning ball or roller type. Bearing life shall be L50 rated at not less than 200,000 hours as defined by ABEMA Std 9 and ABEMA Std 11. Bearings shall be permanently lubricated or lubricated type with lubrication fittings readily accessible at the drive side of the unit. Bearings shall be supported by structural shapes, or die formed sheet structural members, or support plates securely attached to the unit casing. Bearings may not be fastened directly to the unit sheet metal casing. Fans and scrolls shall be furnished with coating indicated. Fans shall be driven by a unit-mounted or a floor-mounted motor connected to fans by V-belt drive complete with belt guard for externally mounted motors. Belt guards shall be the three sided enclosed type with solid or expanded metal face. Belt drives shall be designed for not less than a 1.3 service factor based on motor nameplate rating. Motor sheaves shall be variable pitch for 25 hp and below and fixed pitch above 25 hp as defined by ARI Guideline D. Where fixed sheaves are required, variable pitch sheaves may be used during air balance, but shall be replaced with an appropriate fixed sheave after air balance is completed. Variable pitch sheaves shall be selected to drive the fan at a speed that will produce the specified capacity when set at the approximate midpoint of the sheave adjustment. Motors for V-belt drives shall be provided with adjustable bases. Fan motors shall have totally enclosed enclosures. Motor starters shall be magnetic type with general-purpose enclosure. Additional requirements for motors and starters are shown on the Motor List and

specification notes pertaining to motors on the Drawings. Unit fan or fans shall be selected to produce the required capacity at the fan static pressure. Sound power level shall be as indicated. The sound power level values shall be obtained according to AMCA 300 or ASHRAE ANSI/ASHRAE 68. Fan and motor assembly shall be mounted on minimum 2 inch deflection vibration isolation.

2.11.1.5 Access Sections and Filter/Mixing Boxes

Access sections shall be provided between heating and cooling coils and shall be furnished with access doors as shown. Access sections and filter/mixing boxes shall be constructed in a manner identical to the remainder of the unit casing and shall be equipped with access doors.

2.11.1.6 Dampers

Dampers shall be as specified in paragraph CONTROLS.

2.12 TERMINAL UNITS

2.12.1 Room Fan-Coil Units

Base units shall include galvanized coil casing, coil assembly drain pan air filter, fans, motor, fan drive, and motor switch, plus an enclosure for cabinet models and casing for concealed models. Leveling devices integral with the unit shall be provided for vertical type units. Sound power levels shall be as indicated. Sound power level data or values for these units shall be obtained according to test procedures based on ARI 350. Sound power values apply to units provided with factory fabricated cabinet enclosures and standard grilles. Values obtained for the standard cabinet models will be acceptable for concealed models without separate test provided there is no variation between models as to the coil configuration, blowers, motor speeds, or relative arrangement of parts. Automatic valves and controls shall be provided as specified in paragraph CONTROLS. Each unit shall be fastened securely to the building structure. Capacity of the units shall be as indicated. Room fan-coil units shall be certified as complying with ARI ANSI/ARI 440, and shall meet the requirements of UL 1995.

2.12.1.1 Enclosures

Enclosures shall be fabricated of not lighter than 18 gaugesteel, reinforced and braced. Enclosures shall be factory-painted in a color as selected by the Contracting Officer. Front panels of enclosures shall be removable and provided with 1/2 inch thick dual density fibrous glass insulation. The exposed side shall be high density, erosion-proof material suitable for use in air streams with velocities up to 4,500 fpm. Discharge grille shall be adjustable and shall be of such design as to properly distribute air throughout the conditioned space. Plastic discharge and return grilles are acceptable provided the plastic material is certified by the manufacturer to be classified as flame resistant according to UL 94 and the material shall comply with the heat deflection criteria specified in UL 1995. Ferrous metal surfaces shall be galvanized or factory finished with corrosion resistant enamel. Access doors or removable panels shall be provided for piping and control compartments.

Duct discharge collar shall be provided for concealed models. Enclosures shall have easy access for filter replacement.

2.12.1.2 Fans

Fans shall be galvanized steel or aluminum, multiblade, centrifugal type. In lieu of metal, fans and scrolls may be non-metallic materials of suitably reinforced compounds. Fans shall be dynamically and statically balanced. Surfaces shall be smooth. Assemblies shall be accessible for maintenance. Disassembly and re-assembly shall be by means of mechanical fastening devices and not by epoxies or cements.

2.12.1.3 Coils

Coils shall be constructed of not less than 3/8 inch outside diameter seamless copper tubing, with copper or aluminum fins mechanically bonded or soldered to the tubes. Coils shall be provided with not less than 1/2 inch outside diameter flare or sweat connectors, accessory piping package with thermal connections suitable for connection to the type of control valve supplied, and manual air vent. Coils shall be provided with isolation valves. Coils shall be tested hydrostatically at 300 psi or under water at 250 psi air pressure and suitable for 200 psi working pressure. Provisions shall be made for coil removal.

2.12.1.4 Drain Pans

Drain and drip pans shall be sized and located to collect all water condensed on and dripping from any item within the unit enclosure or casing. Drain pans shall be constructed of stainless steel, thermally insulated to prevent condensation. Drain pans shall extend to cover valves installed inside the casing. Insulation shall have a flame spread rating not over 25 without evidence of continued progressive combustion, a smoke developed rating no higher than 50, and shall be of a waterproof type or coated with a waterproofing material. In lieu of the above, drain pans may be constructed of die-formed 22 gauge steel, formed from a single sheet, galvanized after fabrication, insulated and coated as specified for the 21 gauge material or of die-formed 21 gauge type 304 stainless steel, insulated as specified above. Drain pans shall be pitched to drain. Minimum 3/4 inch NPT or 5/8 inch OD drain connection shall be provided in drain pan. Auxiliary drain pans to catch drips from control and piping packages, eliminating insulation of the packages, may be plastic; if metal, the auxiliary pans shall comply with the requirements specified above. Insulation at control and piping connections thereto shall extend 1 inch minimum over the auxiliary drain pan.

2.12.1.5 Filters

Filters shall be of the fiberglass disposable type, 1 inch thick, conforming to CID A-A-1419. Filters in each unit shall be removable without the use of tools.

2.12.1.6 Motors

Motors shall be of the permanent split-capacitor type with built-in thermal

overload protection, directly connected to unit fans. Motor switch shall be three speeds and off, manually operated, and shall be mounted on an identified plate inside the unit below or behind an access door. In lieu of the above fan speed control, a solid-state variable-speed controller having a minimum speed reduction of 50 percent may be provided. Motors shall have permanently-lubricated or oilable sleeve-type or combination ball and sleeve-type bearings with vibration isolating mountings suitable for continuous duty. Motor power consumption, shown in watts, at the fan operating speed selected to meet the specified capacity shall not exceed the following values:

Unit Capacity (cfm)	Maximum Power Consumption (Watts)
200	55
300	60
400	65
600	80
800	130
1000	130
1200	130

2.12.2 Variable Air Volume (VAV) Single Duct Terminal Units

Furnish and install single duct variable volume terminals of the sizes and capacities shown on the drawings. The terminals shall be pressure independent.

At an inlet velocity of 2000 fpm, the differential static pressure for any size of terminal shall not exceed 0.10 inch wg for the basic terminal, or 0.25 wg with the attenuator added.

Performance shall be ARI certified.

The terminal inlet shall be equipped with a cross-flow shaped sensor with amplifying pressure pickup points connected to central averaging chambers. The sensor shall amplify the duct pressure by a factor of 1.75 and shall maintain control accuracy with the same inlet duct in any configuration.

The terminal casing shall be 22 gauge galvanized steel. Terminal unit casing shall be provided with rigid 4 pound density liner with Mylar or Tedlar inner liner.

The damper shall be heavy gauge metal, with its shaft rotating in self-lubricating bearings. The shaft shall be marked on the end to indicate damper position. The terminal shall be designed for field conversion from normally open to normally closed, or vice versa, without relocating the actuator or changing parts. The damper shall have a built in stop to prevent overstroking and shall seal against a closed cell foam gasket.

All terminals shall be supplied with a hot water coil. The number of rows of the coil shall be sufficient to meet the requirements of the BTU outputs shown on the drawings.

Controls for the terminal unit shall be supplied by the Automatic

Temperature Control Contractor. The controls shall be shipped to the terminal box manufacturer for installation. The terminal box manufacturer shall assume all costs for mounting the controls. If other than 24 volts is being brought to the terminal unit the terminal unit manufacturer shall supply a transformer and a disconnect for each box.

All terminal units to be provided with manufacturers 3 feet long sound attenuator with Mylar or Tedlar inner liner.

2.13 ENERGY RECOVERY DEVICES

2.13.1 Run-Around-Coil

Assembly shall be factory fabricated and tested air-to-liquid-to-air energy recovery system for transfer of sensible heat from exhaust air to supply air stream. System shall deliver an energy transfer effectiveness not less than that indicated without cross-contamination with maximum energy recovery at minimum life cycle cost. Components shall be computer optimized for capacity, effectiveness, number of coil fins per inch, number of coil rows, flow rate, heat transfer rate percent by volume of propylene glycol solution, and frost control in accordance with the Drawing Schedules. Coils shall conform to paragraph AIR HANDLING UNITS. Related pumps, and piping specialties shall conform to requirements of Section 15556 FORCED HOT WATER HEATING SYSTEMS USING WATER AND STEAM HEAT EXCHANGERS. System controls shall be as indicated in Section 15951 DIRECT DIGITAL CONTROL FOR HVAC.

2.14 FACTORY PAINTING

Units which are not of galvanized construction according to ASTM A 123 or ASTM A 924/A 924M shall be factory painted with a corrosion resisting paint finish. Internal and external ferrous metal surfaces shall be cleaned, phosphatized and coated with a paint finish which has been tested according to ASTM B 117, ASTM D 1654, and ASTM D 3359. Evidence of satisfactory paint performance for a minimum of 125 hours for units to be installed indoors and 500 hours for units to be installed outdoors shall be submitted. Rating of failure at the scribe mark shall be not less than 6, average creepage not greater than 1/8 inch. Rating of the inscribed area shall not be less than 10, no failure. On units constructed of galvanized steel which have been welded, exterior surfaces of welds or welds that have burned through from the interior shall receive a final shop docket of zinc-rich protective paint according to ASTM D 520 Type I.

PART 3 EXECUTION

3.1 INSTALLATION

Work shall be installed as shown and according to the manufacturer's diagrams and recommendations.

3.1.1 Piping

For piping, refer to Section 15562 HEATING AND UTILITIES SYSTEMS, CENTRAL

STEAM for steam piping, and Section 15650 CENTRAL REFRIGERATED AIR CONDITIONING SYSTEM for chilled water.

3.1.2 Access Panels

Access panels shall be provided for concealed valves, vents, controls, dampers, and items requiring inspection or maintenance. Access panels shall be of sufficient size and located so that the concealed items may be serviced and maintained or completely removed and replaced. Access panels shall be as specified in Section 05500 MISCELLANEOUS METALS.

3.1.3 Flexible Connectors

Pre-insulated flexible connectors and flexible duct shall be attached to other components in accordance with the latest printed instructions of the manufacturer to ensure a vapor tight joint. Hangers, when required to suspend the connectors, shall be of the type recommended by the connector or duct manufacturer and shall be provided at the intervals recommended.

3.1.4 Sleeved and Framed Openings

Space between the sleeved or framed opening and the duct or the duct insulation shall be packed as specified in Section 07840 FIRESTOPPING for fire rated penetrations. For non-fire rated penetrations, the space shall be packed as specified in Section 07900 JOINT SEALING.

3.1.5 Metal Ductwork

Installation shall be according to SMACNA-06 unless otherwise indicated. Duct supports for sheet metal ductwork shall be according to SMACNA-06, unless otherwise specified. Friction beam clamps indicated in SMACNA-06 shall not be used. Risers on high velocity ducts shall be anchored in the center of the vertical run to allow ends of riser to move due to thermal expansion. Supports on the risers shall allow free vertical movement of the duct. Supports shall be attached only to structural framing members and concrete slabs. Supports shall not be anchored to metal decking unless a means is provided and approved for preventing the anchor from puncturing the metal decking. Where supports are required between structural framing members, suitable intermediate metal framing shall be provided. Where C-clamps are used, retainer clips shall be provided. All ductwork and plenums connect to exterior louvers shall be pitched, and provide with a 1-1/2 inch drain piped to a floor drain.

3.1.5.1 Light Duty Corrosive Exhaust Ductwork

The requirements of this paragraph shall apply to all exhaust ductwork and exposed supply ductwork serving the pool chemical storage rooms, as well as where specifically indicated on the Drawings. Light duty corrosive exhaust ductwork shall be PVC plastisol coated galvanized steel with PVC coating on interior and exterior surfaces and epoxy wash primer coating on exterior surfaces. This shall include, but not be limited to, systems associated with EF-16 and EF-25.

3.1.6 Exhaust Ductwork

3.1.6.1 Exposed Ductwork in Dry Areas

Exposed ductwork in areas not subject to moisture laden air, or not serving or passing through pool areas, shall be constructed of minimum 18 gauge type 304 or type 316 stainless steel. This shall include all exposed ductwork including storage and other areas.

3.1.6.2 Ducts Conveying Moisture Laden Air and/or Passing Through Moisture Laden Areas

The requirements of this paragraph shall apply to all exhaust ductwork from locker rooms, all return/exhaust ductwork serving or passing through pool areas, as well as other moisture laden air, and any other ductwork that passes through moisture laden areas whether or not it is run above a ceiling structure. Ducts conveying moisture laden air shall be fabricated from minimum 16 gauge, aluminum. Joints shall be continuously welded, to be liquid tight. Duct shall be pitched to drain at points indicated. Transitions to other metals shall be liquid tight, companion angle bolted and gasketed. This shall include, but not be limited to, systems associated with RF-16, RF-19, EF-8, EF-14, EF-15, EF-18, EF-23, and EF-24.

3.1.7 Acoustical Duct Lining

Lining shall be applied in cut-to-size pieces attached to the interior of the duct with nonflammable fire resistant adhesive conforming to ASTM C 916, Type I, NFPA 90A, UL 723, and ASTM E 84. Top and bottom pieces shall lap the side pieces and shall be secured with welded pins, adhered clips of metal, nylon, or high impact plastic, and speed washers or welding cup-head pins installed according to SMACNA-06. Welded pins, cup-head pins, or adhered clips shall not distort the duct, burn through, nor mar the finish or the surface of the duct. Pins and washers shall be flush with the surfaces of the duct liner and all breaks and punctures of the duct liner coating shall be sealed with the nonflammable, fire resistant adhesive. Exposed edges of the liner at the duct ends and at other joints where the lining will be subject to erosion shall be coated with a heavy brush coat of the nonflammable, fire resistant adhesive, to prevent delamination of glass fibers. Duct liner may be applied to flat sheet metal prior to forming duct through the sheet metal brake. Lining at the top and bottom surfaces of the duct shall be additionally secured by welded pins or adhered clips as specified for cut-to-size pieces. Other methods indicated in SMACNA-06 to obtain proper installation of duct liners in sheet metal ducts, including adhesives and fasteners, will be acceptable. All acoustic duct lining shall be completely covered with an inner metal liner of perforated, 22 gauge galvanized steel with 3/32 inch diameter holes on 1/4 inch centers.

3.1.8 Dust Control

To prevent the accumulation of dust, debris and foreign material during construction, temporary dust control protection shall be provided. The distribution system (supply and return) shall be protected with temporary seal-offs at all inlets and outlets at the end of each day's work. Temporary protection shall remain in place until system is ready for

startup.

3.1.9 Insulation

Thickness and application of insulation materials for ductwork, piping, and equipment shall be according to Section 15080 THERMAL INSULATION FOR MECHANICAL SYSTEMS. Outdoor air intake ducts and plenums shall be externally insulated up to the point where the outdoor air mixes with the return air stream.

3.1.10 Duct Test Holes

Holes with closures or threaded holes with plugs shall be provided in ducts and plenums as indicated or where necessary for the use of pitot tube in balancing the air system. Extensions, complete with cap or plug, shall be provided where the ducts are insulated.

3.1.11 Power Roof Ventilator Mounting

Foamed 1/2 inch thick, closed-cell, flexible elastomer insulation shall cover width of roof curb mounting flange. Where wood nailers are used, holes shall be pre-drilled for fasteners.

3.1.12 Power Transmission Components Adjustment

V-belts and sheaves shall be tested for proper alignment and tension prior to operation and after 72 hours of operation at final speed. Belts on drive side shall be uniformly loaded, not bouncing. Alignment of direct driven couplings shall be to within 50 percent of manufacturer's maximum allowable range of misalignment.

3.2 FIELD PAINTING AND PIPING IDENTIFICATION

Finish painting of items only primed at the factory or surfaces not specifically noted otherwise and identification for piping are specified in Section 09900 PAINTING, GENERAL.

3.3 NOT USED

3.4 DUCTWORK LEAK TEST

Ductwork leak test shall be performed for the entire air distribution and exhaust system, including fans, coils, filters, etc. Test procedure, apparatus, and report shall conform to SMACNA-10. The maximum allowable leakage rate is using a 3 inch tube and a 7/8 inch orifice shall be 150 cfm. Ductwork leak test shall be completed with satisfactory results prior to applying insulation to ductwork exterior.

3.5 CLEANING AND ADJUSTING

Pipes shall be cleaned free of scale and thoroughly flushed of foreign matter. A temporary bypass shall be provided for water coils to prevent flushing water from passing through coils. Strainers and valves shall be thoroughly cleaned. Prior to testing and balancing, air shall be removed

from water systems by operating the air vents. Temporary measures, such as piping the overflow from vents to a collecting vessel shall be taken to avoid water damage during the venting process. Air vents shall be plugged or capped after the system has been vented. Inside of room fan-coil units air terminal units, ducts, plenums, and casing shall be thoroughly cleaned of debris and blown free of small particles of rubbish and dust and then shall be vacuum cleaned before installing outlet faces. Equipment shall be wiped clean, with traces of oil, dust, dirt, or paint spots removed. Temporary filters shall be provided prior to startup of all fans that are operated during construction, and new filters shall be installed after all construction dirt has been removed from the building, and the ducts, plenums, casings, and other items specified have been vacuum cleaned. System shall be maintained in this clean condition until final acceptance. Bearings shall be properly lubricated with oil or grease as recommended by the manufacturer. Belts shall be tightened to proper tension. Control valves and other miscellaneous equipment requiring adjustment shall be adjusted to setting indicated or directed. Fans shall be adjusted to the speed indicated by the manufacturer to meet specified conditions.

3.6 TESTING, ADJUSTING, AND BALANCING

Testing, adjusting, and balancing shall be as specified in Section 15990 TESTING, ADJUSTING AND BALANCING OF HVAC SYSTEMS. Testing, adjusting, and balancing shall begin only when the air supply and distribution, including controls, has been completed, with the exception of performance tests.

3.7 PERFORMANCE TESTS

After testing, adjusting, and balancing has been completed as specified, each system shall be tested as a whole to see that all items perform as integral parts of the system and temperatures and conditions are evenly controlled throughout the building. Corrections and adjustments shall be made as necessary to produce the conditions indicated or specified. Capacity tests and general operating tests shall be conducted by an experienced engineer. Tests shall cover a period of not less than 10 days for each system and shall demonstrate that the entire system is functioning according to the specifications. Coincidental chart recordings shall be made at points indicated on the drawings for the duration of the time period and shall record the temperature at space thermostats or space sensors, the humidity at space humidistats or space sensors and the ambient temperature and humidity in a shaded and weather protected area.

3.8 FIELD TRAINING

The Contractor shall conduct a training course for operating and maintenance personnel as designated by the Contracting Officer. Training shall be provided for a period of 40 hours of normal working time and shall start after the system is functionally complete but prior to the performance tests. The field instruction shall cover all of the items contained in the approved Operating and Maintenance Instructions.

3.9 AIR INTAKE AND EXHAUST PLENUMS

All air intake and exhaust plenums shall be constructed of No. 16 gage

galvanized iron braced and stiffened on outside by means of 2 inch x 2 inch x 1/4 inch galvanized steel angles not to exceed 26 inch width, or with 16 gauge standing seam panels not to exceed 26 inch in width. Standing seams are to have additional right angle bend and shall be capped with No. 18 gage galvanized "U" cap over entire length of seam. All joints shall be to make them airtight. The bottom of all air chambers at the floor shall be gasketed to prevent air leakage.

Note that all casings and plenums are lined with 2" of acoustical insulation with an inner aluminum perforated liner, so as to result in double wall construction.

Plenums shall be supported on floor curbs. The bottom of all air plenums at the floor and at any other connection to masonry shall be riveted to 1-1/2 inch x 1-1/2 inch x 1/8 inch galvanized steel angles which have been secured to masonry with expansion shields and caulked tight with cement.

Provide access doors into all plenums for ease of access by maintenance personnel. Provide angles above and below access doors and frames for access doors. See "Access Doors in Sheet Metal Work" for construction of doors.

This Contractor shall be responsible for any additional bracing required for stiffness including roof deck of casings. The roof deck shall be braced and supported from the ceiling slab, if required for stiffness.

3.10 DUCTWORK CONSTRUCTION REQUIREMENTS

Duct System	SMACNA Table No.	SMACNA Pressure Classification	SMACNA Seal Classification
All supply ducts on systems with VAV terminal boxes from fan discharge to box and on all fan systems over 2" external static pressure	1-8	+6" W.G.	A
All supply ducts on systems without VAV terminal boxes and with fan systems less than or equal to 2" external static pressure, from fan discharge to diffuser, and all ductwork downstream of VAV boxes to diffusers	1-5	+2 W.G.	B
All return ducts and exhaust Ducts for fan systems less than Or equal to 1" external static pressure	1-4	-1" W.G.	B
All return ducts and exhaust	1-6	-3" W.G.	A

ducts for fan systems greater than
1" external static Pressure

-- End of Section --

SECTION 15951

DIRECT DIGITAL CONTROL FOR HVAC

PART 1 GENERAL

1.1 REFERENCES

The publications listed below form a part of this specification to the extent referenced. The publications are referred to in the text by basic designation only.

AIR MOVEMENT AND CONTROL ASSOCIATION (AMCA)

AMCA 500	(1994) Test Methods for Louvers, Dampers and Shutters

AMERICAN NATIONAL STANDARDS INSTITUTE (ANSI)

ANSI C12.1	(1995) Code for Electricity Metering

AMERICAN SOCIETY OF MECHANICAL ENGINEERS (ASME)

ASME B40.1	(1991) Gauges - Pressure Indicating Dial Type - Elastic Element

ELECTRONIC INDUSTRIES ASSOCIATION (EIA)

EIA ANSI/EIA/TIA 232-E	(1991) Interface Between Data Technical Equipment and Data Circuit-Terminating Equipment Employing Serial Binary Data Interchange

INSTITUTE OF ELECTRICAL AND ELECTRONICS ENGINEERS (IEEE)

IEEE C62.41	(1991; R 1995) Surge Voltages in Low-Voltage AC Power Circuits
IEEE Std 142	(1991) IEEE Recommended Practice for Grounding of Industrial and Commercial Power Systems

NATIONAL ELECTRICAL MANUFACTURERS ASSOCIATION (NEMA)

NEMA 250	(1991) Enclosures for Electrical Equipment (1000 Volts Maximum)
NEMA ICS 1	(1993) Industrial Control and Systems
NEMA ST 1	(1988) Specialty Transformers (Except General-Purpose Type)

NATIONAL FIRE PROTECTION ASSOCIATION (NFPA)

NFPA 70	(1996; Errata 96-4) National Electrical Code
NFPA 90A	(1996) Installation of Air Conditioning and Ventilating Systems

UNDERWRITERS LABORATORIES (UL)

UL 508	(1993; Rev thru Oct 1997) Industrial Control Equipment
UL 555S	(1996) Leakage Rated Dampers for Use in Smoke Control Systems

1.2 GENERAL REQUIREMENTS

The direct digital control (DDC) shall be a complete system suitable for the heating, ventilating and air-conditioning (HVAC) system.

1.2.1 Contract

This Contractor shall engage Williams Electric as sole source supply for DDC-Mr. Harvey Williams at phone (904) 862-1171 to estimate the "sub-contract" portion of the work. The cost to Williams shall be part of the Bid Price of Contractor.

1.2.2 EMCS Interphasing

The Contractor shall set aside a sum necessary to wire from the terminal strip of the control cabinet to adjacent MUX panels and to existing Building Maintenance System (BMS) located in the power plant. Final wiring of HVAC control panel to BMS shall be by Williams Electric Company, Inc., of Fort Walton Beach, FL 32459. The Contractor shall contact Mr. Harvey Williams of Williams Electric at (904) 862-1171 to establish the set aside cost of the connections and interface with BMS. The cost provided by Williams Electric shall be included in the bid submitted.

1.2.3 Nameplates, Lens Caps, and Tags

Nameplates and lens caps bearing legends as shown and tags bearing device-unique identifiers as shown shall have engraved or stamped characters. A plastic or metal tag shall be mechanically attached directly to each device or attached by a metal chain or wire. Each airflow measurement station shall have a tag showing flow rate range for signal output range, duct size, and identifier as shown.

1.2.4 Verification of Dimensions

After becoming familiar with all details of the work, the Contractor shall verify all dimensions in the field, and shall advise the Contracting Officer of any discrepancy before performing any work.

1.2.5 Drawings

Because of the small scale of the drawings, it is not possible to indicate all offsets, fittings, and accessories that may be required. The Contractor shall carefully investigate the mechanical, electrical, and finish conditions that could affect the work to be performed, shall arrange such work accordingly, and shall furnish all work necessary to meet such conditions.

1.2.6 Power-Line Surge Protection

Equipment connected to ac circuits shall be protected from power-line surges. Equipment protection shall meet the requirements of IEEE C62.41. Fuses shall not be used for surge protection.

1.2.7 Surge Protection for Transmitter and Control Wiring

DDC system control-panel equipment shall be protected against surges induced on control and transmitter wiring installed outside and as shown. The equipment protection shall be tested in the normal mode and in the common mode, using the following two waveforms:

a. A 10-microsecond by 1,000-microsecond waveform with a peak voltage of 1,500 volts and a peak current of 60 amperes.

b. An eight microsecond by 20-microsecond waveform with a peak voltage of 1,000 volts and a peak current of 500 amperes.

1.2.8 System Overall Reliability Requirement

The system shall be configured and installed to yield a mean time between failure (MTBF) of at least 40,000 hours. Each DDC controller shall be designed, configured, installed and programmed to provide for stand alone operation with minimal performance degradation on failure of other system components to which it is connected or with which it communicates.

1.2.9 DDC System Network Accessibility

Where the systems to be controlled by the DDC system are located in multiple mechanical rooms, each mechanical room shall have at least one communication port for the portable workstation/tester. DDC controllers shall be located in the same room as the equipment being controlled or in an adjacent space which has direct access to the equipment room.

1.2.10 System Accuracy and Display

The system shall maintain an end-to-end accuracy for one year from sensor to operator's console display for the applications specified and shall display the value as specified. Each temperature shall be displayed and printed to nearest 0.1 degree F.

1.2.10.1 Space Temperature

Space temperature with a range of 50 to 85 degrees F plus or minus 0.75 degree F for conditioned space; 30 to 130 degrees F plus or minus 1 degree F for unconditioned space.

1.2.10.2 Duct Temperature

Duct temperature with a range of 40 to 140 degrees F plus or minus 2 degrees F.

1.2.10.3 Outside Air Temperature

Outside air (OA) temperature with a range of minus 30 to plus 130 degrees F plus or minus 2 degrees F; with a subrange of 30 to 100 degrees F plus or minus 1 degree F.

1.2.10.4 Water Temperature

Water temperature with a range of 30 to 100 degrees F plus or minus 0.75 degree F; the range of 100 to 250 degrees F plus or minus 2 degrees F; and water temperatures for the purpose of performing Btu calculations using differential temperatures to plus or minus 0.5 degree F using matched sensors.

1.2.10.5 High Temperature

High temperature with a range of 200 to 500 degrees F plus or minus 2.0 degrees F.

1.2.10.6 Relative Humidity

Relative humidity, within a range of 20 to 80 percent, plus or minus 6.0 percent of range (display and print to nearest 1.0 percent).

1.2.10.7 Pressure

Pressure with a range for the specific application plus or minus 2.0 percent of range (display and print to nearest psi.)

1.2.10.8 Flow

Flow with a range for the specific application plus or minus 3.0 percent of range, and flows for the purpose of thermal calculations to plus or minus 2.0 percent of actual flow (display and print to nearest unit, such as gallons per minute).

1.2.10.9 KWh and kW Demand

KWh and kW demand with a range for the specific application plus or minus 1.0 percent of reading (display and print to nearest kWh or kW).

1.2.10.10 Analog Value Input

An analog value input to the system's equipment via an AI with a maximum error of 0.50 percent of range, not including the sensor or transmitter

error. This accuracy shall be maintained over the specified environmental conditions.

1.3 SUBMITTALS

Government approval is required for submittals with a "GA" designation; submittals having an "FIO" designation are for information only. The following shall be submitted in accordance with Section 01330 SUBMITTAL PROCEDURES:

SD-01 Data

Equipment Compliance Booklet; FIO.

The HVAC Control System Equipment Compliance Booklet (ECB) shall be in booklet form and indexed, with numbered tabs separating the information on each device. It shall consist of, but not be limited to, data sheets and catalog cuts which document compliance of all devices and components with the specifications. The ECB shall be indexed in alphabetical order by the unique identifiers. Devices and components which do not have unique identifiers shall follow the devices and components with unique identifiers and shall be indexed in alphabetical order according to their functional name. The ECB shall include a Bill of Materials for each HVAC Control System. The Bill of Materials shall function as the Table of Contents for the ECB and shall include the device's unique identifier, device function, manufacturer, model/part/catalog number used for ordering, and tab number where the device information is located in the ECB. The ECB shall be submitted along with Submittal SD-04, Drawings.

SD-04 Drawings

HVAC Control System; GA.

Drawings shall be on 34 by 22 inch sheets in the form and arrangement shown. The drawings shall use the same abbreviations, symbols, nomenclature and identifiers shown. Each control system element on a drawing shall have a unique identifier as shown. The HVAC Control System Drawings shall be delivered together as a complete submittal. Deviations must be approved by the Contracting Officer. Drawings shall be submitted along with Submittal SD-01, Data.

a . HVAC Control System Drawings shall include the following:

Sheet One: Drawing Index, HVAC Control System Legend.
Sheet Two: Valve Schedule, Damper Schedule.

Sheet Four: Control System Schematic and Equipment Schedule.
Sheet Five: Sequence of Operation and Data Terminal Strip Layout.
Sheet Six: Control Loop Wiring Diagrams.
Sheet Seven: Motor Starter and Relay Wiring Diagram.
Sheet Eight: Communication Network and Block Diagram.
Sheet Nine: DDC Panel Installation and Block Diagram.

(Repeat Sheets Four through Seven for each AHU System.)

b. The HVAC Control System Drawing Index shall show the name and number of the building, military site, State or other similar designation, and Country. The Drawing Index shall list HVAC Control System Drawings, including the drawing number, sheet number, drawing title, and computer filename when used. The HVAC Control System Legend shall show generic symbols and the name of devices shown on the HVAC Control System Drawings.

c. The valve schedule shall include each valve's unique identifier, size, flow coefficient Cv, pressure drop at specified flow rate, spring range, positive positioner range, actuator size, close-off pressure data, dimensions, and access and clearance requirements data. Valve schedules may be submitted in advance but shall be included in the complete submittal.

d. The compressed air station schematic diagram shall show all equipment, including: compressor with motor horsepower and voltage; starter; isolators; manual bypasses; tubing sizes; drain piping and drain traps; reducing valves; dryer; and data on manufacturer's names and model numbers, mounting, access, and clearance requirements. Air Compressor and air dryer data shall include calculations of the air consumption of all current-to-pneumatic transducers and of any other control system devices to be connected to the compressed air station, and the compressed air supply dewpoint temperature at 20 psig. Compressed air station schematic drawings shall be submitted for each compressed air station.

e. The HVAC control system schematics shall be in the form shown, and shall show all control and mechanical devices associated with the HVAC system. A system schematic drawing shall be submitted for each HVAC system.

f. The HVAC control system equipment Schedule shall be in the form shown. All devices shown on the drawings having unique identifiers shall be referenced in the equipment schedule. Information to be included in the equipment schedule shall be the control loop, device unique identifier, device function, setpoint, input range, and additional important parameters (i.e., output range). An equipment schedule shall be submitted for each HVAC system.

g. The HVAC control system sequence of operation shall reflect the language and format of this specification, and shall refer to the devices by their unique identifiers as shown. No operational deviations from specified sequences will be permitted without prior written approval of the Contracting Officer. Sequences of operation shall be submitted for each HVAC control system including each type of terminal unit control system.

h. The HVAC control system wiring diagrams shall be functional wiring diagrams which show the interconnection of conductors and cables to HVAC control panel terminal blocks and to the identified

terminals of devices, starters and package equipment. The wiring diagrams shall show necessary jumpers and ground connections. The wiring diagrams shall show the labels of all conductors. Sources of power required for HVAC control systems and for packaged equipment control systems shall be identified back to the panel board circuit breaker number, HVAC system control panel, magnetic starter, or packaged equipment control circuit. Each power supply and transformer not integral to a controller, starter, or packaged equipment shall be shown. The connected volt-ampere load and the power supply volt-ampere rating shall be shown. Wiring diagrams shall be submitted for each HVAC control system.

SD-08 Statements

Commissioning Procedures; FIO.

Three copies of the HVAC control system commissioning procedures, in booklet form and indexed, 60 days prior to the scheduled start of commissioning. Commissioning procedures shall be provided for each HVAC control system, and for each type of terminal unit control system. The Commissioning procedures shall reflect the format and language of this specification, and refer to devices by their unique identifiers as shown. The Commissioning procedures shall be specific for each HVAC system, and shall give detailed step-by-step procedures for commissioning of the system.

a. The Commissioning procedures shall include detailed, product specific set-up procedures, configuration procedures, adjustment procedures, and calibration procedures for each device. Where the detailed product specific commissioning procedures are included in manufacturer supplied manuals, reference may be made in the HVAC control system commissioning procedures to the manuals.

b. An HVAC control system commissioning procedures equipment list shall be included that lists the equipment to be used to accomplish commissioning. The list shall include manufacturer name, model number, equipment function, the date of the latest calibration, and the results of the latest calibration.

Performance Verification Test Procedures; FIO.

Three copies of the HVAC Control System Performance Verification Test Procedures, in booklet form and indexed, 60 days before the Contractor's scheduled test dates. The performance verification test procedures shall refer to the devices by their unique identifiers as shown, shall explain, step-by-step, the actions and expected results that will demonstrate that the HVAC control system performs in accordance with the sequences of operation, and other contract documents. An HVAC control system performance verification test equipment list shall be included that lists the equipment to be used during performance verification testing. The list shall include manufacturer name, model number, equipment function, the date of the latest calibration, and the results of the latest calibration.

Training Course Materials; FIO.

An outline for the HVAC control system training course with a proposed time schedule. Approval of the planned training schedule shall be obtained from the Government at least 60 days prior to the start of the training. Three copies of HVAC control system training course material 30 days prior to the scheduled start of the training course. The training course material shall include the operation manual, maintenance and repair manual, and paper copies of overheads used in the course.

SD-09 Reports

Commissioning Report; GA.

Eight copies of the HVAC Control System Commissioning Report, in booklet form and indexed, within 30 days after completion of the system commissioning. The commissioning report shall include data collected during the HVAC control system commissioning procedures and shall follow the format of the commissioning procedures. The commissioning report shall include all configuration checksheets with final values listed for all parameters, setpoints, P, I, D setting constants, calibration data for all devices, results of adjustments, and results of testing.

Performance Verification Test Report; GA.

Eight copies of the HVAC Control System Performance Verification Test Report, in booklet form and indexed, within 30 days after completion of the test. The HVAC control system performance verification test report shall include data collected during the HVAC control system performance verification test. The original copies of all data gathered during the performance verification test shall be turned over to the Government after Government approval of the test results.

SD-18 Records

Service Organizations; FIO.

Three copies of a list of service organizations qualified to service the HVAC control system. The list shall include the service organization name, address, technical point of contact and telephone number, and contractual point of contact and telephone number.

SD-19 Operation and Maintenance Manuals

Operation Manual; GA. Maintenance and Repair Manual; GA.

Eight copies of the HVAC Control System Operation Manual and HVAC Control System Maintenance and Repair Manual, for each HVAC control system, 30 days before the date scheduled for the training course.

1.4 DELIVERY AND STORAGE

Products shall be stored with protection from the weather, humidity and temperature variations, dirt and dust, and other contaminants, within the storage condition limits published by the equipment manufacturer. Dampers shall be stored so that seal integrity, blade alignment and frame alignment

are maintained.

1.5 OPERATION MANUAL

An HVAC control system operation manual in indexed booklet form shall be provided for each HVAC control system. The operation manual shall include the HVAC control system sequence of operation, and procedures for the HVAC system start-up, operation and shut-down. The operation manual shall include as-built HVAC control system detail drawings. The operation manual shall include the as-built configuration checksheets, the procedures for changing HVAC control system setpoints, and the procedures for placing HVAC system controllers in the manual control mode.

a. The procedures for changing HVAC control system setpoints shall describe the step-by-step procedures required to change the process variable setpoints, the alarm setpoints, the bias settings, and setpoint reset schedules.

b. The procedures for placing HVAC system controllers in the manual control mode shall describe step-by-step procedures required to obtain manual control of each controlled device and to manually adjust their positions.

1.6 MAINTENANCE AND REPAIR MANUAL

An HVAC control system maintenance and repair manual in indexed booklet form in hardback binders shall be provided for each HVAC control system. The maintenance and repair manual shall include the routine maintenance checklist, a recommended repair methods list, a list of recommended maintenance and repair tools, the qualified service organization list, the as-built commissioning procedures and report, the as-built performance verification test procedures and report, and the as-built equipment data booklet.

a. The routine maintenance checklist shall be arranged in a columnar format. The first column shall list all devices listed in the equipment compliance booklet, the second column shall state the maintenance activity or state no maintenance required, the third column shall state the frequency of the maintenance activity, and the fourth column for additional comments or reference.

b. The recommended repair methods list shall be arranged in a columnar format and shall list all devices in the equipment data compliance booklet and state the guidance on recommended repair methods, either field repair, factory repair, or whole-item replacement.

c. The as-built equipment data booklet shall include the equipment compliance booklet and manufacturer supplied user manuals and information.

d. If the operation manual and the maintenance and repair manual are provided in a common volume, they shall be clearly differentiated and separately indexed.

1.7 MAINTENANCE AND SERVICE

Services, materials and equipment shall be provided as necessary to maintain the entire system in an operational state as specified for a period of one year after successful completion and acceptance of the Performance Verification Test. Impacts on facility operations shall be minimized.

1.7.1 Description of Work

The adjustment and repair of the system shall include the manufacturer's required adjustments of computer equipment, software updates, transmission equipment and instrumentation and control devices.

1.7.2 Personnel

Service personnel shall be qualified to accomplish work promptly and satisfactorily. The Government shall be advised in writing of the name of the designated service representative, and of any changes in personnel.

1.7.3 Scheduled Inspections

Two inspections shall be performed at six-month intervals (or less if required by the manufacturer), and all work required shall be performed. Inspections shall be scheduled in June and December. These inspections shall include:

a. Visual checks and operational tests of equipment.

b. Fan checks and filter changes for control system equipment.

c. Clean control system equipment including interior and exterior surfaces.

d. Check and calibrate each field device. Check and calibrate 50 percent of the total analog points during the first inspection. Check and calibrate the remaining 50 percent of the analog points during the second major inspection. Certify analog test instrumentation accuracy to be twice that of the device being calibrated. Randomly check at least 25 percent of all digital points for proper operation during the first inspection. Randomly check at least 25 percent of the remaining digital points during the second inspection.

e. Run system software diagnostics and correct diagnosed problems.

f. Resolve any previous outstanding problems.

1.7.4 Scheduled Work

This work shall be performed during regular working hours, Monday through Friday, excluding legal holidays.

1.7.5 Emergency Service

The Government will initiate service calls when the system is not functioning properly. Qualified personnel shall be available to provide service to the system. A telephone number where the service supervisor can be reached at all times shall be provided. Service personnel shall be at the site within 24 hours after receiving a request for service. The control system shall be restored to proper operating condition within three calendar days after receiving a request for service.

1.7.6 Operation

Scheduled adjustments and repairs shall include verification of the control system operation as demonstrated by the applicable tests of the performance verification test.

1.7.7 Records and Logs

Dated records and logs shall be kept of each task, with cumulative records for each major component, and for the complete system chronologically. A continuous log shall be maintained for all devices. The log shall contain initial analog span and zero calibration values and digital points. Complete logs shall be kept and shall be available for inspection onsite, demonstrating that planned and systematic adjustments and repairs have been accomplished for the control system.

1.7.8 Work Requests

Each service call request shall be recorded as received and shall include the serial number identifying the component involved, its location, date and time the call was received, nature of trouble, names of the service personnel assigned to the task, instructions describing what has to be done, the amount and nature of the materials to be used, the time and date work started, and the time and date of completion. A record of the work performed shall be submitted within 5 days after work is accomplished.

1.7.9 System Modifications

Recommendations for system modification shall be submitted in writing. No system modifications, including operating parameters and control settings, shall be made without prior approval of the Government. Any modifications made to the system shall be incorporated into the operations and maintenance manuals, and other documentation affected.

1.7.10 Software

Updates to the software shall be provided for system, operating and application software, and operation in the system shall be verified. Updates shall be incorporated into operations and maintenance manuals, and software documentation. There shall be at least one scheduled update near the end of the first year's warranty period, at which time the latest released version of the Contractor's software shall be installed and validated.

1.8 FACTORY TESTING

The Contractor shall assemble the factory test DDC system as specified and shall perform test to demonstrate that the performance of the system satisfies the requirements of this specification. Model numbers of equipment tested shall be identical to those to be delivered to the site. Original copies of data produced, including results of each test procedure during factory testing shall be delivered to the Government at the conclusion of testing, prior to Government approval of the test. The test results documentation shall be arranged so that commands, responses, and data acquired are correlated in a manner which will allow for logical interpretation of the data.

1.8.1 Factory Test Setup

The factory test setup shall include the following:

a. Central workstation/tester.

b. Printer.

c. DDC test set.

d. Portable workstation/tester.

e. Communication links of each type and speed including modems.

f. Dial-up MODEM.

g. Software.

PART 2 PRODUCTS

2.1 GENERAL EQUIPMENT REQUIREMENTS

Units of the same type of equipment shall be products of a single manufacturer. Each major component of equipment shall have the manufacturer's name and address, and the model and serial number in a conspicuous place. Materials and equipment shall be standard products of a manufacturer regularly engaged in the manufacturing of such products, which are of a similar material, design and workmanship. The standard products shall have been in a satisfactory commercial or industrial use for two years prior to use on this project. The two years' use shall include applications of equipment and materials under similar circumstances and of similar size. The two years' experience shall be satisfactorily completed by a product which has been sold or is offered for sale on the commercial market through advertisements, manufacturers' catalogs, or brochures. Products having less than a two-year field service record will be acceptable if a certified record of satisfactory field operation, for not less than 6,000 hours exclusive of the manufacturer's factory tests, can be shown. The equipment items shall be supported by a service organization. Items of the same type and purpose shall be identical, including equipment, assemblies, parts and components. Automatic temperature controls shall be direct digital controls that will provide the required sequence of

operation.

2.1.1 Electrical and Electronic Devices

Electrical, electronic, and electropneumatic devices not located within a DDC panel shall have a NEMA ICS 1 enclosure in accordance with NEMA 250 unless otherwise shown.

2.1.2 Standard Signals

Except for air distribution terminal unit control equipment, the output of all analog transmitters and the analog input and output of all DDC controllers shall be 4-to-20 mAdc signals. The signal shall originate from current-sourcing devices and shall be received by current-sinking devices.

2.1.3 Ambient Temperature Limits

DDC panels shall have ambient condition ratings of 35 to 120 degrees F and 10 to 95 percent relative humidity, noncondensing. Devices installed outdoors shall operate within limit ratings of minus 35 to plus 150 degrees F. Instrumentation and control elements shall be rated for continuous operation under the ambient environmental temperature, pressure, humidity, and vibration conditions specified or normally encountered for the installed location.

2.1.4 Year 2000 Compliance

All equipment and software shall be Year 2000 compliant and shall be able to accurately process date/time data (including, but not limited to, calculating, comparing, and sequencing) from, into, and between the twentieth and twenty-first centuries, including leap year calculations, when used in accordance with the product documentation provided by the contractor, provided that all products (e.g. hardware, software, firmware) used in combination with other information technology, shall accurately process date/time data if other information technology properly exchanges date/time data with it.

2.2 WIRING

2.2.1 Terminal Blocks

Terminal blocks shall be insulated, modular, feed-through, clamp style with recessed captive screw-type clamping mechanism, shall be suitable for rail mounting, and shall have end plates and partition plates for separation or shall have enclosed sides.

2.2.2 Control Wiring for 24-Volt Circuits

Control wiring for 24-volt circuits shall be 18 AWG minimum, stranded copper and shall be rated for 300-volt service.

2.2.3 Wiring for 120-Volt Circuits

Wiring for 120-volt circuits shall be 18 AWG minimum, stranded copper and

shall be rated for 600-volt service.

2.2.4 Instrumentation Cable

Instrumentation cable shall be 18 AWG, stranded copper, single- or multiple-twisted, minimum 2 inch lay of twist, 100 percent shielded pairs, and shall have a 300-volt insulation. Each pair shall have a 20 AWG tinned-copper drain wire and individual overall pair insulation. Cables shall have an overall aluminum-polyester or tinned-copper cable-shield tape, overall 20 AWG tinned-copper cable drain wire, and overall cable insulation.

2.2.5 Transformers

Step down transformers shall be utilized where control equipment operates at lower than line circuit voltage. Transformers, other than transformers in bridge circuits, shall have primaries wound for the voltage available and secondaries wound for the correct control circuit voltage. Transformer shall be sized so that the connected load is 80 percent of the rated capacity or less. Transformers shall conform to UL 508 and NEMA ST 1.

2.3 ACTUATORS

Actuators shall be electric or electronic as shown and shall be provided with mounting and connecting hardware. Electric or electronic actuators shall be used for variable air volume (VAV) air terminal units. Actuators shall fail to their spring-return positions on signal or power failure ,except that VAV terminal unit actuators may be of the floating type. The actuator stroke shall be limited in the direction of power stroke by an adjustable stop. Actuators shall have a visible position indicator. Actuators shall smoothly open or close the devices to which they are applied and shall have a full stroke response time of 60 seconds or less. Electric actuators shall have an oil-immersed gear train. Electric or electronic actuators operating in series shall have an auxiliary actuator driver. Electric or electronic actuators used in sequencing applications shall have an adjustable operating range and start point.

2.3.1 Valve Actuators

Valve actuators shall be selected to provide a minimum of 125 percent of the motive power necessary to operate the valve over its full range of operation.

2.4 AUTOMATIC CONTROL VALVES

Valves shall have stainless-steel stems and stuffing boxes with extended necks to clear the piping insulation. Unless otherwise stated, valves shall have globe style bodies. Valve bodies shall be designed for not less than 125 psig working pressure or 150 percent of the system operating pressure, whichever is greater. Valve leakage rating shall be 0.01 percent of rated Cv. Unless otherwise specified, bodies for valves 1-1/2 inches and smaller shall be brass or bronze, with threaded or union ends; bodies for 2 inch valves shall have threaded ends; and bodies for valves 2 to 3 inches shall be of brass, bronze or iron. Bodies for valves 2-1/2 inches

and larger shall be provided with flanged-end connections. Valve Cv shall be within 100 to 125 percent of the Cv shown.

2.4.1 Butterfly Valve Assembly

Butterfly valves shall be threaded lug type suitable for dead-end service and modulation to the fully-closed position, with carbon-steel bodies and noncorrosive discs, stainless steel shafts supported by bearings, and EPDM seats suitable for temperatures from minus 20 to plus 250 degrees F. Valves shall have a manual means of operation independent of the actuator. The rated Cv for butterfly valves shall be the value Cv at 70% open (60 degrees open).

2.4.2 Two-Way Valves

Two-way modulating valves shall have equal-percentage characteristics.

2.4.3 Duct-Coil and Terminal-Unit-Coil Valves

Control valves with either flare-type or solder-type ends shall be provided for duct or terminal-unit coils. Flare nuts shall be furnished for each flare-type end valve.

2.4.4 Valves for Chilled-Water, Condenser-Water, and Glycol Service

Internal valve trim shall be bronze except that valve stems may be type 316 stainless steel. Valve Cv shall be within 100 to 125 percent of the Cv shown. Valves 4 inches and larger shall be butterfly.

2.4.5 Valves for Hot-Water Service

For hot water service below 250 degrees F internal trim (including seats, seat rings, modulating plugs, and springs) of valves controlling water hotter than 210 degrees F shall be Type 316 stainless steel. Internal trim for valves controlling water 210 degrees F or less shall be brass or bronze. Nonmetallic parts of hot-water control valves shall be suitable for a minimum continuous operating temperature of 250 degrees F or 50 degrees F above the system design temperature, whichever is higher. Valves 4 inches and larger shall be butterfly valves.

2.4.6 Valves for Steam Service

Bodies for valves 4 inches and larger shall be iron. Internal valve trim shall be Type 316 stainless steel. Valve Cv shall be not less than shown nor greater than the Cv of the manufacturer's next larger size.

2.5 DAMPERS

2.5.1 Damper Assembly

A single damper section shall have blades no longer than 48 inches and shall be no higher than 72 inches. Maximum damper blade width shall be 8 inches. Larger sizes shall be made from a combination of sections. Dampers shall be steel, or other materials where shown. Flat blades shall

be made rigid by folding the edges. Blade-operating linkages shall be within the frame so that blade-connecting devices within the same damper section shall not be located directly in the air stream. Damper axles shall be 0.5 inch minimum, plated steel rods supported in the damper frame by stainless steel or bronze bearings. Blades mounted vertically shall be supported by thrust bearings. Pressure drop through dampers shall not exceed 0.04 inch water gauge at 1,000 feet per minute in the wide-open position. Frames shall not be less than 2 inches in width. Dampers shall be tested in accordance with AMCA 500.

2.5.2 Operating Links

Operating links external to dampers, such as crankarms, connecting rods, and line shafting for transmitting motion from damper actuators to dampers, shall withstand a load equal to at least twice the maximum required damper-operating force. Rod lengths shall be adjustable. Links shall be brass, bronze, zinc-coated steel, or stainless steel. Working parts of joints and clevises shall be brass, bronze, or stainless steel. Adjustments of crankarms shall control the open and closed positions of dampers.

2.5.3 Damper Types

Dampers shall be parallel-blade type.

2.5.3.1 Outside Air, Return Air, and Relief Air Dampers

Outside air, return air and relief air dampers shall be provided where shown. Blades shall have interlocking edges and shall be provided with compressible seals at points of contact. The channel frames of the dampers shall be provided with jamb seals to minimize air leakage. Dampers shall not leak in excess of 20 cfm per square foot at 4 inches water gauge static pressure when closed. Seals shall be suitable for an operating temperature range of minus 40 to plus 200 degrees F. Dampers shall be rated at not less than 2,000 feet per minute air velocity. Provide end switches as specified below.

2.5.3.2 Mechanical and Electrical Space Ventilation Dampers

Mechanical and electrical space ventilation dampers shall be as shown. Dampers shall not leak in excess of 80 cfm square foot at 4 inches water gauge static pressure when closed. Dampers shall be rated at not less than 1,500 feet per minute air velocity.

2.5.3.3 Smoke Dampers at "SM" and Fire/Smoke Dampers "F/SM"

Smoke-damper and actuator assembly required per NFPA 90A shall meet the Class II leakage requirements of UL 555S. Dampers shall be rated at not less than 2000 fpm air velocity.

Dampers shown on Drawings designated as either "SM" or "F/SM" shall comply with the following. They shall have a U.L. Label. Dampers shall be electrically operated combination fire and smoke Ruskin, Imperial, or approved equal. They shall be provided with factory installed U.L. rated

full sleeves. Provide air foil or "V" Blade damper blades supported with shafts and stainless steel bearings to allow daily operation. Provide intermediate supports and bearings for damper blades more than 36 inches long. They shall conform to UL Standard 555 and 555S as leakage rated dampers in smoke control systems and when closed shall be equal to a 1-1/2 hour fire damper. Leakage shall conform to Class 2 with maximum leakage of 10 CFM/Sq. ft. at 1 inch W.G. Damper actuators and EP's shall be provided by the damper manufacturer. They shall be provided with position indicator switches to enable remote status of open or closed positions) (only those dampers designated in the electrical trade plans and specifications will be wired for remote status and remote open/closed operation, but all dampers will be provided with position indicators for possible future use). Note that dampers that are controlled from a central fire command station shall be provided with a 212 deg. F. heat sensor with normally closed contacts (manual reset) to close and lock damper if open. Additionally, dampers shall be factory equiped with a second normally closed heat sensor correlating to the operator/actuator degradation temperature classification (250 deg. F. to 350 deg. F., depending on actuator utilized). The second sensor is wired through a manual override switch on the central fire command station. Dampers that are not controlled from a central fire command station shall have a fusible link which melts on heat causing damper to close and lock in a closed position. The following will be accepted in lieu of the two firestats described. A resettable bimetallic link which opens on heat permitting damper to close and lock if open. This link may be re-engaged from fire command station at temperature of 150 deg. F. or less.

1. Dampers shown on Drawings designated "SM" shall comply in all respects to "F/S" damper description including position indicating switches except they shall not be provided with a heat sensor or fusible link.

2. Each end switch shall be a hermetically sealed switch with a trip lever and over-travel mechanism. The switch enclosure shall be suitable for mounting on the duct exterior and shall permit setting the position of the trip lever that actuates the switch. The trip lever shall be aligned with the damper blade.

2.6 SMOKE DETECTORS

Duct smoke detectors shall be provided under Section 13851 FIRE PROTECTION AND ALARM SYSTEM, ADDRESSABLE. Detectors shall be connected to the EMCS under this specification Section as described in this Section.

2.7 INSTRUMENTATION

2.7.1 Measurements

Transmitters shall be calibrated to provide the following measurements, over the indicated ranges, for an output of 4 to 20 mAdc:

a. Conditioned space temperature, from 50 to 85 degrees F.

b. Duct temperature, from 40 to 140 degrees F.

c. Chilled-water temperature, from 30 to 100 degrees F.

d. Heating hot-water temperature, from 100 to 250 degrees F.

e. Condenser-water temperature, from 30 to 130 degrees F.

f. Outside-air temperature, from minus 30 to 130 degrees F.

g. Relative humidity, 0 to 100 percent for space and duct high-limit applications.

h. Differential pressure for VAV supply-duct static pressure from 0 to 2.0 inches water gauge.

i. Electronic air-flow measurement station and transmitter, from 125 to 2500 fpm.

2.7.2 Temperature Instruments

2.7.2.1 Resistance Temperature Detectors (RTD)

Temperature sensors shall be 100 ohms 3- or 4-wire RTD. Each RTD shall be platinum with a tolerance of plus or minus 0.1 percent at 32 degrees F, and shall be encapsulated in epoxy, series 300 stainless steel, anodized aluminum, or copper. Each RTD shall be furnished with an RTD transmitter as specified, integrally mounted unless otherwise shown.

2.7.2.2 Continuous Averaging RTD

Continuous averaging RTDs shall have a tolerance of plus or minus 1.0 degree F at the reference temperature, and shall be of sufficient length to ensure that the resistance represents an average over the cross section in which it is installed. The sensing element shall have a bendable copper sheath. Each averaging RTD shall be furnished with an RTD transmitter to match the resistance range of the averaging RTD.

2.7.2.3 RTD Transmitter

The RTD transmitter shall match the resistance range of the RTD. The transmitter shall be a two-wire, loop powered device. The transmitter shall produce a linear 4-to-20 mAdc output corresponding to the required temperature measurement. The output error shall not exceed 0.1 percent of the calibrated measurement.

2.7.3 Relative Humidity Instruments

A relative-humidity instrument for indoor application shall have a measurement range from 0 to 100 percent relative-humidity and be rated for operation at ambient air temperatures within the range of 25 to 130 degrees F. It shall be capable of being exposed to a condensing air stream (100 percent RH) with no adverse effect to the sensor's calibration or other harm to the instrument. The instrument shall be of the wall-mounted or duct-mounted type, as required by the application, and shall be provided

with any required accessories. Instruments used in duct high-limit applications shall have a bulk polymer resistive sensing element. Duct-mounted instruments shall be provided with a duct probe designed to protect the sensing element from dust accumulation and mechanical damage. The instrument (sensing element and transmitter) shall be a two-wire, loop-powered device and shall have an accuracy of plus or minus three percent of full scale within the range of 20 to 80 percent relative humidity. The instrument shall have a typical long-term stability of 1 percent or less drift per year. The transmitter shall convert the sensing element's output to a linear 4-20 mAdc output signal in proportion to the measured relative-humidity value. The transmitter shall include offset and span adjustments.

2.7.4 Electronic Airflow Measurement Stations and Transmitters

2.7.4.1 Flow Measuring for Variable Volume Air Handling Systems

The Contractor shall provide a complete Electronic Airflow Measurement System. The airflow measuring devices shall be capable of continuously monitoring the airflow rates and electronically transmit to the temperature control system a linear output signal to airflow. The output signal shall be 4-20mA. The output signal or total system accuracy shall be <3% or +/- 3 to 5% of reading if installed per manufacturer's guidelines.

The system processing center (SPC) shall be microprocessor based totally solid state. The SPC shall come with factory provided software and a RS-232 port for downloading and uploading. One SPC shall be provided for each variable volume air handling system. The SPC shall be the interface point to the building+g DDC system for the 4-20mA signals from each system. All airflow measuring stations shall communicate digitally to the SPC that will produce individual analog outputs, 4-20 mA. The power requirement is 24 VAC non-grounded. The SPC shall come factory-calibrated, but may be re-calibrated in the field using factory provided software. The SPC operating range is 45 to 120 degrees F and is enclosed in a powder-coated steel enclosure for indoor use only. The SPC shall have power loss protection with a EEPROM and Lithium Battery.

The electronic airflow satellite sensor for measuring airflow rates in ducts and air handlers shall be the electronic flow sensor. The satellite shall connect to the SPC by a three conductor non-shielded cable. Airflow sensors shall be installed in the supply air duct, return air duct and outside air duct of each variable volume system. The Contractor shall provide a three conductor cable connection from each sensor to the system processing center (SPC) located within 30 ft. of each air handling unit. The sensor accuracy shall be +/- 2% of reading over the full range of 0 to 5000 FPM. The sensors shall be glass encapsulated self-heated thermistor and a glass encapsulated thermistor temperature sensor. The support strut and electronic housing shall be made of 316 stainless steel. The operating range for the sensors shall be -20 to 160 degrees F. Sensor density shall be determined by the airflow sensor manufacturer to meet the job requirements. The electronic enclosure shall be constructed of aluminum.

The electronic airflow satellite sensor for measuring airflow rates in the inlet of fans shall be the fan inlet sensor. The satellite shall connect

to the SPC by a three conductor non-shielded cable. The sensor linearity shall be +/- 2% of reading over the full range of 0 to 10,000 FPM. The self-heated thermistor shall be glass encapsulated and the temperature thermistor shall be 316 stainless steel encapsulated. The support struts shall be made of steel and adjustable to fit the fan inlet. Operating range for the sensors shall be -20 to 160 degrees F. The sensors shall have no measurable loss of fan performance or increase in fan sound levels. The electronic enclosure shall be constructed of aluminum.

The ATC Contractor shall provide a complete Electronic Bi-Directional Airflow Measuring System in the relief duct of each system. The bi-directional airflow measuring device shall be capable of continuously monitoring airflow rates and direction of airflow. The BDBD shall electronically transmit to the temperature control system a linear output signal to airflow. The output signal shall be 4020mA. The electronics shall be microprocessor based and have a sensor accuracy of +/- 1% of reading over the full range of 0 to 2000 FPM. The output scaling shall be from -2000 FPM to +2000 FPM. The sensors shall be glass encapsulated thermistors. The enclosures shall be made of aluminum. Operating range shall be -20 to 160 degrees F. Power requirements shall be 24 VAC isolated from other devices and not grounded. The DBDB shall come with the required tubing and connectors to measure within the relief duct across the relief damper.

The Contractor shall connect the 4-zoma output signal to the control system to assure positive flow in the relief duct.

2.7.4.2 Flow Measuring for Constant Volume Air Handling Systems

The ATC Contractor shall provide a complete Electronic Airflow Measuring System. The airflow measuring devices shall be capable of continuously monitoring airflow rates and electronically transmit to the automatic temperature control system a linear output signal to the airflow. The output signal shall be 4-20 mA. The output signal or total system accuracy shall be <3% or +/- 3 to 5% of reading if installed per manufacturer's guidelines.

The electronic airflow measuring station for measuring the airflow rates in ducts or air handlers shall be an electronic flow sensor with microprocessor. The electronics shall be microprocessor based enclosed in an aluminum enclosure. The sensor accuracy shall be +/- 2% of reading over the full range of 0 to 5000 FPM. The sensor shall be glass encapsulated self-heated thermistor and a glass encapsulated thermistor temperature sensor. The support strut and electronic housing shall be made of 316 stainless steel. The operating range for the sensors shall be -20 to 160 degrees F. Sensor density shall be determined by the airflow sensor manufacturer to meet the job requirements. Power requirements shall be 24 VAC, isolated from other devices and not grounded.

The Contractor shall connect the output signal 4-20 mA to the DDC system via an analogue input for each 4-20 mA signal. The sequence associated will be as described in the sequence of operation.

2.7.4.3 Transmitters

Each transmitter shall produce a linear, temperature compensated 4-to-20 mAdc, output corresponding to the required velocity pressure measurement. The transmitter shall be a two-wire, loop powered device. The output error of the transmitter shall not exceed 0.5 percent of the calibrated measurement.

2.7.5 Differential Pressure Instruments

The instrument shall be a pressure transmitter with an integral sensing element. The instrument over pressure rating shall be 300 percent of the operating pressure. The sensor/transmitter assembly accuracy shall be plus or minus two percent of full scale. The transmitter shall be a two-wire, loop-powered device. The transmitter shall produce a linear 4-to-20 mAdc output corresponding to the required pressure measurement.

2.7.6 Thermowells

Thermowells shall be Series 300 stainless steel with threaded brass plug and chain, 2 inch lagging neck and extension type well. Inside diameter and insertion length shall be as required for the application.

2.7.7 Sunshields

Sunshields for outside air temperature sensing elements shall prevent the sun from directly striking the temperature sensing elements. The sunshields shall be provided with adequate ventilation so that the sensing element responds to the ambient temperature of the surroundings. The top of each sunshield shall have a galvanized metal rainshield projecting over the face of the sunshield. The sunshields shall be painted white.

2.7.8 CO2 SENSOR

General: Provide electronic measuring device to measure CO2 levels in space and/or ductwork. Units shall be certified to UL and CSA requirements.

Product: Provide electronic CO2 measuring device that conforms to the following requirements:

1. Electronics: Microprocessor based, totally solid state.
2. Sensing: Infrared cells.
3. Analog Outputs: 0-10 VDC (option, 4-20mA).
4. Power Requirements: 24 VAC.
5. Mounting: CO2D, duct mounted; CO2W, wall mounted.
6. Display: Option, LCD display.
7. Temperature Range: 32 to 100 degrees F.
8. Humidity Range: 5 to 95% RH.
9. Range CO2: 0 to 2,000 ppm.
10. Accuracy: 3% of reading.
11. Response Time: 35 seconds for 90% of reading.

2.8 THERMOSTATS

Thermostat ranges shall be selected so that the setpoint is adjustable

without tools between plus or minus 10 degrees F of the setpoint shown. Thermostats shall be electronic or electric.

2.8.1 Nonmodulating Room Thermostats

Contacts shall be single-pole double-throw (SPDT), hermetically sealed, and wired to identified terminals. Maximum differential shall be 5 degrees F. Room thermostats shall be enclosed with separate locking covers (guards).

2.8.2 Freezestats

Freezestats shall be manual reset, low temperature safety thermostats, with NO and NC contacts and a 20 foot element which shall respond to the coldest 18 inch segment.

2.9 INDICATING DEVICES

2.9.1 Thermometers

2.9.1.1 Piping System Thermometers

Piping system thermometers shall have brass, malleable iron or aluminum alloy case and frame, clear protective face, permanently stabilized glass tube with indicating-fluid column, white face, black numbers, and a 9 inch scale. Thermometers for piping systems shall have rigid stems with straight, angular, or inclined pattern.

2.9.1.2 Piping System Thermometer Stems

Thermometer stems shall have expansion heads as required to prevent breakage at extreme temperatures. On rigid-stem thermometers, the space between bulb and stem shall be filled with a heat-transfer medium.

2.9.1.3 Accuracy

Thermometers shall have an accuracy of plus or minus one percent of scale range. Thermometers shall have a range suitable for the application.

2.9.2 Pressure Gauges

Gauges shall be 2 inch (nominal) size, back connected, suitable for field or panel mounting as required, shall have black legend on white background, and shall have a pointer traveling through a 270-degree arc. Accuracy shall be plus or minus three percent of scale range. Gauges shall meet requirements of ASME B40.1.

2.9.2.1 Hydronic System Gauges

Gauges for hydronic system applications shall have ranges and graduations as shown.

2.10 CONTROL DEVICES AND ACCESSORIES

2.10.1 Relays

Control relay contacts shall have utilization category and ratings selected for the application, with a minimum of two sets of contacts (two normally open, two normally closed) enclosed in a dustproof enclosure. Relays shall be rated for a minimum life of one million operations. Operating time shall be 20 milliseconds or less. Relays shall be equipped with coil transient suppression devices to limit transients to 150 percent of rated coil voltage. Time delay relays shall be 2PDT with eight-pin connectors, dust cover, and a matching rail-mounted socket. Adjustable timing range shall be 0 to 5 minutes. Power consumption shall not be greater than three watts.

2.10.2 Joule or Watthour Meters

Watthour meters shall be in accordance with ANSI C12.1 and have pulse initiators for remote monitoring of Watthour consumption. Pulse initiator shall consist of form C contacts with a current rating not to exceed two amperes and voltage not to exceed 500 V, with combinations of VA not to exceed 100 VA, and a life rating of one billion operations. Meter sockets shall be in accordance with ANSI C12.1.

2.10.3 Joule or Watthour Meters with Demand Register

Meters shall be in accordance with ANSI C12.1 and shall have pulse initiators for remote monitoring of Watthour consumption and instantaneous demand. Pulse initiators shall consist of form C contacts with a current rating not to exceed two amperes and voltage not to exceed 500 V, with combinations of VA not to exceed 100 VA, and a life rating of one billion operations. Meter sockets shall be in accordance with ANSI C12.1

2.10.4 Joule or Watthour Transducers

Watthour transducers shall have an accuracy of plus or minus 0.25 percent for kW and kWh outputs from full lag to full lead power factor. Input ranges for kW and kWh transducers shall be selectable without requiring the changing of current or potential transformers. The output shall be 4 to 20 mAdc.

2.10.5 Current Sensing Relays

Current sensing relays shall provide a normally-open contact rated at a minimum of 50 volts peak and 1/2 ampere or 25 VA, noninductive. There shall be a single hole for passage of current carrying conductors. The devices shall be sized for operation at 50 percent rated current based on the connected load. Voltage isolation shall be a minimum of 600 volts.

2.10.6 Power-Line Conditioners (PLC)

Power line conditioners shall be furnished for each DDC panel. The PLCs shall provide both voltage regulation and noise rejection. The PLCs shall be of the ferro-resonant design, with no moving parts and no tap switching, while electrically isolating the secondary from the power-line side. The PLCs shall be sized for 125 percent of the actual connected kVA load. Characteristics of the PLC shall be as follows:

a. At 85 percent load, the output voltage shall not deviate by more than plus or minus one percent of nominal when the input voltage fluctuates between minus 20 percent to plus 10 percent of nominal.

b. During load changes of zero to full load, the output voltage shall not deviate by more than plus or minus three percent of nominal voltage. Full correction of load switching disturbances shall be accomplished within five cycles, and 95 percent correction shall be accomplished within two cycles of the onset of the disturbance.

c. Total harmonic distortion shall not exceed 3-1/2 percent at full load.

2.11 DIRECT DIGITAL CONTROL (DDC) HARDWARE

All functions, constraints, data base parameters, operator developed programs and any other data shall be downloadable from a portable workstation/tester or the central workstation/tester to network control panels, RIU's, universal programmable controllers, and unitary controllers. Download shall be accomplished through both the primary network and the local DDC portable workstation/tester port.

2.11.1 Network Control Panel

Network control panels shall be microcomputer-based with sufficient memory provided to perform all specified and shown network control panel functions and operations, including spare capacity for all spares and its I/O functions specified. Each network control panel and remote I/O units (RIU) shall have a minimum of 10% of its I/O functions as spare capacity but not less than 2 of each type used in each. The type of spares shall be in the same proportion as the implemented I/O functions on the panel, but in no case shall there be less than two spare points of each type. The panel I/O functions shall be furnished complete, with no changes or additions necessary to support implementation of spare functions. Output relays associated with digital signals shall be considered part of the I/O function, whether physically mounted in the enclosure or separately mounted. Implementation of spare points shall necessitate only providing the additional field sensor or control device, field wiring including connection to the system, and point definition assignment by the operator using the central workstation/tester or portable workstation/tester. The panel shall contain all necessary I/O functions to connect to field sensors and control panels. I/O function operation shall be fully supervised to detect I/O function failures. Network control panels shall operate in an independent stand-alone mode, which is defined as all network control panel operations performed by the network control panel without any continuing input from other Direct digital controls or portable workstation/tester. The network control panel shall be capable of controlling a mix of at least 32 RIUs, unitary controllers, and universal programmable controllers.

2.11.1.1 Integral Features

The network control panel shall include:

a. Main power switch.

b. Power on indicator.

c. Portable workstation/tester port, connector, and if necessary power supply.

d. Manufacturers control network port.

e. On-Off-Auto switches for each DO which controls a device. These switches shall be mounted in the field panel, with the exception of motors, for which the switch shall be mounted at the motor control center. On-Off-Auto switches are not required for DO associated with a status or alarm such as pilot lights. The status of these switches shall be available to the panel for further processing.

f. Minimum-Maximum-Auto switches, or Auto-Manual switches with manual output override, for each AO. The status of these shall be available to the panel for further processing.

g. An intrusion detection device, connected as an alarm.

2.11.1.2 Communication Interfaces

The following communication capabilities shall function simultaneously.

a. Manufacturers Control Network. Manufacturers control network communications interfaces for each data transmission systems (DTS) circuit between network control panels and RIUs, unitary controllers, and universal programmable controllers, shall be provided. Communication interfaces shall be provided between each network control panel and associated I/O functions. The DTS will provide for transmission speeds necessary to comply with performance requirements specified. DTS equipment shall be installed in the network control panel enclosure.

b. Portable Workstation/Tester Port. A communications port for interfacing to a portable workstation/tester shall be provided. Network control panel workstation/tester port other than RS-232,shall be converted to RS-232, including cabling and power supply, and shall be permanently installed in the panel.

c. Primary Network Port. The network control panel shall either have a built in primary network Port or be capable of accepting a primary network port expansion card for future networking to a base wide utility monitoring and control system (UMCS). The primary network port expansion card shall be either Ethernet (IEEE802.3) or ARCNET.

2.11.1.3 Memory and Real Time Clock (RTC) Backup

The network control panel memory and real time clock functions shall continue to operate for a minimum of 72 hours in the event of a power

failure. If rechargeable batteries are provided, automatic charging of batteries shall be provided. Whenever a either a permanent workstation/tester or portable workstation/tester is monitoring the network control panel, a low battery alarm message shall be sent to it.

2.11.1.4 Duplex Outlet

A single phase, 120 Vac electrical service outlet for use with test equipment shall be furnished either inside or within 6 feet of the network control panel enclosure.

2.11.1.5 Locking Enclosures

Locking type mounting cabinets with common keying shall be furnished for each network control panel.

2.11.1.6 Failure Mode

Upon failure of the network control panel, either due to failure of the network control panel hardware or of the manufacturers control network, the network control panel shall revert to the failure mode as shown.

a. Manufacturers Control Network Failure: Upon failure of the manufacturers control network, the network control panel shall operate in an independent stand-alone mode.

b. Network Control Panel Hardware Failure: Upon failure of the network control panel hardware, the network control panel shall cease operation and stop communications with other network control panels, RIUs, unitary controllers and universal programmable controllers connected to the affected network control panel. The affected network control panel shall respond to this failure as specified and shown.

2.11.2 RIU

The RIU shall be functionally a part of the network control panel as specified, but may be remotely located from the network control panel and communicate over a dedicated communication circuit. When remotely located, the I/O functions shall be subject to the same requirements as for the network control panel hardware. RIUs shall be used to connect remote inputs and outputs to a network control panel and shall contain all necessary I/O functions to connect to field sensors and control devices. RIU operation shall be fully supervised by the network control panel to detect failures. Each RIU shall have a minimum of 10 % of its I/O functions as spare capacity. The type of spares shall be in the same proportion as the implemented I/O functions on the RIU, but in no case shall there be less than two spare points of each type. The RIU shall be furnished complete, with no changes or additions necessary to support implementation of spare functions. Output relays associated with digital signals shall be considered part of the I/O function, whether physically mounted in the enclosure or separately mounted. Implementation of spare points by others shall require only providing the additional field sensor or control device, field wiring including connection to the system, and

point definition assignment by the operator. The RIU shall either report the status of all connected points on each scan, or report the status of all points which have changed state or value since the previous scan.

2.11.2.1 Integral Features

The RIU shall include:

a. Main power switch.

b. Power on indicator.

c. Portable workstation/tester port, connector, and if necessary power supply.

d. Manufacturers control network port.

e. On-Off-Auto switches for each DO which controls a device. These switches shall be mounted in the RIU, with the exception of motors, for which the switch shall be mounted at the motor control center. On-Off-Auto switches are not required for DO associated with a status or alarm such as pilot lights. The status of these switches shall be available to the RIU for further processing.

f. Minimum-Maximum-Auto switches, or Auto-Manual switches with manual output override, for each AO. The status of these shall be available to the panel for further processing.

g. An intrusion detection device, connected as an alarm.

2.11.2.2 Duplex Outlet

A single phase, 120 Vac electrical service outlet for use with test equipment shall be furnished either inside or within 6 feet of the RIU.

2.11.2.3 Locking Enclosures

Locking type mounting cabinets with common keying shall be furnished for each RIU.

2.11.2.4 Failure Mode

Upon failure of the RIU, either due to failure of the RIU hardware or of the DTS, the RIU shall revert to the failure mode shown.

2.11.3 Universal Programmable Controller (UPC)

The universal programmable controller shall be a microprocessor based controller designed and programmed to control and monitor systems as shown. Resident programs shall be contained in reprogramable nonvolatile memory. Each universal programmable controller shall contain necessary power supplies, transformers, memory, I/O functions and communications interfaces necessary to perform its required functions and to provide control and monitoring of connected equipment and devices. It shall contain all

necessary I/O functions to connect to field sensors and controls. I/O operation shall be fully supervised to detect I/O function failures. It shall provide for operation as a device connected to the system via the manufacturers control network.

2.11.3.1 Integral Features

The universal programmable controller shall include as a minimum:

a. Main power switch.

b. Power on indicator.

c. Portable workstation/tester port, connector, and if necessary power supply.

d. Manufacturers control network port.

e. I/O functions

(1) 8 DI

(2) 4 DO

(3) 8 AI

(4) 4 AO

(5) 1 PA

f. On-Off-Auto switches for each DO which controls a device. These switches shall be mounted in the universal programmable controller, with the exception of motors, for which the switch shall be mounted at the motor control center. On-Off-Auto switches are not required for DO associated with a status or alarm such as pilot lights. The status of these switches shall be available to the panel for further processing.

g. Minimum-Maximum-Auto switches, or Auto-Manual switches with manual output override, for each AO. The status of these shall be available to the panel for further processing.

2.11.3.2 Communication Interfaces

The UPC shall have the following communication capabilities which shall function simultaneously.

a. Manufacturers Control Network. The manufacturers control network communications interface for a data transmission systems (DTS) circuit between the UPC and a network control panels shall be provided. The DTS will provide for transmission speeds necessary to comply with performance requirements specified. DTS equipment shall be installed in the UPC Panel enclosure.

b. Portable Workstation/Tester Port. A communications port for interfacing to a portable workstation/tester shall be provided. A UPC workstation/tester port other than RS-232, shall be converted to RS-232, including cabling and power supply, and shall be permanently installed in the panel.

2.11.3.3 Memory and RTC Backup

The UPC memory and real time clock functions shall continue to operate for a minimum of 72 hours in the event of a power failure. If rechargeable batteries are provided, automatic charging of batteries shall be provided. Whenever a either a permanent workstation/tester or portable workstation/tester is monitoring the network control panel, a low battery alarm message shall be sent to it.

2.11.3.4 Specific Requirements

Each universal programmable controller shall be accessible for purposes of application selection, control parameters, set point adjustment, and monitoring from any DDC controller connected to the same manufacturers control network as the universal programmable controller. This shall be done using a portable workstation/tester connected to a portable workstation/tester port either directly or via modem.

2.11.3.5 Locking Enclosures

Locking type mounting cabinets with common keying shall be furnished for each enclosure.

2.11.3.6 Failure Mode

Upon failure of the universal programmable controller, it shall revert to the failure mode of operation as shown.

2.11.4 Unitary Controller

The unitary controller shall be a microprocessor based, stand-alone, dedicated purpose controller, communicating with the network control panel, designed and programmed to control air distribution system mixing boxes, terminal units, heat pumps, fan coil units, self-contained DX units or VAV boxes as shown. Each unitary controller shall contain resident programs in nonvolatile memory for each specific application implemented. Each unitary controller shall contain necessary power supplies, transformers, memory, I/O functions and communications interfaces necessary to perform its required functions and to provide control and monitoring of connected equipment and devices. It shall contain all necessary I/O functions to connect to field sensors and controls. I/O operation shall be fully supervised to detect I/O function failures and shall provide for operation as a device connected to the network control panel via the manufacturers control network.

2.11.4.1 Integral Features

The unitary controller shall include:

a. Main power switch.

b. Power on indicator.

c. Portable workstation/tester port, connector, and power supply.

d. Manufacturers control network port.

e. All I/O functions required to implement the requirements as shown.

f. On-Off-Auto switches for each DO which controls a device. These switches shall be mounted in the field panel, with the exception of motors, for which the switch shall be mounted at the motor control center. On-Off-Auto switches are not required for DO associated with a status or alarm such as pilot lights. The status of these switches shall be available to the panel for further processing.

g. Minimum-Maximum-Auto switches, or Auto-Manual switches with manual output override, for each AO. The status of these shall be available to the panel for further processing.

2.11.4.2 Communication Interfaces

The unitary controller shall have the following communication capabilities which shall function simultaneously.

a. Manufacturers Control Network. The manufacturers control network communications interface for a data transmission systems (DTS) circuit between the unitary controller and a network control panel shall be provided. The DTS will provide for transmission speeds necessary to comply with performance requirements specified. DTS equipment shall be installed in the unitary control panel enclosure.

b. Portable Workstation/Tester Port. A communications port for interfacing to a portable workstation/tester shall be provided. A unitary controller workstation/tester port other than RS-232, shall be converted to RS-232, including cabling and power supply, and shall be permanently installed in the panel. For unitary controller applications where the controller is not mounted in an enclosure, such as for fan-coil units or VAV terminal units, a portable conversion device for an RS-232 connection to the portable workstation/tester may be provided.

2.11.4.3 Specific Requirements

Unitary controller components for new air distribution terminal units shall be furnished to the air distribution terminal unit manufacturer for factory mounting and calibration. Existing air distribution terminal units shall be controlled by field installed unitary controllers.

a. Accessibility and Interfaces: Each unitary controller shall be

accessible for purposes of application selection, control parameters, set point adjustment, and monitoring using a portable workstation/tester connected to the manufacturers control network. They shall also be accessible with a portable workstation/tester connected to the unitary controller portable workstation/tester port.

b. Air Distribution Terminal Unit Controls - Pressure Independent: Controls shall consist of a transducer for connection to the velocity-sensing device provided by the terminal unit supplier in the primary air entering the terminal unit, a room temperature sensor, a damper actuator, and an adjustable microprocessor-based controller. The controller shall operate the damper for cooling and heating and provide control outputs for duct heating coil if applicable. This controller capability shall allow the sequencing of the damper and the heating coil to maintain conditions in the space.

c. Air Distribution Terminal Unit Damper Actuator: Air distribution terminal unit damper actuator shall open or close the device to which it is connected within 60 seconds.

2.11.4.4 Failure Mode

Upon failure of the unitary controller, it shall revert to the failure mode of operation as shown.

2.11.5 Chiller Control Panel

Chiller control panel shall be microprocessor-based and shall provide, both locally and through the Manufacturers Control Network, the control, monitoring, and safety equipment functions provided by the chiller manufacturer's control panel(s). This system shall provide a complete fully functional interface between the chiller and the building DDC system. The chiller control panel instrumentation and control ranges and accuracies shall match those of the chiller manufacturer's control devices. The chiller panel shall have a communication port for interface to a Portable Workstation/Tester through either the Manufacturers Control Network or modem for chiller(s) start/stop, chilled water temperature reset, and monitoring of chiller operating status, alarms, and power consumption.

2.11.6 I/O Functions

2.11.6.1 DDC Hardware I/O Functions

I/O Functions shall be provided as part of the DDC system and shall be in accordance with the following:

a. The analog input (AI) function shall monitor each analog input, perform A-to-D conversion, and hold the digital value in a buffer for interrogation. The A-to-D conversion shall have a minimum resolution of 10 bits plus sign. Signal conditioning shall be provided for each analog input. Analog inputs shall be

individually calibrated for zero and span, in hardware or in software. The AI shall incorporate common mode noise rejection of 50 dB from 0 to 100 Hz for differential inputs, and normal mode noise rejection of 20 dB at 60 Hz from a source impedance of 10,000 ohms. Input ranges shall be within the range of 4-to-20 mAdc.

b. The analog output (AO) function shall accept digital data, perform D-to-A conversion, and output a signal within the range of 4-to-20 mAdc. D-to-A conversion shall have a minimum resolution of eight bits plus sign. Analog outputs shall be individually calibrated for zero and span. Short circuit protection on voltage outputs and open circuit protection on current outputs shall be provided.

c. The digital input (DI) function shall accept on-off, open-close, or other change of state (two state data) indications. Isolation and protection against an applied steady-state voltage up to 180 Vac peak shall be provided.

d. The digital output (DO) function shall provide contact closures for momentary and maintained operation of output devices. Closures shall have a minimum duration of 0.1 second. DO relays shall have an initial breakdown voltage between contacts and coil of at least 500 V peak. Electromagnetic interference suppression shall be furnished on all output lines to limit transients to nondamaging levels. Protection against an applied steady-state voltage up to 180 Vac peak shall be provided. Minimum contact rating shall be one ampere at 24 Vac. Key locked HOA switches shall be provided for manual override of each digital output. Feedback shall be provided to the system as to the status of the output (manual control or automatic). Switches shall be common keyed.

e. The pulse accumulator function shall have the same characteristics as the DI. In addition, a buffer shall be provided to totalize pulses and allow for interrogation by the DDC system. The pulse accumulator shall accept rates up to 20 pulses per second. The totalized value shall be reset to zero upon operator's command.

f. Signal conditioning for sensors shall be provided as specified.

g. The binary coded decimal (BCD) function: The BCD function shall have the same characteristics as the DI, except that, in addition, a buffer shall be provided to totalize inputs and allow for interrogation by the network control panel. The BCD function shall have 16-channel optically isolated buffered inputs to read four digit numbers. The BCD function shall accumulate inputs at rates up to 10 inputs per second.

2.11.6.2 Failure Mode

Upon failure of the I/O function, including data transmission failure, logic power supply failure, DDC processor malfunction, software failure, interposing relay power failure, or any other failure which prevents stand

alone operation of any DDC normally capable of stand alone operation, connected outputs shall be forced to the failure mode shown.

2.11.7 Portable Workstation/Tester

A portable workstation/tester shall be provided and shall be able to connect to any DDC hardware. The portable workstation/tester shall consist of a portable computer with a nominal 10 inch active color matrix liquid crystal display, capable of displaying up to 256 colors at a minimum resolution of 640 X 480 pixels, an external VGA monitor port, 32 bit microprocessor operating at a minimum of 100 MHZ. The portable workstation/tester shall have, as a minimum, a 1200 MB hard drive, 16 megabytes of memory, integral pointing device, serial and parallel ports, color VGA video port for an external color monitor, 3.5 inch floppy disk drive, modem, PCMCIA type 3 slot, rechargeable battery, battery charger and 120 Vac power supply. It shall include carrying case, extra battery, charger and a compatible network adapter. The workstation/tester shall:

a. Run DDC diagnostics.

b. Load all DDC memory resident programs and information, including parameters and constraints.

c. Display any AI, DI, AO, DO, or PA point in engineering units for analog points or status for digital points.

d. Control any AO or DO.

e. Provide an operator interface, contingent on password level, allowing the operator to use full English language words and acronyms, or an object oriented graphical user interface.

f. Display database parameters.

g. Modify database parameters.

h. Accept DDC software and information for subsequent loading into a specific DDC. Provide all necessary software and hardware required to support this function, including an EIA ANSI/EIA/TIA 232-E port.

i. Disable/enable each DDC.

j. Perform all workstation functions as specified.

2.11.8 Central Workstation/Tester

A central workstation/tester shall be provided and shall be able to communicate any network control panel via the primary network. The central workstation/tester shall be functionally equivalent to the portable workstation/tester but is intended to be a stationary unit. The central workstation/tester shall consist of a central computer with a nominal 14 inch VGA color display, capable of displaying up to 256 colors at a minimum resolution of 640 X 480 pixels, 32 bit microprocessor operating at a

minimum of 100 MHZ. The central workstation/tester shall have, as a minimum, a 2100 MB hard drive, 32 megabytes of memory, integral pointing device, serial and parallel ports, color VGA video port for an external color monitor, 3.5 inch floppy disk drive, modem, PCMCIA type three slot, rechargeable battery, battery charger, 120 Vac power supply and network adapter (Ethernet IEEE802.3 or ARCNET). The central workstation/tester shall:

a. Run DDC diagnostics.

b. Load all DDC memory resident programs and information, including parameters and constraints.

c. Display any AI, DI, AO, DO, or PA point in engineering units for analog points or status for digital points.

d. Control any AO or DO.

e. Provide an operator interface, contingent on password level, allowing the operator to use full English language words and acronyms, or an object oriented graphical user interface.

f. Display database parameters.

g. Modify database parameters.

h. Accept DDC software and information for subsequent loading into a specific DDC. Provide all necessary software and hardware required to support this function, including an EIA ANSI/EIA/TIA 232-E port.

i. Disable/enable each DDC.

j. Perform all workstation functions as specified.

2.11.9 Data Terminal Cabinet (DTC)

The DTC shall be an independent metallic enclosure not physically part of the network control panel/RIU as shown. The DTC shall be sized to accommodate the number of I/O functions required for each network control panel/RIU, including installed spares, plus 10% expansion for each type of I/O function provided. The DTC shall be divided into analog input and output groups and digital input and output groups. The DTC shall be provided with double sided screw type terminal strips. One side of the terminal strip shall be used for termination of field wiring from instrumentation-mentation and controls. The other side shall be used to connect the DTC to the network control panel/RIU. Terminal strips shall have individual terminal identification numbers. The DTC shall be a locking type mounting enclosure, with common keying and door switch wired to an input for intrusion alarm annunciation at the central station. DTC keying shall be identical to network control panel/RIU keying.

2.12 DDC SOFTWARE

All DDC software described in this specification shall be furnished as part of the complete DDC System.

2.12.1 Operating System

Each DDC shall contain an operating system that controls and schedules that DDC's activities in real time. The DDC shall maintain a point database in its memory that includes all parameters, constraints, and the latest value or status of all points connected to that DDC. The execution of DDC application programs shall utilize the data in memory resident files. The operating system shall include a real time clock function that maintains the seconds, minutes, hours, date and month, including day of the week. Each DDC real time clock shall be automatically synchronized with the network control panel real time clock at least once per day to plus or minus 10 seconds. When the network control panel is connected to a central workstation/tester, the network control panel RTC shall be updated by the central workstation/tester RTC. The time synchronization shall be accomplished without operator intervention and without requiring system shutdown. The operating system shall allow loading of software, data files data entry, and diagnostics from the central workstation/tester both locally through the central workstation/tester port and remotely through a network control panel and the manufacturers control network.

2.12.1.1 Startup

The DDC shall have startup software that causes automatic commencement of operation without human intervention, including startup of all connected I/O functions. A DDC restart program based on detection of power failure at the DDC shall be included in the DDC software. Upon restoration of power to the DDC, the program shall restart equipment and restore loads to the state at time of power failure, or to the state as commanded by time programs or other overriding programs. The restart program shall include start time delays between successive commands to prevent demand surges or overload trips. The startup software shall initiate operation of self-test diagnostic routines. Upon failure of the DDC, if the database and application software are no longer resident or if the clock cannot be read, the DDC shall not restart and systems shall remain in the failure mode indicated until the necessary repairs are made. If the database and application programs are resident, the DDC shall resume operation after an adjustable time delay of from 0 to 600 seconds. The startup sequence for each DDC shall include a unique time delay setting for each control output when system operation is initiated.

2.12.1.2 Operating Mode

Each DDC shall control and monitor functions as specified, independent of communications with other DDC. This software shall perform all DDC functions and DDC resident application programs as specified using data obtained from I/O functions and based upon the DDC real time clock function. When communications circuits between the DDC are operable, the DDC shall obtain real time clock updates and any required global data values transmitted from other network control panels. The DDC software shall execute commands after performing constraints checks in the DDC. Status and analog values, including alarms and other data shall be

transmitted from other network control panels when communications circuits are operable. If communications are not available, each DDC shall function in stand-alone mode and operational data, including the latest status and value of each point and results of calculations, normally transmitted from other network control panels shall be stored for later transmission to the network control panel. Storage for the latest 256 values shall be provided at each network control panel. Each DDC shall accept software downloaded from the network control panel. Constraints shall reside at the DDC.

2.12.1.3 Failure Mode

Upon failure for any reason, each DDC shall perform an orderly shutdown and force all DDC outputs to a predetermined (failure mode) state, consistent with the failure modes shown and the associated control device.

2.12.2 Functions

The Contractor shall provide software necessary to accomplish the following functions, as appropriate, fully implemented and operational, within each network control panel, RIU, unitary controller and universal programmable controller.

a. Scanning of inputs.

b. Control of outputs.

c. Reporting of analog changes outside a selectable differential.

d. Reporting of unauthorized digital status.

e. Reporting of alarms automatically to network control panel.

f. Reporting of I/O status to network control panel upon request.

g. Maintenance of real time, updated by the network control panel at least once a day.

h. Communication with the network control panel.

i. Execution of DDC resident application programs.

j. Averaging or filtering of AIs.

k. Constraints checks (prior to command issuance).

l. Diagnostics.

m. Portable workstation/tester operation as specified.

n. Reset of PA by operator based on time and value.

2.12.2.1 Analog Monitoring

The system shall measure and transmit analog values including calculated

analog points. An analog change in value is defined as a change exceeding a preset differential value as specified. The record transmitted for each analog value shall include a readily identifiable flag which indicates the abnormal status of the value when it deviates from operator selectable upper and lower analog limits. Analog values shall be expressed in proper engineering units with sign. Engineering units conversions shall be provided for each measurement. Each engineering units conversion set shall include range, span, and conversion equation. A vocabulary of engineering unit descriptors shall be provided, using at least three alphanumeric characters to identify information in the system. The system shall support 255 different engineering units.

2.12.2.2 Logic (Virtual) Points

Logic (virtual) points shall be software points entered in the point database which are not directly associated with a physical I/O function. Logic (virtual) points shall be analog or digital points created by calculation from any combination of digital and analog points, or other data having the properties of real points, including alarms, without the associated hardware. Logic (virtual) points shall be defined or calculated and entered into the database by the Contractor. The calculated analog point shall have point identification in the same format as any other analog point. The calculated point shall be used in any program where the real value is not obtainable directly. Constants used in calculations shall be changeable on-line by the operator. Calculated point values shall be current for use by the system within 10 seconds of the time of any input changes.

2.12.2.3 State Variables

If an analog point represents more than two (up to eight) specific states, each state shall be nameable. For example, a level sensor shall be displayed at its measured engineering units plus a state variable with named states usable in programs or for display such as low alarm/low/normal/high/high alarm.

2.12.2.4 Analog Totalization

Any analog point shall be operator assignable to the totalization program. Up to eight analog values shall be totalized within a selectable time period. At the end of the period, the totals shall be stored. Totalization shall then restart from zero for the next time period. The program shall keep track of the peak and total value measured during the current period and for the previous period. The operator shall be able to set or reset each totalized value individually. The time period shall be able to be operator defined, modified or deleted on-line.

2.12.2.5 Energy Totalization

The system shall calculate the heat energy in Btus, for each energy source consumed by the mechanical systems specified, totalize the calculated Btus, the instantaneous rate in Btus per hour, and store totals in thousands of Btus (MBtu). The Btus calculated shall be totalized for an adjustable time period. The time period shall be defined uniquely for each Btu

totalization.

2.12.2.6 Trending

Any analog or calculated point shall be operator assignable to the trend program. Up to eight points shall be sampled at individually assigned intervals, selectable between one minute and two hours. A minimum of the most recent 128 samples of each trended point shall be stored. The sample intervals shall be able to be defined, modified, or deleted on-line.

2.12.3 I/O Point Database/Parameter Definition

Each I/O point shall be defined in a database residing in the DDC. The definition shall include all physical parameters associated with each point. Each point shall be defined and entered into the database by the Contractor, including as applicable:

a. Name.
b. Device or sensor type (i.e., sensor, control relay, motors).
c. Point identification number.
d. Unit.
e. Building number.
f. Area.
g. Island.
h. DDC number and channel address.
i. KW (running).
j. KW (starting).
k. Sensor range.
l. Controller range.
m. Sensor span.
n. Controller span.
o. Engineering units conversion (scale factor).
p. Setpoint (analog).
q. High reasonableness value (analog).
r. Low reasonableness value (analog).
s. High alarm limit differential (return to normal).
t. Low alarm limit differential (return to normal).
u. High alarm limit (analog).
v. Low alarm limit (analog).
w. Alarm disable time period upon startup or change of setpoint.
x. Analog change differential (for reporting).
y. Alarm class and associated primary message text.
z. High accumulator limit (pulse).
aa. Status description.
bb. Run time target.
cc. Failure mode as specified and shown.
dd. Constraints as specified.

2.12.4 Alarm Processing

Each DDC shall have alarm processing software for AI, DI, and PA alarms for all real and virtual points connected to that DDC.

2.12.4.1 Digital Alarms Definition

Digital alarms are those abnormal conditions indicated by DIs as specified and shown.

2.12.4.2 Analog Alarms Definition

Analog alarms are those conditions higher or lower than a defined value, as measured by an AI. Analog readings shall be compared to predefined high and low limits, and alarmed each time a value enters or returns from a limit condition. Unique high and low limits shall be assigned to each analog point in the system. Analog alarm limits shall be stored in the DDC database. Each analog alarm limit shall have an associated unique limit differential specifying the amount by which a variable must return into the proper operating range before being annunciated as a return-to-normal-state. All limits and differentials shall be entered on-line by the operator in limits of the measured variable, without interruption or loss of monitoring of the point concerned. The program shall automatically change the high or low limits or both, of any analog point, based on time scheduled operations as specified, allowing for a time interval before the alarm limit becomes effective. In CPA applications, key the limit to a finite deviation traveling with the setpoint. The system shall automatically suppress analog alarm reporting associated with a digital point when that digital point is turned off.

2.12.4.3 Pulse Accumulator Alarms Definition

Pulse accumulator alarms are those conditions calculated from totalized values of accumulator inputs or PA input rates that are outside defined limits as specified and shown. PA totalized values shall be compared to predefined limits and alarmed each time a value enters a limit condition. Unique limits shall be assigned to each PA point in the system. Limits shall be stored in the DDC database.

2.12.5 Constraints

2.12.5.1 Equipment Constraints Definitions

Each control point in the database shall have DDC resident constraints defined and entered by the Contractor, including as applicable:

a. Maximum starts (cycles) per hour.
b. Minimum off time.
c. Minimum on time.
d. High limit (value in engineering units).
e. Low limit (value in engineering units).

2.12.5.2 Constraints Checks

Control devices connected to the system shall have the DDC memory resident constraints checked before each command is issued to insure that no equipment damage will result from improper operation. Each command shall be executed by the DDC only after all constraints checks have been passed. Each command point shall have unique constraints assigned. High and low "reasonableness" values or one differential "rate-of-change" value shall be

assigned to each AI. Values outside the reasonableness limits shall be rejected and an alarm message sent to the network control panel or portable workstation/tester. Status changes and analog point values shall be reported to the workstation upon operator request, such as for reports, alphanumeric displays, graphic displays, and application programs. Each individual point shall be capable of being selectively disabled by the operator from a workstation/tester. Disabling a point shall prohibit monitoring and automatic control of that point.

2.12.6 Diagnostics

Each DDC shall have self-test diagnostic routines implemented in firmware. The tests shall include routines that exercise memory. Diagnostic software shall be usable in conjunction with the central workstation/tester and portable workstation/tester. The software shall display messages in English to inform the tester's operator of diagnosed problems.

2.12.7 Summer-Winter Operation Monitoring

The system shall provide software to automatically change the operating parameters, monitoring of alarm limits, and start-stop schedules for each mechanical system from summer to winter and vice-versa. The software shall provide automatic commands to applications programs to coordinate proper summer or winter operation. Change over setpoints shall be operator selectable and settable.

2.12.8 Control Sequences and Control Loops

Sufficient memory shall be provided to implement the requirements specified and shown for each DDC. Specific functions to be implemented are defined in individual system control sequences and database tables shown in the drawings, and shall include, as applicable, the following:

a. PI Control: This function shall provide proportional control and proportional plus integral control.

b. wo Position Control: This function shall provide control for a two state device by comparing a set point against a process variable and an established deadband.

c. Floating Point Control: This function shall exercise control when an error signal exceeds a selected deadband, and shall maintain control until the error is within the deadband limits.

d. Signal Selection: This function shall allow the selection of the highest or lowest analog value from a group of analog values as the basis of control. The function shall include the ability to cascade analog values so that large numbers of inputs can be reduced to one or two outputs.

e. Signal Averaging: This function shall allow the mathematical calculation of the average analog value from a group of analog values as the basis of control. The function shall include the ability to "weight" the individual analog values so that the

function output can be biased as necessary to achieve proper control.

f. Reset Function: This function shall develop an AO based on up to two AIs and one operator specified reset schedule.

g. Cooling/Heating Operation Program: Software shall be provided to change, either automatically or on operator command, the operating parameters, monitoring of alarm limits, and start-stop schedules for each mechanical system where such a change from cooling to heating and vice versa is meaningful. The software shall provide commands to application programs to coordinate cooling or heating mode operation. Software shall automatically switch facilities from cooling to heating, and vice versa, based on schedules or temperatures. All HVAC equipment and systems shall be assigned to the program.

2.12.9 Command Priorities

A scheme of priority levels shall be provided to prevent interaction of a command of low priority with a command of higher priority. The system shall require the latest highest priority command addressed to a single point to be stored for a period of time longer than the longest time constraint in the on and off states, insuring that the correct command shall be issued when the time constraint is no longer in effect or report the rejected command. Override commands entered by the operator shall have higher priority than those emanating from applications programs.

2.12.10 Resident Application Software

The Contractor shall provide resident applications programs to achieve the sequences of operation, parameters, constraints, and interlocks necessary to provide control of the systems connected to the DDC system. Application programs shall be resident and shall execute in the DDC, and shall coordinate with each other, to insure that no conflicts or contentions remain unresolved. The Contractor shall coordinate the application programs specified with the equipment and controls operation, and other specified requirements. A scheme of priority levels shall be provided to prevent interaction of a command of low priority with a command of higher priority. The system shall require the latest highest priority command addressed to a single point to be stored for a period of time longer than the longest time constraint in the ON and OFF states, insuring that the correct command shall be issued when the time constraint is no longer in effect or the rejected command shall be reported. Override commands entered by the operator shall have higher priority than those emanating from application programs.

2.12.10.1 Program Inputs and Outputs

The Contractor shall select the appropriate program inputs listed for each application program to calculate the required program outputs. Where the specific program inputs are not available, a "default" value or virtual point appropriate for the equipment being controlled and the proposed sequence of operation shall be provided to replace the missing input, thus

allowing the application program to operate. AIs to application programs shall have an operator adjustable deadband to preclude short cycling or hunting. Program outputs shall be real analog or digital outputs or logic (virtual) points as required to provide the specified functions. The Contractor shall select the appropriate input and output signals to satisfy the requirements for control of systems as shown.

2.12.10.2 DDC General Conditions

The Contractor shall provide software required to achieve the sequences of operation, parameters, constraints, and interlocks shown. Application software shall be resident in the DDC in addition to any other required software. In the event of a DDC failure, the controlled equipment shall continue to function in the failure mode shown.

2.12.10.3 Scheduled Start/Stop Program

This program shall start and stop equipment based on a time of day schedule for each day of the week, and on a holiday schedule. To eliminate power surges, an operator adjustable time delay shall be provided between consecutive start commands.

a. Program Inputs:

(1) Day of week/holiday.
(2) Time of day.
(3) Cooling and heating high-low alarm limits.
(4) Cooling and heating start-stop schedules.
(5) Cooling or heating mode of operation.
(6) Equipment status.
(7) Equipment constraints.
(8) Consecutive start time delay.

b. Program Outputs: Start/stop signal.

2.12.10.4 Optimum Start/Stop Program

This program shall start and stop equipment as specified for the scheduled start/stop program, but shall include a sliding schedule based on indoor and outdoor air conditions. The program shall take into account the thermal characteristics of the structure, and indoor and outdoor air conditions, using prediction software to determine the minimum time of HVAC system operation needed to satisfy space environmental requirements at the start of the occupied cycle, and determine the earliest time for stopping equipment at the day's end without exceeding space environmental requirements. An adaptive control algorithm shall be utilized to automatically adjust the constants used in the program.

a. Program Inputs:

(1) Day of week/holiday.
(2) Time of day.
(3) Cooling or heating mode of operation.
(4) Equipment status.

(5) Cooling and heating building occupancy schedules.
(6) Space temperature.
(7) Building heating constant (operator adjustable and automatically optimized).
(8) Building cooling constant (operator adjustable and automatically optimized).
(9) OA temperature.
(10) Required space temperature at occupancy (heating).
(11) Required space temperature at occupancy (cooling).
(12) Equipment constraints.
(13) Cooling and heating high-low alarm limits.

b. Program Outputs: Start/stop signal.

2.12.10.5 Day-Night Setback Program

The software shall limit the rise or drop of space temperature (or specified fluid temperature) during unoccupied hours. Whenever the space temperature (or specified fluid temperature) is above (or below for heating) the operator assigned temperature limit, the system shall be turned on until the temperature is within the assigned temperature limit.

a. Program Inputs:

(1) Day of week.
(2) Time of day.
(3) Cooling or heating mode of operation.
(4) Cooling and heating occupancy schedules.
(5) Equipment status.
(6) Space temperature (or specified fluid temperature).
(7) Minimum space temperature (or specified fluid temperature) during unoccupied periods.
(8) Maximum space temperature (or specified fluid temperature) during unoccupied periods.
(9) Equipment constraints.

b. Program Outputs: Start/stop signal.

2.12.10.6 Economizer Program I

The software shall reduce the HVAC system cooling requirements when the OA dry bulb temperature is less than the return air temperature. When the OA dry bulb temperature is above the return air temperature or changeover setpoint, the OA dampers, return air dampers, and relief air dampers shall be positioned to provide minimum required OA. When the OA dry bulb temperature is below a changeover setpoint temperature, the OA dampers, return air dampers, and exhaust air dampers shall be positioned to maintain the required mixed air temperature.

a. Program Input:

(1) Changeover conditions.
(2) OA dry bulb temperature.
(3) RA dry bulb temperature.

(4) Mixed air dry bulb temperature.
(5) Equipment constraints.

b. Program Output: Damper actuator/cooling control signal.

2.12.10.7 Ventilation/Recirculation and Flush Programs

The software shall reduce the HVAC system thermal load for two modes of operation and provide for flushing of the building as follows:

a. Ventilation mode: In this mode, the system shall precool the space prior to building occupancy. When the outside air temperature is lower than the space temperature, the outside air damper and exhaust air damper shall open to their maximum positions and the return air damper shall close to its minimum position.

b. Recirculation mode: In this mode, the system shall preheat the space prior to building occupancy. When the outside air temperature is lower than the space temperature, the outside air damper and the exhaust air damper shall close to their minimum positions and the return air damper shall open to its maximum position.

c. Flush mode: The software shall use the HVAC supply system to provide 100% outside air for ventilation purpose and flush building spaces. The network control panel shall modulate the control valves to maintain the air supply temperature setpoints while the flush program is in effect. The flush mode shall be manually initiated and have the highest priority (it shall override all other programs). The outside air damper and the exhaust air damper shall be closed at other times during unoccupied periods, except for economizer operation during day/night setback periods. For systems without mechanical cooling, this program shall, in addition to the above requirements, act as an economizer. The outside, return, and exhaust air dampers shall be modulated to maintain the required mixed air temperature setpoint. When this program is released, the outside and exhaust air dampers shall return to their minimum positions, and the return air damper shall return to its maximum position.

d. Program Inputs:

(1) Day of week.
(2) Time of day.
(3) Cooling or heating mode of operation.
(4) Equipment status.
(5) Cooling and heating occupancy schedules.
(6) OA dry bulb temperature.
(7) Space temperature.
(8) Equipment constraints.

e. Program Output: Damper actuator control signal.

2.12.10.8 Reheat Coil Reset Program

The software shall select the zone with the least amount of heat required. The program shall reset the cold deck discharge temperature upward until it

satisfies the zone with the lowest demand, or until the zone humidity control requirements cannot be met.

a. Program Inputs:

(1) Zone RH high limit.
(2) Zone temperature (where shown).
(3) Zone RH (where shown).
(4) Cold deck temperature.
(5) Reheat coil valve positions or proportional signals from primary elements.
(6) Minimum space temperature during occupied periods.
(7) Maximum space temperature during occupied periods.
(8) Equipment constraints.

b. Program Output: Cold deck valve actuator control signal.

2.12.10.9 Heating and Ventilating Unit Program

The software shall control hot water/steam coil valve position to maintain space/supply air temperatures for heating and ventilating units. This program shall be coordinated with the ventilation-recirculation program for damper control and the scheduled or optimum start-stop program for fan control.

a. Program Inputs

(1) Space temperature.
(2) Space temperature setpoint.
(3) Supply air temperature.
(4) Supply air temperature setpoint.

b. Program Outputs

(1) Heating or steam coil valve actuator control signal.
(2) Damper actuator control signal.

2.12.10.10 Air Volume Control Program

The software shall monitor supply and return/exhaust air flow volumes and modulate fan controls to maintain required air flow volumes and/or ratio or fixed differential of supply to return air flows. This program shall be coordinated with the ventilation-recirculation program and the economizer program for damper control and with static pressure control requirements for fan control.

a. Program Inputs

(1) Supply air flow.
(2) Return/exhaust air flow.
(3) Required supply air flow - high and low limits.
(4) Required return/exhaust air flow - high and low limits.
(5) Volume offset or ratio, as appropriate.

b. Program Outputs

(1) Supply fan volume control.
(2) Return/exhaust fan volume control.

2.12.10.11 Air Distribution Unitary Controller Software

Software shall be provided for the management and control of the air distribution terminal units. Software shall allow for operator definition of multiple air distribution terminal units as functional groups which may be treated as a single entity; monitoring, alarming and reporting of terminal unit parameters on an individual or group basis; and remote setpoint adjustment on an individual or group basis.

a. Functions:

(1) Volume control in response to temperature.
(2) Volume flow limits, minimum and maximum.
(3) Occupied and unoccupied operation with associated temperature and volume limits.
(4) Temperature setpoint override.

b. Program Inputs

(1) Space temperature.
(2) Space temperature setpoint.
(3) Space temperature setpoint limits.
(4) Supply airflow volume.
(5) Supply airflow volume high and low limits.

c. Program Outputs

(1) Supply volume control signal.
(2) Auxiliary fan start/stop signal.
(3) Supplemental heat control signal.

2.12.10.12 Chiller Selection Program

Chiller program shall be used for chiller selection as well as control and monitoring of chillers. The software shall select the most efficient chiller or combination of chillers based on chiller operating data to satisfy the cooling load. Based on chiller operating data, energy input vs chilled water output, the chiller with the highest efficiency shall be selected to satisfy the cooling load calculated by prediction software. The program shall calculate equipment electrical energy input based on percent full load, current, or other inputs provided, and equipment nameplate data. The program shall prevent the chiller from going to full load for a predetermined period to allow the system to stabilize, in order to determine the actual cooling load. The program shall follow the chiller manufacturer's startup and shutdown sequence requirements. Interlocks between chilled water pumps, condenser water pumps, and chiller shall be in accordance with the chiller manufacturer's requirements.

a. Program Inputs

(1) Efficiency curves.
(2) Chiller water supply temperatures.
(3) Chiller water return temperatures.
(4) Chiller water flows.
(5) Entering condenser water temperatures.
(6) Leaving condenser water temperatures.
(7) Condenser water flows.
(8) Instantaneous KW to chillers.
(9) Instantaneous KW to chilled water pumps (if variable).
(10) Instantaneous KW to condenser water pumps (if variable).
(11) Instantaneous KW to cooling tower fans (if variable).
(12) Common chilled water supply temperatures.
(13) Common chilled water return temperatures.
(14) Total chilled water flow.
(15) Chilled water pumps status.
(16) Refrigerant pressure, suction and discharge.
(17) Equipment constraints.
(18) Steam flow.

b. Program Outputs

(1) Start/stop signals for chillers (manual or automatic to control panel).
(2) Start/stop signals for chilled water pumps (manual or automatic to control panel).
(3) Start/stop signals for condenser water pumps (manual or automatic to control panel).
(4) Start/stop signals for cooling tower fans (manual or automatic to control panel)
(5) Chilled water supply temperature setpoint control signal.
(6) Chiller efficiency.

2.12.10.13 Chilled Water Temperature Reset Program

The software shall reset the chilled water temperature supplied by a water chiller. The program shall reset the chilled water temperature upward or downward to meet the required space temperature or humidity setpoints. The program shall monitor the positions of the chilled water control valves (percent of opening) and space temperatures.

a. Program Input:

(1) Chilled water valve position.
(2) High limit for space dry bulb temperature.
(3) Chiller supply water temperature.
(4) High chilled water operating temperature.
(5) Low chilled water operating temperatur .
(6) High limit for space RH.
(7) Equipment constraints.

b. Program Output: Chilled water supply temperature setpoint control signal.

2.12.10.14 Condenser Water Temperature Reset Program

The software shall reset the condenser water temperature from a fixed temperature downward when the OA wet bulb temperature will produce lower condenser water temperature. Program shall be coordinated with the chiller control loop algorithms for chiller supply, return water temperatures and safety interlocks.

a. Program Inputs:

(1) Maximum condenser water operating temperature.
(2) Minimum condenser water operating temperature.
(3) Condenser water supply temperature.
(4) OA dry bulb temperature.
(5) OA RH.
(6) Condenser water cooling equipment thermal approach characteristics.
(7) Equipment constraints.

b. Program Output: Condenser water supply temperature setpoint control signal.

2.12.10.15 Chiller Demand Limit Program

The software shall limit maximum available chiller cooling capacity in fixed steps as shown to limit electrical demand. Each fixed step shall be considered as one point in the demand limiting program. Each chiller demand control step shall be assigned an equipment priority level.

a. Program Inputs:

(1) Chiller percent capacity.
(2) Minimum cooling capacity.
(3) Equipment priority schedules.
(4) Equipment constraints.

b. Program Output

(1) Calculated percent load point.
(2) Control signal to chiller controller/panel, new setpoint (manual or automatic as shown).

2.12.10.16 Hot Water OA Reset Program

The software shall reset the hot water temperature supplied by the boiler or converter in accordance with the OA temperature or other specified independent- dent variable. The hot water supply temperature shall be reset downward or upward from a fixed temperature proportionally, as a function of OA temperature or other specified independent variable.

a. Program Inputs

(1) Reset schedule.
(2) OA dry bulb temperature or other specified independent variable.

(3) Hot water supply temperature.
(4) Maximum hot water supply temperature.
(5) Minimum hot water supply temperature.
(6) Equipment constraints.

b. Program Output: Valve actuator control signal.

2.12.10.17 Hot Water Distribution Program

The software shall control the hot water distribution temperature to individual building zones. The zone hot water distribution temperature shall be reset downward or upward from a fixed temperature proportionally as a function of OA temperature or other specified independent variable by modulating the respective zone mixing valve. The zone pump shall be stopped when the OA temperature exceeds the specified setpoint. When parallel pumps are used, the software shall alternate pump operation and shall start the standby pump (after a time delay) upon failure of the operating pump.

a. Program Inputs

(1) Zone hot water distribution temperature.
(2) Reset schedule.
(3) OA dry bulb temperature or other specified independent variable.
(4) Maximum zone hot water distribution temperature.
(5) Zone pump status.
(6) Equipment constraints.

b. Program Outputs

(1) Zone mixing valve control.
(2) Zone pump start/stop signal(s).

2.12.10.18 Domestic Hot Water Generator Program

The software shall control the domestic hot water temperature by adjusting the hot water heating control valve.

a. Program Inputs

(1) Domestic hot water temperature.
(2) Domestic hot water temperature setpoint.

b. Program Output: Hot water heating control valve actuator control signal.

2.12.10.19 Lighting Control Program

The software shall turn lights on and off based on the time of day and the day of week, including holidays. The program shall generate additional commands at operator adjustable intervals to assure that lights are off (relay operated zoned lighting only).

a. Program Inputs

(1) Day of week-holiday.
(2) Time of day.
(3) Cooling and heating start-stop schedules.
(4) Equipment status.
(5) Times of day for additional off commands (where applicable).

b. Program Output: On/off signal.

2.13 COMMUNICATIONS EQUIPMENT

The DDC panel shall be equipped with hardware to allow for communication over Data Transmission Media (DTM) using the communication network as shown. New DDC panels shall be connected to the EMCS Fiber network in the building.

2.13.1 Control Devices and Accessories

Except when otherwise specified, control devices and accessory input impedance shall not exceed 250 ohms. All relays used to start/stop motors shall have 24 VAC coil.

Approved Control Components for EMCS and HVAC Control System

Item	Description	Manufacturer	Part No.
1	Electric to Pneumatic Transducer	Bellofram Mamac Control Air Inc.	Type 1000 EP-310 Type 500X
2	Electric Solenoid Pneumatic Valve	ASCO Penn-Baso ITT	Model 8320 V11-H**-100 K13 Series
3	P/E Transducer	Setra Dwyer Mamac	280-E Series 600 PR-242
4	Static Pressure Transmitter	Setra Modus Dwyer	C-264 T30 Series 607
5	P-E Switch	Johnson Ashroft Robershaw	P10EC-7 B400 PC-100
6	DP Switch (Air)	Dwyer Mamac Robershaw	1823-* PR-272 PC301
7	DP Switch (Liquid)	Penn-Basco Mamac Robershaw	P74FA-1 PR-282 PF-126

Approved Control Components for EMCS and HVAC Control System

Item	Description	Manufacturer	Part No.
8	Current Relay	Cutter Hammer Penn-Basco Hawkeye	Series D60 R10A H-701
9	Control Relay (2PDT) 24 VAC	Midtex Magnecraft Allen Bradley	158DPDT Class 250 700 Series
10	Status Relay (120V)	Midtex Magnecraft Allen Bradley	158DPDT Class 250 700 Series
11	H.O.A.	Alcoswitch Square D Allen Bradley	RM230 Class 9001 800T & 44B
12	Enclosures Neam-1, 4 and 12	Austin Electromate Electro-Fab	AB** E-*** E12A
13	Resistor Temperature Detector (RTD) Transmitter and Averaging RTD (space, QA, duct, hw/c & ch water)	Hycal Mamac Automation Comp Inc.	RTS-4205/CT-807 TE-205/210 TT100 Series
14	Humidity Detectors	Hycal Mamac Automation Comp Inc.	CT-827 HU-222 RH5
15	VAV Box Control	ASI Control Systems Int'l. American Auto Matrix	1-8015 7210 Solo/Tx

PART 3 EXECUTION

3.1 GENERAL INSTALLATION CRITERIA

3.1.1 HVAC Control System

The HVAC control system shall be completely installed and ready for operation. Dielectric isolation shall be provided where dissimilar metals are used for connection and support. Penetrations through and mounting holes in the building exterior shall be made watertight. The HVAC control system installation shall provide clearance for control system maintenance by maintaining access space between coils, access space to mixed-air plenums, and other access space required to calibrate, remove, repair, or replace control system devices. The control system installation shall not interfere with the clearance requirements for mechanical and electrical

system maintenance.

3.1.2 Software Installation

Software shall be loaded for an operational system, including databases for all points, operational parameters, and system, command, and application software. The Contractor shall provide original and backup copies of source, excluding the general purpose operating systems and utility programs furnished by computer manufacturers and the non-job-specific proprietary code furnished by the system manufacturer, and object modules for software on each type of media utilized, within 30 days of formal Government acceptance. In addition, a copy of individual floppy disks of software for each DDC panel shall be provided.

3.1.3 Device Mounting Criteria

Devices mounted in or on piping or ductwork, on building surfaces, in mechanical/electrical spaces, or in occupied space ceilings shall be installed in accordance with manufacturer's recommendations and as shown. Control devices to be installed in piping and ductwork shall be provided with required gaskets, flanges, thermal compounds, insulation, piping, fittings, and manual valves for shutoff, equalization, purging, and calibration. Strap-on temperature sensing elements shall not be used except as specified.

3.1.4 Wiring Criteria

Wiring external to control panels, including low-voltage wiring, shall be installed in metallic raceways. Nonmetallic-sheathed cables or metallic-armored cables may be installed in areas permitted by NFPA 70 Wiring shall be installed without splices between control devices and DDC panels. Instrumentation grounding shall be installed as necessary to prevent ground loops, noise, and surges from adversely affecting operation of the system. Ground rods installed by the contractor shall be tested as specified in IEEE Std 142. Cables and conductor wires shall be tagged at both ends, with the identifier shown on the shop drawings. Electrical work shall be as specified in Section 16415 ELECTRICAL WORK, INTERIOR and as shown.

3.2 CONTROL SYSTEM INSTALLATION

3.2.1 Damper Actuators

Actuators shall not be mounted in the air stream. Multiple actuators operating a common damper shall be connected to a common drive shaft. Actuators shall be installed so that their action shall seal the damper to the extent required to maintain leakage at or below the specified rate and shall move the blades smoothly.

3.2.2 Local Gauges for Actuators

Pneumatic actuators shall have an accessible and visible receiver gauge installed in the tubing lines at the actuator as shown.

3.2.3 Room Instrument Mounting

Room instruments shall be mounted so that their sensing elements are 5 feet above the finished floor unless otherwise shown. Temperature setpoint device shall be recess mounted.

3.2.4 Freezestats

For each 20 square feet of coil face area, or fraction thereof, a freezestat shall be provided to sense the temperature at the location shown. Manual reset freezestats shall be installed in approved, accessible locations where they can be reset easily. The freezestat sensing element shall be installed in a serpentine pattern.

3.2.5 Averaging Temperature Sensing Elements

Sensing elements shall have a total element minimum length equal to 1 linear foot per square foot of duct cross-sectional area.

3.2.6 Duct Static Pressure Sensing Elements and Transmitters

The duct static pressure sensing element and transmitter sensing point shall be located at 75% to 100% of the distance between the first and last air terminal units.

3.2.7 Indication Devices Installed in Piping and Liquid Systems

Gauges in piping systems subject to pulsation shall have snubbers. Gauges for steam service shall have pigtail fittings with cock. Thermometers and temperature sensing elements installed in liquid systems shall be installed in thermowells.

3.3 CONTROL SEQUENCES OF OPERATION

3.3.1 General Requirements - HVAC Systems

These requirements shall apply to all primary HVAC systems unless modified herein. The sequences describe the actions of the control system for one direction of change in the HVAC process analog variable, such as temperature, humidity or pressure. The reverse sequence shall occur when the direction of change is reversed.

3.3.1.1 Supply Fan Operating

HVAC system outside air, return air, and relief air dampers shall function as described for specific modes of operation unless control of the dampers is assumed by the fire and smoke control system. Smoke dampers shall open before fans are allowed to start. Interlocked exhaust fans shall be stopped in the unoccupied and ventilation delay modes and their dampers shall be closed. Interlocked exhaust fans shall run in the occupied mode, and their dampers shall open. Cooling coil control valves and cooling coil circulating pumps shall function as described for the specific modes of operation unless their control is assumed by the freeze protection system. Heating coil valves shall be under control.

3.3.1.2 Supply Fan Not Operating

When an HVAC system is stopped, all interlocked fans shall stop, the smoke dampers shall close, the outside air and relief air dampers shall close, the return air damper shall open, all stages of direct-expansion cooling shall stop, the system shall pump down if it has a pump down cycle, humidification shall stop, and cooling coil valves for coils located indoors shall close to the coil. Cooling coil valves of units located outdoors shall open to the coil. Heating coil valves shall remain under control.

3.3.1.3 Hydronic Heating - Distribution Pump Operating

Hydronic heat-exchanger valves shall be under control.

3.3.1.4 Hydronic Heating - Distribution Pump Not Operating

Hydronic heat-exchanger valves shall close.

3.3.2 Unit Heater and Cabinet Unit Heater

All Modes - A wall-mounted thermostat with an "AUTO-OFF" switch located as shown, shall cycle the fan to maintain its setpoint as shown when the switch is in the "AUTO" position. When the switch is in the "OFF" position, the fan shall be stopped.

3.3.3 Heating and Ventilating Unit

Applies to HV-15, HV-17, HV-20, HV-21, HV-22, HV-23, HV-24, HV-27, HV-28, and RF-15, RF-17, RF-20, RF-21, RF-22, RF-23, RF-24, RF-25, RF-27, RF-28.

3.3.3.13.3.3.1 Occupied, Unoccupied, and Ventilation-Delay Operating Modes

Ventilation-delay mode timing shall start prior to the occupied mode timing. The DDC system shall prevent the outside air damper from opening. At the time shown, the DDC system shall place the system in the occupied mode. At the expiration of the ventilation-delay mode timing period, the DDC system shall allow the outside air damper to open. At the time shown, the DDC system shall place the control system in the unoccupied mode of operation.

3.3.3.2 Outside Air, Return Air, and Relief Air Dampers

Occupied Mode - The outside air, return air, and relief air dampers shall be under space temperature and economizer control.

Unoccupied and Ventilation-Delay Modes - The dampers shall return to their normal positions.

3.3.3.3 Supply Fan Control

Occupied and Ventilation-Delay Modes - Supply fan shall start, and shall operate continuously.

Unoccupied Mode - The supply fan shall cycle according to the night setback schedule. The fan shall start and stop at the setpoints as shown.

3.3.3.4 Filter

The DDC panel shall monitor the differential pressure switch across each filter (one for 30% pre-filter and one for 85% final filter) and shall provide an alarm when the pressure drop exceeds the setpoint.

3.3.3.5 Freeze Protection

All Modes - A freezestat, located in the casing, downstream of the preheat coil, shall stop the supply fan, cause the outside air, return a air, and relief air dampers to return to their normal position, and shall initiate a low-temperature alarm if the temperature drops below the freezestat's setpoint. Return to the normal mode of operation shall require manual reset at the freezestat. The DDC panel shall monitor the freezestat through auxiliary contacts and shall indicate an alarm condition when the freezestat trips.

3.3.3.6 Space Temperature Control

A space temperature sensing element and transmitter operating through the DDC system shall first gradually shut off the heating-coil valve. After passing through a dead band, the DDC system shall then gradually operate the outside air damper to admit outside air beyond the minimum quantity to maintain the setpoint as shown.

3.3.3.7 CO2 Control:

When the unit is in the occupied mode a C02 sensor in the return air duct to the unit shall sense the level of C02 in the return air stream. When the C02 level in as read by the sensor falls below an adjustable set point of 600 parts per million (ppm) for an adjustable time period of 5 minutes the outside air and the relief air dampers shall modulate to reduce the amount of fresh air delivered to the space. The outside air damper shall close by 10%, the relief air damper shall modulate open the corresponding amount and the system will remain in that position for an adjustable period of 5 minutes. If the C02 level continues to be below 600 ppm for an adjustable time period of 5 minutes the outside air shall be reduced again, however, in no case shall the outside air go below 10% of the total supply air quantity.

1. When the C02 level rises above 800 ppm for an adjustable time period of 5 minutes the outside air damper shall open and the relief air damper shall close by 10% to increase the outside air flow to the building. The sequence shall continue until the design outside air level has been reached as indicated on the equipment schedule.

2. Each air handling system shall be provided with an electronic air flow monitoring station in outside air intake to the unit which will ensure that the outside air flow to the air handling unit is

maintained between the parameters stated in the sequence.

3.3.3.8 Return Fan Interlock

Occupied mode - return fan shall start' and shall operate continuously.

Unoccupied mode - the return fan shall cycle with the supply fan according to the night setback schedule.

3.3.3.9 Glycol Heat Recovery

For each air handling system provided with a heat recovery system the DDC system shall control the three way valves as described below.

1. When the air handling units are in the occupied cycle the glycol recovery system will be enabled.

2. When the air handling system is in the minimum outside air mode (ie: not in the ventilation cycle) the pumps for the glycol recovery system shall run continuously circulating water from the coil in the outside air intake to the coil in the relief air duct. When the relief air damper and the outside air damper are open beyond the minimum outside air position (ie the Unit is in the ventilation cycle) the three way valve shall close to the system not allowing glycol into the coil in the relief duct for a minimum adjustable time period of 5 minutes.

3. A duct dew point sensor in the relief air duct upstream of the glycol heating coil shall monitor the dew point of the air in the relief duct.

4. An immersion temperature sensor in the glycol piping system downstream of the recovery coil in the outside air intake shall monitor the temperature of the glycol being circulated to the coil in the relief duct.

5. A three way mixing valve shall be modulated to maintain the temperature of the glycol entering the recovery coil in the relief duct to avoid condensation on the recovery coil in the relief duct.

3.3.3.10 All Modes

Smoke detectors in the supply and return air ductwork as located on the Drawings shall stop the supply and return fans and initiate a smoke alarm if smoke is detected at any detector. Restarting the supply and the return fan shall require manual reset at the smoke detector.

3.3.4 Single Zone Cooling and Heating Unit AHU-34 and RF-34

3.3.4.1 Occupied, Unoccupied, and Ventilation-Delay Operating Modes

Ventilation-delay mode timing shall start prior to the occupied mode timing. The DDC system shall prevent the outside air damper from opening. At the time shown, the DDC system shall place the system in the occupied

mode. At the expiration of the ventilation-delay mode timing period, the DDC system shall allow the outside air damper to open. At the time shown, the DDC system shall place the control system in the unoccupied mode of operation.

3.3.4.2 Outside Air, Return Air, and Relief Air Dampers

Occupied Mode - The outside air, return air, and relief air dampers shall be under space temperature and economizer control.

Unoccupied and Ventilation-Delay Modes - The dampers shall return to their normal positions.

3.3.4.3 Supply Fan Control

Occupied and Ventilation-Delay Modes - Supply fan shall start, and shall operate continuously.

Unoccupied Mode - The supply fan shall cycle according to the night setback schedule. The fan shall start and stop at the setpoints as shown.

3.3.4.4 Filter

The DDC panel shall monitor the differential pressure switch across each filter (one for 30% prefilter and one for 85% final filter) and shall provide an alarm when the pressure drop exceeds the setpoint.

3.3.4.5 Freeze Protection

All Modes - A freezestat, located on the downstream face of the cooling coil, shall stop the supply fan, cause the outside air, return air, and relief air dampers to return to their normal position, and shall initiate a low-temperature alarm if the temperature drops below the freezestat's setpoint. Return to the normal mode of operation shall require manual reset at the freezestat. The DDC panel shall monitor the freezestat through auxiliary contacts and shall indicate an alarm condition when the freezestat trips.

3.3.4.6 Space Temperature Control

A space temperature sensing element and transmitter operating through the DDC system shall first gradually shut off the heating-coil valve. After passing through a deadband, the DDC system shall then gradually operate the outside air damper to admit outside air beyond the minimum quantity under economizer control, as described below, to maintain the setpoint as shown. When the return air temperature falls below the outside air temperature the unit will enter the minimum outdoor air mode.

3.3.4.7 Cooling Coil

Occupied and Ventilation-Delay Modes - Cooling coil valve shall be modulated from the signal of a temperature-sensing element and transmitter located in the coil discharge air to maintain the setpoint as shown.

Unoccupied Mode - Cooling shall be off.

3.3.4.8 Economizer Control

The DDC system shall accept the signal of an outside air temperature sensing element and transmitter and the signal of a return air temperature sensing element and transmitter. The DDC system shall perform switchover between outside air economizer control mode and minimum outside air mode. Until the return air temperature rises above the setpoint, the DDC system shall hold the system in the minimum outside air mode. When the return air temperature rises above the setpoint, the DDC system shall place the AHU in the economizer mode or in the minimum outside air mode, as determined by] comparison of the outside air and return air temperatures in accordance with the differential temperature setpoints. When the outside air temperature is low with respect to the return air temperature, the AHU shall be in the economizer mode. When the DDC system places the control system in the minimum outside air mode, the outside air damper shall be open to the minimum outdoor air setting.

3.3.4.9 CO2 Control

When the unit is in the occupied cycle a C02 sensor in the return air duct to the unit shall sense the level of of C02 in the return air stream. When the C02 level in as read by the sensor falls below 600 parts per million (ppm) for an adjustable time period of 5 minutes the outside air and the relief air dampers shall modulate to reduce the amount of fresh air delivered to the space. The outside air damper shall close by 10%, the relief air damper shall modulate open the corresponding amount and the system will remain in that position for an adjustable period of 5 minutes. If the C02 level continues to be below 600 ppm for an adjustable time period of 5 minutes the outside air shall be reduced again, however, in no case shall the outside air go below 10% of the total supply air quantity.

1. When the C02 level rises above 800 ppm for an adjustable time period of 5 minutes the outside air damper shall open and the relief air damper shall close by 10% to increase the outside air flow to the building. The sequence shall continue until the design outside air level has been reached as indicated on the equipment schedule.

2. Each air handling system shall be provided with an air flow monitoring station in outside air intake to the unit which will ensure that the outside air flow to the air handling unit is maintained between the parameters stated in the sequence. The air monitoring station shall be capable of providing a reading of +/-5% when installed in a total length of 24 inches and at a minimum duct velocity of 50 FPM.

3.3.4.10 Return Fan Interlock

Occupied mode - return fan shall start, and shall operate continuously.

Unoccupied mode - the return fan shall cycle with the supply fan according to the night setback schedule.

3.3.4.12 Glycol Heat Recovery

For each air handling system provided with a heat recovery system the DDC system shall control the three way valves as described below.

1. When the air handling units are in the occupied cycle the glycol recovery system will be enabled.

2. When the air handling system is in the minimum outside air mode (ie: not in the ventilation cycle) the pumps for the glycol recovery system shall run continuously circulating water from the coil in the outside air intake to the coil in the relief air duct. When the relief air damper and the outside air damper are open beyond the minimum outside air position (ie the unit is in the ventilation cycle) the three way valve shall close to the system not allowing glycol into the coil in the relief duct for a minimum adjustable time period of 5 minutes.

3. A duct dew point sensor in the relief air duct upstream of the glycol heating coil shall monitor the dew point of the air in the relief duct.

4. An immersion temperature sensor in the glycol piping system downstream of the recovery coil in the outside air intake shall monitor the temperature of the glycol being circulated to the coil in the relief duct.

5. A three way mixing valve shall be modulated to maintain the temperature of the glycol entering the recovery coil in the relief duct to avoid condensation on the recovery coil in the relief duct.

3.3.4.11 All Mode

Smoke detectors in the supply and return air ductwork as located on the Drawings shall stop the supply and return fans and initiate a smoke alarm if smoke is detected at any detector. Restarting the supply and the return fan shall require manual reset at the smoke detector.

3.3.5 Electric Unit Heater

1. A DDC room sensor shall read the space temperature.

2. When the space temperature falls below 60 deg. F. adj, the DDC system shall start the fan and stage the electric heating coil in the unit heater.

3. When the space temperature rises above 65 deg. F. the fan shall be shut down and the electric heating coil shall be de-energized.

3.3.6 Room Ventilation (Two Fan Systems)

1. A DDC room sensor shall read the space temperature.

2. When the space temperature rises above 80 deg. F. the DDC system shall open the outside air damper on the supply fan and the exhaust fan.

3. When the damper associated with a particular fan is proven to be open via a damper end switch the associated fan shall start.

4. When the space temperature falls below 75 deg. F. adj. The reverse shall occur and the fans shall remain off for a minimum of 5 minutes.

3.3.7 Other Exhaust Systems

1. When the cadet Locker Room is in the occupied mode the DDC system shall open the outside air damper on the exhaust system.

2. When the outside far damper is proven open via a damper end switch the associated fan shall start.

3. The new locker room fan will be provided with ah heat recovery system which will interface with existing heat recovery coils in the air handling units serving the locker room. The heat recovery shall be controlled as described below.

4. When the air handling units are in the occupied cycle the glycol recovery system will be enabled.

5. When the air handling system is in the minimum outside air mode (ie: not in the ventilation cycle) the pumps for the glycol recovery system shall be started and will run continuously circulating water from the coil in the outside air intake to the coil in the relief air duct. When the relief air damper and the outside air damper are open beyond the minimum outside air position (ie the unit is in the ventilation cycle) the pumps for the glycol heat recovery pumps shall be stopped and remain off for a minimum adjustable time period of 5 minutes.

6. A duct dew point sensor in the relief air duct upstream of the glycol heating coil shall monitor the dew point of the air in the relief duct.

7. An immersion temperature sensor in the glycol piping system downstream of the recovery coil in the outside air intake shall monitor the temperature of the glycol being circulated to the coil in the relief duct.

8. A two way mixing valve shall be modulated to maintain the temperature of the glycol entering the recovery coil in the relief duct to avoid condensation on the recovery coil in the relief duct.

3.3.8 Steam to Hot Water Systems

(P-7, P-8, P-9, HX-1, HX-2 and P-14, P-15, P-16, HX-3, HX-4) Typical for two systems

1. Control of this system shall be via DDC system.

2. Pump P-7 shall be started and stopped from the DDC system. In the event that P-7 fails to start, DDC shall start Pump P-8 and send no flow alarm Pump P-7 alarm to DDC. When the hot water supply temperature falls below set point (190 F adj) the DDC system shall start pump P-8. In the event of a failure of either pump P-7 or P-8 the DDC system shall start pump P-9. The DDC system shall alternate operation of Pumps P-7, P-8 and P-9 to maintain uniform operating hours.

3. Heating pumps shall be operating continuously whenever the outside air temperature is 60 degrees F (adjustable) or less.

4. A temperature sensor in the hot water supply line after each Heat Exchanger shall modulate in sequence the steam controls valves (low flow 1/3; high flow 2/3 of total steam capacity) for HX-1 and HX-2 to maintain the hot water supply temperature at 190 degrees F. In the event, of failure of either heat exchanger to maintain system supply temperature, send alarm to the DDC system.

5. Pressure differential sensors (final location to be determined in field by Engineer) shall modulate pressure differential valve to maintain system pressure.

6. The above sequence shall apply to pumps P-14, P-15, P-16 and HX-3 and HX-4.

POINTS LIST

Point Description	DO	DI	AI	AO
SYSTEM 1				
Pump P7 S/S/S	X	X		
Pump P8 S/S/S	X	X		
Pump P9 S/S/S	X	X		
HX-1 1/3 steam valve				X
HX-1 2/3 steam valve				X
HX-2 1/3 steam valve				X
HX-2 2/3 steam valve				X
HWS Temp			X	
HWR Temp			X	
Pressure Differential			X	
Pressure Differential Valve				X
SYSTEM 2				
Pump P14 S/S/S	X	X		
Pump P15 S/S/S	X	X		
Pump P16 S/S/S	X	X		
HX-3 1/3 steam valve				X
HX-3 2/3 steam valve				X

POINTS LIST

Point Description	DO	DI	AI	AO
HX-4 1/3 steam valve				X
HX-4 2/3 steam valve				X
HWS Temp			X	
HWR Temp			X	
Pressure Differential			X	
Pressure Differential Valve				X

3.3.9 Variable Air Volume Control Sequence with Return Fan

AHU-32, AHU-33, AHU-35, and RF-32, RF-33, and RF-35.

3.3.9.1 Occupied, Unoccupied, and Ventilation Delay Modes of Operation

Ventilation delay mode timing shall start prior to the occupied mode timing. During ventilation delay mode, the dampers shall remain in their normal positions as shown, except when under economizer control. At the time shown, the DDC system shall place the system in the occupied mode. At the expiration of the ventilation delay mode timing period, the DDC system shall place the minimum outside air damper under minimum outside air flow control and shall place the economizer outside air, return air, and relief air dampers under economizer and mixed air temperature control. At the time shown, the DDC system shall place the control system in the unoccupied mode of operation and dampers shall return to their normal positions as shown.

3.3.9.2 Fan Control

a. Occupied and Ventilation Delay Modes - Supply fan and return fan shall operate continuously.

b. Unoccupied Mode - The supply fan and the return fan shall cycle according to the night setback schedule. The fans shall start and stop at the setpoints as shown.

3.3.9.3 Supply Duct Pressurization Control

When the supply fan starts, the DDC system shall modulate the supply fan variable frequency drive from the signal of a static pressure sensing element and transmitter to maintain the setpoint as shown. A high limit static pressure switch in the fan discharge shall stop the supply fan and the return fan and initiate a high static alarm when the static pressure exceeds the setpoint.

3.3.9.4 Return Fan Volume Control

When the return fan starts, the DDC system shall modulate the return fan variable frequency drive from the signals of an air flow measurement station and transmitter in the return air ductwork, in combination with an air flow measurement station and transmitter in the supply air ductwork, to

maintain a constant difference between supply air and return air flow rates as shown.

3.3.9.5 Filters

A differential pressure switch across each filter (one for 30% prefilter and one for 85% final filter) shall initiate a filter alarm when the pressure drop across the filter reaches the setpoint as shown.

3.3.9.6 Freeze Protection

A freezestat, located as shown, shall stop the supply and return fans, cause the outside air, return air, and relief air dampers to return to their normal position, and shall initiate a low temperature alarm if the temperature drops below the freezestat's setpoint as shown. The DDC system shall monitor the freezestat through auxiliary contacts and shall indicate an alarm condition when the freezestat trips.

3.3.9.7 Cooling Coil Control

a. Occupied and Ventilation Delay Modes - The cooling coil control valve shall be modulated by the DDC system from the signal of a temperature sensing element and transmitter located in the coil discharge air to maintain the setpoint as shown.

b. Unoccupied Mode - The cooling coil control valve shall remain closed.

3.3.9.8 Minimum Outside Air Flow Control

a. Occupied Mode - The minimum outside air damper shall be modulated to maintain the minimum outside air flow at setpoint, as sensed by an air flow measurement station located in the minimum outside air duct.

b. Unoccupied and Ventilation Delay Modes - The minimum outside air damper shall remain closed.

3.3.9.9 Economizer and Mixed Air Temperature Control

The DDC system shall accept the signal of an outside air temperature sensing element and transmitter and the signal of a return air temperature sensing element and transmitter. When the return air temperature is above the economizer setpoint, and the outside air temperature is sufficiently below the return air temperature to be effective for cooling, the DDC system shall place the AHU in the economizer mode by modulating the economizer outside air, relief air, and the return air dampers to maintain the mixed air temperature at setpoint. As the economizer outside air and relief air dampers open, the return air damper closes. When the system is not in economizer mode, the economizer outside air and relief air dampers shall remain closed and the return air damper shall remain open.

3.3.9.10 Pressure Independent Terminal VAV Box with Velocity Controller

All Modes - The control damper of the VAV box shall modulate in response to the signal from a flow sensing element at the inlet of the VAV box to a

microprocessor based VAV box velocity controller. The velocity controller shall control the box damper from the minimum flow position to the full flow position from the signal of a space temperature sensing element located as shown. When the space temperature decreases, the damper shall gradually close to the minimum flow position to maintain the cooling setpoint as shown. When the space temperature calls for heating after the minimum flow position is reached, control shall then pass through a temperature dead band as shown. When the space temperature has dropped through the dead band, the duct heater coil shall be gradually controlled to maintain the heating setpoint as shown.

3.3.9.11 Glycol Heat Recovery

For each air handling system provided with a heat recovery system the DDC system shall control the three way valves as described below.

1. When the air handling units are in the occupied cycle the glycol recovery system will be enabled.

2. When the air handling system is in the minimum outside air mode (ie: not in the ventilation cycle) the pumps for the glycol recovery system shall run continuously circulating water from the coil in the outside air intake to the coil in the relief air duct. When the relief air damper and the outside air damper are open beyond the minimum outside air position (ie the unit is in the ventilation cycle) the three way valve shall close to the system not allowing glycol into the coil in the relief duct for a minimum adjustable time period of 5 minutes.

3. A duct dew point sensor in the relief air duct upstream of the glycol heating coil shall monitor the dew point of the air in the relief duct.

4. An immersion temperature sensor in the glycol piping system downstream of the recovery coil in the outside air intake shall monitor the temperature of the glycol being circulated to the coil in the relief duct.

5. A three way mixing valve shall be modulated to maintain the temperature of the glycol entering the recovery coil in the relief duct to avoid condensation on the recovery coil in the relief duct.

3.3.9.12 Emergency Fan Shutdown

All Modes - Smoke detectors in the supply air and return air ductwork as located on the Drawings shall stop the supply fan and the return fan and initiate a smoke alarm if smoke is detected at either location. Restarting the supply fan and the return fan shall require manual reset at the smoke detector.

3.3.10 Control System - Differential Bypass Valves on Chilled Water

(Similar for Hot Water)

Provide differential bypass valve or valves at chiller plant to maintain constant differential pressure with sensors halfway down piping system.

3.3.10.1 Points List

POINTS LIST

Points Descriptio	Point Type			
	DO	DI	AI	AO
Pressure Differential Valve				X
Pressure Sensor			X	

3.3.11 Refrigeration Plant RM-1 and RM-2 and Pumps P-1 through P-6

1. A control package for parallel operation of the two (2) refrigeration machines shall be provided. The control package will:

a. Start and stop each chilled water pump.
b. Start and stop each condenser water pump.
c. Start cooling tower control sequence.
d. Open and close automatic two (2) way valve in chilled water and condenser water supply pipes to each machine.
e. Load and unload refrigeration machines to maintain leaving chilled water temperature.
f. Automatic lead-lag refrigeration machines.

2. The Contractor shall provide all of the control wiring between refrigeration machines, pumps and cooling tower starters, temperature sensors etc for a fully operational system.

3. The Automatic Temperature Control Contractor shall also provide flow switches and associated control wiring in chilled and condenser water pump discharges to "prove" water flow to allow respective refrigeration machine to start and automatic two (2) position valves in chilled water and condenser water lines to each refrigeration machine.

4. The Contractor shall provide the following through an RS 232 connection between the DDC system and the Chiller Communication Panel:

a. Start sequence signal to refrigeration machine control package.
b. Status of each chilled water pump.
c. Status of each condenser water pump.
d. Monitor chilled water leaving temperature from each refrigeration machine.
e. Reset leaving chilled water temperature.
f. Start and stop spare water pumps.
g. No flow alarms.

5. Signal from refrigeration machine control package shall start chilled water and condenser water pumps and open automatic two (2) way valves to 100% open prior to starting pumps.

6. In the event of failure to either P-4 Or P-5 Pump P-6 shall start and no flow alarm shall be sent to B.M.S. BMS shall alternate operation of P-4, P-5 and P-6 to provide uniform equipment life. In the event of failure to either P-1 Or P-2 Pump P-3 shall start and no flow alarm shall be sent to B.M.S. BMS shall alternate operation of P-1, P-2 and P-3 to provide uniform equipment life.

Points List

Point Description	DO	DI	AI	AO
REFRIGERATION PLANT:				
Refrigeration Machine S/S/S (Each Machine)	X(2)	X(2)		
Status P-1	X			
Status P-2	X			
Status P-3	X			
Status P-4	X			
Status P-5	X			
Status P-6	X			
Chilled Water Supply Temperature			X	
Chilled Water Flow (each machine)		X(2)		
Condenser Water Flow (each machine)		X(2)		

Note: Numbers in parenthesis ( ) indicate quantity.

3.3.12 Condenser Water Control (Cooling Tower)(CT-1 and CT-2)

1. A temperature sensor in the condenser water supply main (located upstream of the diverting valve by-pass connection) shall through the DDC Controller control the cooling tower fans. When the condenser water temperature rises above 80 degrees F, cooling tower fans (2 fans) shall start and operate at low speed. On a continued rise in condenser water temperature above 85 degrees F, the fans shall operate at high speed. On a drop in condenser water temperature, the reverse shall occur. As the cooling tower fans are started, on either low or high speed, the fan shall operate at the speed (high or low) for a minimum of 10 minutes (adjustable). A low limit temperature sensor in the condenser water supply main (located downstream of diverting valve by-pass connection) set at 65 degrees F summer; shall, through the stand-alone DDC controller, modulate three (3) way diverting valve to maintain its setting.

2. For each cooling tower cell provide basin low temperature and low water alarm.

3. Each cooling tower cell shall be provided with an electronic water level sensor (furnished by the cooling tower manufacturer) to monitor the water level in each cooling tower cell basin and signal an automatic cold water make-up valve (located in the building) to open and supply make-up water to maintain basin water level. The Contractor shall provide the cold water make-up valve and provide all control and power wiring between water level sensors and the make-up water valve.

Points List

Point Description	DO	DI	AI	AO
CONDENSER WATER CONTROL (CT-1):				
Temperature Sensor CWS			X	
Cooling Tower Fan No. 1 Low Speed	X			
Cooling Tower Fan No. 2 Low Speed	X			
Cooling Tower Fan No. 1 High Speed	X			
Cooling Tower Fan No. 2 High Speed	X			
Low Temperature Sensor (each basin)			X(2)	
Diverting Valve				X
Alarm Low Basin Water Level No. 1		X		
Alarm Low Basin Water Level No. 2		X		
Alarm Low Basin Water Temp. No. 1			X	
Alarm Low Basin Water Temp. No. 2			X	

Note: Numbers in parenthesis ( ) indicate quantity.

3.3.13 Refrigeration Leak Detection System

1. A room refrigerant leak detection system (provided by Automatic Temperature Control Contractor) shall when a refrigerant leak is detected:

- Air Handling Unit shall start at high speed and outside air intake damper shall open.
- Relief air dampers shall open.
- Activate a local alarm bell in mechanical room and send alarm signal to BMS.
- Unit isolation smoke damper shall open.

2. The Automatic Temperature Control Contractor shall coordinate with the HVAC Contractor and the successful refrigeration machine manufacturer to determine the location and quantity of refrigerant sensors required. Automatic Temperature Control Contractor shall provide and wire local alarm

bell.

3. Whenever the equipment room is occupied as determined by a room occupancy sensor (5 required), Air Handling Unit and relief air damper shall start on low speed and respective intake and exhaust dampers shall open. When the room is unoccupied, the reverse shall occur.

4. A room temperature sensor on a rise in room temperature, shall start Air Handling Unit shall on low speed and respective intake and relief air dampers shall open. On a continued rise in temperature, the room temperature sensor shall change the fan speed from low to high speed. On a drop in temperature, the reverse shall occur.

5. Whenever Air Handling Unit is activated;

- Discharge duct sensor shall through stand-alone DDC controller, modulate 3 way valve on preheat coil to maintain 50EF discharge air temperature.

3.3.14 Smoke Exhaust System

SEF-1, 2, 3, 4; SSF-1, 2, 3; HV-18, HV-26; RF-18, RF-26

1. Each fan shall be started by a signal from the fire alarm system. Where each fan starts this Contractor shall open the associated outside air damper for each fan. Fan shall not start until associated damper is open.

2. Unit HV-18 and HV-26 will continue to run or shall be started if not running by the fire alarm system. This Contractor shall open the minimum and maximum outside air dampers 100%. The fans RF-18 and RF-26 will be shut down by the fire alarm system. This Contractor shall close associated return air and relief air dampers. This Contractor shall override normal control of units HV-18 and HV-26 to provide 100% flow of outdoor air. The low limit sensor shall modulate the HV-18 and HV-26 heating coil valve to maintain a minimum leaving air temperature of 50 degrees F.

3. Make-up air fans SSF-1, 2, and 3 shall be started by the fire alarm system and run continuously. This Contractor shall open associated outside air dampers for SSF-1, 2 and 3.

Points List

Point Description	DO	DI	AI	AO
SSF-1 O.A. Damper	X			
SSF-2 O.A. Damper	X			
SSF-3 O.A. Damper	X			

Additional points as called for under Control Sequences for HV-18 and HV-26.

3.3.15 Pool Heating Systems HX-5, HX-6

1. This system shall be controlled by the DDC system.

2. The pool water circulating pumps will be started and stopped by the control system controlling the pool.

3. The DDC system shall monitor the hot water return temperature of the pool water coming back to the heat exchanger. A temperature sensor in the supply water to the pool will modulate the 1/3 low flow and 2/3 high flow steam valves on HX-5, HX-6 to maintain an adjustable temperature set point established by the pool consultant.

4. The sensor monitoring the pool water supply temperature will shut the steam valves and alarm the system when the temperature exceeds an adjustable high limit set point.

Points List

Point Description	DO	DI	AI	AO
Pool Water Return Temperature			X(3)	
Pool Water Supply Temperature			X(3)	
HX 1/3 Steam Valve (HX-5, 6)				X(3)
HX 2/3 Steam Valve (HX-5, 6)				X(3)

(Note: Number in ( ) indicates quantity.

3.3.16 Cabinet Convectors

1. Cabinet convectors will be provided with an automatic control valve. A DDC space sensor, one on each exterior wall in each space, will control the convector valves on the associated exterior wall.

Points List

Point Description	DO	DI	AO	AI
Space Temperature (Each)				X(3)
Convector Valve (each)			X(3)	

3.3.17 Hot Water Cabinet Heaters and Unit Heaters

1. A DDC space sensor will monitor the space temperature. The temperature sensor will modulate the two way valve to maintain the set point. Fans will be started and run continuously.

Points List

Point Description	DO	DI	AO	AI
Fan S/S	X(each)			
Space Temp				X(each)
Control Valve			X(each)	

3.4 COMMISSIONING PROCEDURES

3.4.1 Evaluations

The Contractor shall make the observations, adjustments, calibrations, measurements, and tests of the control systems, set the time schedule, and make any necessary control system corrections to ensure that the systems function as described in the sequence of operation.

3.4.1.1 Item Check

Signal levels shall be recorded for the extreme positions of each controlled device. An item-by-item check of the sequence of operation requirements shall be performed using Steps 1 through 4 in the specified control system commissioning procedures. Steps 1, 2, and 3 shall be performed with the HVAC system shut down; Step 4 shall be performed after the HVAC systems have been started. External input signals to the DDC system (such as starter auxiliary contacts, and external systems) may be simulated in steps 1, 2, and 3. With each operational mode signal change, DDC system output relay contacts shall be observed to ensure that they function.

3.4.1.2 Weather Dependent Test Procedures

Weather dependent test procedures that cannot be performed by simulation shall be performed in the appropriate climatic season. When simulation is used, the actual results shall be verified in the appropriate season.

3.4.1.3 Two-Point Accuracy Check

A two-point accuracy check of the calibration of each HVAC control system sensing element and transmitter shall be performed by comparing the DDC system readout to the actual value of the variable measured at the sensing element and transmitter or airflow measurement station location. Digital indicating test instruments shall be used, such as digital thermometers, motor-driven psychrometers, and tachometers. The test instruments shall be at least twice as accurate as the specified sensing element-to-DDC system readout accuracy. The calibration of the test instruments shall be traceable to National Institute Of Standards And Technology standards. The first check point shall be with the HVAC system in the shutdown condition, and the second check point shall be with the HVAC system in an operational condition. Calibration checks shall verify that the sensing element-to-DDC system readout accuracies at two points are within the specified product accuracy tolerances. If not, the device shall be recalibrated or replaced

and the calibration check repeated.

3.4.1.4 Insertion and Immersion Temperatures

Insertion temperature and immersion temperature sensing elements and transmitter-to-DDC system readout calibration accuracy shall be checked at one physical location along the axis of the sensing element.

3.4.1.5 Averaging Temperature

Averaging temperature sensing element and transmitter-to-DDC system readout calibration accuracy shall be checked every 2 feet along the axis of the sensing element in the proximity of the sensing element, for a maximum of 10 readings. These readings shall then be averaged.

3.4.2 Space Temperature Controlled Perimeter Radiation

The heating medium shall be turned on, and the thermostat temperature setpoint shall be raised. The valve shall open. The thermostat temperature shall be lowered and the valve shall close. The thermostat shall be set at the setpoint shown.

3.4.3 Unit Heater and Cabinet Unit Heater

The "OFF/AUTO" switch shall be placed in the "OFF" position. Each space thermostat temperature setting shall be turned up so that it makes contact to turn on the unit heater fans. The unit heater fans shall not start. The "OFF/AUTO" switch shall be placed in the "AUTO" position. It shall be ensured that the unit heater fans start. Each space thermostat temperature setting shall be turned down, and the unit heater fans shall stop. The thermostats shall be set at their temperature setpoints. The results of testing of one of each type of unit shall be logged.

3.4.4 Fan Coil Unit

The dual-temperature hydronic system shall be set to heating. Each space thermostat temperature setting shall be turned up so that it makes contact and turns the fan coil unit on. It shall be ensured that the fan coil unit fan starts and the valves open to flow through the coils. Each space thermostat temperature setting shall be turned down and it shall be ensured that the fan coil unit fans stop. It shall be ensured that the valves close to flow through the coils. The dual-temperature hydronic system shall be switched to cooling. Each space thermostat temperature setting shall be turned up and it shall be ensured that contact is broken and the fan coil unit fans stop. It shall be ensured that the valves close to flow through the coil. Each space thermostat temperature setting shall be turned down. It shall be ensured that the fan coil unit fans start and the valves open to flow through the coils. The thermostats shall be set at their temperature setpoints. The results of testing of one of each type of unit shall be logged.

3.4.5 Hydronic Heating with Steam/Hot Water Converter

Installation shall be as follows:

a. Step 1 - System Inspection: The HVAC system shall be observed in its shutdown condition. Power and main air shall be available where required. The converter valve shall be closed.

b. Step 2 - Calibration Accuracy Check with HVAC System Shutdown: Readings shall be taken with a digital thermometer at each temperature sensing element location. Each temperature shall be read at the DDC controller, and the thermometer and DDC system readings logged. The calibration accuracy of the sensing element-to-DDC system readout for outside air temperature and hydronic system supply temperature shall be checked.

c. Step 3 - Actuator Range Adjustments: A signal shall be applied to the actuator, through an operator entered value to the DDC system. The proper operation of the actuators and positions for all valves shall be verified. The signal shall be varied from live zero to full range, and it shall be verified that the actuators travel from zero stroke to full stroke within the signal range. It shall be verified that all sequenced actuators move from zero stroke to full stroke in the proper direction and move the connected device in the proper direction from one extreme position to the other.

d. Step 4 - Control System Commissioning:

(1) The two-point calibration sensing element-to-DDC system readout accuracy check for the outside air temperature shall be performed. Any necessary software adjustments to setpoints or parameters shall be made to achieve the outside air temperature schedule.

(2) A signal shall be applied to simulate that the outside air temperature is above the setpoint. It shall be verified that pump stops. A signal shall be applied to simulate that the outside air temperature is below the setpoint. It shall be verified that pump starts.

(3) The two-point calibration accuracy check of the sensing element-to-DDC system readout for the system supply temperature shall be performed. The system supply temperature setpoint shall be set for the temperature schedule as shown. Signals of 8 ma and 16 ma shall be sent to the DDC system from the outside air temperature sensor, to verify that the supply temperature setpoint changes to the appropriate values.

(4) The control system shall be placed in the occupied mode. The calibration accuracy check of sensing element-to-DDC system readout shall be performed for each space temperature sensor and the values logged. Each space temperature setpoint shall be set as shown. The control system shall be placed in the unoccupied mode, and it shall be verified that each space temperature setpoint changes to the unoccupied mode setting.

3.4.6 Heating and Ventilating Unit

Steps for installation are as follows:

a. Step 1 - System Inspection: The HVAC system shall be observed in its shutdown condition. The system shall be checked to see that power and main air are available where required, the outside air damper and relief air damper are closed, and the return air damper is open.

b. Step 2 - Calibration Accuracy Check with HVAC System Shutdown: Readings shall be taken with a digital thermometer at each temperature sensing element location. Each temperature shall be read at the DDC controller, and the thermometer and DDC system readings logged. The calibration accuracy of the sensing element-to-DDC system readout for space temperature shall be checked.

c. Step 3 - Actuator Range Adjustments: A signal shall be applied to the actuator through an operator entered value to the DDC system. The proper operation of the actuators and positioners for all dampers and valves shall be verified. The signal shall be varied from live zero to full range, and that the actuators travel from zero stroke to full stroke within the signal range shall be verified. It shall be verified that all sequenced and parallel-operated actuators move from zero stroke to full stroke in the proper direction, and move the connected device in the proper direction from one extreme position to the other.

d. Step 4 - Control System Commissioning:

(1) With the fan ready to start, the system shall be placed in the ventilation delay mode and in the occupied mode through operator entered values. It shall be verified that supply fan and return fan start. It shall be verified that the outside air and relief air dampers are closed, the return air damper is open, and the heating coil valve is under control, by artificially changing the space temperature through operator entered values. The system shall be placed out of the ventilation delay mode, and it shall be verified that the outside air, return air, and relief air dampers come under control by simulating a change in space temperature.

(2) The control system shall be placed in the minimum outside air mode. It shall be verified that the outside air damper opens to minimum position.

(3) The calibration accuracy check of sensing element-to-DDC system readout for the space temperature shall be performed. The space temperature setpoint shall be set as shown.

(4) The control system shall be placed in the unoccupied mode, and it shall be verified that the HVAC system shuts down, and the control system assumes the specified shutdown conditions. The space temperature shall be artificially changed to below the night setback setpoint, and it shall be verified that the HVAC system starts; the space temperature shall be artificially changed to above the night setback setpoint, and it shall be verified that the HVAC system stops. The night setback temperature setpoint

shall be set as shown.

(5) With the HVAC system running, a filter differential pressure switch input signal shall be simulated, at the device. It shall be verified that the filter alarm is initiated. The differential pressure switch shall be set at the setpoint as shown.

(6) With the HVAC system running, a freezestat trip input signal shall be simulated at the device. HVAC system shutdown shall be verified. It shall be verified that a low temperature alarm is initiated. The freezestat shall be set at the setpoint. The HVAC system shall be restarted by manual restart and it shall be verified that the alarm returns to normal.

(7) With the HVAC system running, a smoke detector trip input signal shall be simulated at each detector, and verification of control device actions and interlock functions as described in the Sequence of Operation shall be made. Simulation shall be performed without false-alarming any Life Safety systems. It shall be verified that the HVAC system shuts down and that the smoke detector alarm is initiated. The detectors shall be reset. The HVAC system shall be restarted by manual reset, and it shall be verified that the alarm signal is changed to a return-to-normal signal.

3.4.7 Variable Air Volume Control System - With Return Fan

Steps for installation shall be as follows:

a. Step 1 - System Inspection: The HVAC system shall be observed in its shutdown condition. It shall be verified that power and main air are available where required, and that the outside air and relief air dampers are closed, the return air damper is open, and that the supply fan and return/relief fan inlet vanes and cooling coil valve are closed.

b. Step 2 - Calibration Accuracy Check with HVAC System Shutdown: Readings shall be taken with a digital thermometer at each temperature sensing element location. Each temperature shall be read at the DDC controller, and the thermometer and DDC system display readings logged. The calibration accuracy of the sensing element-to-DDC system readout for outside air, return air, mixed air, and cooling coil discharge temperatures shall be checked. The minimum outside air flow, supply air flow, and return air flow shall be read, using a digital indicating velometer, and the velometer and DDC system display readings logged. The flows should read zero.

c. Step 3 - Actuator Range Adjustments: A signal shall be applied to the actuators through an operator entered value at the DDC system. The proper operation of the actuators and positioners for all dampers and valves shall be visually verified. The signal shall be varied from live zero to full range, and actuator travel shall be verified from zero stroke to full stroke within the signal range. It shall be verified that all sequenced and parallel operated actuators move from zero stroke to full stroke in the proper direction, and move the connected device in the proper

direction from one extreme position to the other.

d. Step 4 - Control System Commissioning:

(1) With the fans ready to start, the control system shall be placed in the ventilation delay mode and in the occupied mode, and it shall be verified that supply fan and return fan start. It shall be verified that the outside air dampers and relief air damper are closed, the return air damper is open, and the cooling coil valve and inlet vanes are under control, by simulating a change in the fan discharge temperature. The system shall be placed out of the ventilation delay mode, and it shall be verified that the economizer outside air and relief air dampers remain closed, the return air damper remains open, and the minimum outside air damper comes under control.

(2) The two-point calibration accuracy check of sensing element-to-DDC system readout for the minimum outside air flow measurement station shall be performed. Force all VAV box dampers to the full open position, turn all exhaust fans off, manually adjust the supply duct static pressure to achieve the design duct static pressure, manually adjust the output to the return fan to establish the design differential flow difference between the supply and return duct flows, and manually adjust the minimum outside air flow to achieve a flow which is approximately 25% less than the desired air flow. Under these conditions, the minimum outside air flow control loop shall be tuned. Confirm stable operation of the minimum outside air flow control loop in response to a process disturbance.

(3) The starter switch of return fan shall be turned to the "OFF" position, and the inlet vane damper shall be opened. With supply fan running, a high static pressure input signal shall be simulated at the device by a pressure input to the sensing device. HVAC system shutdown shall be observed, and it shall be verified that the high static alarm is initiated. The HVAC system shall be restarted by manual reset, and it shall be verified that the high static alarm returns to normal.

(4) The two-point accuracy check of sensing element-to-DDC system readout for the static pressure in the supply duct shall be performed.

(5) Each VAV terminal unit controller's minimum flow and maximum flow setpoints shall be set at the same setting. This will prevent the VAV box damper from modulating under space temperature control and will achieve a constant supply duct system pressure drop. The return fan inlet vane shall be placed under control, and the starter switch shall be turned to the "AUTO" position so that the fan starts. The two-point calibration accuracy check of sensing element-to-DDC system readout for the air flow measurement stations shall be performed. The supply fan inlet vane shall be operated manually to change the supply fan flow, and the control system shall be set to control at scheduled cfm at 4-ma input and

scheduled cfm at 20-ma input. The supply fan flow shall be changed to verify that the return flow setpoint tracks the supply fan flow with the proper flow differential.

(6) The economizer mode shall be simulated by a change in the outside air temperature and the return air temperature through operator entered values and it shall be verified that the system goes into the economizer mode. The mixed air temperature shall be artificially changed through operator entered values to slightly open the economizer outside air damper and the second point of the two-point calibration accuracy check of sensing element-to-DDC system readout for outside air, return air, and mixed air temperatures shall be performed. The temperature setpoint shall be set as shown.

(7) The two-point calibration accuracy check of sensing element-to-DDC system readout for the fan discharge temperature shall be performed. The setpoint for the fan discharge temperature shall be set as shown. A change shall be simulated in the discharge air temperature through an operator entered value and it shall be verified that the control valve is modulated.

(8) The control system shall be placed in the unoccupied mode and it shall be verified that the HVAC system shuts down and the control system assumes the specified shutdown conditions. The space temperature shall be artificially changed to below the night setback temperature setpoint, and it shall be verified that the HVAC system starts; the space temperature shall be artificially changed to above the night setback temperature setpoint and it shall be verified that the HVAC system stops. The night setback temperature setpoint shall be set at the setpoint.

(9) With the HVAC system running, a filter differential pressure switch input signal shall be simulated at the device. It shall be verified that the filter alarm is initiated. The differential pressure switch shall be set at the setpoint as shown. This shall be performed for each filter.

(10) With the HVAC system running, a freezestat trip input signal shall be simulated at the device. HVAC system shutdown shall be verified. It shall be verified that a low temperature alarm is initiated. The freezestat shall be set at the setpoint as shown. The HVAC system shall be restarted by manual restart and it shall be verified that the alarm returns to normal.

(11) With the HVAC system running, a smoke detector trip input signal shall be simulated at each device. Control device actions and interlock functions as described in the Sequence of Operation shall be verified. Simulation shall be performed without false-alarming any Life Safety systems. It shall be verified that the HVAC system shuts down and the smoke detector alarm is initiated. The detectors shall be reset. The HVAC system shall be restarted by manual reset, and the alarm return-to-normal shall be verified.

(12) For each VAV terminal unit, velocity setpoints shall be set for minimum and maximum flow, and temperature setpoints for the heating/cooling dead band. The actions of the controller, the operation of the damper, and the operation of heating shall be verified. It shall be verified that space temperature is maintained.

3.5 BALANCING, COMMISSIONING, AND TESTING

3.5.1 Coordination with HVAC System Balancing

Commissioning of the control system, except for tuning of controllers, shall be performed prior to or simultaneous with HVAC system balancing. The contractor shall tune the HVAC control system after all air system and hydronic system balancing has been completed, minimum damper positions set and a report has been issued.

3.5.2 Work Associated with Emergency Mechanical Systems

This contractor shall include in the base bid price sufficient man hours to conduct tests of fire safety systems in accordance with NFPA. This trade shall coordinate with other trades and jointly test all systems. When all systems are working properly, inform Government in writing so that Government's representative(s) can witness. All tests shall be conducted again in the presence of Government's representative(s). The trades shall test the following systems and interfaces to the mechanical systems:

1. Electric (normal and standby power)
2. HVAC Fans and Dampers
3. Automatic Controls and Signals
4. Fire Suppression System
5. Fire Protective Alarm System
6. Smoke Evacuation Systems

3.5.3 Control System Calibration, Adjustments, and Commissioning

Control system commissioning shall be performed for each HVAC system, using test plans and procedures previously approved by the Government. The Contractor shall provide all personnel, equipment, instrumentation, and supplies necessary to perform commissioning and testing of the HVAC control system. All instrumentation and controls shall be calibrated and the specified accuracy shall be verified using test equipment with calibration traceable to NIST standards. Wiring shall be tested for continuity and for ground, open, and short circuits. Tubing systems shall be tested for leaks. Mechanical control devices shall be adjusted to operate as specified. HVAC control panels shall be pretested off-site as a functioning assembly ready for field connections, calibration, adjustment, and commissioning of the operational HVAC control system. Control parameters and logic (virtual) points including control loop setpoints, gain constants, and integral constraints, shall be adjusted before the system is placed on line. Communications requirements shall be as indicated. Written notification of any planned commissioning or testing of the HVAC Control systems shall be given to the Government at least 14

calendar days in advance.

3.5.4 Performance Verification Test

The Contractor shall demonstrate compliance of the HVAC control system with the contract documents. Using test plans and procedures previously approved by the Government, the Contractor shall demonstrate all physical and functional requirements of the project. The performance verification test shall show, step-by-step, the actions and results demonstrating that the control systems perform in accordance with the sequences of operation. The performance verification test shall not be started until after receipt by the Contractor of written permission by the Government, based on Government approval of the Commissioning Report and completion of balancing. The tests shall not be conducted during scheduled seasonal off periods of base heating and cooling systems.

3.5.5 Endurance Test

The endurance test shall be used to demonstrate the specified overall system reliability requirement of the completed system. The endurance test shall not be started until the Government notifies the Contractor in writing that the performance verification test is satisfactorily completed. The Government may terminate the testing at any time when the system fails to perform as specified. Upon termination of testing by the Government or by the Contractor, the Contractor shall commence an assessment period as described for Phase II. Upon successful completion of the endurance test, the Contractor shall deliver test reports and other documentation as specified to the Government prior to acceptance of the system.

a. Phase I (Testing). The test shall be conducted 24 hours per day, 7 days per week, for 15 consecutive calendar days, including holidays, and the system shall operate as specified. The Contractor shall make no repairs during this phase of testing unless authorized by the Government in writing.

b. Phase II (Assessment). After the conclusion of Phase I, the Contractor shall identify failures, determine causes of failures, repair failures, and deliver a written report to the Government. The report shall explain in detail the nature of each failure, corrective action taken, results of tests performed, and shall recommend the point at which testing should be resumed. After delivering the written report, the Contractor shall convene a test review meeting at the jobsite to present the results and recommendations to the Government. As a part of this test review meeting, the Contractor shall demonstrate that all failures have been corrected by performing appropriate portions of the performance verification test. Based on the Contractor's report and test review meeting, the Government may require that the Phase I test be totally or partially rerun. After the conclusion of any retesting which the Government may require, the Phase II assessment shall be repeated as if Phase I had just been completed.

3.5.6 Posted and Panel Instructions

Posted and Panel Instructions, showing the final installed conditions,

shall be provided for each system. The posted instructions shall consist of laminated half-size drawings and shall include the control system schematic, equipment schedule, sequence of operation, wiring diagram, communication network diagram, and valve and damper schedules. The posted instructions shall be permanently affixed, by mechanical means, to a wall near the control panel. Panel instructions shall consist of laminated letter-size sheets and shall include a Routine Maintenance Checklist and as-built configuration check sheets. Panel instructions and one copy of the Operation and Maintenance Manuals, previously described herein, shall be placed inside each control panel or permanently affixed, by mechanical means, to a wall near the panel.

3.6 TRAINING

3.6.1 Training Course Requirements

A training course shall be conducted for 6 operating staff members designated by the Contracting Officer in the maintenance and operation of the system, including specified hardware and software. The training period, for a total of 80 hours of normal working time, shall be conducted within 30 days after successful completion of the performance verification test. The training course shall be conducted at the project site. Audiovisual equipment and 8 sets of all other training materials and supplies shall be provided. A training day is defined as 8 hours of classroom instruction, including two 15 minute breaks and excluding lunchtime, Monday through Friday, during the daytime shift in effect at the training facility.

3.6.2 Training Course Content

For guidance in planning the required instruction, the Contractor shall assume that attendees will have a high school education or equivalent, and are familiar with HVAC systems. The training course shall cover all of the material contained in the Operating and Maintenance Instructions, the layout and location of each HVAC control panel, the layout of one of each type of unitary equipment and the locations of each, the location of each control device external to the panels, the location of the compressed air station, preventive maintenance, troubleshooting, diagnostics, calibration, adjustment, commissioning, tuning, and repair procedures. Typical systems and similar systems may be treated as a group, with instruction on the physical layout of one such system. The results of the performance verification test and the calibration, adjustment and commissioning report shall be presented as benchmarks of HVAC control system performance by which to measure operation and maintenance effectiveness.

SECTION 15990

TESTING, ADJUSTING, AND BALANCING OF HVAC SYSTEMS

PART 1 GENERAL

1.1 REFERENCES

The publications listed below form a part of this specification to the extent referenced. The publications are referred to in the text by basic designation only.

ASSOCIATED AIR BALANCE COUNCIL (AABC)

AABC MN-1	(1989) National Standards for Testing and Balancing Heating, Ventilating, and Air Conditioning Systems

NATIONAL ENVIRONMENTAL BALANCING BUREAU (NEBB)

NEBB-01	(1991) Procedural Standards for Testing Adjusting Balancing of Environmental Systems

1.2 SUBMITTALS

Government approval is required for submittals with a "GA" designation; submittals having a "FIO" designation are for information only. The following shall be submitted in accordance with Section 01330 SUBMITTAL PROCEDURES:

SD-01 Data

TAB Related HVAC Submittals; FIO.

A list of the TAB Related HVAC Submittals, no later than 7 days after the approval of the TAB Specialist.

SD-04 Drawings

TAB Schematic Drawings and Report Forms; GA.

Three copies of the TAB Schematic Drawings and Report Forms, no later than 21 days prior to the start of TAB field measurements.

SD-06 Instructions

TAB Procedures; GA.

Proposed procedures for TAB, submitted with the TAB Schematic Drawings and Report Forms.

SD-07 Schedules

Systems Readiness Check; FIO.

Proposed date and time to begin the Systems Readiness Check, no later than 7 days prior to the start of the Systems Readiness Check.

TAB Execution; GA.

Proposed date and time to begin field measurements, making adjustments, etc., for the TAB Report, submitted with the Systems Readiness Check Report.

TAB Verification; GA.

Proposed date and time to begin the TAB Verification, submitted with the TAB Report.

SD-08 Statements

TAB Firm; GA.

Certification of the proposed TAB Firm's qualifications by either AABC or NEBB to perform the duties specified herein and in other related Sections, no later than 21 days after the Notice to Proceed. The documentation shall include the date that the Certification was initially granted and the date that the current Certification expires. Any lapses in Certification of the proposed TAB Firm or disciplinary action taken by AABC or NEBB against the proposed TAB Firm shall be described in detail.

TAB Specialist; GA.

Certification of the proposed TAB Specialist's qualifications by either AABC or NEBB to perform the duties specified herein and in other related Sections, no later than 21 days after the Notice to Proceed. The documentation shall include the date that the Certification was initially granted and the date that the current Certification expires. Any lapses in Certification of the proposed TAB Specialist or disciplinary action taken by AABC or NEBB against the proposed TAB Specialist shall be described in detail.

Instrument Calibration; FIO.

List of each instrument to be used during TAB, stating calibration requirements required or recommended by both the TAB Standard and the instrument manufacturer and the actual calibration history of the instrument, submitted with the TAB Procedures. The calibration history shall include dates calibrated, the qualifications of the calibration laboratory, and the calibration procedures used.

SD-09 Reports

Design Review Report; GA.

A copy of the Design Review Report, no later than 14 days after approval of the TAB Firm and the TAB Specialist.

Systems Readiness Check Report; GA.

A copy of completed checklists for each system, each signed by the TAB Specialist, at least 7 days prior to the start of TAB Execution. All items in the Systems Readiness Check Report shall be signed by the TAB Specialist and shall bear the seal of the Professional Society or National Association used as the TAB Standard.

TAB Report; GA.

Three copies of the completed TAB Reports, no later that 7 days after the execution of TAB. All items in the TAB Report shall be signed by the TAB Specialist and shall bear the seal of the Professional Society or National Association used as the TAB Standard.

TAB Verification Report; GA.

Three copies of the completed TAB Verification Report, no later that 7 days after the execution of TAB Verification. All items in the TAB Verification Report shall be signed by the TAB Specialist and shall bear the seal of the Professional Society or National Association used as the TAB Standard.

SD-13 Certificates

Ductwork Leak Testing; FIO.

A written statement signed by the TAB Specialist certifying that the TAB Specialist witnessed the Ductwork Leak Testing, it was successfully completed, and that there are no known deficiencies related to the ductwork installation that will prevent TAB from producing satisfactory results.

1.3 SIMILAR TERMS

In some instances, terminology differs between the Contract and the TAB Standard primarily because the intent of this Section is to use the industry standards specified, along with additional requirements listed herein to produce optimal results. The following table of similar terms is provided for clarification only. Contract requirements take precedent over the corresponding AABC or NEBB requirements where differences exist.

SIMILAR TERMS

Contract Term	AABC Term	NEBB Term
TAB Standard	National Standards for Testing and Balancing Heating, Ventilating, and Air Conditioning Systems	Procedural Standards for Testing Adjusting Balancing of Environmental Systems.

SIMILAR TERMS

TAB Specialist	TAB Engineer	TAB Supervisor
Systems Readiness Check	Construction Phase Inspection	Field Readiness Check & Preliminary Field Procedures.

1.4 TAB STANDARD

TAB shall be performed in accordance with the requirements of the standard under which the TAB Firm's qualifications are approved, i.e., AABC MN-1or NEBB-01, unless otherwise specified herein. All recommendations and suggested practices contained in the TAB Standard shall be considered mandatory. The provisions of the TAB Standard, including checklists, report forms, etc., shall, as nearly as practical, be used to satisfy the Contract requirements. The TAB Standard shall be used for all aspects of TAB, including qualifications for the TAB Firm and Specialist and calibration of TAB instruments. Where the instrument manufacturer calibration recommendations are more stringent than those listed in the TAB Standard, the manufacturer's recommendations shall be adhered to. All quality assurance provisions of the TAB Standard such as performance guarantees shall be part of this contract. For systems or system components not covered in the TAB Standard, TAB procedures shall be developed by the TAB Specialist. Where new procedures, requirements, etc., applicable to the Contract requirements have been published or adopted by the body responsible for the TAB Standard used (AABC or NEBB), the requirements and recommendations contained in these procedures and requirements shall be considered mandatory.

1.5 QUALIFICATIONS

1.5.1 TAB Firm

The TAB Firm shall be either a member of AABC or certified by the NEBB and certified in all categories and functions where measurements or performance are specified on the plans and specifications, including TAB of environmental systems, building systems commissioning, and the measuring of sound and vibration in environmental systems. The certification shall be maintained for the entire duration of duties specified herein. If, for any reason, the firm loses subject certification during this period, the Contractor shall immediately notify the Contracting Officer and submit another TAB Firm for approval. Any firm that has been the subject of disciplinary action by either the AABC or the NEBB within the five years preceding Contract Award shall not be eligible to perform any duties related to the HVAC systems, including TAB. All work specified in this Section and in other related Sections to be performed by the TAB Firm shall be considered invalid if the TAB Firm loses its certification prior to Contract completion and must be performed by an approved successor. These TAB services are to assist the prime Contractor in performing the quality oversight for which it is responsible. The TAB Firm shall be a subcontractor of the prime Contractor, and shall report to and be paid by the prime Contractor.

1.5.2 TAB Specialist

The TAB Specialist shall be either a member of AABC or an experienced technician of the Firm certified by the NEBB. The certification shall be maintained for the entire duration of duties specified herein. If, for any reason, the Specialist loses subject certification during this period, the Contractor shall immediately notify the Contracting Officer and submit another TAB Specialist for approval. Any individual that has been the subject of disciplinary action by either the AABC or the NEBB within the five years preceding Contract Award shall not be eligible to perform any duties related to the HVAC systems, including TAB. All work specified in this Section and in other related Sections performed by the TAB Specialist shall be considered invalid if the TAB Specialist loses its certification prior to Contract completion and must be performed by the approved successor.

1.6 TAB SPECIALIST RESPONSIBILITIES

All TAB work specified herein and in related sections shall be performed under the direct guidance of the TAB Specialist. The TAB Specialist shall participate in the commissioning process specified in Section 15995 COMMISSIONING OF HVAC SYSTEMS.

PART 2 PRODUCTS (Not Applicable)

PART 3 EXECUTION

3.1 DESIGN REVIEW

The TAB Specialist shall review the Contract Plans and Specifications and advise the Contracting Officer of any deficiencies that would prevent the HVAC systems from effectively operating in accordance with the sequence of operation specified or prevent the effective and accurate TAB of the system. The TAB Specialist shall provide a Design Review Report individually listing each deficiency and the corresponding proposed corrective action necessary for proper system operation.

3.2 TAB RELATED HVAC SUBMITTALS

The TAB Specialist shall prepare a list of the submittals from the Contract Submittal Register that relate to the successful accomplishment of all HVAC TAB. The submittals identified on this list shall be accompanied by a letter of approval signed and dated by the TAB Specialist when submitted to the Government. The TAB Specialist shall also ensure that the location and details of ports, terminals, connections, etc., necessary to perform TAB are identified on the submittals.

3.3 TAB SCHEMATIC DRAWINGS AND REPORT FORMS

A schematic drawing showing each system component, including balancing devices, shall be provided for each system. Each drawing shall be accompanied by a copy of all report forms required by the TAB Standard used for that system. Where applicable, the acceptable range of operation or appropriate setting for each component shall be included on the forms or as

an attachment to the forms. The schematic drawings shall identify all testing points and cross reference these points to the report forms and procedures.

3.4 DUCTWORK LEAK TESTING

The TAB Specialist shall witness the Ductwork Leak Testing specified in Section 15895 AIR SUPPLY, DISTRIBUTION, VENTILATION, AND EXHAUST SYSTEM and approve the results as specified in Paragraph TAB RELATED HVAC SUBMITTALS.

3.5 TESTING, ADJUSTING, AND BALANCING

3.5.1 TAB Procedures

Step by step procedures for each measurement required during TAB Execution shall be provided. The procedures shall be oriented such that there is a separate section for each system. The procedures shall include measures to ensure that each system performs as specified in all operating modes, interactions with other components (such as exhaust fans, relief vents, etc.) and systems, and with all seasonal operating differences, diversity, simulated loads, and pressure relationships required.

3.5.2 Systems Readiness Check

The TAB Specialist shall inspect each system to ensure that it is complete, including installation and operation of controls, and that all aspects of the facility that have any bearing on the HVAC systems, including installation of ceilings, walls, windows, doors, and partitions, are complete to the extent that TAB results will not be affected by any detail or touch-up work remaining. The TAB Specialist shall also verify that all items such as ductwork and piping ports, terminals, connections, etc., necessary to perform TAB shall be complete during the Systems Readiness Check.

3.5.3 Preparation of TAB Report

Preparation of the TAB Report shall begin only when the Systems Readiness Report has been approved. The Report shall be oriented so that there is a separate section for each system. The Report shall include a copy of the appropriate approved Schematic Drawings and TAB Related Submittals, such as pump curves, fan curves, etc., along with the completed report forms for each system. The operating points measured during successful TAB Execution and the theoretical operating points listed in the approved submittals shall be marked on the performance curves and tables. Where possible, adjustments shall be made using an "industry standard" technique which would result in the greatest energy savings, such as adjusting the speed of a fan instead of throttling the flow. Any deficiencies outside of the realm of normal adjustments and balancing during TAB Execution shall be noted along with a description of corrective action performed to bring the measurement into the specified range. If, for any reason, the TAB Specialist determines during TAB Execution that any Contract requirement cannot be met, the TAB Specialist shall immediately provide a written description of the deficiency and the corresponding proposed corrective action necessary for proper system operation to the Contracting Officer.

3.5.4 TAB Verification

The TAB Specialist shall recheck ten percent of the measurements listed in the Tab Report and prepare a TAB Verification Report. The measurements selected for verification and the individuals that witness the verification will be selected by the Contracting Officer's Representative (COR). The measurements will be recorded in the same manner as required for the TAB Report. All measurements that fall outside the acceptable operating range specified shall be accompanied by an explanation as to why the measurement does not correlate with that listed in the TAB Report and a description of corrective action performed to bring the measurement into the specified range. If over 20 percent of the measurements selected by the COR for verification fall outside of the acceptable operating range specified, the COR will select an additional ten percent for verification. If over 20 percent of the total tested (including both test groups) fall outside of the acceptable range, the TAB Report shall be considered invalid and all contract TAB work shall be repeated beginning with the Systems Readiness Check.

3.5.5 Marking of Setting

Following approval of TAB Verification Report, the setting of all HVAC adjustment devices including valves, splitters, and dampers shall be permanently marked by the TAB Specialist so that adjustment can be restored if disturbed at any time.

3.5.6 Identification of Test Ports

The TAB Specialist shall permanently and legibly identify the location points of duct test ports. If the ductwork has exterior insulation, the identification shall be made on the exterior side of the insulation. All penetrations through ductwork and ductwork insulation shall be sealed to prevent air leakage or to maintain integrity of vapor barrier.

3.5.7 Scope of Work:

Record the data listed under each item below:

3.5.7.1 Air Moving Equipment (For all Air Handling Units and Fans):

a. Designation
b. Location
c. Manufacturer
d. Model
e. Airflow, specified and actual
f. Return airflow, specified and actual
g. Outside airflow, specified and actual
h. Total static pressure (total external), specified and actual
i. Inlet pressure
j. Discharge pressure
k. Fan RPM

3.5.7.2 Return/Exhaust Fan Data:

a. Designation
b. Location
c. Manufacturer
d. Model
e. Airflow, specified and actual
f. Total static pressure (total external), specified and actual
g. Inlet pressure
h. Discharge pressure
i. Fan RPM, initial and final

3.5.7.3 Electric Motor:

a. Manufacturer
b. HP
c. Frame
d. Phase, voltage, amperage; nameplate and actual
e. RPM
f. Service factor
g. Starter size, rating, heater elements

3.5.7.4 V-Belt Drive:

a. Identification
b. Driven sheave, diameter
c. Belt, size and quantity
d. Motor sheave, diameter
e. Center to center distance, maximum, mimimum, and actual
f. Final components

3.5.7.5 Duct Traverse:

a. System zone/branch
b. Duct size
c. Area
d. Design velocity
e. Design airflow
f. Test velocity
g. Test airflow
h. Duct static pressure
i. Air temperature
j. Air correction factor

3.5.7.6 Air Monitoring Station Data:

a. Identification/location
b. System
c. Size
d. Area
e. Design velocity
f. Design airflow
g. Test velocity

h. Test airflow

3.5.7.7 Air Distribution Test Sheet:

a. Air terminal number
b. Room number/location
c. Terminal type
d. Terminal Size
e. Area factor
f. Design velocity
g. Design airflow
h. Test velocity, initial and final
i. Test airflow, final
j. Percent of design airflow, initial and final

3.5.7.8 Terminal Unit Data:

a. Designation
b. Location
c. Manufacturer
d. Type, constant, variable, single dual duct
e. Model
f. Size
g. Minimum static pressure
h. Minimum design airflow
i. Minimum actual airflow
j. Maximum design airflow
k. Maximum actual airflow
l. Inlet static pressure

3.5.7.9 Pump Data:

a. Designation
b. Location
c. Manufacturer
d. Size/model
e. Impeller diameter
f. Service
g. Design flow rate, pressure drop
h. Actual flow rate, pressure drop
i. Discharge pressure
j. Suction pressure
k. Total operating head pressure
l. Shut-off, discharge and suction pressures
m. Shut-off, total head pressure

3.5.7.10 Cooling Tower:

a. Designation
b. Location
c. Manufacturer
d. Model
e. Rated capacity
f. Entering air WB temperature, specified and actual

g. Leaving air WB temperature, specified and actual
h. Ambient air DB temperature
i. Condenser water entering temperature
j. Condenser water leaving temperature
k. Condenser water flow rate
l. Fan RPM
m. CFM, specified and calculated

3.5.7.11 Chiller:

a. Designation
b. Location
c. Manufacturer
d. Capacity
e. Model
f. Evaporator entering water temperature, design and actual
g. Evaporator leaving water temperature, design and actual.
h. Evaporator pressure drop, design and actual
i. Evaporator water flow rate, design and actual
j. Condenser entering water temperature, design and actual
k. Condenser leaving water temperature, design and actual
l. Condenser pressure drop, design and actual
m. Condenser water flow rate, design and actual

3.5.7.12 Air Cooled Condeser:

a. Designation
b. Location
c. Manufacturer
d. Model
e. Entering DB air temperature, design and actual
f. Leaving DB air temperature, design and actual
g. Number of compressors

3.5.7.13 Heat Exchanger:

a. Designation
b. Location
c. Service
d. Manufacturer
e. Model and type
f. Steam pressure, design an actual
g. Primary water entering temperature, design and actual
h. Primary water leaving temperature, design and actual
i. Primary water flow, design and actual
j. Primary water pressure drop, design and actual
k. Steam entering pressure

3.5.7.14 Cooling Coil Data:

a. Designation
b. Location
c. Service
d. Manufacturer

e. Size, face area, and fins/inch
f. Airflow, design and actual
g. Entering air DB temperature, design and actual
h. Entering air WB temperature, design and actual
i. Leaving air DB temperature, design and actual
j. Leaving air WB temperature, design and actual
k. Water flow, design and actual
l. Water pressure drop, design and actual
m. Entering water temperature, design and actual
n. Leaving water temperature, design and actual
o. Air pressure drop, design and actual.

3.5.7.15 Heating Coil Data:

a. Designation
b. Location
c. Service
d. Manufacturer
e. Size, face area, and fins/inch
f. Airflow, design and actual
g. Water flow, design and actual
h. Water pressure drop, design and actual
i. Entering steam pressure
j. Entering air temperature, design and actual
k. Leaving air temperature, design and actual
l. Air pressure drop, design and actual

3.5.7.16 Hydronic Flow Measuring Station:

a. Designation
b. Location
c. Manufacturer
d. Size
e. Model
f. Design flow rate
g. Design pressure drop
h. Actual/final pressure drop
i. Actual/final flow rate
j. Station calibrated setting

3.5.7.17 Sound Level Report:

a. Location
b. Octave Bands - equipment off
c. Octave Bands - equipment on

3.5.7.18 Vibration Tests:

a. Location of points:

(1) Fan bearing, drive end
(2) Fan bearing, opposite end
(3) Motor bearing, center (if applicable)
(4) Motor bearing, drive end

(5) Motor bearing, opposite end
(6) Casing (bottom or top)
(7) Casing (side)
(8) Duct after flexible connection (discharge)
(9) Duct after flexible connection (suction)

b. Testing readings:

(1) Horizontal, velocity and displacement
(2) Vertical, velocity and displacement
(3) Axial, velocity and displacement

c. Normally acceptable reading velocity and acceleration

d. Unusual conditions at time of test
e. Vibration source (if non-complying)

3.5.7.19 Duct Leak Test:

a. Description of ductwork under test
b. Duct design operating pressure
c. Duct design test static pressure
d. Duct capacity, airflow
e. Maximum allowable leakage equals duct capacity times leak factor.
f. Test apparatus:

(1) Blower size
(2) Orifice, tube size
(3) Orifice size
(4) Date of calibration

g. Test static pressure
h. Test orifice differential pressure
i. Measured leakage

3.5.7.20 Reports

Reports shall include a listing of any abnormal or notable conditions not contained in the above.

Provide four copies of reports in soft cover, letter size, 3-ring binder manuals, complete with index page and indexing tabs, with cover identification at front and side. Include set of reduced drawings with air outlets and equipment identified to correspond with data sheets, and indicating thermostat locations.

3.5.8 HVAC CONTRACTOR RESPONSIBILITIES

Prepare each system for testing and balancing

Cooperate with testing organization, provide access to equipment and systems. Operate systems at designated times, and under conditions required for proper testing, adjusting, and balancing.

Notify testing organization seven days prior to time system will be ready for testing, adjusting, and balancing.

Where fans (air handling units, supply fans, return fans, exhaust fans, etc.) are provided with variable pitch sheaves, HVAC Contractor shall adjust sheaves, as required, at no additional cost to the Owner, until desired Design Points (CFM and/or Static Pressure) are reached. If adjustment of the variable pitch sheaves is beyond the range of the sheaves, HVAC Contractor shall replace sheaves, as required, at no additional cost to the Owner, until the desired Design Points (CFM and/or Static Pressure) are reached. Where fans (air handling, supply, return, exhaust, etc.) are specified with fixed ratio sheaves, HVAC Contractor shall replace sheaves with new sheaves, at no additional cost to the Owner until desired Design Points (CFM and/or Static Pressure) are reached. Where fans (air handling units, supply fans, return fans, exhaust fans, etc.) are of the vane axial type with adjustable vanes, HVAC Contractor shall, at no addtional cost to Owner, adjust vanes as required until desired Design Points (CFM and/or Static Pressure) are reached.

3.5.9 SEQUENCING AND SCHEDULING

Sequencing work to commence after completion of systems and schedule completion of work before Substantial Completion of Project.

3.5.10 DRAWING AND CONSTRUCTION REVIEW

Perform a preconstruction review of the following documents:

a. Contract drawings

b. Contract specifications

c. Addenda

d. Submittal data

e. Shop drawings

f. Automatic Control drawings

Prepare a report of the preconstruction review list of recommended changes to allow most effective balancing.

Perform two construction reviews of the mechanical installation during the progress of the project. Purpose of the reviews to be:

a. Identify potential problems for performing balancing.

b. Identify modifications which will aid balancing.

c. Schedule and coordinate balancing with other work.

Prepare a report of each construction review.

3.5.11 EXAMINATION

Before commencing work, verify that systems are complete and operable. Ensure the following:

1. Equipment is operable and in safe and normal condition.

2. Temperature control systems are installed complete and operable.

3. Proper thermal overload protection is in place for electrial equipment.

4. Final filters are clean and in place. If required, install temporary media in addition to final filters.

5. Duct systems are clean of debris.

6. Correct fan rotation.

7. Fire and volume dampers are in place and open.

8. Coil fins have been cleaned and combed.

9. Access doors are closed and duct end caps are in place.

10. Air outlets are installed and connected.

11. Duct system leakage has been minimized.

12. Proper strainer baskets are clean and in place.

13. Correct pump rotation.

14. Hydronic systems have been flushed, filled, and vented.

15. Service and balance valves are open.

Report to Architect/Engineer any defects or deficiencies noted during performance of services.

Promptly report abnormal conditions in mechanical systems or conditions which prevent system balance.

If, for design reasons, system cannot be properly balanced, report as observed.

Beginning of work means acceptance of existing conditions.

3.5.12 PREPARATION

Provide instruments required for testing, adjusting and balancing operations. Make instruments available to Contracting Officer to facilitate spot checks during testing.

3.5.13 INSTALLATION TOLERANCES

Adjust Air Handling Systems to the following tolerances: Supply systems shall be balanced so that:

1. The total quantity to each space is within - 5% to + 10% of design values.

2. If two outlets in space, each outlet is within - 10% to +10% of design value.

3. If three or more outlets in space, each outlet is within -15% to +15% of design value.

4. Exhaust and return systems shall be balanced so the total total quantity from each space is -10% to +10% of design values.

Adjust Hydronic Systems to the following tolerances:

1. Heating System:

a. Supply water temperature 80EF to 120EF: 0% to +10% of design value.
b. Supply water temperature 120EF to 160EF: -5% to +10% of design value.
c. Supply water temperature above 160EF: -10% to +10% of design value.

2. Cooling System:

a. Supply water temperature above 55EF: 0% to +10% of design value.
b. Supply water temperature 45EF to 55EF: -5% to +10% of design value.
c. Supply water temperature below 45EF: -10% to +10% of design valu .

3.5.14 ADJUSTING

Recorded data shall represent actually measured or observed condition.

Permanently marked settings of valves, dampers, and other adjustment devices, allowing settings to be restored. Set and lock memory stops.

After adjustment, take measurements to verify balance has not been disrupted or that such disruption has been rectified.

Leave systems in proper working order, replacing belt guards, closing access doors, closing doors to electrical switch boxes, and restoring thermostats to specified settings.

3.5.15 AIR SYSTEM PROCEDURE

Measure and balance air quantities at air inlets an outlets.

Adjust Air Handling and Distribution Systems to provide design supply, return and exhaust air quantities at site altitude.

Make air quantity measurements in ducts by pitot tube traverse of entire

cross sectional area duct.

Adjust distribution system to obtain uniform space temperatures free from objectionable drafts and noise.

Effect volume control at outlets by use of dampers installed in the ductwork. Do not use volume dampers that are integral with the outlets.

Measure static air pressure conditions on air supply units, including filter and coil pressure drops, and total pressure across the fan. Make allowances for 50 percent loading of filters.

Adjust outside air automatic dampers, outside air, return air, and exhaust dampers for design conditions.

Measure temperature conditions across outside air, return air, and exhaust air dampers to check leakage.

Where modulating dampers are provided, take measurements and balance at extreme conditions. Set variable volume terminals at maximum airflow rate, full cooling with design diversity; read volumes at minimum airflow rate and full heating.

Measure building static pressure and adjustable supply, return and exhaust air systems to provide required relationship between each to maintain approximately 0.05 inches positive static pressure near the building entries.

Check multi-zone units for motorized damper leakage. Adjust air quantities with mixing dampers set first for cooling, then heating, the modulating.

For variable air volume system powered units, set volume controller to airflow setting indicated. Confirm connections to properly made and confirm proper operation for automatic variable air volume temperature control.

On fan-powered VAV boxes, adjust airflow switches for proper operation.

3.5.16 WATER SYSTEM PROCEDURE

Adjust water systems to provide design quantities.

Use calibrated flow meters and pressure gages to determine flow rates for system balance. Where flow metering devices are not installed, base flow balance on temperature difference across various heat transfer elements in the system.

Adjust systems to provide specified pressure drops and flows through heat transfer elements prior to thermal testing. Perform balancing by measurement of temperature differential in conjunction with air balancing.

Effect system balance with automatic control valves fully open to heat transfer elements.

Effect adjustment of water distribution systems by means of balancing cocks, valves, and fittings. Do not use service or shut-off valves for balancing unless indexed for balance point.

3.5.17 FIELD VERIFICATION

The Contracting Officer may request verification of the data contained in the Balancing Report. If so, the TAB Technician who originally initialed the data sheets shall read outlets selected at random by the Engineer who will compare the values with those in the report.

It is understood that the verification process shall take place within one week after delivery of the report. The operating mode of the system shall be the same for verification as it was during the balancing procedure.

The number of readings to be verified shall not exceed 10% of the total contained in the report.

If the field verification is not satisfactory, the firm doing the TAB work shall completely rebalance the system and a new report shall be prepared. The Design Engineer may notify the Sheet Metal Industry Certification Board for TAB Technicians so that appropriate action can be taken.

3.6 COORDINATION WITH COMMISSIONING PROCEDURE

This Contractor shall provide all work required to provide field verification and commissioning as specified in Section 15995 COMMISSIONING OF HVAC SYSTEMS.

3.7 Work Associated with Emergency Mechanical Systems

This contractor shall include in the base bid price sufficient man hours to conduct tests of fire safety systems in accordance with NFPA. This trade shall coordinate with other trades and jointly test all systems. When all systems are working properly, inform Government in writing so that Government's representative(s) can witness. All tests shall be conducted again in the presence of Government's representative(s). The trades shall test the following systems and interfaces to the mechanical systems:

1. Electric (normal and standby power)
2. HVAC Fans and Dampers
3. Automatic Controls and Signals
4. Fire Suppression System
5. Fire Protective Alarm System
6. Smoke Evacuation Systems

-- End of Section --

SECTION 15995

COMMISSIONING OF HVAC SYSTEMS

PART 1 GENERAL

1.1 SUBMITTALS

Government approval is required for submittals with a "GA" designation; submittals with "FIO" designation are for information only. The following shall be submitted in accordance with Section 01330 SUBMITTAL PROCEDURES:

SD-01 Data

Commissioning Team; FIO.

List of team members who will represent the Contractor in the pre-commissioning checks and functional performance testing, at least 2 weeks prior to the start of pre-commissioning checks. Proposed revision to the list, prior to the start of the impacted work.

SD-06 Instructions

Test Procedures; GA.

Detailed procedures for pre-commissioning checks and functional performance tests, at least 4 weeks prior to the start of pre-commissioning checks.

SD-07 Schedules

Test Schedule; GA.

Schedule for pre-commissioning checks and functional performance tests, at least 2 weeks prior to the start of pre-commissioning checks.

SD-09 Reports

Test Reports; GA.

Completed pre-commissioning checklists and functional performance test checklists organized by system and by subsystem and submitted as one package. The results of failed tests shall be included along with a description of the corrective action taken.

1.2 SEQUENCING AND SCHEDULING

The work described in this Section shall begin only after all work required in related Sections, including Section 15951 DIRECT DIGUITAL CONTROL FOR HVAC and Section 15990 TESTING, ADJUSTING AND BALANCING OF HVAC SYSTEMS,

has been successfully completed, and all test and inspection reports and operation and maintenance manuals required in these Sections have been submitted and approved.

PART 2 PRODUCTS (Not Applicable)

PART 3 EXECUTION

3.1 COMMISSIONING TEAM AND CHECKLISTS

The Contractor shall designate team members to participate in the pre-commissioning checks and the functional performance testing specified herein. In addition, the Government will be represented by a representative of the Contracting Officer, the Design Agent's Representative, and the Using Agency. The team members shall be as follows:

Designatio	Function
Q	Contractor's Chief Quality Control Representative
M	Contractor's Mechanical Representative
E	Contractor's Electrical Representative
T	Contractor's Testing, Adjusting, and Balancing Representative
C	Contractor's Controls Representative
D	Design Agent's Representative
O	Contracting Officer's Representative
U	Using Agency's Representative

Each checklist shown in appendices A and B shall be completed by the commissioning team. Acceptance by each commissioning team member of each pre-commissioning checklist item shall be indicated by initials and date unless an "X" is shown indicating that participation by that individual is not required. Acceptance by each commissioning team member of each functional performance test checklist shall be indicated by signature and date.

3.2 TESTS

The pre-commissioning checks and functional performance tests shall be performed in a manner which essentially duplicates the checking, testing, and inspection methods established in the related Sections. Where checking, testing, and inspection methods are not specified in other Sections, methods shall be established which will provide the information required. Testing and verification required by this section shall be performed during the Commissioning phase. Requirements in related Sections are independent from the requirements of this Section and shall not be used to satisfy any of the requirements specified in this Section. The Contractor shall provide all materials, services, and labor required to perform the pre-commissioning checks and functional performance tests. A pre-commissioning check or functional performance test shall be aborted if any system deficiency prevents the successful completion of the test or if any participating non-Government commissioning team member of which participation is specified is not present for the test. The Contractor shall reimburse the Government for all costs associated with effort lost due to tests that are aborted. These costs shall include salary, travel

costs and per diem (where applicable) for Government commissioning team members.

3.2.1 Pre-Commissioning Checks

Pre-commissioning checks shall be performed for the items indicated on the checklists in Appendix A. Deficiencies discovered during these checks shall be corrected and retested in accordance with the applicable contract requirements.

3.2.2 Functional Performance Tests

Functional performance tests shall be performed for the items indicated on the checklists in Appendix B. Functional performance tests shall begin only after all pre-commissioning checks have been successfully completed. Tests shall prove all modes of the sequences of operation, and shall verify all other relevant contract requirements. Tests shall begin with equipment or components and shall progress through subsystems to complete systems. Upon failure of any functional performance test checklist item, the Contractor shall correct all deficiencies in accordance with the applicable contract requirements. The checklist shall then be repeated until it has been completed with no errors.

APPENDIX A

PRE-COMMISSIONING CHECKLISTS

Pre-commissioning checklist - Piping

For High Pressure Steam, Low Pressure Steam, Condensate Return, Pumped Discharge, Hot Water, Chilled Water, Condensate Water, Heat Recovery Piping System, Pool Piping Systems, Domestic Cold Water Piping Systems, Domestic Hot Water Piping Systems, Sanitary Drain Systems, and Storm Drain Systems.

Checklist Item	Q	M	E	T	C	D	O	U
Installation								
a. Piping complete.	___	___	X	___	X	___	___	___
b. As-built shop drawings submitted.	___	___	X	___	X	___	___	___
c. Piping flushed and cleaned.	___	___	X	___	X	___	___	___
d. Strainers cleaned.	___	___	X	___	X	___	___	___
e. Valves installed as required.	___	___	X	___	X	___	___	___
f. Piping insulated as required.	___	___	X	___	X	___	___	___
g. Thermometers and gauges installed as required.	___	___	X	___	X	___	___	___
h. Verify operation of valves.	___	___	X	___	___	___	___	___
i. Air vents installed as specified.	___	___	X	X	X	___	___	___
j. Flexible connectors installed as specified	__	___	X	X	X	___	___	___
k. Verify that piping has been labeled and valves identified as specified.	___	___	X	___	___	___	___	___
Testing, Adjusting, and Balancing (TAB)								
a. Hydrostatic test complete.	___	___	X	___	X	___	___	___

Pre-commissioning checklist - Piping

For High Pressure Steam, Low Pressure Steam, Condensate Return, Pumped Discharge, Hot Water, Chilled Water, Condensate Water, Heat Recovery Piping System, Pool Piping Systems, Domestic Cold Water Piping Systems, Domestic Hot Water Piping Systems, Sanitary Drain Systems, and Storm Drain Systems.

Checklist Item	Q	M	E	T	C	D	O	U
b. TAB operation complete.	___	___	X	___	___	___	___	___

Pre-commissioning Checklist - Ductwork

For Air Handler: HV-15, 16, 17, 18, 19, 20, 21, 22, 23, 24, 26, 27, 28; and AHU 32, 33, 34, 35.

Checklist Item	Q	M	E	T	C	D	O	U
Installation								
a. Ductwork complete.	___	___	X	___	X	___	___	___
b. As-built shop drawings submitted.	___	___	X	___	X	___	___	___
c. Ductwork leak test complete.	___	___	X	___	X	___	___	___
d. Fire dampers, smoke dampers, and access doors installed as required.	___	___	X	___	X	___	___	___]
e. Ductwork insulated as required.	___	___	X	___	X	___	___	___
f. Thermometers and gauges installed as required.	___	___	___	___	___	___	___	___
g. Verify open/closed status of dampers.	___	___	X	___	X	___	___	___
h. Verify smoke dampers operation.	___	___	X	___	___	___	___	___
i. Flexible connectors installed as specified	__	___	X	___	X	___	___	___
Testing, Adjusting, and Balancing (TAB)								
a. TAB operation complete.	___	___	X	___	X	___	___	___

Pre-commissioning Checklist - Variable Volume Air Handling Unit

For Air Handling Unit: AHU 32, 33, 35

Checklist Item	Q	M	E	T	C	D	O	U
Installation								
a. Vibration isolation devices installed.	___	___	X	X	X	___	___	___
b. Inspection and access doors are operable and sealed.	___	___	X	___	X	___	___	___
c. Casing undamaged.	___	___	X	X	X	___	___	___
d. Insulation undamaged.	___	___	X	X	X	___	___	___
e. Condensate drainage is unobstructed. (Visually verify drainage by pouring a cup of water into drain pan.)	___	___	X	X	X	___	___	___
f. Fan belt adjusted.	___	___	X	___	X	___	___	___
g. Manufacturer's required maintenance clearance provided.	___	___	X	X	X	___	___	___
Electrical								
a. Power available to unit disconnect.	___	___	___	X	X	___	___	___
b. Power available to unit control panel.	___	___	___	X	___	___	___	___
c. Proper motor rotation verified.	___	___	___	___	X	___	___	___
d. Verify that power disconnect is located within sight of the unit it controls.	___	___	___	X	___	___	___	___
Coils								
a. Chilled water piping properly connected.	___	___	X	X	X	___	___	___
b. Chilled water piping pressure tested.	___	___	X	X	X	___	___	___
c. Steam and condensate piping properly connected.	___	___	X	X	X	___	___	___
d. Steam and condensate piping pressure tested.	___	___	X	X	X	___	___	___
e. Air vents installed on water coils [with shutoff valves as specified.	___	___	X	X	X	___	___	___
f. Any damage to coil fins has been repaired.	__	___	X	___	X	___	___	___

Pre-commissioning Checklist - Variable Volume Air Handling Unit

For Air Handling Unit: AHU 32, 33, 35

Checklist Item	Q	M	E	T	C	D	O	U
Controls								
a. Control valves/actuators properly installed.	___	___	X	___	___	___	___	___
b. Control valves/actuators operable.	___	___	X	___	___	___	___	___
c. Dampers/actuators properly installed.	___	___	X	___	___	___	___	___
d. Dampers/actuators operable.	___	___	X	___	___	___	___	___
e. Verify proper location, installation and calibration of duct static pressure sensor.	___	___	X	___	___	___	___	___
f. Fan air volume controller operable.	___	___	X	___	___	___	___	___
g. Air handler controls system operational.	___	___	X	___	___	___	___	___
Testing, Adjusting, and Balancing (TAB)								
a. Construction filters removed and replaced.	__	___	X	___	___	___	___	___
b. TAB report submitted.	___	___	X	___	X	___	___	___
c. TAB results within +10%/-0% of cfm shown on drawings								
d. TAB results for outside air intake within +10%/-0% of both the minimum and maximum cfms shown on drawings.	___	___	X	___	X	___	___	___

Pre-commissioning Checklist - VAV Terminal (Each Terminal Unit)

For VAV Terminal: VAV A, B, C, D, E, F.

Checklist Item	Q	M	E	T	C	D	O	U
Installation								
a. VAV terminal in place.	___	___	X	X	X	___	___	___
b. VAV terminal ducted.	___	___	X	X	X	___	___	___
c. VAV terminal connected to controls.	___	___	X	X	___	___	___	___
d. Reheat coil connected to hot water pipe.	___	___	X	___	X	___	___	___
f. Manufacturer's required maintenance clearance provided.	___	___	X	X	X	___	___	___
Controls								
a. Cooling only VAV terminal controls set.	___	___	X	X	___	___	___	___
b. Cooling only VAV controls verified.	___	___	X	X	___	___	___	___
c. Reheat VAV terminal controls set.	___	___	X	X	___	___	___	___
d. Reheat terminal/coil controls verified.	___	___	X	X	___	___	___	___
Testing, Adjusting, and Balancing (TAB)								
a. Verify terminal maximum air flow set.	___	___	X	___	___	___	___	___
b. Verify terminal minimum air flow set.	___	___	X	___	___	___	___	___
c. TAB operation complete.	___	___	X	___	X	___	___	___

Pre-commissioning Checklist - DX Air Cooled Condensing Unit

For Condensing Unit: CU 1, 2, 3 4.

Checklist Item	Q	M	E	T	C	D	O	U
Installation	___	___	X	X	X	___	___	___
b. Refrigerant pipe leak tested.	___	___	X	X	X	___	___	___
c. Refrigerant pipe evacuated and charged in accordance with manufacturer's instructions.	___	___	X	X	X	___	___	___
d. Check condenser fans for proper rotation.	___	___	X	___	X	___	___	___
e. Any damage to coil fins has been repaired.	__	___	X	___	X	___	___	___
f. Manufacturer's required maintenance/ operational clearance provided.	___	___	X	X	X	___	___	___
Electrical								
a. Power available to unit disconnect.	___	___	___	X	X	___	___	___
b. Power available to unit control panel.	___	___	___	X	___	___	___	___
c. Verify that power disconnect is located within sight of the unit it controls	___	___	___	X	___	___	___	___
Controls								
a. Unit safety/protection devices tested.	___	___	X	X	___	___	___	___
b. Control system and interlocks installed.	___	___	X	X	___	___	___	___
c. Control system and interlocks operational.	__	___	X	X	___	___	___	___

Pre-commissioning Checklist - Pumps

For Pump: P-1, 2, 3, 4, 5, 6, 7, 8, 9, 10, 11, 12, 13, 14, 15, 16, 17, 18; CP-1, 2, 3, 4; Pool Pumps; Sewage Ejector Pumps; Foundation Drainage Pumps; Domestic Water Pumps; Fuel Oil Pumps; and Fire Pumps.

Checklist Item	Q	M	E	T	C	D	O	U
Installation								
a. Pumps grouted in place.	___	___	X	X	X	___	___	___
b. Pump vibration isolation devices functional.	___	___	X	X	X	___	___	___
c. Pump/motor coupling alignment verified.	___	___	X	X	X	___	___	___
d. Piping system installed.	___	___	X	X	X	___	___	___
e. Piping system pressure tested.	___	___	X	X	X	___	___	___
f. Pump not leaking.	___	___	X	X	X	___	___	___
g. Field assembled couplings aligned to meet manufacturer's prescribed tolerances.	___	___	X	X	X	___	___	___
Electrical								
a. Power available to pump disconnect.	___	___	___	X	X	___	___	___
b. Pump rotation verified.	___	___	___	X	X	___	___	___
c. Control system interlocks functional.	___	___	___	X	___	___	___	___
d. Verify that power disconnect is located within sight of the unit it controls.	___	___	___	X	___	___	___	___
Testing, Adjusting, and Balancing (TAB)								
a. Pressure/temperature gauges installed.	___	___	X	___	X	___	___	___
b. Piping system cleaned.	___	___	X	X	X	___	___	___
c. Chemical water treatment complete.	___	___	X	X	X	___	___	___
d. Water balance complete.	___	___	X	___	X	___	___	___
e. Water balance with design maximum flow.	___	___	X	___	X	___	___	___
f. TAB Report submitted.	___	___	X	___	X	___	___	___

Pre-commissioning Checklist - Centrifugal Chiller

For Chiller: RM-1, 2.

Checklist Item	Q	M	E	T	C	D	O	U
Installation								
a. Chilled water connections properly piped.	___	___	X	___	___	___	___	___
b. Condenser water connections properly piped	___	___	X	___	___	___	___	___
c. Chilled water pipe leak tested.	___	___	X	X	X	___	___	___
d. Condenser water pipe leak tested.	___	___	X	X	X	___	___	___
e. High efficiency purge unit installed and operating as specified.	___	___	X	X	X	___	___	___
f. Refrigerant leak detector installed.	___	___	___	___	___	___	___	___
g. Oxygen sensor installed and tested.	___	___	___	___	___	___	___	___
h. Mechanical room ventilation installed as specified.	___	___	___	___	___	___	___	___
i. Manufacturer's required maintenance clearance provided.	___	___	X	X	___	___	___	___
j. Field assembled couplings aligned to meet manufacturer's prescribed tolerances.	__	___	X	X	X	___	___	___
Electrical								
a. Power available to unit starter.	___	___	___	X	___	___	___	___
b. Power available to unit control panel.	___	___	___	X	___	___	___	___
c. Verify that power disconnect is located within sight of the unit it controls.	___	___	___	X	___	___	___	___
Controls								
a. Factory startup and checkout complete.	___	___	X	X	___	___	___	___
b. Chiller safety/protection devices tested.	___	___	___	X	___	___	___	___
c. Chilled water flow switch installed.	___	___	X	X	___	___	___	___
d. Chilled water flow switch tested.	___	___	X	X	___	___	___	___
e. Chilled water pump interlock installed.	___	___	___	X	___	___	___	___

Pre-commissioning Checklist - Centrifugal Chiller

For Chiller: RM-1, 2.

Checklist Item	Q	M	E	T	C	D	O	U
f. Chilled water pump interlock tested.	___	___	___	X	___	___	___	___
g. Condenser water flow switch installed.	___	___	X	___	___	___	___	___
h. Condenser water flow switch tested.	___	___	___	X	___	___	___	___
i. Condenser water pump interlock installed.	___	___	___	X	___	___	___	___
j. Condenser water pump interlock tested.	___	___	___	X	___	___	___	___

Pre-commissioning Checklist - Cooling Tower

For Cooling Tower: CT-1, 2.

Checklist Item	Q	M	E	T	C	D	O	U
Installation								
a. Cooling tower in place.	___	___	X	___	___	___	___	___
b. Cooling tower piped.	___	___	X	X	___	___	___	___
c. Cooling tower fan drive adjusted.	___	___	___	___	X	___	___	___
d. Cooling tower makeup water supply piped.	___	___	X	X	___	___	___	___
e. Verify makeup control valve shutoff.	___	___	X	___	X	___	___	___
f. Fan lubricated and blade pitch adjusted.	___	___	X	___	X	___	___	___
g. Manufacturer's required maintenance/ operational clearance provided.	___	___	X	X	X	___	___	___
Electrical								
a. Power available to tower disconnect.	___	___	___	X	___	___	___	___
b. Power available to electric sump heater.	___	___	___	X	___	___	___	___
c. Control system interlocks functional.	___	___	___	X	___	___	___	___
d. Motor and fan rotation checked.	___	___	___	X	___	___	___	___
e. Verify that power disconnect is located within sight of the unit is controls.	___	___	___	X	___	___	___	___
Piping								
a. Tower basin is clean and filled.	___	___	X	X	X	___	___	___
b. Condenser water treatment functional.	___	___	X	X	X	___	___	___
c. Water balance with design flow verified.	___	___	X	___	X	___	___	___
d. Water distribution headers balanced.	___	___	X	___	X	___	___	___

Pre-commissioning Checklist - Steam/Hot Water Converter

For Converter: HX-1, 2, 3, 4, 5, 6.

Checklist Item	Q	M	E	T	C	D	O	U
Installation								
a. Converter steam piping installed.	___	___	X	___	X	___	___	___
b. Converter steam piping tested.	___	___	X	X	X	___	___	___
c. Hot water piping installed.	___	___	X	___	___	___	___	___
d. Hot water piping tested.	___	___	X	X	X	___	___	___
e. Makeup water piping installed.	___	___	X	X	X	___	___	___
f. Vacuum breaker installed on shell of shell and tube unit.	___	___	X	X	X	___	___	___
g. Air vent installed as specified.	___	___	X	X	X	___	___	___
h. Manufacturer's required maintenance clearance provided.	___	___	X	X	X	___	___	___
Startup								
a. Hot water system cleaned and filled.	___	___	X	X	X	___	___	___
b. All steam traps operational.	___	___	X	X	X	___	___	___
c. All condensate return pumps operational.	___	___	___	X	___	___	___	___
d. Converter safety/protection devices tested.	___	___	X	X	X	___	___	___
e. Converter startup and checkout complete.	___	___	X	X	X	___	___	___
Controls								
a. Control valves/actuators properly installed.	___	___	X	___	___	___	___	___
b. Control valves/actuators operable.	___	___	X	___	___	___	___	___

Pre-commissioning Checklist - Fan Coil Unit (Each Fan Coil Unit)

For Fan Coil Unit: FCU-1.

Checklist Item	Q	M	E	T	C	D	O	U
Installation								
a. Vibration isolation devices installed.	___	___	X	X	X	___	___	___
b. Access doors/removable panels are operable and sealed.	___	___	X	___	X	___	___	___
c. Casing undamaged.	___	___	X	X	X	___	___	___
d. Insulation undamaged.	___	___	X	X	X	___	___	___
e. Condensate drainage is unobstructed.	___	___	X	X	X	___	___	___
f. Fan belt adjusted.	___	___	X	___	X	___	___	___
g. Any damage to coil fins has been repaired.	___	___	X	___	X	___	___	___
h. Manufacturer's required maintenance clearance provided.	___	___	X	X	X	___	___	___
Electrical								
a. Power available to unit disconnect.	___	___	___	X	___	___	___	___
b. Power available to unit control panel.	___	___	___	X	___	___	___	___
c. Proper motor rotation verified.	___	___	___	___	X	___	___	___
d. Verify that power disconnect is located within sight of the unit it controls.	___	___	___	X	___	___	___	___
Coils								
a. Chilled water piping properly connected.	___	___	X	X	X	___	___	___
b. Chilled water piping pressure tested.	___	___	X	X	X	___	___	___
c. Hot water piping properly connected.	___	___	X	___	___	___	___	___
d. Hot water piping pressure tested.	___	___	X	___	___	___	___	___
Controls								
a. Control valves/actuators properly installed.	___	___	X	___	___	___	___	___
b. Control valves/actuators operable.	___	___	X	X	___	___	___	___

Pre-commissioning Checklist - Fan Coil Unit (Each Fan Coil Unit)

For Fan Coil Unit: FCU-1.

Checklist Item	Q	M	E	T	C	D	O	U
c. Verify proper location and installation of thermostat.	___	___	X	___	___	___	___	___
Testing, Adjusting, and Balancing (TAB)								
a. Construction filters removed and replaced.	__	___	X	___	___	___	___	___
b. TAB results +10%/-0% of cfm shown on drawings								
c. TAB Report submitted.	___	___	X	___	X	___	___	___

Pre-commissioning Checklist - Electric Unit Heater (Each Unit Heater)

For Unit Heater: EUH-1, and EUH-2

Checklist Item	Q	M	E	T	C	D	O	U
Installation								
a. Manufacturer's required maintenance/ operational clearance provided.	___	___	X	X	X	___	___	___
Electrical								
a. Power available to unit disconnect.	___	___	___	X	___	___	___	___
b. Proper motor rotation verified.	___	___	___	X	X	___	___	___
c. Verify that power disconnect is located within sight of the unit it controls.	___	___	___	X	___	___	___	___
d. Power available to electric heating coil.	___	___	___	X	___	___	___	___
Controls								
a. Verify proper location and installation of thermostat.	___	___	X	___	___	___	___	___
Testing, Adjusting, and Balancing (TAB)								
a. TAB Report submitted.	___	___	X	___	X	___	___	___

Pre-commissioning Checklist - Hot Water Unit Heater (Each Unit Heater)

For Unit Heater: UH-1, UH-2, UH-3

Checklist Item	Q	M	E	T	C	D	O	U
Installation								
a. Hot water piping properly connected.	___	___	X	___	___	___	___	___
b. Hot water piping pressure tested.	___	___	X	___	___	___	___	___
c. Air vent installed on hot water coil with shutoff valve as specified.	___	___	X	X	X	___	___	___
d. Any damage to coil fins has been repaired.	__	___	X	___	X	___	___	___
e. Manufacturer's required maintenance/ operational clearance provided.	___	___	X	X	X	___	___	___
Electrical								
a. Power available to unit disconnect.	___	___	___	X	___	___	___	___
b. Proper motor rotation verified.	___	___	___	X	X	___	___	___
c. Verify that power disconnect is located within sight of the unit it controls.	___	___	___	X	___	___	___	___
Controls								
a. Control valves properly installed.	___	___	X	___	___	___	___	___
b. Control valves operable.	___	___	X	X	___	___	___	___
c. Verify proper location and installation of thermostat.	___	___	X	___	___	___	___	___
Testing, Adjusting, and Balancing (TAB)								
a. TAB Report submitted.	___	___	X	___	X	___	___	___

Pre-commissioning Checklist - Exhaust and Supply Fan

For Fan: RF-15, 16, 17, 18, 19, 20, 21, 22, 23, 24, 26, 27, 28, RF-32, 33, 34, and RF-35; SEF-1 through SEF-4; SF-1 through SF-13; SSF 1, 2, 3; EF-1 through EF-90.

Checklist Item	Q	M	E	T	C	D	O	U
Installation								
a. Fan belt adjusted. (if applicable)	___	___	X	___	X	___	___	___
Electrical								
a. Power available to fan disconnect.	___	___	___	X	___	___	___	___
b. Proper motor rotation verified.	___	___	___	___	X	___	___	___
c. Verify that power disconnect is located within sight of the unit it controls.	___	___	___	X	___	___	___	___
Controls								
a. Control interlocks properly installed.	___	___	___	X	___	___	___	___
b. Control interlocks operable.	___	___	___	X	___	___	___	___
c. Dampers/actuators properly installed.	___	___	X	___	___	___	___	___
d. Dampers/actuators operable.	___	___	X	___	___	___	___	___
e. Verify proper location and installation of thermostat.	___	___	X	___	___	___	___	___
Testing, Adjusting, and Balancing (TAB)								
a. TAB results +10%/-0% to cfm shown on drawings	___	___	X	___	X	___	___	___
b. TAB Report submitted.	___	___	X	___	X	___	___	___

Pre-commissioning Checklist - Computer Room Unit

For Computer Room Unit: CRU-1, 2.

Checklist Item	Q	M	E	T	C	D	O	U
Installation								
a. Unit properly supported.	___	___	X	X	X	___	___	___
b. Access doors are operable and sealed.	___	___	X	___	X	___	___	___
c. Casing undamaged.	___	___	X	X	X	___	___	___
d. Insulation undamaged.	___	___	X	X	X	___	___	___
e. Condensate drainage is unobstructed and routed to floor drain.	___	___	X	X	X	___	___	___
f. Fan belt adjusted.	___	___	X	___	X	___	___	___
g. Manufacturer's required maintenance operational clearance provided.	___	___	X	X	X	___	___	___
Electrical								
a. Power available to unit disconnect.	___	___	___	X	X	___	___	___
b. Proper motor rotation verified.	___	___	___	___	X	___	___	___
c. Proper motor rotation verified.	___	___	___	___	X	___	___	___
d. Verify that power disconnect is located within sight of the unit it controls.	___	___	___	X	___	___	___	___
e. Power available to reheat coils.	___	___	___	___	X	___	___	___
f. Emerg. Power Available to Unit Disconnect.	___	___	___	X	X	___	___	___
Coils/Humidifier								
a. Refrigerant piping properly connected.	___	___	X	X	X	___	___	___
b. Refrigerant piping pressure tested.	___	___	X	X	X	___	___	___
e. Humidifier makeup water connected.	___	___	X	X	X	___	___	___
Controls								
a. Control valves operable.	___	___	X	X	___	___	___	___
b. Unit control system operable and verified.	__	___	___	X	___	___	___	___

Pre-commissioning Checklist - Computer Room Unit

For Computer Room Unit: CRU-1, 2.

Checklist Item	Q	M	E	T	C	D	O	U
c. Verify proper location and installation of thermostat.	___	___	X	___	___	___	___	___
Testing, Adjusting, and Balancing (TAB)								
a. Construction filters removed and replaced.	__	___	X	___	X	___	___	___
b. TAB results +10%/-0% cfm shown on drawings.	___	___	X	___	X	___	___	___
c. TAB Report submitted.	___	___	X	___	X	___	___	___

Pre-commissioning Checklist - HVAC System Controls

For HVAC System: HV-15, 16, 17, 18, 19, 20, 21, 22,23, 24, 26, 27, 28; and AHU-32, 33, 34, and 35.

Checklist Item	Q	M	E	T	C	D	O	U
Installation								
a. As-built shop drawings submitted.	___	___	X	X	___	___	___	___
b. Layout of control panel matches drawings.	___	___	X	X	___	___	___	___
c. Framed instructions mounted in or near control panel.	___	___	X	X	___	___	___	___
d. Components properly labeled (on inside and outside of panel).	___	___	X	X	___	___	___	___
e. Control components piped and/or wired to each labeled terminal strip.	___	___	X	X	___	___	___	___
f. EMCS connection made to each labeled terminal strip as shown.	___	___	X	X	___	___	___	___
g. Control wiring and tubing labeled at all terminations, splices, and junctions.	___	___	X	X	___	___	___	___
h. Shielded wiring used on electronic sensors.	__	__	X	X	___	___	___	___
i. Air dryer installed as specified.	___	___	X	X	___	___	___	___
j. Water drain installed as specified.	___	___	X	X	___	___	___	___
Main Power and Control Air								
a. 110 volt AC power available to panel.	___	___	___	X	___	___	___	___
Testing, Commissioning, and Balancing								
a. Testing, Commissioning, and Balancing Report submitted.	___	___	X	___	___	___	___	___

Pre-commissioning Checklist - Single Zone Air Handling Unit

For Air Handling Unit: HV-15, 16, 17, 18, 19, 20, 21, 22, 23, 24, 26, 27, 28; HV-14.

Checklist Item	Q	M	E	T	C	D	O	U
Installation								
a. Vibration isolation devices installed.	__	___	X	X	X	___	___	___
b. Inspection and access doors are operable and sealed.	__	___	X	___	X	___	___	___
c. Casing undamaged.	__	___	X	X	X	___	___	___
d. Insulation undamaged.	__	___	X	X	X	___	___	___
e. Fan belt adjusted.	__	___	X	___	X	___	___	___
f. Any damage to coil fins has been repaired.	__	__	X	___	X	___	___	___
g. Manufacturer's required maintenance clearance provided.	__	___	X	X	X	___	___	___
Electrical								
a. Power available to unit disconnect.	__	___	___	X	X	___	___	___
b. Power available to unit control panel.	__	___	___	X	___	___	___	___
c. Proper motor rotation verified.	___	___	___	__	X	___	___	___
d. Verify that power disconnect is located within sight of the unit it controls.	___	___	__	X	___	___	___	___
Coils								
a. Steam and condensate piping properly connected.	___	___	X	X	X	___	__	___
b. Steam and condensate piping pressure tested.	___	___	X	X	X	__	___	___
c. Any damage to coil fins has been repaired.	___	___	X	___	X	___	___	___
Controls								
a. Control valves/actuators properly installed.	___	___	X	___	___	___	___	___
b. Control valves/actuators operable.	___	___	X	___	___	___	___	___

Pre-commissioning Checklist - Single Zone Air Handling Unit

For Air Handling Unit: HV-15, 16, 17, 18, 19, 20, 21, 22, 23, 24, 26, 27, 28; HV-14.

Checklist Item	Q	M	E	T	C	D	O	U
c. Dampers/actuators properly installed.	___	___	X	___	___	___	___	___
d. Dampers/actuators operable.	___	___	X	___	___	___	___	___
e. Verify proper location and installation of thermostat.	___	___	X	___	___	___	___	___
Testing, Adjusting, and Balancing (TAB)								
a. Construction filters removed and replaced.	___	___	X	___	X	___	___	___
b. TAB results +10%/-0% cfm shown on drawings.	___	___	X	___	X	___	___	___
c. TAB Report submitted.	___	___	X	___	X	___	___	___

Pre-commissioning Checklist - Single Zone Air Handling Unit

For Air Handling Unit: AHU-34, HV-12.

Checklist Item	Q	M	E	T	C	D	O	U
Installation								
a. Vibration isolation devices installed.	__	___	X	X	X	___	___	___
b. Inspection and access doors are operable and sealed.	__	___	X	___	X	___	___	___
c. Casing undamaged.	__	___	X	X	X	___	___	___
d. Insulation undamaged.	__	___	X	X	X	___	___	___
e. Condensate drainage is unobstructed.	__	___	X	X	X	___	___	___
f. Fan belt adjusted.	__	___	X	___	X	___	___	___
g. Any damage to coil fins has been repaired.	__	__	X	___	X	___	___	___
h. Manufacturer's required maintenance clearance provided.	__	___	X	X	X	___	___	___
Electrical								
a. Power available to unit disconnect.	__	___	___	X	X	___	___	___
b. Power available to unit control panel.	__	___	___	X	___	___	___	___
c. Proper motor rotation verified.	___	___	___	__	X	___	___	___
d. Verify that power disconnect is located within sight of the unit it controls.	___	___	__	X	___	___	___	___
Coils								
a. Chilled water piping properly connected.	__	___	X	__	___	___	___	___
b. Chilled water piping pressure tested.	__	___	X	X	X	___	___	___
c. Steam and condensate piping properly connected.	___	___	X	X	X	___	__	___
d. Steam and condensate piping pressure tested.	___	___	X	X	X	__	___	___
e. Air vents installed on water coils [with shutoff valves] as specified.	___	___	X	X	X	__	___	___
f. Any damage to coil fins has been repaired.	___	___	X	___	X	___	___	___

Pre-commissioning Checklist - Single Zone Air Handling Unit

For Air Handling Unit: AHU-34, HV-12.

Checklist Item	Q	M	E	T	C	D	O	U
Controls								
a. Control valves/actuators properly installed.	___	___	X	___	___	___	___	___
b. Control valves/actuators operable.	___	___	X	___	___	___	___	___
c. Dampers/actuators properly installed.	___	___	X	___	___	___	___	___
d. Dampers/actuators operable.	___	___	X	___	___	___	___	___
e. Verify proper location and installation of thermostat.	___	___	X	___	___	___	___	___
Testing, Adjusting, and Balancing (TAB)								
a. Construction filters removed and replaced.	___	___	X	___	X	___	___	___
b. TAB results +10%/-0% cfm shown on drawings.	___	___	X	___	X	___	___	___
c. TAB Report submitted.	___	___	X	___	X	___	___	___

Pre-commissioning Checklist - Energy Recovery System

For Energy Recovery System: HRC-15S thru 28S; HRC-32S thru 35S; HRC-15r thru 28r; HRC 32-r thru 35r; HRC-8e, 14e, 15e, 20e, 22e, 24e.

Checklist Item	Q	M	E	T	C	D	O	U
Installation								
a. Recovery system piping installed.	___	___	X	___	X	___	___	___
b. Recovery system piping tested.	___	___	X	X	X	___	___	___
c. Air vent installed as specified.	___	___	X	X	X	___	___	___
d. Manufacturer's required maintenance clearance provided.	___	___	X	X	X	___	___	___
Startup								
a. Recovery system piping cleaned and filled.	___	___	X	X	X	___	___	___
Controls								
a. Control valves/actuators properly installed.	___	___	X	___	___	___	___	___
b. Control valves/actuators operable.	___	___	X	___	___	___	___	___

APPENDIX B

FUNCTIONAL PERFORMANCE TESTS CHECKLISTS

Functional Performance Test Checklist - Pumps

For Pump: P-1 thru 18; CP-1, 2, 3, 4; Pool Pumps; Sewage Ejector Pumps; Foundation Drainage Pumps; Domestic Water Pumps; Fuel Oil Pumps; Fire Pump.

Prior to performing this checklist, ensure that for closed loop systems, system is pressurized and the make-up water system is operational or, for open loop systems, that the sumps are filled to the proper level.

1. Activate pump start using control system commands (all possible combination, on/auto, etc.). ON_____ AUTO_____ OFF_____

a. Verify pressure drop across strainer:

Strainer inlet pressure _____ psig
Strainer outlet pressure _____ psig

b. Verify pump inlet/outlet pressure reading, compare to Testing, Adjusting, and Balancing (TAB) Report, pump design conditions, and pump manufacturer's performance.

	DESIGN	TAB	ACTUAL
Pump inlet pressure (psig)	_____	_____	_____
Pump outlet pressure (psig)	_____	_____	_____

c. Operate pump at shutoff and at 100 percent of designed flow when all components are in full flow. Plot test readings on pump curve and compare results against readings taken from flow measuring devices.

	SHUTOFF	100 percent
Pump inlet pressure (psig)	_____	_____
Pump outlet pressure	_____	_____
Pump flow rate (gpm)	_____	_____

d. Operate pump at shutoff and at minimum flow or when all components are in full by-pass. Plot test readings on pump curve and compare results against readings taken from flow measuring devices.

	SHUTOFF	100 percent
Pump inlet pressure (psig)	_____	_____
Pump outlet pressure	_____	_____
Pump flow rate (gpm)	_____	_____

2. Verify motor amperage each phase and voltage phase to phase and phase to ground for both the full flow and the minimum flow conditions.

a. Full flow:

	PHASE 1	PHASE 2	PHASE 3
Amperage	_____	_____	_____

Functional Performance Test Checklist - Pumps

For Pump: P-1 thru 18; CP-1, 2, 3, 4; Pool Pumps; Sewage Ejector Pumps; Foundation Drainage Pumps; Domestic Water Pumps; Fuel Oil Pumps; Fire Pump.

Voltage _____ _____
Voltage _____
Voltage to ground _____ _____ _____

b. Minimum flow:

	PHASE 1	PHASE 2	PHASE 3
Amperage	_____	_____	_____
Voltage		_____	_____
Voltage		_____	
Voltage to ground	_____	_____	_____

3. Unusual vibration, noise, etc.

_____

_____

4. Certification: We the undersigned have witnessed the above functional performance tests and certify that the item tested has met the performance requirements in this section of the specifications.

Signature and Date

Contractor's Chief Quality Control Representative _____

Contractor's Mechanical Representative _____

Contractor's Electrical Representative _____

Contractor's Testing, Adjusting and Balancing Representative _____

Contractor's Controls Representative _____

Contracting Officer's Representative _____

Using Agency's Representative _____

Functional Performance Test Checklist - Centrifugal Chiller

For Chiller: RM-1, 2.

1. Functional Performance Test: Contractor shall demonstrate operation of chilled water system as per specifications including the following: Start building air handler to provide load for chiller. Activate controls system chiller start sequence as follows:

a. Time of day startup program initiates chiller start: _____

b. Start condenser water pump and establish condenser water flow. Verify chiller condenser water proof-of-flow switch operation. _____

c. Start chilled water pump and establish chilled water flow. Verify chiller chilled water proof-of-flow switch operation. _____

d. Verify control system energizes chiller start sequence. _____

e. Verify chiller senses chilled water temperature above set point and control system activates chiller start. _____

f. Verify functioning of "soft start" sequence. _____

g. Shut off air handling equipment to remove load on chilled water system. Verify chiller shutdown sequence is initiated and accomplished after load is removed. _____

h. Restart air handling equipment one minute after chiller shut down. Verify condenser water pump, cooling tower, and chiller restart sequence.

_____

2. Certification: We the undersigned have witnessed the above functional performance tests and certify that the item tested has met the performance requirements in this section of the specifications.

Signature and Date

Contractor's Chief Quality Control Representative

_____

Contractor's Mechanical Representative _____

Contractor's Electrical Representative _____

Contractor's Testing, Adjusting and Balancing Representative

_____

Contractor's Controls Representative _____

Contracting Officer's Representative _____

Using Agency's Representative _____

Functional Performance Test Checklist - Centrifugal Chiller

For Chiller: RM-1, 2.

Functional Performance Test Checklist - Cooling Tower

For Cooling Tower: CT-1, 2.

1. Functional Performance Test: Contractor shall demonstrate operation of the cooling tower as per specification and the following:

a. Activate cooling tower fan start using control system command. This should first start condenser water pump, establish flow, delay fan start, as specified, to equalize flow in distribution basin and sump. Verify fan start after timed delay. _____

b. After chiller startup, control system should modulate bypass valve and two-speed fan motor to maintain condenser water set point. Verify function of bypass valve under varying loads. _____

c. Verify cooling tower interlock with chiller. _____

d. Verify makeup water float valve is functioning: _____ Activate chemical treatment feed valve, verify makeup of chemical treatment system, pump, and controls: _____

e. Entering water temperature [_____] degrees F
Leaving water temperature: [_____] degrees F
Air volume measured: [_____] cfm
Air volume calculated: [_____] cfm
Entering wet bulb temperature: [_____] degrees F
Measured water flow: [_____] gpm

2. Certification: We the undersigned have witnessed the above functional performance tests and certify that the item tested has met the performance requirements in this section of the specifications.

Signature and Date

Contractor's Chief Quality Control Representative
_____

Contractor's Mechanical Representative _____

Contractor's Electrical Representative _____

Contractor's Testing, Adjusting and Balancing Representative
_____

Contractor's Controls Representative _____

Contracting Officer's Representative _____

Using Agency's Representative _____

Functional Performance Test Checklist - VAV Terminals

The Contracting officer will select VAV terminals to be spot-checked during the functional performance test. The number of terminals shall not exceed 10 percent.

1. Functional Performance Test: Contractor shall demonstrate operation of selected VAV boxes as per specifications including the following:

a. Cooling only VAV boxes:

(1) Verify VAV box response to room temperature set point adjustment. Turn thermostat to 5 degrees F above ambient and measure maximum air flow. Turn thermostat to 5 degrees F below ambient and measure minimum air flow.

Maximum flow [_____] cfm
Minimum flow [_____] cfm

(2) Check damper maximum/minimum flow settings.

Maximum flow setting [_____] cfm
Minimum flow setting [_____] cfm

b. Cooling with reheat VAV boxes:

(1) Verify VAV box response to room temperature set point adjustment. Turn thermostat to 5 degrees F above ambientand measure maximum air flow. Turn thermostat to 5 degrees F below ambient and measure minimum air flow.

Maximum flow [_____] cfm
Minimum flow [_____] cfm

(2) Check damper maximum/minimum flow settings.

Maximum flow setting [_____] cfm
Minimum flow setting [_____] cfm

Reheat coil operation range (full open to full closed) _____

2. Certification: We the undersigned have witnessed the above functional performance tests and certify that the item tested has met the performance requirements in this section of the specifications.

Signature and Date

Contractor's Chief Quality Control Representative _____

Contractor's Mechanical Representative _____

Functional Performance Test Checklist - VAV Terminals

Contractor's Electrical Representative _____

Contractor's Testing, Adjusting and Balancing Representative _____

Contractor's Controls Representative _____

Contracting Officer's Representative _____

Using Agency's Representative _____

Functional Performance Test Checklist - Variable Volume Air Handling Unit

For Air Handling Unit: AHU-32, 33, 35.

Ensure that a slight negative pressure exists on inboard side of the outside air dampers throughout the operation of the dampers. Modulate OA, RA, and EA dampers from fully open to fully closed positions.

1. Functional Performance Test: Contractor shall verify operation of air handling unit as per specification including the following:

a. The following shall be verified when the supply and return fans operating mode is initiated:

(1) All dampers in normal position and fan inlet vanes modulate to maintain the required static pressure. _____

(2) All valves in normal position. _____

(3) System safeties allow start if safety conditions are met. _____

(4) VAV fan controller shall "soft-start" fan. _____

(5) Modulate all VAV boxes to minimum air flow and verify that the static pressure does not exceed the design static pressure Class shown.
_____

b. Occupied mode of operation - economizer de-energized.

(1) Outside air damper at minimum position. _____

(2) Return air damper open. _____

(3) Relief air damper at minimum position. _____

(4) Chilled water control valve modulating to maintain leaving air temperature set point. _____

(5) Fan VAV controller receiving signal from duct static pressure sensor and modulating fan to maintain supply duct static pressure set point.
_____

c. Occupied mode of operation - economizer energized.

(1) Outside air damper modulated to maintain mixed air temperature set point. _____

(2) Relief air damper modulates with outside air damper according to sequence of operation. _____

(3) Chilled water control valve modulating to maintain leaving air temperature set point. _____

Functional Performance Test Checklist - Variable Volume Air Handling Unit

For Air Handling Unit: AHU-32, 33, 35.

(4) Steam control valve modulating to maintain leaving air temperature set point. _____

(5) Fan VAV controller receiving signal from duct static pressure sensor and modulating fan to maintain supply duct static pressure set point. _____

d. Unoccupied mode of operation

(1) All dampers in normal position. _____

(2) Verify low limit space temperature is maintained as specified in sequence of operation. _____

e. The following shall be verified when the supply and return fans off mode is initiated:

(1) All dampers in normal position. _____

(2) All valves in normal position. _____

(3) Fan de-energizes. _____

f. Verify the chilled water coil control valve operation by setting all VAV's to maximum and minimum cooling.

	Max cooling	Min cooling
Supply air volume (_____ cfm)	_____	_____
Supply air temp. (_____ degrees F)	_____	_____

g. Verify safety shut down initiated by smoke detectors. _____

h. Verify safety shut down initiated by low temperature protection thermostat. _____

2. Certification: We the undersigned have witnessed the above functional performance tests and certify that the item tested has met the performance requirements in this section of the specifications.

Signature and Date

Contractor's Chief Quality Control Representative _____

Contractor's Mechanical Representative _____

Contractor's Electrical Representative _____

Functional Performance Test Checklist - Variable Volume Air Handling Unit

For Air Handling Unit: AHU-32, 33, 35.
Contractor's Testing, Adjusting and Balancing Representative _____

Contractor's Controls Representative _____

Contracting Officer's Representative _____

Using Agency's Representative _____

Functional Performance Test Checklist - Single Zone Air Handling Unit

For Air Handling Unit: HV-15, 16, 17, 17, 18, 19, 20, 21, 22, 23, 24, 26, 27, 28; HV-14.

1. Functional Performance Test: Contractor shall verify operation of air handling unit as per specification including the following:

a. The following shall be verified when the supply and return fans operating mode is initiated:

(1) All dampers in normal position. _____

(2) All valves in normal position. _____

(3) System safeties allow start if safety conditions are met. _____

b. Occupied mode of operation - economizer de-energized.

(1) Outside air damper at minimum position. _____

(2) Return air damper open. _____

(3) Relief air damper [at minimum position] [closed]. _____

(5) Steam control valve modulating to maintain space heating temperature set point input from outside air temperature controller. _____

c. Occupied mode of operation - economizer energized.

(1) Outside air damper modulated to maintain mixed air temperature set point. _____

(2) Relief air damper modulates with outside air damper according to sequence of operation. _____

d. Unoccupied mode of operation

(1) All dampers in normal position. _____

Functional Performance Test Checklist - Single Zone Air Handling Unit

For Air Handling Unit: HV-15, 16, 17, 17, 18, 19, 20, 21, 22, 23, 24, 26, 27, 28; HV-14.

(2) Verify low limit space temperature is maintained as specified in sequence of operation. _____

e. The following shall be verified when the [supply fan off] [supply and return fans off] mode is initiated:

(1) All dampers in normal position. _____

(2) All valves in normal position. _____

(3) Fan de-energizes. _____

g. Verify safety shut down initiated by smoke detectors. _____

h. Verify safety shut down initiated by low temperature protection thermostat. _____

2. Certification: We the undersigned have witnessed the above functional performance tests and certify that the item tested has met the performance requirements in this section of the specifications.

Signature and Date

Contractor's Chief Quality Control Representative _____

Contractor's Mechanical Representative _____

Contractor's Electrical Representative _____

Contractor's Testing, Adjusting and Balancing Representative _____

Contractor's Controls Representative _____

Contracting Officer's Representative _____

Using Agency's Representative _____

Functional Performance Test Checklist - Single Zone Air Handling Unit

For Air Handling Unit: AHU-34, HV-12

1. Functional Performance Test: Contractor shall verify operation of air handling unit as per specification including the following:

a. The following shall be verified when the supply and return fans operating mode is initiated:

(1) All dampers in normal position. _____

(2) All valves in normal position. _____

(3) System safeties allow start if safety conditions are met. _____

b. Occupied mode of operation - economizer de-energized.

(1) Outside air damper at minimum position. _____

(2) Return air damper open. _____

(3) Relief air damper [at minimum position] [closed]. _____

(4) Chilled water control valve modulating to maintain space cooling temperature set point. _____

(5) Steam control valve modulating to maintain space heating temperature set point input from outside air temperature controller. _____

c. Occupied mode of operation - economizer energized.

(1) Outside air damper modulated to maintain mixed air temperature set point. _____

(2) Relief air damper modulates with outside air damper according to sequence of operation. _____

(3) Chilled water control valve modulating to maintain space cooling temperature set point. _____

d. Unoccupied mode of operation

(1) All dampers in normal position. _____

(2) Verify low limit space temperature is maintained as specified in sequence of operation. _____

e. The following shall be verified when the [supply fan off] [supply and return fans off] mode is initiated:

(1) All dampers in normal position. _____

Functional Performance Test Checklist - Single Zone Air Handling Unit

For Air Handling Unit: AHU-34, HV-12

(2) All valves in normal position. _____

(3) Fan de-energizes. _____

f. Verify cooling coil and heating coil operation by varying thermostat set point from cooling set point to heating set point and returning to cooling set point. _____

g. Verify safety shut down initiated by smoke detectors. _____

h. Verify safety shut down initiated by low temperature protection thermostat. _____

2. Certification: We the undersigned have witnessed the above functional performance tests and certify that the item tested has met the performance requirements in this section of the specifications.

Signature and Date

Contractor's Chief Quality Control Representative _____

Contractor's Mechanical Representative _____

Contractor's Electrical Representative _____

Contractor's Testing, Adjusting and Balancing Representative _____

Contractor's Controls Representative _____

Contracting Officer's Representative _____

Using Agency's Representative _____

Functional Performance Test Checklist - Air Cooled Condensing Unit

For Condensing Unit: CU-1, 2, 3, 4.

1. Functional Performance Test: Contractor shall demonstrate operation of refrigeration system as per specifications including the following: Start building air handler to provide load for condensing unit. Activate controls system start sequence as follows.

a. Start air handling unit. Verify control system energizes condensing unit start sequence. _____

b. Shut off air handling equipment to verify condensing unit de-energizes. _____

c. Restart air handling equipment one minute after condensing unit shut down. Verify condensing unit restart sequence. _____

2. Verify condensing unit amperage each phase and voltage phase to phase and phase to ground.

	PHASE 1	PHASE 2	PHASE 3
Amperage	_____	_____	_____
Voltage	_____	_____	
Voltage	_____		
Voltage to ground	_____	_____	_____

3. Record the following information:

Ambient dry bulb temperature	_____	degrees F
Ambient wet bulb temperature	_____	degrees F
Suction pressure	_____	psig
Discharge pressure	_____	psig

4. Unusual vibration, noise, etc.

_____

_____

5. Certification: We the undersigned have witnessed the above functional performance tests and certify that the item tested has met the performance requirements in this section of the specifications.

Signature and Date

Contractor's Chief Quality Control Representative _____

Contractor's Mechanical Representative _____

Functional Performance Test Checklist - Air Cooled Condensing Unit

For Condensing Unit: CU-1, 2, 3, 4.

Contractor's Electrical Representative Representative _____

Contractor's Testing, Adjusting and Balancing _____

Contractor's Controls Representative _____

Contracting Officer's Representative _____

Using Agency's Representative _____

Functional Performance Test Checklist - Fan Coil Units

The Contracting Officer will select fan coil units to be spot-checked during the functional performance test. The number of terminals shall not exceed 10 percent.

1. Functional Performance Test: Contractor shall demonstrate operation of selected fan coils as per specifications including the following:

a. Cooling/heating fan coils:

(1) Verify fan coil unit response to room temperature set point adjustment. Changes to be cooling set point to heating set point and return to cooling set point. _____

(2) Check blower fan air flow.
Check blower fan air flow. _____ cfm

(3) Check cooling coil water flow.
Check cooling coil water flow. _____ cfm

(4) Verify proper operation of cooling water control valve. _____

(5) Check cooling mode inlet air temperature.
Check cooling mode inlet air temperature. _____ degrees F

(6) Check cooling mode outlet air temperature.
Check cooling mode outlet air temperature. _____ degrees F

(7) Check heating coil water flow.
Check heating coil water flow. _____ gpm

(8) Verify proper operation of heating water control valve. _____

(9) Check heating mode inlet air temperature.
Check heating mode inlet air temperature. _____ degrees F

(10) Check heating mode outlet air temperature.
Check heating mode outlet air temperature. _____ degrees F

2. Certification: We the undersigned have witnessed the above functional performance tests and certify that the item tested has met the performance requirements in this section of the specifications.

Signature and Date

Contractor's Chief Quality Control Representative _____

Contractor's Mechanical Representative _____

Contractor's Electrical Representative _____

Functional Performance Test Checklist - Fan Coil Units
Contractor's Testing, Adjusting and Balancing Representative

_____

Contractor's Controls Representative _____

Contracting Officer's Representative _____

Using Agency's Representative _____

Functional Performance Test Checklist - Unit Heaters

The Contracting Officer will select unit heaters to be spot-checked during the functional performance test. The number of terminals shall not exceed 10 percent.

1. Functional Performance Test: Contractor shall demonstrate operation of selected unit heaters as per specifications including the following:

a. Verify unit heater response to room temperature set point adjustment. Changes to be heating set point to heating set point minus 10 degrees and return to heating set point. _____

b. Check blower fan speed. _____rpm

c. Check heating mode inlet air temperature. Check heating mode inlet air temperature. _____ degrees F

d. Check heating mode outlet air temperature. Check heating mode outlet air temperature. _____ degrees F

2. Certification: We the undersigned have witnessed the above functional performance tests and certify that the item tested has met the performance requirements in this section of the specifications.

Signature and Date

Contractor's Chief Quality Control Representative
_____

Contractor's Mechanical Representative _____

Contractor's Electrical Representative _____

Contractor's Testing, Adjusting and Balancing Representative
_____

Contractor's Controls Representative _____

Contracting Officer's Representative _____

Using Agency's Representative _____

Functional Performance Test Checklist - Steam/Hot Water Converter

For Converter: HX-1, 2, 3, 4, 5, 6.

1. Functional Performance Test: Contractor shall demonstrate operation of heating system as per specifications including the following: Start building heating equipment to provide load for converter.

a. Verify control system energizes. _____

b. Verify converter senses hot water temperature below set point and control system modulates steam valve. _____

c. Shut off building heating equipment to remove load on heating system. Verify converter steam valve closes after load is removed. _____

2. Verify converter inlet/outlet pressure reading, compare to converter design conditions and manufacturer's performance data.

	DESIGN	ACTUAL
Converter inlet water temp (degrees F)	_____	_____
Converter outlet water temp (degrees F)	_____	_____
Converter inlet steam pressure (psig)	_____	_____
Determine water flow rate based on pressure drop through converter	_____	_____
Determine water flow rate with flow measuring device	_____	_____
Verify that temperature of water is in accordance with outdoor air reset schedule	_____	_____

3. Verify proper operation of converter safeties. _____

4. Check and report unusual vibration, noise, etc.

_____

_____

5. Certification: We the undersigned have witnessed the above functional performance tests and certify that the item tested has met the performance requirements in this section of the specifications.

Signature and Date

Contractor's Chief Quality Control Representative

_____

Contractor's Mechanical Representative _____

Contractor's Electrical Representative _____

Contractor's Testing, Adjusting and Balancing Representative

_____

Functional Performance Test Checklist - Steam/Hot Water Converter

For Converter: HX-1, 2, 3, 4, 5, 6.

Contractor's Controls Representative _____

Contracting Officer's Representative _____

Using Agency's Representative _____

Functional Performance Test Checklist - Computer Room Unit

For Computer Room Unit: CRU-1, 2.

1. Functional Performance Test: Contractor shall verify operation of computer room unit as per specification including the following:

a. System safeties allow start if safety conditions are met. _____

b. Verify cooling and heating operation by varying thermostat set point from space set point to space set point plus 10 degrees, space set point minus 10 degrees, and returning to space set point. _____

c. Verify humidifier operation by varying humidistat set point from space set point to space set point plus 20 percent RH, and returning to space set point. _____

d. Verify that airflow is within +10/-0 percent of design airflow. _____

e. Verify unit shut down during fire event initiated by smoke/heat sensors. _____

2. Certification: We the undersigned have witnessed the above functional performance tests and certify that the item tested has met the performance requirements in this section of the specifications.

Signature and Date

Contractor's Chief Quality Control Representative _____

Contractor's Mechanical Representative _____

Contractor's Electrical Representative _____

Contractor's Testing, Adjusting and Balancing Representative _____

Contractor's Controls Representative _____

Contracting Officer's Representative _____

Using Agency's Representative _____

Functional Performance Test Checklist - HVAC Controls

For HVAC System: HV-15, 16, 17, 18, 19, 20, 21, 22, 23, 24, 26, 27, 28; AHU-32, 33, 34, 35; HV-12, HV-14.

The Contracting Officer will select HVAC control systems to undergo functional performance testing.

1. Functional Performance Test: Contractor shall verify operation of HVAC controls by performing the following tests:

a. Verify that controller is maintaining the set point by manually measuring the controlled variable with a thermometer, sling psychrometer, inclined manometer, etc.

b. Verify sensor/controller combination by manually measuring the controlled medium. Take readings from control panel display and compare readings taken manually. Record all readings.

Sensor _____
Manual measurement _____
Panel reading value _____

c. Verify system stability by changing the controller set point as follows:

(1) Air temperature - 10 degrees F

(2) Water temperature - 10 degrees F

(3) Static pressure - 10 percent of set point

(4) Relative humidity - percent (RH)

The control system shall be observed for 10 minutes after the change in set point. Instability or excessive hunting will be unacceptable.

d. Verify interlock with other HVAC controls.

e. Verify interlock with fire alarm control panel.

f. Verify interlock with EMCS.

[g. Change controller set point 10 percent with EMCS and verify correct response.]

2. Verify that operation of control system conforms to that specified in the sequence of operation.

3. Certification: We the undersigned have witnessed the above functional performance tests and certify that the item tested has met the performance requirements in this section of the specifications.

Functional Performance Test Checklist - HVAC Controls

For HVAC System: HV-15, 16, 17, 18, 19, 20, 21, 22, 23, 24, 26, 27, 28; AHU-32, 33, 34, 35; HV-12, HV-14.

Signature and Date

Contractor's Chief Quality Control Representative _____

Contractor's Mechanical Representative _____

Contractor's Electrical Representative _____

Contractor's Testing, Adjusting and Balancing Representative _____

Contractor's Controls Representative _____

Contractor's Officer's Representative _____

Using Agency's Representative _____

Functional Performance Test Checklist - Energy Recovery System

For Energy Recovery System: HRC-15s thru 28s; 32s thru 35s; HRC-15r thru 28r; 32r thru 35r; HRC-8e, 14e, 15e, 20e, 22e, 24e.

1. Functional Performance Test: Contractor shall demonstrate operation of energy recovery system as per specifications including the following: Start equipment to provide energy source for recovery system.

a. Verify energy source is providing recoverable energy. _____

b. Verify recovery system senses available energy and activates. ____

c. Verify that recovery system deactivates when recoverable energy is no longer available. _____

2. Verify recovery system inlet/outlet readings, compare to design conditions and manufacturer's performance data.

	Design	Actual
Primary loop inlet temp (degrees F)	_____	_____
Primary loop outlet temp (degrees F)	_____	_____
Primary loop flow rate	_____	_____
Secondary loop inlet temp (degrees F)	_____	_____
Secondary loop outlet temp (degrees F)	_____	_____
Energy recovered BTU's)	_____	_____

3. Check and report unusual vibration, noise, etc.

_____

_____

4. Certification: We the undersigned have witnessed the above functional performance tests and certify that the item tested has met the performance requirements in this section of the specifications.

Signature and Date

Contractor's Chief Quality Control Representative_____

Contractor's Mechanical Representative _____

Contractor's Electrical Representative _____

Contractor's Testing , Adjusting and Balancing Representative _____

Contractor's Controls Representative _____

Contractor's Officer's Representative _____

Functional Performance Test Checklist - Energy Recovery System

For Energy Recovery System: HRC-15s thru 28s; 32s thru 35s; HRC-15r thru 28r; 32r thru 35r; HRC-8e, 14e, 15e, 20e, 22e, 24e.
Using Agency's Representative _____

-- End of Section --

SECTION 16263

DIESEL-GENERATOR SET STATIONARY 100-2500 KW, WITH AUXILIARIES

PART 1 GENERAL

1.1 REFERENCES

The publications listed below form a part of this specification to the extent referenced. The publications are referred to in the text by basic designation only.

AMERICAN NATIONAL STANDARDS INSTITUTE (ANSI)

ANSI C12.11	(1987; R 1993) Instrument Transformers for Revenue Metering, 10 kV BIL through 350 kV BIL (0.6 kV NSV through 69 kV NSV)

AMERICAN SOCIETY FOR TESTING AND MATERIALS (ASTM)

ASTM A 53	(1996) Pipe, Steel, Black and Hot-Dipped, Zinc-Coated, Welded and Seamless
ASTM A 106	(1995) Seamless Carbon Steel Pipe for High-Temperature Service
ASTM A 181/A 181M	(1995b) Carbon Steel Forgings for General-Purpose Piping
ASTM A 234/A 234M	(1996b) Piping Fittings of Wrought Carbon Steel and Alloy Steel for Moderate and Elevated Temperatures
ASTM D 975	(1996a) Diesel Fuel Oils

AMERICAN SOCIETY OF MECHANICAL ENGINEERS (ASME)

ASME B16.3	(1992) Malleable Iron Threaded Fittings
ASME B16.5	(1996) Pipe Flanges and Flanged Fittings NPS 1/2 thru NPS 24
ASME B16.11	(1991) Forged Fittings, Socket-Welding and Threaded
ASME B31.1	(1995; B31.1a; B31.1b) Power Piping
ASME BPV IX	(1995; Addenda Dec 1995, Dec 1996) Boiler and Pressure Vessel Code; Section IX, Welding and Brazing Qualifications

INSTITUTE OF ELECTRICAL AND ELECTRONICS ENGINEERS (IEEE)

IEEE C2	(1997) National Electrical Safety Code
IEEE ANSI/IEEE C57.13.1	(1981; R 1992) IEEE Guide for Field Testing of Relaying Current Transformers
IEEE Std 43	(1974; R 1991) Testing Insulation Resistance of Rotating Machinery
IEEE Std 95	(1977; R 1991) Insulation Testing of Large AC Rotating Machinery with High Direct Voltage
IEEE Std 112	(1991) Standard Test Procedure for Polyphase Induction Motor and Generators
IEEE Std 115	(1995) Test Procedures for Synchronous Machines

MANUFACTURERS STANDARDIZATION SOCIETY OF THE VALVE AND FITTINGS INDUSTRY (MSS)

MSS SP-58	(1993) Pipe Hangers and Supports - Materials, Design and Manufacture
MSS SP-69	(1996) Pipe Hangers and Supports - Selection and Application
MSS SP-80	(1997) Bronze Gate, Globe, Angle and Check Valves

MILITARY STANDARDS (MIL-STD)

MIL-STD 705	(Rev C) Generator Sets, Engine Driven Methods of Tests and Instructions

NATIONAL ELECTRICAL MANUFACTURERS ASSOCIATION (NEMA)

NEMA ICS 6	(1993) Industrial Control and Systems, Enclosures
NEMA MG 1	(1993; Rev 1; Rev 2; Rev 3) Motors and Generators
NEMA PB 1	(1990) Panelboards

NATIONAL FIRE PROTECTION ASSOCIATION (NFPA)

NFPA 30	(1996; Errata) Flammable and Combustible Liquids Code
NFPA 37	(1997) Installation and Use of Stationary

	Combustion Engines and Gas Turbines
NFPA 70	(1999) National Electrical Code

SOCIETY OF AUTOMOTIVE ENGINEERS (SAE)

SAE ARP 892	(1994; R 1994) D-C Starter-Generator, Engine
SAE J 537	(1994) Storage Batteries

UNDERWRITERS LABORATORIES (UL)

UL 1236	(1994; Rev thru Apr 1996) Battery Chargers for Charging Engine-Starter Batteries

1.2 SYSTEM DESCRIPTION

Each engine-generator set shall be provided and installed complete and totally functional, with all necessary ancillary equipment to include: air filtration; starting system; generator controls, protection, and isolation; instrumentation; lubrication; fuel system; cooling system; and engine exhaust system. Each engine-generator set shall satisfy the requirements specified in the Engine-Generator Parameter Schedule.

1.2.1 Engine-Generator Parameter Schedule

ENGINE-GENERATOR PARAMETER SCHEDULE

Power Rating	Standby
Service Load	1260 kVA
Motor Starting kVA	250 kVA (Largest Motor Load)
Power Factor	0.8 lagging
Engine-Generator Applications	stand-alone
Maximum Speed	1800 rpm
Heat Exchanger Type	fin-tube (radiator) (Dual Circuit)
Governor Type	Isochronous
Frequency Bandwidth (steady state)	plus/minus 0.25 percent
Frequency Regulation (droop) (No Load to Full Load	5 percent (maximum)
Voltage Regulation (No Load to Full Load)	plus/minus 2 percent (maximum)

ENGINE-GENERATOR PARAMETER SCHEDULE

Voltage Bandwidth (steady state)	plus/minus 0.5 percent
Frequency	60 Hz
Voltage	480/277 volts
Phases	3 Phase, Wye
Minimum Generator Subtransient Reactance	12 percent
Nonlinear Loads	100 kVA
Max Step Load Increase	60-70 percent of Service Load at .8 PF
Transient Recovery Time with Step Load Increase (Voltage)	10 seconds
Transient Recovery Time with Step Load Increase (Frequency)	10 seconds
Maximum Voltage Deviation with with Step Load Increase	20 percent of rated voltage
Maximum Frequency Deviation with Step Load Increase	12 percent of rated frequency
Max Step Load Decrease	100 percent of Service Load at .8 pf
Max Time to Start and be Ready to Assume Load	10 seconds
Max Summer Indoor Temp (Prior to Genset Operation)	90 degrees F
Min Winter Indoor Temp (Prior to Genset Operation)	30 degrees F
Max Allowable Heat Transferred To Engine Generator Space at Rated Output Capacity	1200 MBTU/hr
Max Summer Outdoor Temp (Ambient)	110 degrees F
Min Winter Outdoor Temp (Ambient)	0 degrees F
Seismic Zone	2A

ENGINE-GENERATOR PARAMETER SCHEDULE

Installation Elevation	151 above sea level

1.2.2 Rated Output Capacity

Each engine-generator-set shall provide power equal to the sum of Service Load plus the machine's efficiency loss and associated ancillary equipment loads. Rated output capacity shall also consider engine and/or generator oversizing required to meet requirements in paragraph Engine-Generator Parameter Schedule.

1.2.3 Power Ratings

Each standby power engine-generator set application shall be capable of 500 cumulative hours of operation per year with a maximum period of continuous operation of 300 hours at output capacity.

1.2.4 Transient Response

The engine-generator set governor and voltage regulator shall cause the engine-generator set to respond to the maximum step load changes such that output voltage and frequency recover to and stabilize within the operational bandwidth within the transient recovery time. The engine-generator set shall respond to maximum step load changes such that the maximum voltage and frequency deviations from bandwidth are not exceeded.

1.2.5 Reliability and Durability

Each standby engine-generator set shall have both an engine and a generator capable of delivering the specified power on a standby basis with an anticipated mean time between overhauls of no less than 5,000 hours up to 400 kW, 7,500 hours up to 800 kW, 10,000 hours up to 1250 kW, and 15,000 hours up to 2500 kW operating with an 80 percent load factor. Two like engines and two like generators shall be cited that have performed satisfactorily in a stationary power plant, independent and separate from the physical location of the manufacturer's and assembler's facilities, for standby without any failure to start, including all periodic exercise. Each like engine and generator shall have had no failures resulting in downtime for repairs in excess of 72 hours nor any failure due to overheating during the 2 consecutive years of service. Like engines shall be of the same model, speed, bore, stroke, number and configuration of cylinders, and rated output capacity. Like generators shall be of the same model, speed, pitch, cooling, exciter, voltage regulator and rated output capacity.

1.3 GENERAL REQUIREMENTS

1.3.1 Engine-Generator Set

Each set shall consist of one engine, one generator, and one exciter mounted, assembled, and aligned on one base; and other necessary ancillary equipment which may be mounted separately. Sets shall be assembled and

attached to the base prior to shipping. Each set component shall be environmentally suitable for the location shown and shall be the manufacturer's standard product offered in catalogs for commercial or industrial use. Any nonstandard products or components and the reason for their use shall be specifically identified in paragraph SUBMITTALS.

1.3.2 Nameplates

Each major component of this specification shall have the manufacturer's name, type or style, model or serial number and rating on a plate secured to the equipment. As a minimum, nameplates shall be provided for:

Engines	Relays
Generators	Transformers (CT & PT)
Regulators	Day tanks
Pumps and pump motors	Governors
Generator Breaker	Air Starting System
Economizers	Heat exchangers (other than base mounted)

Where the following equipment is not provided as a standard component by the diesel engine generator set manufacturer, the nameplate information may be provided in the maintenance manual in lieu of nameplates.

Battery charger	Heaters
Switchboards	Exhaust mufflers
Switchgear	Silencers
Battery	Exciters

1.3.3 Personnel Safety Devices

Exposed moving parts, parts that produce high operating temperatures, parts which may be electrically energized, and parts that may be a hazard to operating personnel shall be insulated, fully enclosed, guarded, or fitted with other types of safety devices. The safety devices shall be installed so that proper operation of the equipment is not impaired.

1.3.4 Verification of Dimensions

Before performing any work, the premises shall be visited and all details of the work verified. The Contracting Officer shall be advised in writing of any discrepancies.

1.3.5 Conformance to Codes and Standards

Where equipment is specified to conform to requirements of any code or standard such as UL, NEMA, etc., the design, fabrication and installation shall also conform to the code.

1.3.6 Site Welding

Structural members shall be welded in accordance with Section 05055 WELDING, STRUCTURAL. For all other welding, procedures and welders shall be qualified in accordance with ASME BPV IX. Welding procedures qualified

by others, and welders and welding operators qualified by a previously qualified employer may be accepted as permitted by ASME B31.1. Welder qualification tests shall be performed for each welder whose qualifications are not in compliance with the referenced standards. The Contracting Officer shall be notified 24 hours in advance of qualification tests. The qualification tests shall be performed at the work site if practical. The welder or welding operator shall apply his assigned symbol near each weld he makes as a permanent record.

1.3.7 Vibration Limitation

The maximum engine-generator set vibration in the horizontal, vertical, and axial directions shall be limited to 6 mils (peak-peak RMS), with an overall velocity limit of 0.95 inches/second RMS.

1.3.8 Vibration Isolation

The engine-generator set shall be provided with a vibration-isolation system in accordance with the manufacturer's standard recommendation. Vibration-isolation systems shall be designed and qualified (as an integral part of the base and mounting system) to the seismic zone specified. Where the vibration-isolation system does not secure the base to the structure floor or unit foundation, seismic restraints shall be provided in accordance with the seismic zone specified.

1.3.9 Harmonic Requirements

Non-linear loads to be served by each engine-generator set are as indicated. The maximum linear load demand (kVA @ PF) when non-linear loads will also be in use is as indicated.

1.3.10 Starting Time Requirements

Upon receipt of a signal to start, each engine generator set will start, reach rated frequency and voltage and be ready to assume load within the time specified. For standby sets used in emergency power applications, each engine generator set will start, reach rated frequency and voltage, and power will be supplied to the load terminals of the automatic transfer switch within the starting time specified.

1.3.11 Experience

Each component manufacturer shall have a minimum of 10 years experience in the manufacture, assembly and sale of components used with stationary diesel engine-generator sets for commercial and industrial use. The engine-generator set manufacturer/assembler shall have a minimum of 10 years experience in the manufacture, assembly and sale of stationary diesel engine-generator sets for commercial and industrial use.

1.3.12 Field Engineer

The engine-generator set manufacturer or assembler shall furnish a qualified field engineer to supervise the complete installation of the engine-generator set, assist in the performance of the onsite tests, and

instruct personnel as to the operational and maintenance features of the equipment. The field engineer shall have attended the engine generator manufacturer's training courses on installation operation and maintenance of engine generator sets.

1.3.13 Louver Damper Connections

Louver damper connections shall be tapped off the generator output line ahead of the line protective devise in the control panel. Provide 15 amp fused, single-phase connection in control panel. One such connection shall be included for each electrically operated automatic louver damper provided for the generating set in ventilating openings for the room housing the set. The connections shall be without switches or any other controls and shall be such that the louver dampers open directly in response to the appearance of the voltage at the output of the generator.

1.4 SUBMITTALS

Government approval is required for submittals with a "GA" designation; submittals having an "FIO" designation are for information only. The following shall be submitted in accordance with Section 01330 SUBMITTAL PROCEDURES:

SD-01 Data

Equipment and Performance; GA.

Calculations of the engine and generator output power capability, including efficiency and parasitic load data.

Harmonic and Non-linear Load Capability; GA.

Description of the generator features which mitigate the effects of the non-linear loads listed.

Torsional Vibration; GA.

Calculations which show that no damaging or dangerous torsional vibrations will occur when the prime mover is connected to the generator.

Day Tank Capacity; GA.

Calculations for the capacity of each day tank.

Power Factor Capability Curve; GA.

The generator capability curve showing generator kVA output capability (kW vs. kvar) for both leading and lagging power factors ranging from 0 to 1.0.

Cooling Equipment and Performance; GA.

A letter which certifies that the engine-generator set and cooling system function properly in the ambient temperature specified.

a. The maximum allowable inlet temperature of the coolant fluid.

b. The minimum allowable inlet temperature of the coolant fluid.

c. The maximum allowable temperature rise in the coolant fluid through the engine.

Alarm Set Points; GA.

The magnitude of monitored values which define alarm or action set points, and the tolerance (plus and/or minus) at which the devices activate the alarm or action for items contained within the alarm panels.

Generator Data; GA.

Manufacturer's standard data for each generator (prototype data at the specified rating or above is acceptable), listing the following information:

Temperature rise in accordance with NEMA MG 1, Part 22.

Direct-Axis synchronous reactance (per unit).

Direct-Axis transient reactance (per unit).

Direct-Axis subtransient reactance (per unit).

Quadrature synchronous reactance (per unit).

Quadrature subtransient reactance (per unit).

Zero sequence reactance (per unit).

Negative sequence reactance and impedance (per unit).

Direct-Axis transient open-circuit time constant (seconds).

Direct-Axis short circuit time constant (seconds).

The generator kW rating and short circuit current capacity (both symmetric and asymmetric)

Manufacturer's Catalog; GA.

Manufacturer's standard catalog data describing and depicting each engine-generator set and all ancillary equipment in sufficient detail to demonstrate complete specification compliance.

Site Welding; FIO.

A copy of qualifying procedures and a list of names and identification symbols of qualified welders and welding operators.

Spare Parts; FIO.

A complete list of spare parts for each piece of equipment and a complete list of all material and supplies needed for continued operation. Lists shall include supply source and current prices. Each list shall be separated into two parts, those elements recommended by the manufacturer to be replaced after 3 years of service, and the remaining elements.

Training; FIO.

A letter giving the date proposed for conducting the onsite training course, the agenda of instruction, a description of the video taping service to be provided, and the kind and quality of the tape to be left with the Contracting Officer at the end of the instructional period.

Battery Charger; GA.

Battery charger sizing calculations.

Vibration-Isolation; FIO.

Vibration isolation system performance data for the range of frequencies generated by the engine-generator set during operation from no load to full load and the maximum vibration transmitted to the floor. Description of seismic qualification of the engine-generator mounting, base, and vibration isolation.

SD-04 Drawings

Layout and Shop Drawings; GA.

Drawings shall include the following:

a. Base-mounted equipment, complete with base and attachments, including anchor bolt template and recommended clearances for maintenance and operation.

b. Complete starting system.

c. Complete fuel system.

d. Complete cooling system.

e. Complete exhaust system.

f. Layout of relays, breakers, and switches including applicable single line and wiring diagrams with written description of sequence of operation and the instrumentation provided.

g. The complete lubrication system, including piping, pumps, strainers, filters, electric heater, controls and wiring.

h. Location, type, and description of vibration isolation devices for all applications.

i. The safety system, together with a detailed description of how it

is to work. Wiring schematics, safety devices with a listing of their normal ranges, alarm and shutdown values (to include operation parameters such as pressures, temperatures voltages, currents, and speeds) shall be included.

j. One-line schematic and wiring diagrams of the generator, exciter, regulator, governor, and instrumentation.

k. Layout of each panel.

l. Mounting and support for each panel and major piece of electrical equipment.

m. Engine-generator set lifting points and rigging instructions.

As-Built Drawings; GA.

Drawings which accurately depict the as-built configuration of the installation, upon acceptance of the diesel-generator set installation.

SD-06 Instructions

Posted Data; GA.

Posted data including wiring and control diagrams showing the key mechanical and electrical control elements, and a complete layout of the entire system.

Framed Instructions; GA.

Instructions including: the manufacturers pre-start checklist and precautions; startup procedures for test-mode, manual-start mode, and automatic-start mode (as applicable); running checks, procedures, and precautions; and shutdown procedures, checks, and precautions.

SD-08 Statements

Qualifications; FIO.

Documentation to demonstrate that:

a. Each component manufacturer has a minimum of 3 years experience in the manufacture, assembly and sale of components used with stationary diesel engine-generator sets for commercial and industrial use.

b. The engine-generator set manufacturer/assembler has a minimum of 10 years experience in the manufacture, assembly and sale of stationary diesel engine-generator sets for commercial and industrial use.

c. The field engineer is qualified to perform the specified functions.

d. Certification that the engine-generator set and cooling system

function properly in the ambient temperatures specified.

Welder Qualification; FIO.

A letter listing the welder qualifying procedures for each welder, complete with supporting data such as test procedures used, what was tested to, and a list of the names of all welders and their identification symbols.

Installation Procedures; FIO.

A copy of the manufacturer's installation procedures and a detailed description of the manufacturer's recommended break-in procedure.

Listing of Product Installations; FIO.

A list of five installations using each type of engine and generator proposed for use. Each component used as the basis for the durability and reliability certification shall be identified in the list. The list shall give the name of installations, completion dates, and name and telephone number of a point of contact.

SD-09 Reports

Factory Inspection and Tests; FIO.

Six complete reproducible copies of the factory inspection result on the checklist format specified in paragraph FACTORY INSPECTION AND TESTS.

Factory Tests; FIO.

a. A letter giving notice of the proposed dates of factory inspections and tests at least 14 days prior to beginning tests.

b. A detailed description of the manufacturer's procedures for factory tests.

Six copies of the Factory Test data described below in 8-1/2 x 11 inch binders having a minimum of 3 rings from which material may readily be removed and replaced, including a separate section for each test. Sections shall be separated by heavy plastic dividers with tabs. Data plots shall be full size (8-1/2 x 11 inch minimum), showing grid lines, with full resolution.

(1) A detailed description of the procedures for factory tests.

(2) A list of equipment used, with calibration certifications.

(3) A copy of measurements taken, with required plots and graphs.

(4) The date of testing.

(5) A list of the parameters verified.

(6) The condition specified for the parameter.

(7) The test results, signed and dated.

(8) A description of adjustments made.

On Site Tests; FIO.

a. A letter giving notice of the proposed dates of onsite inspections and tests.

b. A detailed description of the Contractor's procedures for onsite tests including the test plan and a listing of equipment necessary to perform the tests.

c. Six copies of the onsite test data described below in 8-1/2 x 11 inch binders having a minimum of 3 rings from which material may readily be removed and replaced, including a separate section for each test. Sections shall be separated by heavy plastic dividers with tabs. Data plots shall be full size (8-1/2 x 11 inch minimum), showing grid lines, with full resolution.

(1) A detailed description of the procedures for onsite tests.

(2) A list of equipment used, with calibration certifications.

(3) A copy of measurements taken, with required plots and graphs.

(4) The date of testing.

(5) A list of the parameters verified.

(6) The condition specified for the parameter.

(7) The test results, signed and dated.

(8) A description of adjustments made.

SD-13 Certificates

Torsional Vibration; FIO.

Torsional analysis and calculations which certify and demonstrate that no damaging or dangerous torsional vibrations will occur when the prime mover is connected to the generator, at synchronous speeds, plus/minus 10%.

Prototype Tests; FIO.

Manufacturer's standard certification that prototype tests were performed for the generator model proposed.

Reliability and Durability; FIO.

A reliability and durability certification letter from the manufacturer and assembler to prove that existing facilities are and have been successfully

utilizing the same components proposed to meet this specification, in similar service. Certification may be based on components, i.e. engines used with different models of generators and generators used with different engines, and does not exclude annual technological improvements made by a manufacturer in his basic standard-model component on which experience was obtained, provided parts interchangeability has not been substantially affected and his current standard model meets the performance requirements specified.

Emissions; FIO.

A certification from the engine manufacturer stating that the engine emissions meet the federal, and New York State Department of Environmental Conservation (NYSDEC) regulations for lowest achievable emission rate requirement for no emissions, and restrictions specified.

Site Visit; FIO.

A letter stating the date the site was visited and listing discrepancies found.

Flywheel Balance; FIO.

A certification stating that the flywheel has been statically and dynamically balanced and is capable of being rotated at 125 percent of rated speed without vibration or damage.

Standards Compliance; FIO.

A certification stating that where materials or equipment are specified to comply with requirements of UL, written proof of such compliance has been obtained. The label or listing of the specified agency, or a written certificate from an approved, nationally recognized testing organization equipped to perform such services, stating that the items have been tested and conform to the requirements and testing methods of the specified agency are acceptable as proof.

Functional Facilities; FIO.

A letter certifying that all facilities are complete and functional; that each system is fully functional; and that each item of equipment is complete, free from damage, adjusted, and ready for beneficial use.

SD-19 Operation and Maintenance Manuals

Operation Manual; GA.

Six copies of the operation manual in 8-1/2 x 11 inch binders, having a minimum of 3 rings from which material may readily be removed and replaced, including a separate section for each system or subsystem. Sections shall be separated by heavy plastic dividers with tabs which identify the material in the section. Drawings shall be folded blue lines, with the title block visible, and placed in 8-1/2 x 11 inch plastic pockets with reinforced holes. One full size reproducible mylar of each drawing shall

accompany the booklets. Mylars shall be rolled and placed in a heavy cardboard tube with threaded caps on each end. The manual shall include: step-by-step procedures for system startup, operation, and shutdown; drawings, diagrams, and single-line schematics to illustrate and define the electrical, mechanical, and hydraulic systems together with their controls, alarms, and safety systems; the manufacturer's name, model number, and a description of equipment in the system. The instructions shall include procedures for interface and interaction with related systems to include automatic transfer switches. Each booklet shall include 1.2 megabyte, 5-1/4 inch floppy disks containing an ASCII file of procedures. The floppy disks shall be placed in 8-1/2 x 11 inch plastic pockets with reinforced holes. The operation manual shall be submitted and approved prior to commencing onsite tests.

Maintenance Manual; GA.

Six copies of the maintenance manual containing the information described below in 8-1/2 x 11 inch binders having a minimum of three rings from which material may readily be removed and replaced, including a separate section for each item listed. Each section shall be separated by a heavy plastic divider with tabs. Drawings shall be folded, with the title block visible, and placed in plastic pockets with reinforced holes.

a. Procedures for each routine maintenance item.

b. Procedures for troubleshooting.

c. Factory-service, take-down overhaul, and repair service manuals, with parts lists.

d. A copy of the posted instructions.

e. A component list which includes the manufacturer's name, address, type or style, model or serial number, rating, and catalog number for the major components specified for nameplates.

Six complete reproducible copies of the final relay and protective device settings. The settings shall be recorded with the name of the company and individual responsible for their accuracy.

Special Tools and Filters; GA.

Two complete sets of special tools required for maintenance (except for electronic governor handset). Special tools are those that only the manufacturer provides, for special purposes, or to reach otherwise inaccessible parts. The tools shall be supplied complete with a suitable tool box. One handset shall be provided for each electronic governor when required to indicate and/or change governor response settings. Two complete sets of filters shall be supplied in a suitable storage box.

1.5 STORAGE AND INSTALLATION

The Contractor shall properly protect material and equipment, before, during, and after installation. Stored items shall be protected from the

weather and contamination. During installation, piping and similar openings shall be capped to keep out dirt and other foreign matter.

PART 2 PRODUCTS

2.1 MATERIALS AND EQUIPMENT

2.1.1 Filter Elements

Fuel-oil, lubricating-oil, and combustion-air filter elements shall be manufacturer's standard.

2.1.2 Instrument Transformers

ANSI C12.11.

2.1.3 Pipe (Sleeves, Fuel/Lube-Oil, Compressed Air, Coolant, and Exhaust)

ASTM A 53, or ASTM A 106 steel pipe. Pipe smaller than 2 inches shall be Schedule 80. Pipe 2 inches and larger shall be Schedule 40.

a. Flanges and Flanged Fittings: ASTM A 181/A 181M, Class 60, or ASME B16.5, Grade 1, Class 150.

b. Pipe Welding Fittings: ASTM A 234/A 234M, Grade WPB or WPC, Class 150 or ASME B16.11, 3000 lb.

c. Threaded Fittings: ASME B16.3, Class 150.

d. Valves: MSS SP-80, Class 150.

e. Gaskets: Manufacturer's standard.

2.1.4 Thermometer for Oil or Water Service

Flush-mounted dial with range to suit the service encountered, standard with the manufacturer.

2.1.5 Pipe Hangers

MSS SP-58 and MSS SP-69.

2.1.6 Electrical Enclosures

2.1.6.1 General

NEMA ICS 6.

2.1.6.2 Panelboards

NEMA PB 1.

2.1.7 Pressure Gauges

Manufacturer's standard.

2.2 ENGINE

Each engine shall operate on No. 2-D diesel fuel conforming to ASTM D 975, shall be designed for stationary applications and shall be complete with ancillaries. The engine shall be a standard production model described in the manufacturer's catalog. The engine shall have turbocharged fuel injection with an after cooler. Injection timing shall be retarded to 4 degrees. The engine shall be 4-stroke-cycle and compression-ignition type. The engine shall be vertical in-line, V-piston type, with a solid cast block or individually cast cylinders. The engine shall have a minimum of twelve cylinders. Each block shall have a coolant drain port.

2.2.1 Transient Load Capability

Each engine shall be capable of receiving and responding to specified maximum step load changes within the transient loading recovery time.

2.2.2 Speed Sensor

Each engine shall be equipped with an overspeed sensor.

2.3 FUEL SYSTEM

The entire fuel system for each engine-generator set shall conform to the requirements of NFPA 30 and NFPA 37 and contain the following elements.

2.3.1 Pumps

2.3.1.1 Main Pump

Each engine shall be provided with an engine driven pump. The pump shall supply fuel at a minimum rate of 200 percent of the expected fuel consumption at 110 percent of full rated output capacity.

2.3.1.2 Auxiliary Fuel Pump

Auxiliary fuel pumps shall be provided to maintain fuel pressure in the main fuel header on the engine. The auxiliary pump shall be driven by a dc electric motor powered by the starting batteries. The auxiliary pump shall be automatically actuated by a pressure-detecting device.

2.3.2 Fuel Filter

A minimum of one full-flow fuel filter shall be provided for each engine. The filter shall be readily accessible and capable of being changed without disconnecting the piping or disturbing other components. The filter shall have inlet and outlet connections plainly marked. An indicating differential pressure gauge shall be provided across the filter.

2.3.3 Relief/Bypass Valve

A relief/bypass valve shall be provided to regulate pressure in the fuel

supply line, return excess fuel to a return line and prevent the build-up of excessive pressure in the fuel system.

2.3.4 Day Tank

The engine shall be provided with a separate self-supporting day tank. Day tank shall be provided with connections for fuel supply line, fuel return line, fuel overflow line, local fuel fill port, gauge, vent line, drain line, and float switch assembly for control. A fuel return line cooler shall be provided as recommended by the manufacturer and assembler. The temperature of the fuel returning to the day tank shall be below the flash point of the fuel. A temperature-sensing device shall be installed in the fuel line.

2.3.4.1 Capacity, Standby

Each day tank shall have capacity to supply fuel to the engine for an uninterrupted 8-hour period at 100% rated load without being refilled, plus any fuel which may be returned to the main fuel storage tank. The calculation of the capacity of each day tank shall incorporate the requirement to stop the supply of fuel into the day tank at 90% of the ultimate volume of the tank.

2.3.4.2 Drain Line

Each day tank drain line shall be accessible and equipped with a shutoff valve. Self-supporting day tanks shall be arranged to allow drainage into a 12 inch tall bucket.

2.3.4.3 Local Fuel Fill

Each local fuel fill port on the day tank shall be provided with a screw-on cap.

2.3.4.4 Fuel Level Controls

a. Each day tank shall have a float-switch assembly to perform the following functions:

(1) Start the supply of fuel into the day tank when the fuel level is at the "Low" level mark, 75% of the rated tank capacity.

(2) Stop the supply of fuel into the day tank when the fuel level is at 90% of the rated tank capacity.

(3) Activate the "Overfill Fuel Level" alarm at 95% of the rated tank capacity.

(4) Activate the "Low Fuel Level" alarm at 70% of the rated tank capacity.

(5) Activate the automatic fuel supply shut-off valve located on the fill line of the day tank and shut down the fuel pump that

supplies fuel to the day tank at 95% of the rated tank capacity. The flow of fuel shall be stopped before any fuel can be forced into the fuel overflow line.

2.3.4.5 Arrangement

Self-supporting day tanks shall either be arranged so that the fuel level in the day tank remains above the suction port of the engine driven fuel pump or be provided with a transfer pump to provide fuel to the engine driven pump. The overflow connection and fuel supply line shall be arranged so that the highest possible fuel level is below the fuel injectors. When the main fuel storage tanks are located below the day tank, a check valve shall be provided in the fuel supply line entering the day tank.

2.3.5 Fuel Supply System

The fuel supply from the main storage of fuel to the day tank shall be as specified in Section 15556 FORCED HOT WATER HEATING SYSTEMS USING WATER AND STEAM HEAT EXCHANGERS, GLYCOL HEAT RECOVERY SYSTEM AND WORK ASSOCIATED WITH DIESEL GENERATOR INSTALLATION.

2.4 LUBRICATION

Each engine shall have a separate lube-oil system conforming to NFPA 30 and NFPA 37. Each system shall be pressurized by engine-driven pumps. System pressure shall be regulated as recommended by the engine manufacturer. A pressure relief valve shall be provided on the crankcase. The crankcase shall be vented in accordance with the manufacturer's recommendation except that it shall not be vented to the engine exhaust system. Crankcase breathers, if provided on engines installed in buildings or enclosures, shall be piped to vent to the outside. The system shall be readily accessible for service such as draining, refilling, etc. Each system shall permit addition of oil and have oil-level indication with the set operating. The system shall utilize an oil cooler as recommended by the engine manufacturer.

2.4.1 Lube-Oil Filter

One full-flow filter shall be provided for each pump. The filter shall be readily accessible and capable of being changed without disconnecting the piping or disturbing other components. The filter shall have inlet and outlet connections plainly marked. An indicating differential pressure gauge shall be provided across the filter.

2.4.2 Lube-Oil Sensors

Each engine shall be equipped with lube-oil temperature and pressure sensors. Temperature sensors shall provide signals for Pre-High and High Lube-Oil indication and alarms. Pressure sensors shall be located downstream of the filters and provide signals for Pre-Low and Low Lube-Oil indication and alarms.

2.5 COOLING

Each engine shall have its own cooling system. Each system shall operate automatically while its engine is running. The cooling system coolant shall use a combination of water and ethylene-glycol sufficient for freeze protection at the minimum winter outdoor temperature specified. The maximum temperature rise of the coolant across each engine shall not exceed that recommended and submitted in paragraph SUBMITTALS.

2.5.1 Coolant Pumps

Coolant pumps shall be the centrifugal type. Each engine shall have an engine-driven primary pump. Secondary pumps shall be electric motor driven and have automatic controllers. Raw-water circulating pump shall be controlled by manual-off-automatic controllers and shall be engine driven.

2.5.2 Heat Exchanger

Each heat exchanger shall be of a size and capacity to limit the maximum allowable temperature rise in the coolant across the engine to that recommended and submitted in paragraph SUBMITTALS for the maximum summer outdoor design temperature and site elevation. Each heat exchanger shall be corrosion resistant, suitable for service in ambient conditions of application.

2.5.2.1 Fin-Tube-Type Heat Exchanger (Radiator)

Heat exchanger may be factory coated with corrosive resistant film, provided that correction measures are taken to restore the heat rejection capability of the radiator to the initial design requirement via over sizing, or other compensating methods. Internal surfaces shall be compatible with liquid fluid coolant used. Materials and coolant are subject to approval by the Contracting Officer. Heat exchangers shall be pressure type incorporating a pressure valve, vacuum valve and a cap. Caps shall be designed for pressure relief prior to removal. Each heat exchanger and the entire cooling system shall be capable of withstanding a minimum pressure of 7 psi and shall be protected with a strong grille or screen guard. Each heat exchanger shall have at least two tapped holes; one tapped hole shall be equipped with a drain cock, the rest shall be plugged. Heat exchanger shall be dual-circuit for jacket water and after cooler. Heat exchanger shall be fan cooled.

2.5.3 Thermostatic Control Valve

A modulating type, thermostatic control valve shall be provided in the coolant system to maintain the coolant temperature range submitted in paragraph SUBMITTALS.

2.5.4 Temperature Sensors

Each engine shall be equipped with coolant temperature sensors. Temperature sensors shall provide signals for pre-high and high indication and alarms.

2.6 SOUND LIMITATIONS

The limits listed are applicable only as referenced in this specification.

Frequency Band (Hz)	Maximum Acceptable Sound Level (Decibels)	
20-75	87	81
75-150	77	71
150-300	70	64
300-600	64	58
600-1,200	61	55
1,200-2,400	60	54
2,400-4,800	60	54
4,800-10 kHz	62	56

2.7 AIR INTAKE EQUIPMENT

Filters and silencers shall be provided in locations that are convenient for servicing. The silencer shall be of the high-frequency filter type, located in the air intake system as recommended by the engine manufacturer. Silencer shall be capable of reducing the noise level at the air intake to a point below the maximum acceptable levels specified in paragraph SOUND LIMITATIONS. A combined filter-silencer unit meeting requirements for the separate filter and silencer items may be provided. Expansion elements in air-intake lines shall be copper.

2.8 EXHAUST SYSTEM

The system shall be separate and complete for each engine. Piping shall be supported to minimize vibration. Where a V-type engine is provided, a V-type connector, with necessary flexible sections and hardware, shall connect the engine exhaust outlets.

2.8.1 Flexible Sections and Expansion Joints

A flexible section shall be provided at each engine and an expansion joint at each muffler. Flexible sections and expansion joints shall have flanged connections. Flexible sections shall be made of convoluted seamless tube without joints or packing. Expansion joints shall be the bellows type. Expansion and flexible elements shall be stainless steel suitable for diesel-engine exhaust gas at 1000 degrees F.Expansion and flexible elements shall be capable of absorbing vibration from the engine and compensation for thermal expansion and contraction.

2.8.2 Exhaust Muffler

A chamber type exhaust muffler shall be provided. The muffler shall be of welded steel and designed for inside mounting. Eyebolts, lugs, flanges, or other items shall be provided as necessary for support in the location and position indicated. Pressure drop through the muffler shall not exceed the recommendations of the engine manufacturer. Outside mufflers shall be zinc coated or painted with high temperature 1200 degrees resisting paint. The muffler and exhaust piping together shall reduce the noise level to less

than the maximum acceptable level listed for sound limitations in paragraph SOUND LIMITATIONS, at a distance of 75 feet from the end of the exhaust piping directly along the path of discharge for horizontal discharged exhausts; or at a radius of 75 feet from the muffler/discharge piping, at 45 degrees apart in all directions, for vertically discharged exhausts, with the engine-generator set operating at 100 percent of rated output capacity. The muffler shall have a drain valve, nipple, and cap at the low-point of the muffler.

2.8.3 Exhaust Piping

Horizontal sections of exhaust piping shall be sloped downward away from the engine to a drip leg for collection of condensate with drain valve and cap. Changes in direction shall be long radius. Exhaust piping, mufflers and silencers installed inside any building shall be insulated in accordance with Section 15080 THERMAL INSULATION FOR MECHANICAL SYSTEMS and covered to protect personnel.

2.9 PYROMETER

A pyrometer, multi-point selector switch, and individual thermocouples with calibrated leads shall be provided to show the temperature in each engine cylinder and the combined exhaust. For a supercharged engine, additional points, thermocouples and leads shall be provided to show the temperature in the turbocharger exhaust gas outlet and combustion air discharge passages. Graduated scale length shall be not less than 6 inches. The selector switch shall be double pole, with an "off" position, one set of points for each thermocouple, and suitable indicating dial. The pyrometer, thermocouples, leads and compensating devices shall be calibrated to show true exhaust temperature within plus or minus 1 percent above the highest temperature encountered at 110 percent load conditions.

2.10 EMISSIONS

The finished installation shall comply with Federal and New York State Department of Environmental Conservation (NYSDEC) regulations and restrictions regarding the limits of emissions.

2.11 STARTING SYSTEM

2.11.1 Controls

An engine start-stop switch shall be provided with functions including: test, reset, manual-run/start, manual stop, and automatic modes. Start-stop logic shall be provided for adjustable cycle cranking and cooldown operation. The logic shall be arranged for manual starting and fully automatic starting in accordance with paragraph AUTOMATIC ENGINE-GENERATOR-SET SYSTEM OPERATION. Electrical starting systems shall be provided with an adjustable cranking limit device to limit cranking periods from 8 seconds up to the maximum duration.

2.11.2 Capacity

The starting system shall be of sufficient capacity, at the maximum indoor

summer temperature specified to crank the engine without damage or overheating. The system shall be capable of providing a minimum of three cranking periods with 8 second intervals between cranks. Each cranking period shall have a maximum duration of 8 seconds.

2.11.3 Electrical

An electrical starting system shall be provided to operate on a 24-volt dc system utilizing a negative circuit ground. Starting motors shall be in accordance with SAE ARP 892.

2.11.3.1 Battery

A starting battery system shall be provided and shall include the battery, battery rack, intercell connectors, spacers, automatic battery charger with overcurrent protection, metering and relaying. The battery shall be in accordance with SAE J 537. Critical system components (rack, protection, etc.) shall be sized to withstand the seismic acceleration forces of the zone specified in paragraph Engine-Generator Parameter Schedule. The battery shall be lead-acid, with sufficient capacity, at the minimum indoor and maximum indoor temperature specified, to provide the specified cranking periods.

2.11.3.2 Battery Charger

A current-limiting battery charger, conforming to UL 1236, shall be provided and shall automatically recharge the batteries. The charger shall be capable of an equalize-charging rate for recharging fully depleted batteries within 8 hours and a floating charge rate for maintaining the batteries at fully charged condition. An ammeter shall be provided to indicate charging rate. A voltmeter shall be provided to indicate charging voltage. A timer shall be provided for the equalize-charging-rate setting.

2.11.4 Starting Aids

2.11.4.1 Jacket-Coolant Heaters

A thermostatically controlled electric heater shall be mounted in the engine coolant jacketing to automatically maintain the coolant within plus or minus 3 degrees F of the control temperature. The heater shall operate independently of engine operation so that starting times are minimized. Power for the heaters shall be 208 volts ac.

b. Standby Rated Sets

The control temperature shall be the temperature recommended by the engine manufacturer to meet the starting time specified at the minimum winter outdoor temperature.

2.11.5 Exerciser

A programmable, timing device or sequential controller shall be provided to start, operate, and automatically stop the engine-generator set to permit periodic operation for a preset period of time at preset intervals.

Intervals shall be adjustable from 720 hours to not less than 168 hours, and factory set at 720 hours. Running periods shall be adjustable from 1 to 1440 minutes, including the engine cool-down period, and factory set at 20 minutes. The design of the system exerciser shall include the following provisions:

a. Manual activation switch.

b. Manual reset switch. Reset switch shall terminate the run period and activate control logic to return system loads to the normal or preferred source, and to shut down the engine generator set after the cooldown period.

c. Coordination with the automatic transfer switch controls and logic so that the system loads are returned to the normal or preferred source upon manual reset, and upon loss of engine generator set output voltage, if the normal or preferred source is available.

2.12 SAFETY SYSTEM

Devices, wiring, remote annunciator panels, panels, etc. shall be provided and installed as a complete system to automatically activate the appropriate signals and initiate the appropriate actions. The safety system shall be provided with a self-test method to verify its operability. Alarm signals shall have manual acknowledgment and reset devices. The alarm signal systems shall reactivate for new signals after acknowledgment is given to any signal. The systems shall be configured so that loss of any monitoring device shall be dealt with as an alarm on that system element.

2.12.1 Audible Signal

The audible alarm signal shall sound at a frequency of 70 Hz at a volume of 75 dB at 10 feet. The sound shall be continuously activated upon alarm and silenced upon acknowledgment. Signal devices shall be located as shown.

2.12.2 Visual Signal

The visual alarm signal shall be a panel light. The light shall be normally off, activated to be blinking upon alarm. The light shall change to continuously lit upon acknowledgment. If automatic shutdown occurs, the display shall maintain activated status to indicate the cause of failure and shall not be reset until cause of alarm has been cleared and/or restored to normal condition. Shutdown alarms shall be red; all other alarms shall be amber.

2.12.3 Alarms and Action Logic

2.12.3.1 Shutdown

Simultaneous activation of the audible signal, activation of the visual signal, stopping the engine, and opening the generator field and main circuit breakers shall be accomplished.

2.12.3.2 Problem

Activation of the visual signal shall be accomplished.

2.12.4 Alarm Panel

The panel shall be as specified in paragraph PANELS and shall contain the following functions:

	Function/Device	Alarm/Action
a.	Red emergency stop	Shutdown (push button or switch)
b.	Day tank overfill limit indication	Problem/ (95 percent volume)(Shutdown pump supplying fuel to the day tank)
c.	Engine overspeed indication	Shutdown (110 percent of rated speed)
d.	Low lube-oil pressure indication	Shutdown (Pressure as submitted)
e.	High coolant fluid outlet temperature indication	Shutdown (Temperature as submitted)
f.	Pre-Low lube-oil pressure indication	Problem (110 percent of low lube-oil pressure)
g.	Pre-high coolant fluid temperature indication	Problem (5 degrees C lower than coolant-fluid outlet shutdown temperature)
h.	Day Tank Low Fuel Limit Indication	Problem (70% Volume Remaining).
i.	Failure to start within the specified time	Problem indication.

2.12.5 Time-Delay on Alarms

For startup of the engine-generator set, time-delay devices shall be installed bypassing the low lubricating oil pressure alarm during cranking, and the coolant-fluid outlet temperature alarm. The lube-oil time-delay device shall return its alarm to normal status after the engine starts. The coolant time-delay device shall return its alarm to normal status 5 minutes after the engine starts.

2.13 GOVERNOR

Each engine shall be provided with a governor which maintains the frequency within a bandwidth of the rated frequency, over a steady-state load range of zero to 100 percent of rated output capacity. The governor shall be configured for safe manual adjustment of the speed/frequency during

operation of the engine-generator set, without special tools, from 90 to 110 percent of the rated speed/frequency.

2.13.1 Governor Performance

2.13.1.1 Isochronous Governors

Isochronous governors shall maintain the midpoint of the frequency bandwidth at the same value for steady-state loads over the range of zero to 100 percent of rated output capacity. The governor shall be configured for safe, manual, external adjustment of the droop from zero to 10 percent.

2.13.2 Bandwidths

2.13.2.1 Electrical

Electrical governors shall have electrical speed sensing and maintain a frequency bandwidth of plus or minus 0.25 percent, maximum.

2.14 ENGINE PANEL

The panel shall be as specified in paragraph PANELS and shall contain the following items:

a. Coolant-fluid inlet temperature display.

b. Lubricating-oil pressure indicator.

c. Red emergency stop (push-button or switch).

d. Run-time meter.

e. Fuel meter display.

f. Fuel filter differential.

g. Tachometer display.

h. Engine start-stop switch.

i. Start-attempt light indicator.

j. Pyrometer display with selector switch.

k. Alarm Panel.

2.15 GENERATOR

Each generator shall be of the synchronous type, one or two bearing, conforming to NEMA MG 1, equipped with winding terminal housings in accordance with NEMA MG 1, equipped with an amortisseur winding, and directly connected to the engine. Insulation shall be Class H. Generator design shall protect against mechanical, electrical and thermal damage due to vibration, 25 percent overspeeds, or voltages and temperatures at a

rated output capacity of 110 percent for prime applications and 100 percent for standby applications. Generator ancillary equipment shall meet the short circuit requirements of NEMA MG 1. Frames shall be the drip-proof type. For two-bearing generators, the maximum voltage drop due to shaft current through the generator bearings at 100 percent output capacity shall be less than 100 mV with sealed-ball or spherical roller bearings and less than 200 mV with sleeve bearings.

2.15.1 Current Balance

At 100 percent rated output capacity, and load impedance equal for each of the 3 phases, the permissible current difference between any 2 phases shall not exceed 2 percent of the largest current on either of the 2 phases.

2.15.2 Voltage Balance

At any balanced load between 75 and 100 percent of rated output capacity, the difference in line-to-neutral voltage among the 3 phases shall not exceed 1 percent of the average line-to-neutral voltage. For a single-phase load condition, consisting of 25 percent load at unity power factor placed between any phase and neutral with no load on the other 2 phases, the maximum simultaneous difference in line-to-neutral voltage between the phases shall not exceed 3 percent of rated line to neutral voltage. The single-phase load requirement shall be valid utilizing normal exciter and regulator control. The interpretation of the 25 percent load for single phase load conditions means 25 percent of rated current at rated phase voltage and unity power factor.

2.15.3 Waveform

The deviation factor of the line-to-line voltage at zero load and at balanced rated output capacity shall not exceed 10 percent. The RMS of all harmonics shall be less than 5.0 percent and that of any one harmonic less than 3.0 percent of the fundamental at rated output capacity.

2.16 EXCITER

The generator exciter shall be of the brushless type. Semiconductor rectifiers shall have a minimum safety factor of 300 percent for peak inverse voltage and forward current ratings for all operating conditions, including 110 percent generator output at 104 degrees F ambient. The exciter and regulator in combination shall maintain generator-output voltage within the limits specified. The exciter shall maintain output current at the level and duration required to trip the generator breaker (IEEE device 52) under fault conditions.

2.17 VOLTAGE REGULATOR

Each generator shall be provided with a solid-state voltage regulator, separate from the exciter, which maintains the voltage within a bandwidth of the rated voltage, over a steady-state load range of zero to 100 percent of rated output capacity. Regulator shall be configured for safe manual adjustment of the engine-generator voltage output without special tools, during operation, from 90 to 110 percent of the rated voltage. Regulation

drift shall not exceed plus or minus 0.5 percent for an ambient temperature change of 68 degrees F.

2.17.1 Steady State Performance

The voltage regulator shall have a maximum droop of 3 percent of rated voltage over a load range from 0 to 100 percent of rated output capacity and automatically maintain the generator output voltage within the specified operational bandwidth.

2.17.2 Regulator Bandwidth

Regulators shall have an operational bandwidth of plus or minus 0.5 percent of rated voltage.

2.18 GENERATOR ISOLATION AND PROTECTION

Devices necessary for electrical protection and isolation of each engine-generator set and its ancillary equipment shall be provided. The generator circuit breaker (IEEE Device 52) ratings shall be consistent with the generator rated voltage and frequency, with continuous, short circuit withstand, and interrupting current ratings to match the generator capacity. The generator circuit breaker shall be manually operated. A set of surge capacitors, to be mounted at the generator terminals shall be provided. Monitoring and control devices shall be as specified in paragraph GENERATOR PANEL.

2.18.1 Devices

Switches, circuit breakers, switchgear, fuses, relays, and other protective devices shall be as specified in Section 16475 COORDINATED POWER SYSTEM PROTECTION.

2.19 GENERATOR PANEL

The panels shall be as specified in paragraph PANELS and shall provide controls, gauges, meters, and displays to include:

a. Frequency meter, digital type, with a range of 90 to 110 percent of rated frequency. Vibrating-reed type meters shall not be used.

b. Voltmeter, ac, digital type, 3-phase, with 4-position selector switch for the generator output.

c. Ammeter, 3-phase, with 4-position selector switch.

d. Generator field contactor or circuit breaker and discharge resistor, if provided.

e. Voltage regulator control.

f. Power metering for KW, KWH, VAP, PF, % Load.

2.20 PANELS

Each panel shall be of the type and kind necessary to provide specified functions. Panels shall be mounted on the engine-generator set base by vibration/shock absorbing type mountings. Instruments shall be mounted flush or semiflush. Convenient access to the back of panels shall be provided to facilitate maintenance. Instruments shall be calibrated using recognized industry calibration standards. Each panel shall be provided with a panel identification plate which clearly identifies the panel function. Each instrument and device on the panel shall be provided with a plate which clearly identifies the device and its function as indicated. Switch plates shall clearly identify the switch-position function.

2.20.1 Enclosures

Enclosures shall be designed for the application and environment, conforming to NEMA ICS 6. Locking mechanisms are optional.

2.20.2 Electronic

Electronic indicating instruments shall be true RMS indicating instruments, 100 percent solid state, state-of-the-art, microprocessor controlled to provide specified functions. Control, logic, and function devices shall be compatible as a system, sealed, dust and water tight, and shall utilize modular components with metal housings and digital instrumentation. An interface module shall be provided to decode serial link data from the electronic panel and translate alarm, fault and status conditions to set of relay contacts. Instrument accuracy shall be not less than 98 percent for unit mounted devices and 99 percent for control room, panel mounted devices, throughout a temperature range of minus 4 to 158 degrees F. Data display shall utilize LED or back lit LCD. Additionally, the display shall provide indication of cycle programming and diagnostic codes for troubleshooting. Numeral height shall be 0.5 inch.

2.20.3 Parameter Display

Continuous indication of the tachometer, lubricating-oil pressure, ac voltmeter, ac ammeter, frequency meter, and safety system parameters shall be provided. A momentary switch shall be specified for other panels.

2.21 AUTOMATIC ENGINE-GENERATOR-SET SYSTEM OPERATION

Fully automatic operation shall be provided for the following operations: engine-generator set starting and load transfer upon loss of normal source; retransfer upon restoration of the normal source; and stopping of engine-generator set after cool-down. Devices shall automatically reset after termination of their function.

2.21.1 Automatic Transfer Switch

Automatic transfer switches shall be in accordance with Section 16410 AUTOMATIC TRANSFER SWITCHES.

2.21.2 Monitoring and Transfer

Devices shall be provided to monitor voltage and frequency for the normal power source and each engine-generator set, and control transfer from the normal source and retransfer upon restoration of the normal source. Functions, actuation, and time delays shall be as described in Section 16410 AUTOMATIC TRANSFER SWITCHES.

2.22 BASE

The base shall be constructed of steel. The base shall be designed to rigidly support the engine-generator set, ensure permanent alignment of rotating parts, be arranged to provide easy access to allow changing of lube-oil, and ensure that alignment is maintained during shipping and normal operation. The base shall permit skidding in any direction during installation and shall withstand and mitigate the affects of synchronous vibration of the engine and generator. The base shall be provided with suitable holes for anchor bolts and jacking screws for leveling.

2.23 THERMAL INSULATION

Thermal insulation shall be as specified in Section 15080 THERMAL INSULATION FOR MECHANICAL SYSTEMS.

2.24 PAINTING AND FINISHING

The engine-generator set shall be cleaned, primed and painted in accordance with the manufacturer's standard color and practice.

2.25 FACTORY INSPECTION AND TESTS

Factory inspections and tests shall be performed on each engine-generator set. Each engine and each generator shall be tested by being operated for at least 1 hour at Service Load before being assembled into an engine-generator set. Each engine-generator set shall be run not less than 1 hour at Service Load prior to inspections. Inspections shall be completed and all necessary repairs made, prior to testing. The Contracting Officer may provide one or more representatives to witness inspections and tests.

2.25.1 Factory Inspection

Inspections shall be performed prior to beginning and after completion of testing of the assembled engine-generator set. Inspectors shall look for leaks, looseness, defects in components, proper assembly, etc. and any item found to be in need of correction shall be noted as a necessary repair. The following checklist shall be used for the inspection:

INSPECTION ITEM	GOOD	BAD	NOTES
1. Drive belts			
2. Governor and adjustments			
3. Engine timing mark			
4. Starting motor			
5. Starting aids			
6. Coolant type and concentration			

7. Radiator drains
8. Block coolant drains
9. Coolant fill level
10. All coolant line connections
11. All coolant hoses
12. Combustion air filter
13. Combustion air silencer
14. Lube oil type
15. Lube oil sump drain
16. Lube-oil filter
17. Lube-oil-level indicator
18. Lube-oil-fill level
19. All lube-oil line connections
20. All lube-oil lines
21. Fuel type and amount
22. All fuel-line connections
23. All fuel lines
24. Fuel filter
25. Coupling and shaft alignment
26. Voltage regulators
27. Battery-charger connections
28. All wiring connections
29. Instrumentation
30. Hazards to personnel
31. Base
32. Nameplates
33. Paint
34. Exhaust-heat recovery unit

2.25.2 Factory Tests

The following tests shall be performed on each engine-generator set except where the component manufacturer's production line test is noted as acceptable. On engine-generator set tests where the engine and generator are required to be connected and operated together, the load power factor shall be the power factor specified in the engine generator set parameter schedule. Tests specified as MIL-STD 705tests may be performed in accordance with the equivalent NEMA MG 1 or IEEE Std 115, or IEEE Std 112 tests. Manufacturer's standard test instruments may be substituted for test instruments specified in MIL-STD 705 tests, as approved by the Contracting Officer. In the following tests where measurements are to be recorded after stabilization of an engine-generator set parameter (voltage, frequency, current, temperature, etc.), stabilization is considered to have occurred when measurements are maintained within the specified bandwidths or tolerances, for a minimum of four consecutive readings.

a. Insulation Resistance for Stator and Exciter Test, per MIL-STD 705 method 301.1: to the performance criteria in NEMA MG 1, 22.51, minimum of 1 megohm per 1000 Volts of rated voltage for armature and field or the recommended polarization index in IEEE Std 43, whichever is more stringent. Generator manufacturer's production line test is acceptable.

b. High Potential Test, per MIL-STD 705 method 302.1: to the performance criteria in MIL-STD 705 or NEMA MG 1, 22.51 and the recommended polarization index in IEEE Std 95. Generator manufacturer's production line test is acceptable.

c. Winding Resistance Test, per IEEE Std 115. Generator manufacturer's production line test is acceptable.

d. Start-and-Stop Test. Record: the starting time; engine manufacturer's after-starting checks and inspections; readings of gauges and instruments; and the time to stop after activation of the manual emergency stop switch. The set shall operate for 5 minutes at rated voltage and frequency and no load prior to activation of the manual emergency stop switch.

e. The engine generator-set shall be operated for at least: 15 minutes at 50 percent of Service Load; 75 percent of Service Load for at least 15 minutes; 100 percent of Service Load at least 30 minutes; and 110 percent of Service Load at least 30 minutes for prime rated sets. Readings of gauges and instruments shall be checked after each load change.

f. Torsion-graphic Test, per MIL-STD 705 method 504.2: to determine that the maximum torsional stress is 5000 psi or less. The test shall be performed at a maximum frequency of 61.8 Hz. and a minimum frequency of 58.2 Hz. Alternatively the engine-generator set manufacturer may submit calculations which clearly demonstrate that the maximum torsional stress is not exceeded.

g. Overspeed Vibration Test, per MIL-STD 705 method 505.1a: to the performance criteria in NEMA MG 1, Part 22. The test shall be performed at 110 percent of rated speed for 5 minutes. The vibration shall be measured at the end bearings (front and back of engine, outboard end of generator) in the horizontal, vertical, and axial directions. Vibration amplitude and speed shall be recorded at one minute intervals.

h. Overspeed Protective Device Test, per MIL-STD 705 method 505.2a: to the performance criteria specified in paragraph SAFETY SYSTEM. The engine overspeed alarm shall be verified.

i. Phase Sequence Rotation Test, per MIL-STD 705 Method 507. Generator manufacturer's production line test is acceptable.

j. Phase Balance Voltage Test, per MIL-STD 705 method 508.1 or IEEE Std 112: to the performance criteria specified in paragraph GENERATOR.

k. Voltage Waveform (Oscillographic), per MIL-STD 705 method 601.1: to the performance criteria specified in paragraph GENERATOR.

l. Voltage Waveform (Harmonic Analysis) Test, per MIL-STD 705method 601.4: to the performance criteria specified in paragraph GENERATOR. High-speed chart recording instruments capable of

recording transient voltage and speed changes shall be used.

m. Current Balance on Stator Winding Test, by measuring the current on each phase of the winding with the generator operating at 100 percent of Service Load, with the load impedance equal for each of the three phases: to the performance criteria specified in paragraph GENERATOR. This test may be performed using any prime mover.

n. Voltage and Frequency Droop Test. Perform and record engine manufacturer's recommended prestarting checks and inspections. Start the engine, make and record engine manufacturer's after-starting checks and inspections during a reasonable warm-up period. For the following steps, verify that the output voltage and frequency return to and stabilize within the specified bandwidth values following each load change. The generator output frequency and line-line and line-neutral voltages shall be recorded following each load change.

1. With the generator operating at 0 percent load, adjust voltage and frequency to rated voltage and frequency. Record the generator output frequency and line-line and line-neutral voltages.

2. Apply and drop load equal to the Maximum Step Load Increase three times in succession.

3. Increase load to 100 percent of Service Load in steps equal to the Maximum Step Load Increase. Adjust the load, voltage and frequency to 100 percent of Service Load and rated voltage and frequency. No further adjustments may be made to any set controls after this step.

4. Reduce the load to no load in one step.

5. Increase load to 100 percent of Service Load in steps equal to the Maximum Step Load Increase. Decrease load to 0 percent of Service Load in steps of 10 percent (operate at each step until voltage and frequency stabilization is achieved).

6. Plot frequency vs. percent of rated load. Plot voltage vs. percent of rated load.

7. Calculate the percent droop for voltage and frequency with the following equations:

$$\text{Voltage droop \%} = \frac{\text{(No-Load Volts) - (Service-Load volts)}}{\text{(Service-Load Volts)}} \times 100$$

$$\text{Frequency droop \%} = \frac{\text{(No-Load Hertz) - (Service-Load hertz)}}{\text{(Service-Load hertz)}} \times 100$$

o. Frequency and Voltage Stability and Transient Response. Verify that the engine-generator set responds to addition and dropping of blocks of load in accordance with the transient response requirements. Document maximum voltage and frequency variation from bandwidth and verify that voltage and frequency return to and stabilize within the specified bandwidth, within the specified response time period. Document results with high resolution, high speed strip chart recorders and express the results as detailed in MIL-STD 705 method 608.1. Data taken shall include the following:

Ambient temperature (at 15 minute intervals).

Generator output current (before and after load changes).

Generator output voltage (before and after load changes).

Frequency (before and after load changes).

Charts of momentary overshoot and undershoot (generator terminal voltage and frequency) and recovery time for each load change together with the voltage and frequency maximum and minimum trace excursions for each steady state load condition prior to and immediately following each load change.

Charts which show the generator terminal voltage and frequency transient recovery time for each step load increase and decrease.

1. Perform and record engine manufacturer's recommended prestarting checks and inspections.

2. Start the engine, make and record engine manufacturer's after-starting checks and inspections during a reasonable warm-up period and no load. Verify stabilization of voltage and frequency within specified bandwidths.

3. With the unit at no load, apply the Maximum Step Load Increase.

4. Apply load in steps equal to the Maximum Step Load Increase until the addition of one more step increase will exceed the Service Load.

5. Decrease load to the unit such that addition of the Maximum Step Load Increase will load the unit to 100 percent of Service Load.

6. Apply the Maximum Step Load Increase.

7. Decrease load to zero percent in steps equal to the Maximum Step Load Decrease.

8. Repeat steps 3. through 7.

p. Voltage Unbalance with Unbalanced Load (Line-to-Neutral) Test in accordance with MIL-STD 705 method 620.1a: to the performance

criteria specified in paragraph GENERATOR. Prototype test data is acceptable in lieu of the actual test. This test may be performed using any prime mover.

q. For two-bearing generators, perform Shaft Current Test in accordance with MIL-STD 705 method 652.1a.

PART 3 EXECUTION

3.1 GENERAL

Installation shall provide clear space for operation and maintenance in accordance with NFPA 70 and IEEE C2. Installation of pipe, duct, conduit, and ancillary equipment shall be configured to facilitate easy removal and replacement of major components and parts of the engine-generator set.

3.2 PIPING INSTALLATION

3.2.1 General

Piping shall be welded. Connections at valves shall be flanged. Connections at equipment shall be flanged except that connections to the diesel engine may be threaded if the diesel-engine manufacturers standard connection is threaded. Except where otherwise specified, welded flanged fittings shall be utilized to allow for complete dismantling and removal of each piping system from the facility without disconnecting or removing any portion of any other system's equipment or piping. Connections to equipment shall be made with flexible connectors. Pipes extending through the roof shall be properly flashed. Piping shall be installed clear of doors and openings, to permit thermal expansion and contraction without damage to joints or hangers, and shall be installed with a 1/2 inch drain valve with cap at each low point.

3.2.2 Support

Hangers, inserts, and supports shall be of sufficient size to accommodate any insulation and shall conform to MSS SP-58 and MSS SP-69. Supports shall be spaced not more than 7 feet on center for pipes 2 inches in diameter or less, not more than 12 feet on center for pipes larger than 2 inches but smaller than 4 inches in diameter, and not more than 17 feet on center for pipes larger than 4 inches in diameter. Supports shall be provided at pipe bends or change of direction.

3.2.2.1 Ceiling and Roof

Exhaust piping shall be supported with appropriately sized Type 41 single pipe roll and threaded rods; all other piping shall be supported with appropriately sized Type 1 clevis and threaded rods.

3.2.2.2 Wall

Wall supports for pipe shall be made by suspending the pipe from appropriately sized Type 33 brackets with the appropriate ceiling and roof pipe supports.

3.2.3 Flanged Joints

Flanges shall be Class 125 type, drilled, and of the proper size and configuration to match the equipment and diesel engine connections. Flanged joints shall be gasketed and made up square and tight.

3.2.4 Pipe Sleeves

Pipes passing through construction such as ceilings, floors, or walls shall be fitted with sleeves. Each sleeve shall extend through and be securely fastened in its respective structure and shall be cut flush with each surface. The structure shall be built tightly to the sleeve. The inside diameter of each sleeve shall be minimum 1/2 inch, and where pipes pass through combustible materials 1 inch larger than the outside diameter of the passing pipe or pipe insulation/covering.

3.2.5 Cleaning

After fabrication and before assembly, piping interiors shall be manually wiped clean of debris.

3.3 ELECTRICAL INSTALLATION

Electrical installation shall comply with NFPA 70, IEEE C2, and Section 16415 ELECTRICAL WORK, INTERIOR.

3.3.1 Vibration Isolation

Flexible fittings shall be provided for conduit, cable trays, and raceways attached to engine-generator sets.

3.4 FIELD PAINTING

Field painting shall be as specified in Section 09900 PAINTING, GENERAL.

3.5 ONSITE INSPECTION AND TESTS

3.5.1 Test Conditions

3.5.1.1 Data

Measurements shall be made and recorded of all parameters necessary to verify that each set meets specified parameters. If the results of any test step are not satisfactory, adjustments, replacements, or repairs shall be made and the step repeated until satisfactory results are obtained. Unless otherwise indicated, data shall be recorded in 15 minute intervals during engine-generator set operation and shall include: readings of all engine-generator set meters and gauges for electrical and power parameters; oil pressure; ambient temperature; and engine temperatures available from meters and gauges supplied as permanent equipment on the engine-generator set.

3.5.1.2 Power Factor

For all engine-generator set operating tests the load power factor shall be the power factor specified in the engine-generator set parameter schedule.

3.5.1.3 Contractor Supplied Items

The Contractor shall provide equipment and supplies required for inspections and tests including fuel, test instruments, and loadbanks at the specified power factors.

3.5.1.4 Instruments

Readings of panel gauges, meters, displays, and instruments provided as permanent equipment shall be verified during test runs, using test instruments of greater precision and accuracy. Test instrument accuracy shall be within the following: current plus or minus 1.5 percent, voltage plus or minus 1.5 percent, real power plus or minus 1.5 percent, reactive power plus or minus 1.5 percent, power factor plus or minus 3 percent, frequency plus or minus 0.5 percent. Test instruments shall be calibrated by a recognized standards laboratory within 30 days prior to testing.

3.5.1.5 Sequence

The sequence of testing shall be as specified in the approved testing plan unless variance is authorized by the Contracting Officer. Field testing shall be performed in the presence of the Contracting Officer. Tests may be scheduled and sequenced in order to optimize run-time periods; however, the following general order of testing shall be followed: Construction Tests; Inspections; Pre-operational Tests; Safety Run Tests; and Performance Tests.

3.5.2 Construction Tests

Individual component and equipment functional tests for fuel piping, coolant piping, and lubricating-oil piping, electrical circuit continuity, insulation resistance, circuit protective devices, and equipment not provided by the engine-generator set manufacturer shall be performed prior to connection to the engine-generator set.

3.5.2.1 Piping Test

a. Lube-oil and fuel-oil piping shall be flushed with the same type of fluid intended to flow through the piping, until the outflowing fluid has no obvious sediment or emulsion.

b. Piping which is external to the engine-generator set shall be pressure tested with air pressure at 150 percent of the maximum anticipated working pressure, but not less than 150 psi, for a period of 2 hours to prove the piping has no leaks. If piping is to be insulated, the test shall be performed before the insulation is applied.

3.5.2.2 Electrical Equipment Tests

a. Insulation integrity tests shall be performed for cables connecting the generator breaker to the automatic transfer switch in accordance with Section 16375 ELECTRICAL DISTRIBUTION SYSTEM, UNDERGROUND.

b. Ground-Resistance Tests shall be performed in accordance with Section 16375 ELECTRICAL DISTRIBUTION SYSTEM, UNDERGROUND.

c. Circuit breakers shall be examined and tested in accordance with the manufacturer's published instructions for functional testing.

3.5.3 Inspections

The following inspections shall be performed jointly by the Contracting Officer and the Contractor, after complete installation of each engine-generator set and its associated equipment, and prior to startup of the engine-generator set. Checks applicable to the installation shall be performed. The results of those which are physical inspections (I) shall be documented by the Contractor and submitted in accordance with paragraph SUBMITTALS. The Contractor shall present manufacturer's data for the inspections designated (D) at the time of inspection. Inspections shall verify that equipment type, features, accessibility, installation and condition are in accordance with the contract specification. Manufacturer's statements shall certify provision of features which cannot be verified visually.

1. Drive belts.	(I)
2. Governor type and features.	(I)
3. Engine timing mark.	(I)
4. Starting motor.	(I)
5. Starting aids.	(I)
6. Coolant type and concentration.	(D)
7. Radiator drains.	(I)
8. Block coolant drains.	(I)
9. Coolant fill level.	(I)
10. Coolant line connections.	(I)
11. Coolant hoses.	(I)
12. Combustion air filter.	(I)
13. Intake air silencer.	(I)
14. Lube oil type.	(D)
15. Lube oil sump drain.	(I)
16. Lube-oil filter.	(I)
17. Lube-oil level indicator.	(I)
18. Lube-oil fill level.	(I)
19. Lube-oil line connections.	(I)
20. Lube-oil lines.	(I)
21. Fuel type.	(D)
22. Fuel-level.	(I)
23. Fuel-line connections.	(I)
24. Fuel lines.	(I)
25. Fuel filter.	(I)
26. Access for maintenance.	(I)
27. Voltage regulator.	(I)
28. Battery-charger connections.	(I)

29. Wiring & terminations. (I)
30. Instrumentation. (I)
31. Hazards to personnel. (I)
32. Base. (I)
33. Nameplates. (I)
34. Paint. (I)
35. Exhaust-heat system. (I)
36. Exhaust muffler. (I)
37. Access provided to controls. (I)
38. Enclosure is weather resistant. (I)
39. Engine & generator mounting bolts (application). (I)

3.5.4 Pre-operational Tests

3.5.4.1 Protective Relays

Protective relays shall be visually and mechanically inspected, adjusted, tested, and calibrated in accordance with the manufacturer's published instructions. Tests shall include pick-up, timing, contact action, restraint, and other aspects necessary to ensure proper calibration and operation. Relay settings shall be implemented in accordance with the installation coordination study. Relay contacts shall be manually or electrically operated to verify that the proper breakers and alarms initiate. Relaying current transformers shall be field tested in accordance with IEEE ANSI/IEEE C57.13.1.

3.5.4.2 Insulation Test

Generator and exciter circuits insulation resistance shall be tested with an insulation tester. Stator readings shall be taken at the circuit breaker. Results of insulation resistance tests shall be recorded. Readings shall be within limits specified by the manufacturer. Precautions shall be taken to preclude damaging generator components during test.

3.5.4.3 Engine-Generator Connection Coupling Test

When the generator provided is a two-bearing machine, the engine-generator connection coupling shall be inspected and checked by dial indicator to prove that no misalignment has occurred. The dial indicator shall measure variation in radial positioning and axial clearance between the coupling halves. Readings shall be taken at four points, spaced 90 degrees apart. Solid couplings and pin-type flexible couplings shall be aligned within a total indicator reading of 0.0005 to 0.001 inch for both parallel and angular misalignment. For gear-type or grid-type couplings, 0.002 inch will be acceptable.

3.5.5 Safety Run Test

a. Perform and record engine manufacturer's recommended prestarting checks and inspections.

b. Start the engine, record the starting time, make and record engine manufacturer's after-starting checks and inspections during a reasonable warm-up period.

c. Activate the manual emergency stop switch and record the time to stop.

d. Remove the high and pre-high lubricating oil temperature sensing elements from the engine and temporarily install a temperature gauge in their normal locations on the engine (required for safety, not for recorded data). Where necessary provide temporary wiring harness to connect the sensing elements to their permanent electrical leads.

e. Start the engine, record the starting time, make and record engine manufacturer's after-starting checks and inspections during a reasonable warm-up period. Operate the engine-generator set at no load until the output voltage and frequency stabilize. Monitor the temporarily installed temperature gauges. If either temperature reading exceeds the value required for an alarm condition, activate the manual emergency stop switch.

f. Immerse the elements in a vessel containing controlled-temperature hot oil and record the temperature at which the pre-high alarm activates and the temperature at which the engine shuts down. Remove the temporary temperature gauges and reinstall the temperature sensors on the engine.

g. Remove the high and pre-high coolant temperature sensing elements from the engine and temporarily install a temperature gauge in their normal locations on the engine (required for safety, not for recorded data). Where necessary provide temporary wiring harness to connect the sensing elements to their permanent electrical leads.

h. Start the engine, record the starting time, make and record engine manufacturer's after-starting checks and inspections during a reasonable warm-up period. Operate the engine generator-set at no load until the output voltage and frequency stabilize.

i. Immerse the elements in a vessel containing controlled-temperature hot oil and record the temperature at which the pre-high alarm activates and the temperature at which the engine shuts down. Remove the temporary temperature gauges and reinstall the temperature sensors on the engine.

j. Start the engine, record the starting time, make and record engine manufacturer's after-starting checks and inspections during a reasonable warm-up period.

k. Operate the engine generator-set for at least 2 hours at 75 percent of Service Load.

l. Verify proper operation and setpoints of gauges and instruments.

m. Verify proper operation of ancillary equipment.

n. Manually adjust the governor to increase engine speed past the overspeed limit. Record the RPM at which the engine shuts down.

o. Start the engine, record the starting time, make and record engine manufacturer's after-starting checks and inspections and operate the engine generator-set for at least 15 minutes at 75 percent of Service Load.

p. Manually adjust the governor to increase engine speed to within 2 percent of the overspeed trip speed previously determined and operate at that point for 5 minutes. Manually adjust the governor to the rated frequency.

q. Manually fill the day tank to a level above the overfill limit. Record the level at which the overfill alarm sounds. Verify shutdown of the fuel transfer pump. Drain the day tank down below the overfill limit.

r. Shut down the engine. Remove the time-delay low lube oil pressure alarm bypass and try to start the engine.

s. Attach a manifold to the engine oil system that contains a shutoff valve in series with a connection for the engine's oil pressure sensor followed by an oil pressure gauge ending with a bleed valve. The engine's oil pressure sensor shall be moved from the engine to the manifold and its normal location on the engine temporarily sealed. The manifold shutoff valve shall be open and bleed valve closed.

t. Start the engine, record the starting time, make and record engine manufacturer's after-starting checks and inspections and operate the engine generator-set for at least 15 minutes at 75 percent of Service Load.

u. Close the manifold shutoff valve. Slowly allow the pressure in the manifold to bleed off through the bleed valve while watching the pressure gauge. Record the pressure at which the engine shuts down. Catch oil spillage from the bleed valve in a container. Add the oil from the container back to the engine, remove the manifold, and reinstall the engine's oil pressure sensor on the engine.

v. Start the engine, record the starting time, make and record engine manufacturer's after-starting checks and inspections and operate the engine generator-set for at least 15 minutes at 100 percent of Service Load. Record the maximum sound level in each frequency band at a distance of 75 feet from the end of the exhaust piping directly along the path of discharge for horizontally discharged exhausts, or at a radius of 75 feet from the engine at 45 degrees apart in all directions for vertically discharged exhausts.

w. Manually drain off fuel slowly from the day tank to empty it to below the low fuel level limit and record the level at which the audible alarm sounds. Add fuel back to the day tank to fill it

above low level alarm limits.

x. Manually adjust the governor to speed up the engine to a level beyond the over frequency alarm setpoint and record the frequency when the audible alarm sounds. Manually adjust the governor to slow down the engine to a level below the under frequency alarm setpoint and record the frequency when the audible alarm sounds. Return the speed to the rated value. Shut down the engine-generator set.

3.5.6 Performance Tests

In the following tests, where measurements are to be recorded after stabilization of an engine-generator set parameter (voltage, frequency, current, temperature, etc.), stabilization is considered to have occurred when measurements are maintained within the specified bandwidths or tolerances, for a minimum of four consecutive readings.

3.5.6.1 Engine Load Run Test

Provide load bank for testing.

Test the engine-generator set and ancillary systems at service load to demonstrate durability; verify that heat of extended operation does not adversely affect or cause failure in any part of the system; and check all parts of the system. The engine load run test shall be accomplished principally during daylight hours, with an average ambient temperature of 65 degrees F. Data taken at 15 minute intervals shall include the following:

Electrical: Output amperes, voltage, real and reactive power, power factor, frequency.

Pressure: Lube-oil.

Temperature: Coolant.
Lube-oil.
Exhaust.
Ambient.

a. Perform and record engine manufacturer's recommended prestarting checks and inspections. Include as a minimum checking coolant fluid, fuel, and lube-oil levels.

b. Start the engine, make and record engine manufacturer's after-starting checks and inspections during a reasonable warmup period.

c. Operate the engine generator-set for 2 hours at 75 percent of Service Load.

d. For prime rated sets, increase load to 100 percent of Service Load and operate the engine generator-set for 2 hours. For standby rated sets, increase load to 100 percent of Service Load, operate

the engine generator-set for 4 hours, and skip the next two steps.

e. Decrease load to 100 percent of Service Load and operate the engine generator-set for 2 hours or until all temperatures have stabilized.

f. Remove load from the engine-generator set.

3.5.6.2 Voltage and Frequency Droop Test

For the following steps, verify that the output voltage and frequency return to and stabilize within the specified bandwidth values following each load change. Record the generator output frequency and line-line and line-neutral voltages following each load change.

a. Perform and record engine manufacturer's recommended prestarting checks and inspections. Start the engine, make and record engine manufacturer's after-starting checks and inspections during a reasonable warm-up period.

b. With the generator operating at 0 percent load, adjust voltage and frequency to rated voltage and frequency.

c. Apply and drop load equal to the Maximum Step Load Increase three times in succession.

d. Increase load to 100 percent of Service Load in steps equal to the Maximum Step Load Increase. Adjust the load, voltage and frequency to 100 percent of Service Load and rated voltage and frequency. No further adjustments may be made to any set controls after this step.

e. Reduce the load to no load in one step.

f. Increase load to 100 percent of Service Load in steps equal to the Maximum Step Load Increase. Decrease load to 0 percent of Service Load in steps of 10 percent (operate at each step until voltage and frequency stabilization is achieved).

g. Plot frequency vs. percent of rated load. Plot voltage vs. percent of rated load.

h. Calculate the percent droop for voltage and frequency with the following equations.

Voltage Droop percentage = ((No-Load Volts)-(Service-Load Volts))/(Service-Load Volts) x 100

Frequency Droop percentage = ((No-Load Hertz)-(Service-Load Hertz))/(Service-Load Hertz) x 100

3.5.6.3 Voltage Regulator Range Test

For the following steps, record the output line-line and line-neutral

voltages and frequency after performing each step instruction (after stabilization of voltage and frequency).

a. Perform and record engine manufacturer's recommended prestarting checks and inspections. Start the engine, make and record engine manufacturer's after-starting checks and inspections during a reasonable warm-up period.

b. Apply load in steps no larger than the Maximum Step Load Increase to load the engine-generator set to 100 percent of Service Load. Adjust voltage and frequency to rated voltage and frequency. No further adjustments may be made to any set control for the remainder of this test except the control panel voltage adjust device.

c. Remove all load.

d. While operating at 0 percent of Service Load, adjust the voltage regulator to 110 percent of rated voltage.

e. Increase load from 0 to 100 percent of Service Load.

f. Decrease load from 100 to 0 percent of Service Load.

g. While operating at 0 percent of Service Load, adjust the voltage regulator to the maximum attainable voltage or to a value just prior to actuation of the over-voltage protective device.

h. Increase load from 0 to 100 percent of Service Load.

i. Decrease load from 100 to 0 percent of Service Load.

j. While operating at 0 percent of Service Load, adjust the voltage regulator to 90 percent of rated voltage.

k. Increase load from 0 to 100 percent of Service Load.

l. Adjust the voltage regulator to the minimum attainable value or the value just prior to activation of the undervoltage protection device.

m. Decrease the load to 0 percent of Service Load.

n. With the data recorded while the voltage regulator setpoint was at 110 percent rated voltage, calculate the percent voltage droop with the following equation.

   Voltage Droop percentage = ((No-Load Volts)-(Service-Load Volts))/(Service-Load Volts) x 100

o. Repeat the above calculation for the data recorded for the voltage regulator setpoint of 90 percent rated voltage, and for the maximum and minimum attainable voltage levels.

3.5.6.4 Governor Adjustment Range Test

For the following steps, record the output line-line and line-neutral voltages and frequency after performing each step instruction (after stabilization of voltage and frequency). Operate for approximately two minutes at each step.

a. Perform and record engine manufacturer's recommended prestarting checks and inspections. Start the engine, make and record engine manufacturer's after-starting checks and inspections during a reasonable warm-up period.

b. Make initial adjustments to the load, voltage and frequency to obtain rated values. No further adjustments may be made to any set control for the remainder of this test except the control panel frequency adjust device.

c. While operating at rated voltage and 0 percent of Service Load, adjust the governor to 90 percent of rated frequency or just above the underfrequency trip setpoint.

d. Increase load to 100 percent of Service Load in steps equal to the maximum step load increase.

e. Decrease load from 100 to 0 percent of Service Load. Adjust the governor control to just below the engine overspeed trip setpoint.

f. Apply 100 percent of Service Load in steps equal to the maximum step load increase and operate for approximately two minutes at each step.

g. With the data recorded while the governor setpoint was at 90 percent rated frequency calculate the percent frequency regulation with the following equation.

   Frequency Droop percentage = ((No-Load Hertz)-(Service-Load Hertz))/(Service-Load Hertz) x 100

h. Repeat the above calculation using the data recorded with the governor control at just below the engine overspeed trip setpoint.

3.5.6.5 Frequency and Voltage Stability and Transient Response

Verify that the engine-generator set responds to addition and dropping of blocks of load in accordance with the transient response requirements. Document maximum voltage and frequency variation from bandwidth and verify that voltage and frequency return to and stabilize within the specified bandwidth, within the specified response time period. Document results with high resolution, high speed strip chart recorders and express the results as detailed in MIL-STD 705 method 608.1. Data taken shall include the following:

Ambient temperature (at 15 minute intervals).

Generator output current (before and after load changes).

Generator output voltage (before and after load changes).

Frequency (before and after load changes).

Charts of momentary overshoot and undershoot (generator terminal voltage and frequency) and recovery time for each load change together with the voltage and frequency maximum and minimum trace excursions for each steady state load condition prior to and immediately following each load change.

Charts which show the generator terminal voltage and frequency transient recovery time for each step load increase and decrease.

a. Perform and record engine manufacturer's recommended prestarting checks and inspections.

b. Start the engine, make and record engine manufacturer's after-starting checks and inspections during a reasonable warm-up period and no load. Verify stabilization of voltage and frequency within specified bandwidths.

c. With the unit at no load, apply the Maximum Step Load Increase.

d. Apply load in steps equal to the Maximum Step Load Increase until the addition of one more step increase will exceed the Service Load.

e. Decrease load to the unit such that addition of the Maximum Step Load Increase will load the unit to 100 percent of Service Load.

f. Apply the Maximum Step Load Increase.

g. Decrease load to zero percent in steps equal to the Maximum Step Load Decrease.

h. Repeat steps c. through g.

3.5.6.6 Automatic Operation Tests

The system shall be tested to demonstrate automatic starting, and loading of the engine-generator set. The loads for this test shall utilize the actual loads to be served. Place into operation all systems connected to the generator set (such as, but not limited to, the smoke exhaust system, fire pump, lighting, etc.) A voltage and frequency stability and transient response test shall be performed. Data taken shall include the following:

Ambient temperature (at 15 minute intervals).

Generator output current.

Generator output voltage.

Generator output frequency.

a. Initiate loss of the primary power source.

b. Verify starting of the engine generator set and function of the automatic transfer switch. Record the time to start and assume load (voltage and frequency measurements are required on the load terminals of the automatic transfer switch). Verify stabilization of voltage and frequency within specified bandwidths.

c. Restore the primary power source and monitor transfer from the alternate power source to the primary power source. Verify operation and time delay settings for the automatic transfer switch. Verify stabilization of voltage and frequency of the primary system. Verify stabilization of the engine-generator set voltage and frequency at no load.

d. Monitor the cool-down period for the engine. Record the ambient temperature, coolant temperature, and time from system transfer until engine shutdown.

e. Verify resetting of controls to normal.

3.5.7 Final Inspection

a. Remove the lube oil filter and have the oil and filter examined by the engine manufacturer for excessive metal, abrasive foreign particles, etc. Any corrective action shall be verified for effectiveness by running the engine for 8 hours at Service Load, then re-examining the oil and filter.

b. Visually inspect and check engine and generator mounting bolts for tightness and visible damage.

c. Start the engine, record the starting time, make and record all engine manufacturer's after-starting checks and inspections during a reasonable warm-up period.

d. Increase the load in steps no greater than the Maximum Step Load Increase to 100 percent of Service Load, and operate the engine-generator set for at least 30 minutes.

e. Measure the vibration at the end bearings (front and back of engine, outboard end of generator) in the horizontal, vertical, and axial directions. Verify that the vibration is within the same range as previous measurements and is within the required range.

f. Remove load and shut down the engine-generator set after the recommended cool down period.

3.5.8 Fuel Consumption Tests

Fuel consumption tests to confirm the manufacturer's certified rates shall

be performed on engine generator set and the results tabulated and averaged. Fuel consumption tests shall be conducted under the direct supervision of the engine manufacturer's representative in accordance with the procedure outlined in MIL-STD 705 test 670.1. Fuel consumption readings shall be taken at 15 minute intervals, over a minimum period of 1 hour at 50 percent Service Load, 1 hour at 75 percent Service Load, and 4 hours at 100 percent Service Load. Fuel consumption data may be taken during the 75 percent load test and 100 percent load tests. Fuel consumption readings at site conditions shall be correlated to the guarantee-baseline conditions. Test report shall contain: readings of the output frequency, voltage, current, power factor, and power; barometric pressure; ambient temperature; intake-air temperature; fuel temperature; the site fuel consumption readings, adjustment calculations, factors, and source references for correlation of actual consumption rate to the guaranteed rate.

3.5.9 Existing Generator Removal

Existing 600KW generator and housing shall be salvaged and delivered to the Government. An installed check, start-up, and load test shall be performed before removal and salvage of the generator. Tests shall be performed in precise accordance with the acceptance testing procedure outlined in NFPA 110 paragraph 5-13. The Contracting Officer shall be notified of the times and dates of the tests not less than one week before the test dates. The test results shall be recorded and shall include:

a. Fuel, lubricating oil, and antifreeze checked for conformity to the manufacturer's recommendations, under the environmental conditions present and expected.

b. Accessories that normally function while the set is standing will be checked prior to cranking the engine. To include block heaters, annunciation, etc.

c. Start-up under test mode to check for exhaust leaks, cooling air flow, movement during starting and stopping, vibration during running, normal and emergency line-to-line voltage, and phase rotation.

d. Automatic start-up by means of simulated power outage to test remote-automatic starting, transfer of the load, and automatic shutdown. Prior to this test, all transfer switch timers shall be adjusted for proper system coordination. Engine coolant temperature, oil pressure, and battery charge level along with generator voltage, amperes, and frequency shall be monitored throughout the test. An external load bank shall be connected to the system as required where sufficient building load is unavailable to load the generator to the nameplate kW rating.

3.6 FRAMED INSTRUCTIONS

Two sets of instructions shall be typed and framed under weatherproof laminated plastic, and posted side-by-side where directed before acceptance. First set of instructions shall include wiring and control

diagrams and a complete layout of the system. Second set of instructions shall include the condensed operating instructions describing manufacturer's pre-start checklist and precautions; startup procedures for test-mode, manual-start mode, and automatic-start mode (as applicable); running checks, procedures, and precautions; and shutdown procedures, checks, and precautions. Instructions shall include procedures for interrelated equipment (such as automatic transfer switches).

3.7 MANUFACTURER'S FIELD SERVICE

3.7.1 Onsite Training

The Contractor shall conduct training course for operating staff as designated by the Contracting Officer. The training period shall consist of a total 8 hours of normal working time and shall start after the system is functionally completed but prior to final acceptance. The course instructions shall cover pertinent points involved in operating, starting, stopping, servicing the equipment, as well as major elements of the operation and maintenance manuals. Additionally, the course instructions shall demonstrate routine maintenance operations such as oil change, oil filter change, air filter change, etc. Two copies of a VHS format video tape of the entire training session shall be submitted.

3.7.2 Field Engineer

The engine-generator set manufacturer or assembler shall furnish a qualified field engineer to supervise the complete installation of the engine-generator set, assist in the performance of the onsite tests, and instruct personnel as to the operational and maintenance features of the equipment.

3.8 ACCEPTANCE

Final acceptance of the engine-generator set will not be given until the contractor has successfully completed all tests and all defects in installation material or operation have been corrected.

-- End of Section --

SECTION 16265

UNINTERRUPTIBLE POWER SUPPLY (UPS) SYSTEM ABOVE 15 KVA CAPACITY

PART 1 GENERAL

1.1 REFERENCES

The publications listed below form a part of this specification to the extent referenced. The publications are referred to in the text by basic designation only.

INSTITUTE OF ELECTRICAL AND ELECTRONICS ENGINEERS (IEEE)

IEEE ANSI/IEEE C57.110	(1986; R 1993) Establishing Transformer Capability When Supplying Nonsinusoidal Load Currents
IEEE C62.41	(1991; R 1995) Surge Voltages in Low-Voltage AC Power Circuits
IEEE Std 450	(1995) Maintenance, Testing, and Replacement of Vented Lead-Acid Batteries for Stationary Applications
IEEE Std 485	(1997) Recommended Practice for Sizing Large Lead Storage Batteries for Generating Stations and Substations

NATIONAL ELECTRICAL MANUFACTURERS ASSOCIATION

NEMA PE 1	(1992) Uninterruptible Power Systems

NATIONAL FIRE PROTECTION ASSOCIATION (NFPA)

NFPA 70	(1996; Errata 96-4) National Electrical Code

1.2 SYSTEM DESCRIPTION

The UPS system shall consist of UPS module, battery system, battery protective device, static bypass transfer switch, controls and monitoring. Input ac power shall be connected to the normal source ac input of the UPS module. The battery shall be connected to the dc input of the UPS module through the battery protective device. The ac output of the UPS system shall be connected to the critical loads.

1.2.1 UPS Module and Battery System

UPS module shall contain required input isolation transformer, rectifier/charger unit, inverter unit and controls, battery protective

device, and any other specified equipment/devices. Battery system shall contain the battery cells, racks, battery disconnect, battery monitor and cabinet, if required.

1.2.2 Cabinet, Static Bypass Transfer Switch, Control and Monitoring

The UPS system shall include the system cabinet, static bypass transfer switch, system protective devices, monitoring and controls, means of isolating the system from the critical load, and remote monitoring interfaces.

1.2.3 Design Requirements

1.2.3.1 Parts and Materials

Parts and materials comprising the UPS system shall be new, of current manufacture, of a high grade and free of defects and imperfections, and shall not have been in prior service except as required during aging and factory testing.

1.2.3.2 Components

Active electronic devices shall be solid state. Semiconductor devices shall be sealed. Relays shall be dust-tight.

1.2.3.3 Semiconductor Fusing

Power semiconductors shall be fused to prevent cascaded or sequential semiconductor failures. Indicator lamp denoting blown fuse conditions shall be readily observable by the operator without removing panels or opening cabinet doors.

1.2.3.4 Interchangeability

The subassemblies in one UPS module shall be interchangeable with the corresponding modules within the same UPS, and from one UPS system to another of identical systems.

1.2.3.5 Control Power

Control power shall be derived from two sources, input and output, with automatic selective control. The control power circuit shall have suitable protection, appropriately marked and located in the immediate vicinity of the input protective device.

1.2.3.6 EMI/RFI Protection

The components and the system shall be designed to minimize the emission of electromagnetic waves that may cause interference with other equipment.

1.2.3.7 Wiring

Wiring practices, materials, and coding shall be in accordance with the requirements of NFPA 70 and other applicable standards. Wire runs shall be

protected in a manner which separates power and control wiring. Control wiring shall be minimum No. 16 AWG extra-flexible stranded copper. Logic-circuit wiring may be smaller. Ribbon cables shall be minimum No. 22 AWG. Control wiring shall have permanently attached wire numbers.

1.2.3.8 Terminations

Terminals shall be supplied for making power and control connections. Terminal blocks shall be provided for field wiring terminals. Terminal blocks shall be heavy-duty, strap-screw type. Terminal blocks for field wiring shall be located in one place in each module and in the system cabinet. Control wiring shall be extended to the terminal block location. No more than two wires shall land on any terminal point. Where control wiring is attached to the same point as power wiring, a separate terminal shall be provided. If bus duct is used, bus stubs shall be provided where bus duct enters cabinets.

1.2.3.9 Internal Assembly

The subassemblies shall be mounted in pull-out and/or swing-out trays where feasible. Cable connections to the trays shall be sufficiently long to allow easy access to all components. Where not feasible to mount subassemblies in pull-out or swing-out trays, they shall be firmly mounted inside the enclosure. Test points or logic indicators shall be labeled and located on the front edge of the control logic cards, if used.

1.2.3.10 Cabinet Structure

UPS system shall be installed in cabinets of heavy-duty structure meeting the NEMA PE 1 standards for floor mounting. UPS module cabinet shall be structurally adequate for forklift handling or lifting. Removable lifting eyes shall be provided on top of each cabinet. UPS module cabinet shall have hinged and lockable doors on the front only, with assemblies and components accessible from the front. Doors shall be key lockable. Operating controls shall be located outside the locked doors. Input, output, and battery cables shall be installed through the top or bottom of the cabinet.

1.2.3.11 Cabinet Finish

Equipment cabinet shall be cleaned, primed and painted in the manufacturer's standard colors, in accordance with accepted industry standards.

1.2.3.12 Mimic Bus

If painted, mimic bus and other front-panel markings (such as those showing circuit breakers or switches and fuses) shall be painted with durable acrylic-based paint.

1.2.3.13 Live Parts (300 Volts and Above)

Live parts (300 volts and above) that are exposed when front access doors are open shall be adequately protected or covered to minimize the chance of

accidental contact.

1.2.3.14 Drawout Assemblies

Drawout assemblies weighing 50 lbs or more shall be provided with a means of lifting, either an overhead device or a hoisting device.

1.2.3.15 Safety

UPS shall be equipped with instruction plates including warnings and cautions, suitably located, describing any special or important procedures to be followed in operating and servicing the equipment.

1.2.4 Performance Requirements

1.2.4.1 Normal Operation

The UPS module rectifier/charger shall convert the incoming ac input power to dc power for the inverter and for float charging the battery. The inverter shall supply ac power continuously. Inverter output shall be synchronized with the bypass ac power source, provided that the bypass ac power source is within the specified frequency range. The UPS system shall supply ac power to the critical loads.

1.2.4.2 Loss of ac Input Power

The battery shall supply dc power to the inverter so that there is no interruption of ac power to the critical load whenever the ac input power source deviates from the specified tolerances or fails completely. The battery shall continue to supply power to the inverter for the specified protection time. At the same time, an alarm shall sound to alert operating personnel, allowing startup of a secondary power source or orderly shutdown of the critical load.

1.2.4.3 Return of ac Input Power Source

The rectifier/charger shall start and assume the dc load from the battery when the ac input power source returns. The rectifier/charger shall then simultaneously supply the inverter with dc power and recharge the battery. This shall be an automatic function and shall cause no disturbance to the critical load.

1.2.4.4 Failure of ac Input Power to Return

Should the ac input power fail to return before the battery voltage reaches the discharge limit, the UPS system shall disconnect from the critical load to safeguard the battery.

1.2.4.5 Transfer to Bypass ac Power Source

When the static bypass switch senses an overload, inverter shutdown signal, or degradation of the inverter output, the bypass switch shall automatically transfer the critical load from the inverter output to the bypass ac power source without an interruption of power. If the bypass ac

power source is out of normal tolerance limits, the UPS and the critical load shall shut down.

1.2.4.6 Retransfer to Inverter

The static bypass switch shall be capable of automatically retransferring the load back to the inverter output after the inverter output has returned to normal conditions. Retransfer shall not occur if the two sources are not synchronized.

1.2.4.7 UPS System Maintenance

Manual closure of the maintenance bypass switch shall transfer the critical load from the inverter output to the bypass ac power source without disturbing the critical load bus. UPS module shall be capable of manual return to normal operation after completion of maintenance.

1.2.4.8 Battery Maintenance

The battery protective device shall provide the means of disconnecting the battery from the rectifier/charger and inverter for maintenance. The UPS module shall continue to function and meet the performance criteria specified except for the battery function.

1.3 SUBMITTALS

Government approval is required for submittals with a "GA" designation; submittals having an "FIO" designation are for information only. The following shall be submitted in accordance with Section 01330 SUBMITTAL PROCEDURES:

SD-01 Data

UPS System Performance Data Sheets; GA.

Pertinent performance data for the UPS system, using a copy of the data sheets supplied with this specification. Data sheets shall be certified by a responsible officer of the UPS manufacturer.

Spare Parts; FIO.

Spare parts data for each different item of material and equipment specified, not later than the date of beneficial occupancy. The data shall include a complete list of parts and supplies with current unit prices and source of supply and an itemized price breakdown of spare parts recommended for stocking. The recommended spare parts selected shall be those which, in the manufacturer's judgment, will be involved in the majority of maintenance difficulties encountered.

Lesson Plans and Training Manuals; GA.

Lesson plans and training manuals for the training phases, including type of training to be provided and proposed dates, with a list of reference materials.

SD-04 Drawings

UPS System; GA.

Detail drawings consisting of a complete list of equipment and materials, manufacturer's descriptive and technical literature, battery sizing calculations per IEEE Std 485, installation instructions, single-line diagrams, ladder-type schematic diagrams, elevations, layout drawings, and details required to demonstrate that the system has been coordinated and will function properly as a unit.

SD-09 Reports

Factory Testing; FIO. Field Supervision, Startup and Testing; FIO.

A detailed description of proposed factory test and field test procedures, including proposed dates and steps outlining each test, how it is to be performed, what it accomplishes, and its duration, not later than one month prior to the date of each test.

Factory and field test reports in booklet form tabulating factory and field tests and measurements performed, upon completion and testing of the installed system. Factory and field test reports shall be signed by an official authorized to certify on behalf of the manufacturer of the UPS system that the system meets specified requirements. The reports shall be dated after the award of this contract, shall state the Contractor's name and address, shall name the project and location, and shall list the specific requirements which are being certified.

1.4 QUALITY ASSURANCE

1.4.1 Reliability

UPS shall have a minimum acceptable system Mean Time Between Failures (MTBF) of 40,000 hours. A failure is defined as any interruption to or degradation of the UPS output. Automatic switching to bypass due to a problem with the UPS system does not constitute a failure, provided that the critical load is not disturbed.

1.4.2 Maintainability

UPS shall have a maximum acceptable system Mean Time To Repair (MTTR) of 60 minutes. Repair time is defined as the clock time from the arrival of the service technician to the time when the UPS is restored to service either by repair or substitution of the failed component.

1.5 DELIVERY AND STORAGE

Equipment placed in storage shall be protected from humidity and temperature variations, dirt, dust, or other contaminants.

1.6 PROJECT/SITE CONDITIONS

1.6.1 Environmental Conditions

The UPS and battery system shall be capable of withstanding any combination of the following external environmental conditions without mechanical or electrical damage or degradation of operating characteristics.

a. Operating altitude: Sea level to 4,000 feet.

b. Non-operating altitude: Sea level to 40,000 ft.

c. Operating ambient temperature range: 32 to 104 degrees F.

d. Non-operating and storage ambient temperature range: Minus 4 to plus 140 degrees F.

e. Operating relative humidity: 0 to 95 percent, without condensation.

1.6.2 Sound Pressure Levels

Sound pressure levels produced by the UPS, when operating under full rated load, at a distance of 5 feet in any direction from the perimeter of the unit, shall not exceed 65 dB as measured on the A scale of a standard sound level meter at slow response.

1.6.3 Verification of Dimensions

The Contractor shall become familiar with details of the work, verify dimensions in the field, and shall advise the Contracting Officer of any discrepancy before performing the work.

1.7 NAME PLATES

Each major item of equipment shall have the manufacturer's name, address, type or style, model or serial number, and catalog number on a plate secured to the item of equipment.

1.8 SPECIAL TOOLS

One set of special tools, calibration devices, and instruments required for operation, calibration, and maintenance of the equipment shall be provided.

1.9 OPERATION AND MAINTENANCE MANUALS

Six complete copies of operation manuals for the UPS System outlining the step-by-step procedures required for system startup, operation and shutdown shall be provided. The instructions shall include the manufacturer's name, equipment model number, service manual, parts list, and brief description of equipment and its basic operational features. Six complete copies of maintenance manuals listing routine maintenance procedures, possible breakdowns and repairs, and troubleshooting guides shall be provided. Corrective maintenance procedures shall identify the most probable failures and the appropriate repairs. Test measurement levels shall be referenced to specific test points on the installed equipment. Operation and

maintenance manuals may be either combined or separate.

PART 2 PRODUCTS

2.1 STANDARD PRODUCTS

Materials and equipment shall be the standard products of a manufacturer regularly engaged in the manufacture of such products and shall essentially duplicate items that have been in satisfactory use for at least 2 years prior to bid opening. Equipment shall be supported by a service organization that is, in the opinion of the Contracting Officer, reasonably convenient to the site.

2.2 LOAD PROFILE

The UPS system shall be compatible with the load characteristics defined in the LOAD PROFILE TABLE below and load configuration shown. Compensation for UPS/load interaction problems resulting from nonlinear loads or transformer and motor inrush shall be provided.

LOAD PROFILE TABLE

Type of load: Telecommunications Equipment.

Size of load: 30 KVA.

Transient characteristics: Limited to +/- 5% with recovery to 95% of nominal within 50 milliseconds and within 99% of nominal within 100 milliseconds.

Steady-state characteristics: 0.83 to 0.95 lagging power factor at full load.

2.3 UPS SYSTEM RATINGS

Unless stated otherwise, the parameters listed are under full output load at 0.8 power factor, with batteries fully charged and floating on the dc bus and with nominal input voltage.

2.3.1 System Capacity

Overall 30 kVA, 24 kW, at 40 degrees C.

2.3.2 Module Capacity

30 kVA, 24 kW.

2.3.3 Battery Capacity

Discharge time to end voltage: 15 minutes, at 77 degrees F. Battery shall be capable of delivering 125 percent of full rated UPS load at initial start-up.

2.3.4 Static Switch

100 amperes, 22,000 amperes symmetrical interrupting capacity.

2.3.5 System Bus Bracing

Braced for 22,000 amperes symmetrical interrupting capacity.

2.3.6 ac Input

a. Voltage 480 volts line-to-line.

b. Number of phases: 3-phase, 3-wire, plus ground.

c. Voltage Range: Plus 10 percent, minus 15 percent, without affecting battery float voltage or output voltage.

d. Frequency: 60 Hz, plus or minus 5 percent.

e. Power walk-in: 20 percent to 100 percent over 15 to 24 seconds.

f. Total harmonic current distortion (THD) reflected into the primary line: 10 percent maximum.

g. Transformer sub-cycle inrush: 4 to 8 times full load rating.

2.3.7 ac Output

a. Voltage 208 volts line-to-line, 120 volts line-to-neutral.

b. Number of phases: 3-phase, 4-wire, plus ground.

c. Voltage regulation:

(1) Balanced load: Plus or minus 1.0 percent.

(2) 50 percent load imbalance, phase-to-phase: Plus or minus 2 percent.

(3) No-load voltage modulation: Plus or minus 1 percent.

(4) Voltage drift: Plus or minus 1 percent over any 30 day interval (or length of test) at stated ambient conditions.

d. Voltage adjustment: Plus or minus 5 percent manually.

e. Frequency: 60 Hz.

f. Frequency regulation: Plus or minus 0.1 percent.

g. Frequency drift: Plus or minus 0.1 percent over any 24 hour interval (or length of test) at stated ambient conditions when on internal oscillator.

h. Harmonic content (RMS voltage): 3 percent single harmonic,

maximum; 5 percent total maximum with linear load. Voltage THD shall be less than 7 percent with up to 50 percent nonlinear load and a crest factor of less than 3 to 1.

i. Load power factor operating range: 1.0 to 0.8 lagging.

j. Phase displacement:

(1) Balanced load: Plus or minus 1 degree of bypass input.

(2) 50 percent load imbalance phase-to-phase: Plus or minus 3 degrees of bypass input.

k. Wave-form deviation factor: 5 percent at no load.

l. Overload capability (at full voltage) (excluding battery):

(1) 125 percent load for 10 minutes.

(2) 150 percent load for 30 seconds.

(3) 300 percent load for one cycle after which it shall be current limited to 150 percent until fault is cleared or UPS goes to bypass.

2.3.8 Transient Response

2.3.8.1 Voltage Transients

a. 50 percent load step/0 percent to 50 percent load: Plus or minus 8 percent.

b. 50 percent load step/50 percent to 100 percent load: Plus or minus 8 percent.

c. Loss or return of ac input: Plus or minus 1 percent.

d. Automatic transfer of load from UPS to bypass: Plus or minus 4 percent.

e. Manual retransfer of load from bypass to UPS: Plus or minus 4 percent.

f. Response time: Recovery to 99 percent steady-state condition within 50 milliseconds after any of the above transients.

2.3.8.2 Frequency

a. Transients: Plus or minus 0.5 Hz maximum.

b. Slew Rate: 1.0 Hz maximum per second.

2.3.9 Efficiency

a. Minimum Single-Module Efficiency: 80 percent at full load kW.

2.4 UPS MODULE

2.4.1 General Description

UPS module shall consist of a rectifier/charger unit and a 3-phase inverter unit with their associated transformers, synchronizing equipment, protective devices and accessories as required for operation.

2.4.2 Rectifier/Charger Unit

Rectifier/charger unit shall be solid state and shall provide direct current to the dc bus.

2.4.2.1 Input Protective Device

Rectifier/charger unit shall be provided with an input protective device. The protective device shall be sized to accept simultaneously the full-rated load and the battery recharge current. The protective device shall be capable of shunt tripping and shall have 22,000 amperes symmetrical interrupting capacity. The protective device shall have provision for locking in the "off" position. A surge suppression device shall be installed at the UPS input to protect against lightning and switching surges.

2.4.2.2 Power Transformer

A dry-type, isolated-winding power transformer shall be used for the rectifier unit. The transformer's hottest spot winding temperature shall not exceed the temperature limit of the transformer insulation material when operating at full load. The transformer insulation shall be Class H, 150 degrees C rise. Transformer connections shall be accessible from the front.

2.4.2.3 Power Walk-In

Rectifier/charger unit shall be protected by a power walk-in feature such that when ac power is returned to the ac input bus, the total initial power requirement will not exceed 20 percent of the rated full load current. This demand shall increase gradually to 100 percent of the rated full load current plus the battery charging current over the specified time interval.

2.4.2.4 Sizing

Rectifier/charger unit shall be sized for the following two simultaneous operating conditions:

a. Supplying the full rated load current to the inverter.

b. Recharging a fully-discharged battery to 95 percent of rated ampere-hour capacity within ten times the discharge time after normal ac power is restored, with the input protective device closed.

2.4.2.5 Battery Charging Current

a. Primary current limiting: Battery-charging current shall be voltage regulated and current limited. The battery-charging current limit shall be separately adjustable from 2 percent to 25 percent of the maximum discharge current. After the battery is recharged, the rectifier/charger unit shall maintain the battery at full float charge until the next operation under input power failure. Battery charger shall be capable of providing equalizing charge to the battery.

b. Second step current limiting: The rectifier/charger unit shall also have a second-step battery current limit. This second-step current limit shall sense actual battery current and reduce the input power demand for battery recharging to 50 percent (adjustable from 30 percent to 70 percent) of the normal rate without affecting the system's ability to supply full-rated power to the connected load. The second-step current-limit circuit shall be activated by a dry contact signal from the generator set controls and shall prevent normal rate battery recharging until utility power is restored.

2.4.2.6 Output Filter

Rectifier/charger unit shall have an output filter to minimize ripple current supplied to the battery; the ripple current into the battery shall not exceed 3 percent RMS.

2.4.2.7 dc Voltage Adjustment

Rectifier/charger unit shall have manual means for adjusting dc voltage for battery equalization, to provide voltage within plus 10 percent of nominal float voltage.

2.4.2.8 Battery Isolation Protective Device

Module shall have a dc protective device to isolate the module from the battery system. The protective device size and interrupting rating shall be as required by system capacity and shall incorporate a shunt trip as required by circuit design. The protective device shall have provision for locking in the "off" position.

2.4.3 Inverter Unit

Inverter unit shall be a solid-state device capable of accepting power from the dc bus and providing ac power within specified limits.

2.4.3.1 Output Overload

The inverter shall be able to sustain an overload as specified across its output terminals. The inverter shall not shut off, but shall continue to operate within rated parameters, with inverse-time overload shutdown protection.

2.4.3.2 Synchronism

The inverter shall normally operate in phase-lock and synchronism with the bypass source. Should the bypass source frequency deviate beyond 60 Hz by more than 0.5 Hz, the internal frequency oscillators contained in the power module shall be used to derive the new frequency reference. Upon restoration of the bypass source within the required tolerance, the inverter shall resynchronize with that source at a slew rate not exceeding the specified rate. The oscillator shall be temperature compensated and shall be manually adjustable. The design of the oscillator and synchronizing circuits shall be such that failure of any associated component, connector pin, terminal lead wire or dc power source in either the open or shorted mode shall affect only one inverter leg. Such failure shall not cause transient disturbance of the critical load in excess of the stated limits.

2.4.3.3 Phase Balance

Electronic controls shall be incorporated to provide individual phase voltage compensation to obtain phase balance.

2.4.3.4 Modular Construction

Each control logic printed circuit board shall be electrically and physically packaged on an individual plug-in module with separate indication and adjustments.

2.4.3.5 Output Protective Device

The output protective device shall be capable of shunt tripping and shall have interrupting capacity as specified. Protective device shall have provision for locking in the "off" position.

2.4.3.6 Output Transformer

The inverter output transformer shall be similar to the input transformer and shall be capable of handling up to K-13 nonlinear loads as described in IEEE ANSI/IEEE C57.110.

2.4.4 External Protection

UPS module shall have built-in self-protection against undervoltage, overvoltage, overcurrent and surges introduced on the ac input source and/or the bypass source. The UPS system shall sustain input surges without damage in accordance with IEEE C62.41. The UPS shall also have built-in self-protection against overvoltage and voltage surges introduced at the output terminals by paralleled sources, load switching, or circuit breaker operation in the critical load distribution system.

2.4.5 Internal Protection

UPS module shall be self-protected against overcurrent, sudden changes in output load and short circuits at the output terminals. UPS module shall

be provided with output reverse power detection which shall cause that module to be disconnected from the critical load bus when output reverse power is present. UPS module shall have built-in protection against permanent damage to itself and the connected load for predictable types of failure within itself and the connected load. At the end of battery discharge limit, the module shall shut down without damage to internal components.

2.5 STATIC BYPASS TRANSFER SWITCH

A static bypass transfer switch shall be provided as an integral part of the UPS and shall consist of a static switch and a bypass protective device or bypass switch. The control logic shall contain an automatic transfer circuit that senses the status of the inverter logic signals and alarm conditions and provides an uninterrupted transfer of the load to the bypass ac power source, without exceeding the transient limits specified herein, when a malfunction occurs in the UPS or when an external overload condition occurs. The power section of the static bypass transfer switch shall be provided as a plug-in type assembly to facilitate maintenance. The static bypass transfer switch shall be used to connect the bypass ac power source or the UPS inverter output to the critical load when required, and shall have the following features:

2.5.1 Uninterrupted Transfer

The static bypass transfer switch shall automatically cause the bypass ac power source to assume the critical load without interruption when the bypass control logic senses one of the following conditions and the UPS inverter output is synchronized to the bypass ac power source:

a. Inverter overload exceeds unit's rating.

b. Battery protection period is expired and bypass is available.

c. Inverter failure.

2.5.2 Interrupted Transfer

If an overload occurs and the UPS inverter output is not synchronized to the bypass ac power source, the UPS inverter output shall current-limit for 200 milliseconds minimum. The inverter shall then turn off and an interrupted transfer to the bypass ac power source shall be made. If the bypass ac power source is beyond the conditions stated below, an interrupted transfer shall be made upon detection of a fault condition:

a. Bypass voltage greater than plus or minus 10 percent from the UPS rated output voltage.

b. Bypass frequency greater than plus or minus 0.5 Hz from the UPS rated output frequency.

c. Phase differential of ac bypass voltage to UPS output voltage greater than plus or minus 3 degrees.

2.5.3 Manual Transfer

It shall be possible to make a manually-initiated static transfer from the system status and control panel by turning the UPS inverter off.

2.5.4 Automatic Uninterrupted Forward Transfer

The static bypass transfer switch shall automatically forward transfer, without interruption after the UPS inverter is turned "on", or after an instantaneous overload-induced reverse transfer has occurred and the load current has returned to less than the unit's 100 percent rating.

2.5.5 Forced Transfer

The control logic circuitry shall provide the means of making a forced or reverse transfer of the static bypass transfer switch on an interrupted basis. Minimum interruption shall be 200 milliseconds when the UPS inverter is not synchronized to the bypass ac power source.

2.5.6 Overload Ratings

The static bypass transfer switch shall withstand the following overload conditions:

a. 2000 percent of UPS output rating for two cycles.

b. 200 percent of UPS output rating for 5 minutes.

c. 125 percent of UPS output rating for 10 minutes.

2.5.7 Static Switch Disconnect

A static switch disconnect shall be incorporated to isolate the static bypass transfer switch assembly so it can be removed for servicing. The switch shall be equipped with auxiliary contacts and provision for padlocking in either the "on" or "off" position.

2.6 MAINTENANCE BYPASS SWITCH

2.6.1 General

A maintenance bypass switch shall be provided as an integral part of the UPS and located within the UPS module. The maintenance bypass switch shall provide the capability to continuously support the critical load from the bypass ac power source while the UPS is isolated for maintenance. The maintenance bypass switch shall be housed in an isolated compartment inside the UPS cabinet in such a way that service personnel will not be exposed to electrically live parts while maintaining the unit. Switch shall contain a maintenance bypass protective device and a module isolation protective device.

2.6.2 Load Transfer

The maintenance bypass switch shall provide the capability of transferring

the critical load from the UPS static bypass transfer switch to maintenance bypass and then back to the UPS static bypass transfer switch with no interruption to the critical load.

2.7 MODULE CONTROL PANEL

The UPS module shall be provided with a control/indicator panel. The panel shall be on the front of the UPS module. Controls, meters, alarms and indicators for operation of the UPS module shall be on this panel.

2.7.1 Module Meters

2.7.1.1 Monitored Functions

The following functions shall be monitored and displayed:

a. Input voltage, phase-to-phase (all three phases).

b. Input current, all three phases.

c. Input frequency.

d. Battery voltage.

e. Battery current (charge/discharge).

f. Output voltage, phase-to-phase and phase-to-neutral (all three phases).

g. Output current, all three phases.

h. Output frequency.

i. Output kilowatts.

j. Elapsed time meter to indicate hours of operation, 6 digits.

k. Bypass voltage, phase-to-phase and phase-to-neutral (all three phases).

l. Output kilovars.

m. Output kilowatt hours, with 15-minute demand attachment.

2.7.1.2 Meter Construction

Meters shall have 1 percent accuracy and shall be digital type (minimum 4 significant digits).

2.7.2 Module Controls

Module shall have the following controls:

a. Lamp test/reset pushbutton.

b. Alarm test/reset pushbutton.

c. Module input protective device trip pushbutton, with guard.

d. Module output protective device trip pushbutton, with guard.

e. Battery protective device trip pushbutton, with guard.

f. Emergency off pushbutton, with guard.

g. dc voltage adjustment potentiometer, with locking guard.

h. Control power off switch.

i. UPS/bypass transfer selector switch.

j. Static bypass transfer switch enable/disable selector switch.

2.7.3 Module Alarm Indicators

Module shall have indicators for the following alarm items. Any one of these conditions shall turn on an audible alarm and the appropriate summary indicator. Each new alarm shall register without affecting any previous alarm.

a. Input ac power source failure.

b. Input protective device open.

c. Output protective device open.

d. Overload.

e. Overload shutdown.

f. dc overvoltage.

g. dc ground fault.

h. Low battery.

i. Battery discharged.

j. Battery protective device open.

k. Blower failure.

l. Input transformer overtemperature.

m. Inverter transformer overtemperature.

n. Equipment overtemperature.

o. Operating on internal oscillator.

p. Fuse blown.

q. Control power failure.

r. Charger off.

s. Inverter off.

t. Emergency off.

u. UPS on battery.

v. Critical load on static bypass.

w. Static bypass transfer switch disabled.

x. Inverter output overvoltage.

y. Inverter output undervoltage.

z. Inverter output overfrequency.

aa. Inverter output underfrequency.

bb. Bypass source overvoltage.

cc. Bypass source undervoltage.

dd. Bypass source overfrequency.

ee. Bypass source underfrequency.

ff. Bypass source to inverter out of synchronization.

2.7.4 Module Mimic Panel

UPS module shall have a mimic panel in the format of a module single-line diagram, with status indicators for input, output, battery protective devices, and battery disconnect switch. Each protective device shall have indicators for open (green) and closed (red), to give positive indication. The mimic panel shall provide indication of the following additional functions:

a. Charger on (functional).

b. UPS on-line (inverter furnishing load power).

c. UPS on-bypass (static switch operating).

d. System alarm (flashes for abnormalities, minor or major faults).

2.7.5 Module Emergency Off Button

Pressing the emergency off button shall cause the affected module to be disconnected from the system, via its input protective device, output protective device, and battery protective device. Activation of this button shall not affect the operation of the remainder of the system.

2.8 SELF-DIAGNOSTIC CIRCUITS

The control logic shall include status indicators for trouble-shooting the control circuits. These indicators shall be mounted on the circuit card edge or face such that they will be visible without repositioning the card, and shall be labeled with the function name.

2.9 COMMUNICATIONS AND DATA ACQUISITION PORT

An RS 485 communications and data acquisition port shall be provided. This port shall allow the system parameters, status, alarm indication and control panel functions specified to be remotely monitored and controlled.

2.10 TEMPERATURE CONTROL

2.10.1 General

Cabinet and enclosure ventilation shall be adequate to ensure that components are operated within their ratings. Forced-air cooled rectifier, inverter, and control unit will be acceptable. The cooling fans shall continue operation if UPS input power is lost. Redundancy shall be provided so that failure of one fan or associated circuit breaker will not cause an overheat condition. Cooling air shall enter the lower front of the cabinets and exhaust at the top. Blower power failure shall be indicated as a visual and audible alarm on the control panel. Air inlets shall have filters that can be replaced without opening the cabinet doors.

2.10.2 Blower Power Source

Blower power source shall be internally derived from the input and output sides of UPS module, with automatic transfer arrangement.

2.10.3 Temperature Sensors

Temperature sensors shall be provided to monitor the air temperature. Separate sensors shall monitor the temperature of rectifier and inverter heat sinks. Separate sensors shall also monitor the transformer temperature. Critical equipment overtemperature indication shall start a timer that shall shut down the UPS system if the temperature does not return below the setpoint level in 60 minutes.

2.11 BATTERY SYSTEM

2.11.1 General

A storage battery with sufficient ampere-hour rating to maintain UPS output at full capacity for the specified duration shall be provided for each UPS module. The battery shall be of heavy-duty, industrial design suitable for

UPS service. The cells shall be provided with flame arrestor vents, intercell connectors and cables, cell-lifting straps, cell-numbering sets, and terminal grease. Intercell connectors shall be sized to maintain terminal voltage within voltage window limits when supplying full load under power failure conditions. Cell and connector hardware shall be stainless steel of a type capable of resisting corrosion from the electrolyte used.

2.11.2 Battery Ratings

a. Type: lead calcium.

b. Specific gravity when fully charged: 1.215.

c. End voltage 1.67 volts per cell.

d. Float voltage: 2.17 to 2.26 volts per cell.

e. Equalizing voltage: 2.33 to 2.38 volts per cell.

2.11.3 Battery Construction

The battery shall be of the valve-regulated, sealed, non-gassing, recombinant type.

2.11.4 Battery Cabinet

The battery pack assembly shall be furnished in a battery cabinet matching the UPS cabinet. The battery cabinet shall be designed to allow for checking the torque on the connections in the battery system and to provide adequate access for annual housekeeping chores. External wiring interface shall be through the bottom or top of the assembly. A smoke and high temperature alarm shall annunciate detection of either smoke or high temperature within the battery cabinet.

2.11.5 Cell-Terminal Covers

Acid-resistant transparent cell-terminal covers not exceeding 6 feet in length and with vent holes drilled on top where needed shall be provided.

2.11.6 Battery Disconnect

Each battery pack assembly shall have a fused disconnect switch provided in a NEMA 1 enclosure, finished with acid-resistant paint and located in line with the assembly. Switch shall be complete with line side and load side bus bars for connection to battery cells. Switch shall be rated 600 V dc, 200 amperes, 3-pole with interrupting rating as required by system capacity, and shall have an external operator that is lockable in the "off" position.

2.11.7 Seismic Requirements

The battery support system shall conform to Section 13080 SEISMIC PROTECTION FOR MISCELLANEOUS EQUIPMENT.

2.11.8 Battery Monitor

A battery monitor shall be provided for each battery pack assembly. At a minimum, this device shall monitor the following parameters:

a. Total system voltage.

b. Ambient room temperature.

c. Total battery discharge cycles with a duration of 30 seconds or less.

The monitor shall also record the total accumulated discharge minutes and accumulated battery system discharge kW hours.

2.12 FACTORY TESTING

The UPS system shall be factory tested to meet the requirements specified using a test battery (not the battery to be supplied with the system). UPS module shall be factory load tested as an independent assembly with 3-phase ac input power and with battery power for a minimum of 8 hours, with meter readings taken every 30 minutes. Load shall be balanced at rated kVA and rated power factor. Factory tests for the UPS module shall be run under full load, and will be witnessed by the Government. Should a malfunction occur, the problem shall be corrected and the test shall be repeated. As a minimum, the factory tests shall include the parameters described in paragraphs ac Input, ac Output, Transient Response and Efficiency. The tests shall encompass all aspects of operation, such as module failure, static bypass operation, battery failure, input power failure and overload ratings. The Government shall be notified in writing at least 2 weeks before testing. Factory-test time shall not be used for system debugging and/or checkout. Such work shall be done prior to notifying the Government that the system is ready for testing. Factory tests shall be performed during normal business hours. The system shall be interconnected and tested for an additional 8 hours to ensure proper wiring and performance.

2.12.1 Transient Tests

Transient tests shall be conducted using high-speed oscillograph type recorders to demonstrate the operation of the components to the satisfaction of the Government. These tests shall include 50 percent to 100 percent load changes, manual transfer, manual retransfer, low dc bus initiated transfer and low ac output bus transfer. A recording instrument equipped with an event marker shall be used.

2.12.2 Efficiency Tests

Testing for efficiency shall be performed at zero output up to 100 percent of stated kVA output in 25 percent steps, 0.8 power factor, with battery fully charged and floating on the dc bus, with nominal input voltage, and with modules connected to the system to represent actual operating conditions.

2.13 INSPECTION

Inspection before shipment is required. The manufacturer shall notify the Government at least 2 weeks before shipping date so that an inspection can be made.

PART 3 EXECUTION

3.1 INSTALLATION

The UPS system shall be set in place, wired and connected in accordance with the approved shop drawings and manufacturer's instructions. The UPS battery shall be shipped to the site dry.

3.2 FIELD SUPERVISION, STARTUP AND TESTING

The services of a manufacturer's representative who is experienced in the installation, adjustment, and operation of the equipment specified shall be provided. The representative shall supervise the installation, adjustment and testing of the equipment. The representative shall check the wiring between equipment, start up the system, and field test the functions, interlocks and protective devices to ensure that the total system is functioning according to the intent of the design. The field tests shall be performed under the supervision of a factory-trained representative of the equipment manufacturer and witnessed by the Government. The Government shall be given 2 weeks written advance notice of the date and time when testing will be conducted.

3.2.1 Field Tests

As a minimum, the startup and field test procedures shall include the following:

a. Ensure that shipping members have been removed.

b. Check for damage (dents, scratches, frame misalignment, damage to panel devices, etc).

c. Ensure that interiors are free of foreign materials, tools and dirt.

d. Attach a phase rotation meter to the UPS input, output and bypass buses, and observe proper phase sequences.

e. Torque test bus connections at shipping splits. Also torque test battery connections.

f. Check each electrical bus for proper phasing and identification.

g. Check and test selector switches and meters for proper operation.

h. Check doors for proper alignment and operation.

i. Check and test each protective device for proper mechanical and

electrical operation.

j. Check protective device overcurrent trip settings.

k. Check and test indicating lights for proper operation and color.

l. Perform onsite field test procedures.

m. Demonstrate to the Government that the specified functions and interlocks have been implemented.

n. Provide IEEE Std 450 battery installation certification.

o. Check key interlock key numbers, if used, to ensure agreement with interlocking scheme.

3.3 POSTING FRAMED DATA AND INSTRUCTIONS

Framed data and instructions containing wiring and control diagrams under glass or in laminated plastic shall be posted where directed. Condensed operating instructions, prepared in typed form, shall be framed as specified above and posted beside the diagrams. The framed instructions shall be posted before acceptance testing of the system.

3.4 FIELD TRAINING

A field training course shall be provided for designated operating and maintenance staff members. Training shall be provided for a total period of 12 hours of normal working time and shall start after the system is functionally complete but prior to final acceptance test. Field training shall cover the items contained in the operating and maintenance manuals. The 12 hours shall be divided into two sessions of 6 hours each. Each session shall be conducted on a different day.

-- End of Section --

SECTION 16370

ELECTRICAL DISTRIBUTION SYSTEM, AERIAL

PART 1 GENERAL

1.1 REFERENCES

The publications listed below form a part of this specification to the extent referenced. The publications are referred to in the text by basic designation only.

AMERICAN NATIONAL STANDARDS INSTITUTE (ANSI)

ANSI C29.1	(1988; R 1996) Electrical Power Insulators - Test Methods
ANSI C29.2	(1992) Insulators - Wet-Process Porcelain and Toughened Glass - Suspension Type
ANSI C29.4	(1989; R 1995) Wet-Process Porcelain Insulators - Strain Type
ANSI C29.5	(1984; R 1995) Wet-Process Porcelain Insulators - Low- and Medium-Voltage Types
ANSI C29.6	(1996) Wet-Process Porcelain Insulators - High-Voltage Pin Type
ANSI C29.8	(1985; R 1995) Wet-Process Porcelain Insulators - Apparatus, Cap and Pin Type
ANSI C29.9	(1983; R 1996) Wet-Process Porcelain Insulators - Apparatus, Post-Type
ANSI C135.1	(1979) Galvanized Steel Bolts and Nuts for Overhead Line Construction
ANSI C135.2	(1987) Threaded Zinc-Coated Ferrous Strand-Eye Anchor Rods and Nuts for Overhead Line Construction
ANSI C135.4	(1987) Zinc-Coated Ferrous Eyebolts and Nuts for Overhead Line Construction
ANSI C135.14	(1979) Staples with Rolled or Slash Points for Overhead Line Construction
ANSI C135.22	(1988) Zinc-Coated Ferrous Pole-Top Insulator Pins with Lead Threads for Overhead Line Construction

ANSI O5.1	(1992) Specifications and Dimensions for Wood Poles

AMERICAN SOCIETY FOR TESTING AND MATERIALS (ASTM)

ASTM A 123	(1989a) Zinc (Hot-Dip Galvanized) Coatings on Iron and Steel Products
ASTM A 153	(1996) Zinc Coating (Hot-Dip) on Iron and Steel Hardware
ASTM A 475	(1995) Zinc-Coated Steel Wire Strand
ASTM A 575	(1989) Steel Bars, Carbon, Merchant Quality, M-Grades
ASTM A 576	(1990b; R 1995) Steel Bars, Carbon, Hot-Wrought, Special Quality
ASTM B 1	(1995) Hard-Drawn Copper Wire
ASTM B 8	(1995) Concentric-Lay-Stranded Copper Conductors, Hard, Medium-Hard, or Soft
ASTM B 117	(1997) Operating Salt Spray (FOG) Apparatus
ASTM D 1654	(1992) Evaluation of Painted or Coated Specimens Subjected to Corrosive Environment

AMERICAN WOOD-PRESERVERS' ASSOCIATION (AWPA)

AWPA C4	(1995) Poles - Preservative Treatment by Pressure Processes
AWPA C25	(1995) Sawn Crossarms - Preservative Treatment by Pressure Processes
AWPA P1/P13	(1995) Standard for Coal Tar Creosote for Land and Fresh Water and Marine (Coastal Water Use)
AWPA P5	(1996) Standards for Waterborne Preservatives
AWPA P8	(1995) Standards for Oil-Borne Preservatives
AWPA P9	(1992) Standards for Solvents and Formulations for Organic Preservative Systems

INSTITUTE OF ELECTRICAL AND ELECTRONIC ENGINEERS (IEEE)

IEEE C2	(1997) National Electrical Safety Code
IEEE ANSI/IEEE C57.19.00	(1991; R 1997) IEEE Standard General Requirements and Test Procedures for Outdoor Power Apparatus Bushings
IEEE ANSI/IEEE C57.19.01	(1991; R 1997) IEEE Standard Performance Characteristics and Dimensions for Outdoor Apparatus Bushings
IEEE Std 81	(1983) Guide for Measuring Earth Resistivity, Ground Impedance, and Earth Surface Potentials of a Ground System (Part 1)
IEEE Std 100	(1996) IEEE Standard Dictionary of Electrical and Electronics Terms
IEEE Std 404	(1993) Cable Joints for Use with Extruded Dielectric Cable Rated 5000 V Through 138 000 V and Cable Joints for Use with Laminated Dielectric Cable Rated 2500 V Through 500 000 V

NATIONAL ELECTRICAL MANUFACTURERS ASSOCIATION (NEMA)

NEMA HV 2	(1991) Application Guide for Ceramic Suspension Insulators
NEMA WC 7	(1991; Rev 1) Cross-Linked-Thermosetting-Polyethylene-Insulated Wire and Cable for the Transmission and Distribution of Electrical Energy
NEMA WC 8	(1991; Rev 1) Ethylene-Propylene-Rubber-Insulated Wire and Cable for the Transmission and Distribution of Electrical Energy

NATIONAL FIRE PROTECTION ASSOCIATION (NFPA)

NFPA 70	(1999) National Electrical Code

UNDERWRITERS LABORATORIES (UL)

UL 467	(1993; Rev thru Aug 1996) Grounding and Bonding Equipmen

1.2 GENERAL REQUIREMENTS

1.2.1 Terminology

Terminology used in this specification is as defined in IEEE Std 100.

1.2.2 Service Conditions

Items provided under this section shall be specifically suitable for the following service conditions.

a. Altitude 151

b. Ambient Temperature 90 degrees F.

c. Frequency 60 HZ

d. Seismic Zone 2A

1.3 SUBMITTALS

Government approval is required for submittals with a "GA" designation; submittals having an "FIO" designation are for information only. The following shall be submitted in accordance with Section 01330 SUBMITTAL PROCEDURES:

SD-01 Data

Manufacturer's Catalog; GA.

Catalog cuts, brochures, circulars, specifications, product data, and printed information in sufficient detail and scope to verify compliance with the requirements of the contract documents.

Material, Equipment, and Fixture Lists; FIO.

A complete itemized listing of equipment and materials proposed for incorporation into the work. Each entry shall include the item number, the quantity of items proposed, and the name of the manufacturer of the item.

Installation Procedures; FIO.

As a minimum, installation procedures for regulators, transformers and reclosers. Procedures shall include diagrams, instructions, and precautions required to install, adjust, calibrate, and test the devices and equipment.

SD-04 Drawings

Electrical Distribution System; GA.

Detail drawings consisting of equipment drawings, illustrations, schedules, instructions, diagrams and other information necessary to define the installation and enable the Government to check conformity with the requirements of the contract drawings. Detail drawings shall as a minimum include:

a. Poles.

b. Crossarms.

c. Conductors.

d. Insulators.

e. Surge arresters.

If departures from the contract drawings are deemed necessary by the Contractor, complete details of such departures shall be submitted with the detail drawings. Approved departures shall be made at no additional cost to the Government.

Detail drawings shall show how components are assembled, function together and how they will be installed on the project. Data and drawings for component parts of an item or system shall be coordinated and submitted as a unit. Data and drawings shall be coordinated and included in a single submission. Multiple submissions for the same equipment or system are not acceptable except where prior approval has been obtained from the Contracting Officer. In such cases, a list of data to be submitted later shall be included with the first submission. Detail drawings shall consist of the following:

a. Detail drawings showing physical arrangement, construction details, connections, finishes, materials used in fabrication, provisions for conduit or busway entrance, access requirements for installation and maintenance, physical size, electrical characteristics, foundation and support details, and equipment weight. Drawings shall be drawn to scale and/or dimensioned. Optional items shall be clearly identified as included or excluded.

b. Internal wiring diagrams of equipment showing wiring as actually provided for this project. External wiring connections shall be clearly identified.

As-Built Drawings; FIO.

The as-built drawings shall be a record of the construction as installed. The drawings shall include the information shown on the contract drawings as well as deviations, modifications, and changes from the contract drawings, however minor. The as-built drawings shall be kept at the job site and updated daily. The as-built drawings shall be a full sized set of prints marked to reflect deviations, modifications, and changes. The as-built drawings shall be complete and show the location, dimensions, part identification, and other information. Additional sheets may be added. The as-built drawings shall be jointly inspected for accuracy and completeness by the Contractor's quality control representative and by the Contracting Officer prior to the submission of each monthly pay estimate. Upon completion of the work, the Contractor shall submit three full sized sets of the marked prints to the Contracting Officer for approval. If upon review, the as-built drawings are found to contain errors and/or omissions, they will be returned to the Contractor for correction. The Contractor

shall correct and return the as-built drawings to the Contracting Officer for approval within ten calendar days from the time the drawings are returned to the Contractor.

SD-09 Reports

Factory Test; FIO.

Certified factory test reports shall be submitted when the manufacturer performs routine factory tests, including tests required by standards listed in paragraph REFERENCES. Results of factory tests performed shall be certified by the manufacturer, or an approved testing laboratory, and submitted within 7 days following successful completion of the tests specified in applicable publications or in these specifications.

Field Testing; FIO.

A proposed field test plan 20 days prior to testing the installed system. No field test shall be performed until the test plan is approved. The test plan shall consist of complete field test procedures including tests to be performed, test equipment required, and tolerance limits.

Test Reports; GA.

Six copies of the information described below in 8-1/2 by 11 inch binders having a minimum of 5 rings, and including a separate section for each test. Sections shall be separated by heavy plastic dividers with tabs.

a. A list of equipment used, with calibration certifications.

b. A copy of measurements taken.

c. The dates of testing.

d. The equipment and values to be verified.

e. The condition specified for the test.

f. The test results, signed and dated.

g. A description of adjustments made.

SD-13 Certificates

Materials and Equipment; FIO.

Where materials or equipment are specified to conform to the standards of the Underwriters Laboratories (UL) or to be constructed or tested, or both, in accordance with the standards of the American National Standards Institute (ANSI), the Institute of Electrical and Electronic Engineers (IEEE), or the National Electrical Manufacturers Association (NEMA), the Contractor shall submit proof that the items provided under this section of the specifications conform to such requirements. The label of, or listing by, UL will be acceptable as evidence that the items conform thereto.

Either a certification or a published catalog specification data statement, to the effect that the item is in accordance with the referenced ANSI or IEEE standard, will be acceptable as evidence that the item conforms thereto. A similar certification or published catalog specification data statement to the effect that the item is in accordance with the referenced NEMA standard, by a company listed as a member company of NEMA, will be acceptable as evidence that the item conforms thereto. In lieu of such certification or published data, the Contractor may submit a certificate from a recognized testing agency equipped and competent to perform such services, stating that the items have been tested and that they conform to the requirements listed, including methods of testing of the specified agencies.

1.4 DELIVERY, STORAGE, AND HANDLING

Devices and equipment shall be visually inspected by the Contractor when received and prior to acceptance from conveyance. Stored items shall be protected from the environment in accordance with the manufacturer's published instructions. Damaged items shall be replaced. Wood poles held in storage for more than 2 weeks shall be stored in accordance with ANSI O5.1. Handling of wood poles shall be in accordance with ANSI O5.1, except that pointed tools capable of producing indentations more than inch in depth shall not be used.

PART 2 PRODUCTS

2.1 GENERAL REQUIREMENTS

Products shall conform to the following requirements. Items of the same classification shall be identical including equipment, assemblies, parts, and components.

2.2 STANDARD PRODUCT

Material and equipment shall be the standard product of a manufacturer regularly engaged in the manufacture of the product and shall essentially duplicate items that have been in satisfactory use for at least 2 years prior to bid opening.

2.3 NAMEPLATES

2.3.1 General

Each major component shall have the manufacturer's name, address, type or style, model or serial number, and catalog number on a nameplate securely attached to the equipment.

2.4 CORROSION PROTECTION

2.4.1 Aluminum Materials

Aluminum shall not be used.

2.4.2 Ferrous Metal Materials

2.4.2.1 Hardware

Ferrous metal hardware shall be hot-dip galvanized in accordance with ASTM A 153 and ASTM A 123.

2.4.2.2 Equipment

Equipment and component items, shall be provided with corrosion-resistant finishes which shall withstand 120 hours of exposure to the salt spray test specified in ASTM B 117 without loss of paint or release of adhesion of the paint primer coat to the metal surface in excess of 1/16 inch from the test mark. The described test mark and test evaluation shall be in accordance with ASTM D 1654 with a rating of not less than 7 in accordance with TABLE 1, (procedure A). Cut edges or otherwise damaged surfaces of hot-dip galvanized sheet steel or mill galvanized sheet steel shall be coated with a zinc rich paint conforming to the manufacturer's standard.

2.4.3 Finishing

Painting required for surfaces not otherwise specified and finish painting of items only primed at the factory shall be as specified in Section 09900 PAINTING, GENERAL.

2.5 CONDUCTORS, CONNECTORS, AND SPLICES

2.5.1 Copper Conductors

Hard-drawn-copper conductors shall comply with ASTM B 1 and ASTM B 8 as appropriate for the conductor size.

2.5.2 Connectors and Splices

Connectors and splices shall be of copper alloys for copper conductors.

2.6 MEDIUM-VOLTAGE LINES

2.6.1 Insulated Medium-Voltage Lines

Insulated medium-voltage line conductors shall be of the factory-assembled, messenger-supported type, having a rated circuit voltage of 15 kV, and a 133 percent insulation level. Conductor material shall be copper. Insulation shall be ethylene-propylene-rubber (EPR) conforming to NEMA WC 8. Messengers shall be zinc-coated steel, aluminum-clad-steel, copper-clad-steel, or composite-copper and copper-clad steel.

2.7 POLES AND HARDWARE

2.7.1 Wood Poles

Wood poles shall comply with ANSI O5.1, and shall be pressure treated in accordance with AWPA C4, with creosote conforming to AWPA P1/P13or with oil-borne preservatives and petroleum conforming to AWPA P8 and AWPA P9, respectively, and waterborne preservatives conforming to AWPA P5.

Waterborne preservatives shall be either chromated or ammoniacal copper arsenate. Any species listed in ANSI O5.1 for which a preservative treatment is not specified in AWPA C4, shall not be used; northern white cedar, if treated as specified for western red cedar, and western fir, if treated as specified for Douglas fir, may be used. Wood poles shall have pole markings located approximately 10 feet from pole butts for poles 50 feet or less in length, and 14 feet from the pole butts for poles longer than 55 feet in length. Poles shall be machine trimmed by turning smooth full length, and shall be roofed, gained, and bored prior to pressure treatment. Where poles are not provided with factory-cut gains, metal gain plates shall be provided.

2.7.2 Pole Line Hardware

Zinc-coated hardware shall comply with ANSI C135.1, ANSI C135.2, ANSI C135.4, ANSI C135.14 ANSI C135.22. Steel hardware shall comply with ASTM A 575 and ASTM A 576. Hardware shall be hot-dip galvanized in accordance with ASTM A 153. Pole-line hardware shall be hot-dip galvanized steel. Washers shall be installed under boltheads and nuts on wood surfaces and elsewhere as required. Washers used on through-bolts and double-arming bolts shall be approximately 2-1/4 inches square and 3/16 inch thick. The diameter of holes in washers shall be the correct standard size for the bolt on which a washer is used. Washers for use under heads of carriage-bolts shall be of the proper size to fit over square shanks of bolts. Eye bolts, bolt eyes, eyenuts, strain-load plates, lag screws, guy clamps, fasteners, hooks, shims, and clevises shall be used wherever required to support and to protect poles, brackets, crossarms, guy wires, and insulators.

2.7.3 Armless Construction

Pole mounting brackets for line-post or pin insulators and eye bolts for suspension insulators shall be as shown. Brackets shall be attached to poles with a minimum of two bolts. Brackets may be either provided integrally as part of an insulator or attached to an insulator with a suitable stud. Bracket mounting surface shall be suitable for the shape of the pole. Brackets for wood poles shall have wood gripping members. Horizontal offset brackets shall have a 5-degree uplift angle. Pole top brackets shall conform to ANSI C135.22, except for modifications necessary to provide support for a line-post insulator. Brackets shall provide a strength exceeding that of the required insulator strength, but in no case less than a 2800 pound cantilever strength.

2.7.4 Guy Assemblies

Guy assemblies shall be zinc-coated steel in accordance with ASTM A 475. Guy assemblies, including insulators and attachments, shall provide a strength exceeding the required guy strength. Three-eye thimbles shall be provided on anchor rods to permit attachment of individual primary, secondary, and communication down guys. Anchors shall provide adequate strength to support all loads. Guy strand shall be 7 strand. Guy material shall be Class A zinc-coated-steel utilities, with a minimum breaking strength not less than 6000 pounds pounds, except where two or more guys are used to provide the required strength. Guy rods shall be not less than 8 feet in length by 3/4 inch in diameter.

2.8 INSULATORS

Insulators shall comply with NEMA HV 2 for general requirements. Suspension insulators shall be used at corners, angles, dead-ends, other areas where line insulators do not provide adequate strength, and as indicated. Mechanical strength of suspension insulators and hardware shall exceed the rated breaking strength of the attached conductors.

2.8.1 Medium-Voltage Line Insulators

Medium-voltage line insulators shall comply with ANSI C29.2, ANSI C29.5, and ANSI C29.6, and as applicable. Ratings shall not be lower than the ANSI classes indicated in TABLE I. Horizontal line-post insulators shall be used for armless construction and shall have the same mechanical and electrical ratings as vertical line-post insulators for the ANSI class indicated, but shall be modified to be suitable for horizontal installation. Where line-post insulators are used for angles greater than 15 degrees, clamp-top fittings shall be provided as well as for other locations shown. Conductor clamps for use with clamp-top, line-post insulators shall be hot-dip galvanized malleable iron for copper conductors. Either line-post or pin insulators may be used for crossarm construction. Pin insulators for use on voltages in excess of 6 kV phase-to-phase shall be radio-interference-freed or else line-post insulators shall be used.

TABLE I

MINIMUM ANSI RATING OF MEDIUM-VOLTAGE INSULATORS BY CLASS

Voltage Level	Line-Post	Pin	Suspension
6 kV to 15 kV	57-1 or 11	55-5	Two 52-2
	57-2 or 12	56-3	Two 52-3 or 4

2.8.2 Strain Insulators for Guy Wires

Strain insulators for use in insulated guy assemblies shall comply with ANSI C29.4 for porcelain or equivalent fiberglass, and shall have a mechanical strength exceeding the rated breaking strength of the attached guy wire. Insulators shall be not smaller than Class 54-2 for lines of 6 kV to 15 kV.

2.8.3 Apparatus Insulators

Apparatus insulators shall comply with IEEE ANSI/IEEE C57.19.00, IEEE ANSI/IEEE C57.19.01, ANSI C29.8, and ANSI C29.9 as applicable.

2.9 CROSSARM ASSEMBLIES

2.9.1 Crossarms

Crossarms shall comply with RUS REA Bulletin 1728H-701 and shall be solid wood, distribution type, except cross-sectional area with pressure

treatment conforming to AWPA C25, and a 1/4 inch, 45 degree chamfer on all top edges. Cross-sectional area minimum dimensions shall be 4-1/4 inches in height by 3-l/4 inches in depth in accordance with IEEE C2 for Grade B construction. Crossarms shall be 8 feet in length. Crossarms shall be machined, chamfered, trimmed, and bored for stud and bolt holes before pressure treatment. Factory drilling shall be provided for pole and brace mounting, for four pin or four vertical line-post insulators, and for four suspension insulators, except where otherwise indicated or required. Drilling shall provide required climbing space and wire clearances. Crossarms shall be straight and free of twists to within 1/10 inch per foot of length. Bend or twist shall be in one direction only.

2.10 FACTORY TESTS

Factory tests shall be performed, as follows, in accordance with the applicable publications and with other requirements of these specifications. The Contracting Officer shall be notified at least 10 days before the equipment is ready for testing.

a. Electric Power Insulators: Manufacturer's standard tests in accordance with ANSI C29.1.

PART 3 EXECUTION

3.1 GENERAL INSTALLATION REQUIREMENTS

Equipment and devices shall be installed and energized in accordance with the manufacturer's published instructions. Circuits installed in conduits or underground and splices and terminations for medium-voltage cable shall conform to the requirements of Section 16375 ELECTRICAL DISTRIBUTION SYSTEM, UNDERGROUND.

3.1.1 Conformance to Codes

The installation shall comply with the requirements and recommendations of IEEE C2 for heavy loading districts, Grade B construction. No reduction in clearance shall be made. The installation shall also comply with the applicable parts of NFPA 70.

3.1.2 Verification of Dimensions

The Contractor shall become familiar with details of the work, shall verify dimensions in the field, and shall notify the Contracting Officer of any discrepancy before performing any work.

3.2 POLE INSTALLATION

Poles for overhead electric lines shall be wood poles utilizing crossarm construction.

3.2.1 Wood Pole Setting

Wood Pole Setting: Wood poles shall be set straight and firm. In normal firm ground, minimum pole-setting depths shall be as listed in Table II.

In rocky or swampy ground, pole-setting depths shall be decreased or increased respectively in accordance with the local utility's published standards and as approved. In swampy or soft ground, a bog shoe shall be used where support for a pole is required. Poles in straight runs shall be in a straight line. Curved poles shall be placed with curvatures in the direction of the pole line. Poles shall be set to maintain as even a grade as practicable. When the average ground run is level, consecutive poles shall not vary more than 5 feet in height. When the ground is uneven, poles differing in length shall be kept to a minimum by locating poles to avoid the highest and lowest ground points. If it becomes necessary to shorten a pole, a piece shall be sawed off the top end and roofed. If any pole is shortened after treatment, the shortened end of the pole shall be given an application of hot preservative. Where poles are set on hilly terrain, along edges of cuts or embankments, or where soil may be washed out, special precautions shall be taken to ensure durable pole foundations, and the setting depth shall be measured from the lower side of the pole. Holes shall be dug large enough to permit proper use of tampers to the full depth of a hole. Earth shall be placed into the hole in 6 inch maximum layers, then thoroughly tamped before the next layer is placed. Surplus earth shall be placed around each pole in a conical shape and packed tightly to drain water away from poles.

TABLE II

MINIMUM POLE-SETTING DEPTH (FEET)

Length Overall Feet	Straight Lines	Curves, Corners, and Points of Extra Strain
20	5.0	5.0
25	5.5	5.5
30	5.5	5.5
35	6.0	6.0
40	6.5	6.5
45	6.5	7.0
50	7.0	7.5
55	7.5	8.0
60	8.0	8.5
65	8.5	9.0
70	9.0	9.5
75	9.5	10.0
80	10.0	10.5
85	10.5	11.0
90	11.0	11.5
95	11.5	12.0
100	12.5	12.5

3.3 CROSSARM MOUNTING

Crossarms shall be bolted to poles with 5/8 inchthrough-bolts with square washers at each end. Bolts shall extend not less than 1/8 inch nor more than 2 inches beyond nuts. On single crossarm construction, the bolt head

shall be installed on the crossarm side of the pole. Wood crossarm braces shall be provided on crossarms. Flat braces may be provided for 8 foot crossarms and shall be 1/4 by 1-1/4 inches, not less than 28 inches in length. Flat braces shall be bolted to arms with 3/8 inch carriage bolts with round or square washers between boltheads and crossarms, and secured to poles with 1/2 by 4 inch lag screws after crossarms are leveled and aligned. Angle braces are required for 10 foot crossarms and shall be 60 inch span by 18 inch drop formed in one piece from 1-1/2 by 1-1/2 by 3/16 inch angle. Angle braces shall be bolted to crossarms with 1/2 inch bolts with round or square washers between boltheads and crossarms, and secured to poles with 5/8 inch through-bolts. Double crossarms shall be securely held in position by means of 5/8 inch double-arming bolts. Each double-arming bolt shall be equipped with four nuts and four square washers.

3.3.1 Line Arms and Buck Arms

Line arms and buck arms shall be set at right angles to lines for straight runs and for angles 45 degrees and greater; and line arms shall bisect angles of turns of less than 45 degrees. Dead-end assemblies shall be used for turns where shown. Buckarms shall be installed, as shown, at corners and junction poles. Double crossarms shall be provided at ends of joint use or conflict sections, at dead-ends, and at angles and corners to provide adequate vertical and longitudinal strength. Double crossarms shall be provided at each line-crossing structure and where lines not attached to the same pole cross each other.

3.4 GUY INSTALLATION

Guys shall be provided, with loads and strengths as indicated, and wherever conductor tensions are not balanced, such as at angles, corners, and dead-ends. Where a single guy will not provide the required strength, two or more guys shall be provided. Where guys are wrapped around poles, at least two guy hooks shall be provided and pole shims shall be provided where guy tension exceeds 6000 pounds. Guy clamps 6 inches in length with three 5/8 inch bolts, or offset-type guy clamps, or approved guy grips shall be provided at each guy terminal. Guy-strain insulators shall be provided in each guy for wood poles. Multiple-helix screw anchors shall be provided in marshy ground; rock anchors shall be installed in rock at right angles to guys, elsewhere anchors shall be of an expanding type, except that power installed screw anchors of equivalent holding power are acceptable. A half-round yellow polyvinyl, fiberglass, or other suitable plastic guy marker, not less than 8 feet in length, shall be provided at the anchor end of each guy shown, securely clamped to the guy or anchor at the bottom and top of the marker. Holding capacities for down guys shall be based on a lead angle of 45 degrees.

3.5 CONDUCTOR INSTALLATION

3.5.1 Line Conductors

Unless otherwise indicated, conductors shall be insulated and installed in accordance with manufacturer's approved tables of sags and tensions. Proper care shall be taken in handling and stringing conductors to avoid abrasions, sharp bends, cuts, kinks, or any possibility of damage to

insulation or conductors. Conductors shall be paid out with the free end of conductors fixed and cable reels portable, except where terrain or obstructions make this method unfeasible. Bend radius for insulated conductors shall not be less than the applicable NEMA specification recommendation. Conductors shall not be drawn over rough or rocky ground, nor around sharp bends. When installed by machine power, conductors shall be drawn from a mounted reel through stringing sheaves in straight lines clear of obstructions. Initial sag and tension shall be checked by the Contractor, in accordance with the manufacturer's approved sag and tension charts, within an elapsed time after installation as recommended by the manufacturer.

3.5.2 Connectors and Splices

Connectors and splices shall be mechanically and electrically secure under tension and shall be of the nonbolted compression type. The tensile strength of any splice shall be not less than the rated breaking strength of the conductor. Splice materials, sleeves, fittings, and connectors shall be noncorrosive and shall not adversely affect conductors. Primary line apparatus taps shall be by means of hot line clamps attached to compression type bail clamps (stirrups). Low-voltage connectors for copper conductors shall be of the solderless pressure type. Noninsulated connectors shall be smoothly taped to provide a waterproof insulation equivalent to the original insulation, when installed on insulated conductors.

3.5.3 Conductor-To-Insulator Attachments

Conductors shall be attached to insulators by means of clamps, shoes or tie wires, in accordance with the type of insulator. For insulators requiring conductor tie-wire attachments, tie-wire sizes shall be as indicated in TABLE II.

TABLE II

TIE-WIRE REQUIREMENTS

CONDUCTOR Copper (AWG)	TIE WIRE Soft-Drawn Copper (AWG)
4/0 and larger	2

3.5.4 Medium-Voltage Insulated Cables

Medium-voltage cable messengers shall be attached to poles with clamps providing a strength exceeding the required messenger strength and with not less than 5/8 inch through-bolts. Messengers shall be dead-ended, grounded, and storm and line-guyed at corners and dead-ends, and at intervals not exceeding 1000 feet along straight runs.

3.6 CONNECTIONS BETWEEN AERIAL AND UNDERGROUND SYSTEMS

Connections between aerial and underground systems shall be made as shown. Underground cables shall be extended up poles in guards to cable

terminations. Conduits shall be secured to poles by conduit supports spaced not more than 10 feet apart and with one support not more than 12 inches from any bend or termination. Cables shall be supported by devices separate from the conduit or guard, near their point of exit from the riser conduit or guard. Cables guards shall be secured in accordance with the manufacturers published procedure. Risers shall be equipped with bushings to protect cables. Capnut potheads shall be used to terminate medium-voltage multiple-conductor cable.

3.7 GROUNDING

Noncurrent-carrying metal parts of equipment and conductor assemblies, such as medium-voltage cable terminations and messengers, operating mechanisms of pole top switches, and other noncurrent-carrying metal items shall be grounded. Additional grounding of equipment, neutral, and surge arrester grounding systems shall be installed at poles where indicated.

3.7.1 Grounding Electrodes

Grounding electrodes shall be installed as follows:

a. Driven rod electrodes - Unless otherwise indicated, ground rods shall be located approximately 3 feet out from base of the pole and shall be driven into the earth until the tops of the rods are approximately 1 foot below finished grade. Multiple rods shall be evenly spaced at least 10 feet apart and connected together 2 feet below grade with a minimum No. 6 bare copper conductor.

b. Plate electrodes - Plate electrodes shall be installed in accordance with the manufacturer's instructions and IEEE C2 and NFPA 70.

c. Ground Resistance - The maximum resistance of a driven ground rod or plate electrode shall not exceed 25 ohms under normally dry conditions. Whenever the required ground resistance is not met, provide additional electrodes, to achieve the specified ground resistance. The additional electrodes will be up to three, 10 feet rods spaced a minimum of 10 feet apart. In high ground resistance, UL listed chemically charged ground rods may be used. If the resultant resistance exceeds 25 ohms measured not less than 48 hours after rainfall, the Contracting Officer shall be notifies immediately. Connections below grade shall be fusion welded. Connections above grade shall be fusion welded or shall use UL 467 approved connectors.

3.7.2 Grounding and Bonding Connections

Connections above grade shall be made by the fusion-welding process or with bolted solderless connectors in compliance with UL 467, and those below grade shall be made by a fusion-welding process. Where grounding conductors are connected to aluminum-composition conductors, specially treated or lined copper-to-aluminum connectors suitable for this purpose shall be used.

3.8 FIELD TESTING

3.8.1 General

Field testing shall be performed in the presence of the Contracting Officer. The Contractor shall notify the Contracting Officer 7 days prior to conducting tests. The Contractor shall furnish materials, labor, and equipment necessary to conduct field tests. The Contractor shall perform tests and inspections recommended by the manufacturer unless specifically waived by the Contracting Officer. The Contractor shall maintain a written record of tests which includes date, test performed, personnel involved, devices tested, serial number and name of test equipment, and test results. Field reports will be signed and dated by the Contractor.

3.8.2 Safety

The Contractor shall provide and use safety devices such as rubber gloves, protective barriers, and danger signs to protect and warn personnel in the test vicinity. The Contractor shall replace any devices or equipment which are damaged due to improper test procedures or handling.

3.8.3 Ground-Resistance Tests

The resistance of each pole ground shall be measured using the fall-of-potential method defined in IEEE Std 81. Ground resistance measurements shall be made before the electrical distribution system is energized and shall be made in normally dry conditions not less than 48 hours after the last rainfall. Resistance measurements of separate grounding electrode systems shall be made before the systems are bonded together below grade. The combined resistance of separate systems may be used to meet the required resistance, but the specified number of electrodes shall be provided.

3.8.4 Medium-Voltage Preassembled Cable Test

After installation, prior to connection to an existing system, and before the operating test, the medium-voltage preassembled cable system shall be given a high potential test. Direct-current voltage shall be applied on each phase conductor of the system by connecting conductors at one terminal and connecting grounds or metallic shieldings or sheaths of the cable at the other terminal for each test. Prior to the test, the cables shall be isolated by opening applicable protective devices and disconnecting equipment. The method, voltage, length of time, and other characteristics of the test for initial installation shall be in accordance with NEMA WC 7 or NEMA WC 8 for the particular type of cable installed, and shall not exceed the recommendations of IEEE Std 404 for cable joints unless the cable and accessory manufacturers indicate higher voltages are acceptable for testing. Should any cable fail due to a weakness of conductor insulation or due to defects or injuries incidental to the installation or because of improper installation of cable, cable joints, terminations, or other connections, the Contractor shall make necessary repairs or replace cables as directed. Repaired or replaced cables shall be retested.

3.8.5 Sag and Tension Test

The Contracting Officer shall be given prior notice of the time schedule for stringing conductors or cables serving overhead medium-voltage circuits and reserves the right to witness the procedures used for ascertaining that initial stringing sags and tensions are in compliance with requirements for the applicable loading district and cable weight.

3.9 MANUFACTURER'S FIELD SERVICE

3.9.1 Onsite Training

The Contractor shall conduct a training course for the operating staff as designated by the Contracting Officer. The training period shall consist of a total of 16 hours of normal working time and shall start after the system is functionally completed but prior to final acceptance tests. The course instruction shall cover pertinent points involved in operating, starting, stopping, servicing the equipment, as well as all major elements of the operation and maintenance manuals. Additionally, the course instructions shall demonstrate all routine maintenance operations. A VHS format video tape of the entire training session shall be submitted.

3.9.2 Installation Engineer

After delivery of the equipment, the Contractor shall furnish one or more field engineers, regularly employed by the equipment manufacturer to supervise the installation of the equipment, assist in the performance of the onsite tests, initial operation, and instruct personnel as to the operational and maintenance features of the equipment.

3.10 ACCEPTANCE

Final acceptance of the facility will not be given until the Contractor has successfully completed all tests and after all defects in installation, material or operation have been corrected.

-- End of Section --

SECTION 16375

ELECTRICAL DISTRIBUTION SYSTEM, UNDERGROUND

PART 1 GENERAL

1.1 REFERENCES

The publications listed below form a part of this specification to the extent referenced. The publications are referred to in the text by basic designation only.

AMERICAN NATIONAL STANDARDS INSTITUTE (ANSI)

ANSI C29.1	(1988; R 1996) Electrical Power Insulators - Test Methods
ANSI C80.1	(1995) Rigid Steel Conduit - Zinc Coated
ANSI C119.1	(1986) Sealed Insulated Underground Connector Systems Rated 600 Volts

AMERICAN SOCIETY FOR TESTING AND MATERIALS (ASTM)

ASTM A 48	(1994a) Gray Iron Castings
ASTM A 123	(1989a) Zinc (Hot-Dip Galvanized) Coatings on Iron and Steel Products
ASTM A 153	(1996) Zinc Coating (Hot-Dip) on Iron and Steel Hardware
ASTM B 3	(1995) Soft or Annealed Copper Wire
ASTM B 8	(1993) Concentric-Lay-Stranded Copper Conductors, Hard, Medium-Hard, or Soft
ASTM B 117	(1997) Operating Salt Spray (FOG) Apparatus
ASTM B 496	(1992) Compact Round Concentric-Lay-Stranded Copper Conductors
ASTM C 478	(1996) Precast Reinforced Concrete Manhole Sections
ASTM C 478M	(1996) Precast Reinforced Concrete Mahhole Sections (Metric)
ASTM D 1654	(1992) Evaluation of Painted or Coated Specimens Subjected to Corrosive Environments

ASSOCIATION OF EDISON ILLUMINATING COMPANIES (AEIC)

AEIC CS5	(1994) Cross-linked Polyethylene Insulated Shielded Power Cables Rated 5 Through 46 kV
AEIC CS6	(1996) Ethylene Propylene Rubber Insulated Shielded Power Cables Rated 5 Through 69 kV

FACTORY MUTUAL ENGINEERING AND RESEARCH (FM)

FM P7825a	(1998) Approval Guide Electrical Equipment

INSTITUTE OF ELECTRICAL AND ELECTRONICS ENGINEERS (IEEE)

IEEE C2	(1997 National Electrical Safety Code
IEEE ANSI/IEEE C37.34	(1994) Test Code for High-Voltage Air Switches
IEEE ANSI/IEEE C37.41	(1994; C37.41e) Design Tests for High-Voltage Fuses, Distribution Enclosed Single-Pole Air Switches, Fuse Disconnecting Switches, and Accessories
IEEE ANSI/IEEE C57.12.00	(1993) IEEE Standard General Requirements for Liquid-Immersed Distribution, Power, and Regulating Transformers
IEEE ANSI/IEEE C57.13	(1993) Instrument Transformers
IEEE ANSI/IEEE C57.98	(1993) Guide for Transformer Impulse Tests
IEEE Std 48	(1996) Standard Test Procedures and Requirements for Alternating-Current Cable Terminations 2.5 kV through 765 kV
IEEE Std 81	(1983) Guide for Measuring Earth Resistivity, Ground Impedance, and Earth Surface Potentials of a Ground System (Part 1)
IEEE Std 100	(1996) IEEE Standard Dictionary of Electrical and Electronics Terms
IEEE Std 386	(1995) Separable Insulated Connector Systems for Power Distribution Systems Above 600V
IEEE Std 404	(1993) Cable Joints for Use with Extruded Dielectric Cable Rated 5000 V through 138 000 V and Cable Joints for Use with Laminated Dielectric Cable Rated 2500 V Through 500 000 V

IEEE Std 592	(1990; R 1996) Exposed Semiconducting Shields on Premolded High Voltage Cable Joints and Separable Insulated Connectors

NATIONAL ELECTRICAL MANUFACTURERS ASSOCIATION (NEMA)

NEMA FB 1	(1993) Fittings, Cast Metal Boxes and Conduit Bodies for Conduit and Cable Assemblies
NEMA TC 6	(1990) PVC and ABS Plastic Utilities Duct for Underground Installation
NEMA WC 7	(1991; Rev 1) Cross-Linked-Thermosetting-Polyethylene-Insulated Wire and Cable for the Transmission and Distribution of Electrical Energy
NEMA WC 8	(1991; Rev 1; Rev 2) Ethylene-Propylene-Rubber-Insulated Wire and Cable for the Transmission and Distribution of Electrical Energy

NATIONAL FIRE PROTECTION ASSOCIATION (NFPA)

NFPA 70	(1999) National Electrical Code

UNDERWRITERS LABORATORIES (UL)

UL 6	(1997) Rigid Metal Conduit
UL 467	(1993; Rev thru Aug 1996) Grounding and Bonding Equipment
UL 486A	(1997) Wire Connectors and Soldering Lugs for Use with Copper Conductors
UL 486B	(1997; Rev Jun 1997) Wire Connectors for Use with Aluminum Conductors
UL 510	(1994; Rev thru Nov 1997) Polyvinyl Chloride, Polyethylene and Rubber Insulating Tape
UL 514A	(1996) Metallic Outlet Boxes
UL 651	(1995; Rev thru Apr 1997) Schedule 40 and 80 Rigid PVC Conduit
UL 1072	(1995; Rev Mar 1998) Medium-Voltage Power Cable

UL 1242 (1996; Rev Apr 1997) Intermediate Metal Condui

1.2 GENERAL REQUIREMENTS

1.2.1 Terminology

Terminology used in this specification is as defined in IEEE Std 100.

1.2.2 Service Conditions

Items provided under this section shall be specifically suitable for the following service conditions:

a. Altitude 151 feet
b. Ambient Temperature 90 degrees F
c. Frequency 60 HZ
d. Ventilation 6600 CFM
e. Seismic Zone 2A
f. Humidity Control 80% Max.

1.3 SUBMITTALS

Governmental approval is required for submittals with a "GA" designation; submittals having an "FIO" designation are for information only. The following shall be submitted in accordance with Section 01330 SUBMITTAL PROCEDURES:

SD-01 Data

Fault Current and Protective Devices Coordination Studies; GA.

The study shall be submitted with protective device equipment submittals. Not time extension or similar contract modifications will be granted for work arising out of the requirements for this study. Approval of protective devices proposed shall be based on recommendations of this study. The Government shall not be held responsible for any changes to equipment, device ratings, settings, or additional labor for installation of equipment or devices ordered and/or procured prior to approval of the study.

Manufacturer's Catalog Data; GA.

Catalog cuts, brochures, circulars, specifications, product data, and printed information in sufficient detail and scope to verify compliance with the requirements of the contract documents.

Material, Equipment, and Fixture Lists; GA.

A complete itemized listing of equipment and materials proposed for incorporation into the work. Each entry shall include an item number, the quantity of items proposed, and the name of the manufacturer of each such item.

Installation Procedures; FIO.

As a minimum, installation procedures for transformers, substations, switchgear, and medium-voltage cable terminations and splices.

Procedures shall include cable pulling plans, diagrams, instructions, and precautions required to install, adjust, calibrate, and test the devices and equipment.

SD-04 Drawings

Electrical Distribution System; GA.

Detail drawings consisting of equipment drawings, illustrations, schedules, instructions, diagrams manufacturers standard installation drawings and other information necessary to define the installation and enable the Government to check conformity with the requirements of the contract drawings.

If departures from the contract drawings are deemed necessary by the Contractor, complete details of such departures shall be included with the detail drawings. Approved departures shall be made at no additional cost to the Government.

Detail drawings shall show how components are assembled, function together and how they will be installed on the project. Data and drawings for component parts of an item or system shall be coordinated and submitted as a unit. Data and drawings shall be coordinated and included in a single submission. Multiple submissions for the same equipment or system are not acceptable except where prior approval has been obtained from the Contracting Officer. In such cases, a list of data to be submitted later shall be included with the first submission. Detail drawings shall consist of the following:

a. Detail drawings showing physical arrangement, construction details, connections, finishes, materials used in fabrication, provisions for conduit or busway entrance, access requirements for installation and maintenance, physical size, electrical characteristics, foundation and support details, and equipment weight. Drawings shall be drawn to scale and/or dimensioned. All optional items shall be clearly identified as included or excluded.

b. Internal wiring diagrams of equipment showing wiring as actually provided for this project. External wiring connections shall be clearly identified.

Detail drawings shall as a minimum depict the installation of the following items:

a. Medium-voltage cables and accessories including cable installation plan.

b. Transformers.
c. Switchgear.

d. Surge arresters.

As-Built Drawings; GA.

The as-built drawings shall be a record of the construction as installed. The drawings shall include the information shown on the contract drawings as well as deviations, modifications, and changes from the contract drawings, however minor. The as-built drawings shall be a full sized set of prints marked to reflect deviations, modifications, and changes. The as-built drawings shall be complete and show the location, size, dimensions, part identification, and other information. Additional sheets may be added. The as-built drawings shall be jointly inspected for accuracy and completeness by the Contractor's quality control representative and by the Contracting Officer prior to the submission of each monthly pay estimate. Upon completion of the work, the Contractor shall provide three full sized sets of the marked prints to the Contracting Officer for approval. If upon review, the as-built drawings are found to contain errors and/or omissions, they will be returned to the Contractor for correction. The Contractor shall correct and return the as-built drawings to the Contracting Officer for approval within 10 calendar days from the time the drawings are returned to the Contractor.

SD-09 Reports

Factory Test; FIO.

Certified factory test reports shall be submitted when the manufacturer performs routine factory tests, including tests required by standards listed in paragraph REFERENCES. Results of factory tests performed shall be certified by the manufacturer, or an approved testing laboratory, and submitted within 7 days following successful completion of the tests. The manufacturer's pass-fail criteria for tests specified in paragraph FIELD TESTING shall be included.

Field Testing; GA.

A proposed field test plan, 20 days prior to testing the installed system. No field test shall be performed until the test plan is approved. The test plan shall consist of complete field test procedures including tests to be performed, test equipment required, and tolerance limits.

Test Reports; GA.

Six copies of the information described below in 8-1/2 by 11 inch binders having a minimum of three rings, including a separate section for each test. Sections shall be separated by heavy plastic dividers with tabs.

a. A list of equipment used, with calibration certifications.
b. A copy of measurements taken.
c. The dates of testing.
d. The equipment and values to be verified.
e. The condition specified for the test.
f. The test results, signed and dated.
g. A description of adjustments made.

Cable Installation Reports; GA.

Six copies of the information described below in 8-1/2 by 11 inch binders having a minimum of three rings from which material may readily be removed and replaced, including a separate section for each cable pull. Sections shall be separated by heavy plastic dividers with tabs, with all data sheets signed and dated by the person supervising the pull.

a. Site layout drawing with cable pulls numerically identified.
b. A list of equipment used, with calibration certifications. The manufacturer and quantity of lubricant used on pull.
c. The cable manufacturer and type of cable.
d. The dates of cable pulls, time of day, and ambient temperature.
e. The length of cable pull and calculated cable pulling tensions.
f. The actual cable pulling tensions encountered during pull.

SD-13 Certificates

Materials and Equipment; GA.

Where materials or equipment are specified to conform to the standards of the Underwriters Laboratories (UL) or to be constructed or tested, or both, in accordance with the standards of the American National Standards Institute (ANSI), the Institute of Electrical and Electronics Engineers (IEEE), or the National Electrical Manufacturers Association (NEMA), the Contractor shall submit proof that the items provided conform to such requirements. The label of, or listing by, UL will be acceptable as evidence that the items conform. Either a certification or a published catalog specification data statement, to the effect that the item is in accordance with the referenced ANSI or IEEE standard, will be acceptable as evidence that the item conforms. A similar certification or published catalog specification data statement to the effect that the item is in accordance with the referenced NEMA standard, by a company listed as a member company of NEMA, will be acceptable as evidence that the item conforms. In lieu of such certification or published data, the Contractor may submit a certificate from a recognized testing agency equipped and competent to perform such services, stating that the items have been tested and that they conform to the requirements listed, including methods of testing of the specified agencies. Compliance with above-named requirements does not relieve the Contractor from compliance with any other requirements of the specifications.

Cable Splicer Qualification; GA.

A certification that contains the names and the qualifications of people recommended to perform the splicing and termination of medium-voltage cables approved for installation under this contract. The certification shall indicate that any person recommended to perform actual splicing and terminations has been adequately trained in the proper techniques and have had at least three recent years of experience in splicing and terminating the same or similar types of cables approved for installation. In addition, any person recommended by the Contractor may be required to perform a practice splice and termination, in the presence of the

Contracting Officer, before being approved as a qualified installer of medium-voltage cables. If that additional requirement is imposed, the Contractor shall provide short sections of the approved types of cables along with the approved type of splice and termination kits, and detailed manufacturer's instruction for the proper splicing and termination of the approved cable types.

Cable Installer Qualifications; GA.

The Contractor shall provide at least one onsite person in a supervisory position with a documentable level of competency and experience to supervise all cable pulling operations. A resume shall be provided showing the cable installers' experience in the last three years, including a list of references complete with points of contact, addresses and telephone numbers.

SD-19 OPERATION AND MAINTENANCE MANUALS

Electrical Distribution System; GA.

Six copies of operation and maintenance manuals, within 7 calendar days following the completion of tests and including assembly, installation, operation and maintenance instructions, spare parts data which provides supplier name, current cost, catalog order number, and a recommended list of spare parts to be stocked. Manuals shall also include data outlining detailed procedures for system startup and operation, and a troubleshooting guide which lists possible operational problems and corrective action to be taken. A brief description of all equipment, basic operating features, and routine maintenance requirements shall also be included. Documents shall be bound in a binder marked or identified on the spine and front cover. A table of contents page shall be included and marked with pertinent contract information and contents of the manual. Tabs shall be provided to separate different types of documents, such as catalog ordering information, drawings, instructions, and spare parts data. Index sheets shall be provided for each section of the manual when warranted by the quantity of documents included under separate tabs or dividers.

Three additional copies of the instructions manual shall be provided within 30 calendar days following the manuals.

1.4 DELIVERY, STORAGE, AND HANDLING

Devices and equipment shall be visually inspected by the Contractor when received and prior to acceptance from conveyance. Stored items shall be protected from the environment in accordance with the manufacturer's published instructions. Damaged items shall be replaced.

1.5 EXTRA MATERIALS

One additional spare fuse or fuse element for each furnished fuse or fuse element shall be delivered to the contracting officer when the electrical system is accepted. Two complete sets of all special tools required for maintenance shall be provided, complete with a suitable tool box. Special tools are those that only the manufacturer provides, for special purposes

(to access compartments, or operate, adjust, or maintain special parts).

PART 2 PRODUCTS

2.1 STANDARD PRODUCT

Material and equipment shall be the standard product of a manufacturer regularly engaged in the manufacture of the product and shall essentially duplicate items that have been in satisfactory use for at least 2 years prior to bid opening. Items of the same classification shall be identical including equipment, assemblies, parts, and components.

2.2 NAMEPLATES

2.2.1 General

Each major component of this specification shall have the manufacturer's name, address, type or style, model or serial number, and catalog number on a nameplate securely attached to the equipment. Nameplates shall be made of noncorrosive metal. Equipment containing liquid dielectrics shall have the type of dielectric on the nameplate. Sectionalizer switch nameplates shall have a schematic with all switch positions shown and labeled. As a minimum, nameplates shall be provided for transformers, circuit breakers, meters, switches, and switchgear.

2.3 CORROSION PROTECTION

2.3.1 Aluminum Materials

Aluminum shall not be used.

2.3.2 Ferrous Metal Materials

2.3.2.1 Hardware

Ferrous metal hardware shall be hot-dip galvanized in accordance with ASTM A 153 and ASTM A 123.

2.3.2.2 Equipment

Equipment and component items, including but not limited to transformer stations and ferrous metal luminaries not hot-dip galvanized or porcelain enamel finished, shall be provided with corrosion-resistant finishes which shall withstand 120 hours of exposure to the salt spray test specified in ASTM B 117 without loss of paint or release of adhesion of the paint primer coat to the metal surface in excess of 1/16 inch from the test mark. The scribed test mark and test evaluation shall be in accordance with ASTM D 1654 with a rating of not less than 7 in accordance with TABLE 1, (procedure A). Cut edges or otherwise damaged surfaces of hot-dip galvanized sheet steel or mill galvanized sheet steel shall be coated with a zinc rich paint conforming to the manufacturer's standard.

2.3.3 Finishing

Painting required for surfaces not otherwise specified and finish painting of items only primed at the factory shall be as specified in Section 09900 PAINTING, GENERAL.

2.4 CABLES

Cables shall be single conductor type unless otherwise indicated.

2.4.1 Medium-Voltage Cables

2.4.1.1 General

Cable construction shall be Type MV, conforming to NFPA 70 and UL 1072 Cables shall be manufactured for use in applications as indicated.

2.4.1.2 Ratings

Cables shall be rated for a circuit voltage of 15 kV.

2.4.1.3 Conductor Material

Underground cables shall be soft drawn copper complying with ASTM B 3 and ASTM B 8 for regular concentric and compressed stranding or ASTM B 496 for compact stranding.

2.4.1.4 Insulation

Cable insulation shall be ethylene-propylene-rubber (EPR) insulation conforming to the requirements of NEMA WC 8 and AEIC CS6. A 133 percent insulation level shall be used on 15 kV cables.

2.4.1.5 Shielding

Cables rated for 2 kV and above shall have a semiconducting conductor shield, a semiconducting insulation shield, and an overall copper tape shield for each phase. The shield tape shall be sized to meet IEEE C2 requirements for a ground fault availability of 3000 amperes.

2.4.1.6 Jackets

Cables shall be provided with a PVC jacket. Direct buried cables shall be rated for direct burial.

2.4.2 Low-Voltage Cables

Cables shall be rated 600 volts and shall conform to the requirements of NFPA 70, and must be UL listed for the application or meet the applicable section of either ICEA or NEMA standards.

2.4.2.1 Conductor Material

Underground cables shall be annealed copper complying with ASTM B 3 and ASTM B 8. Intermixing of copper and aluminum conductors is not permitted.

2.4.2.2 Insulation

Insulation must be in accordance with NFPA 70, and must be UL listed for the application or meet the applicable sections of either ICEA, or NEMA standards.

2.4.2.3 Jackets

Multiconductor cables shall have on overall PVC outer jacket.

2.4.2.4 In Duct

Cables shall be single-conductor cable, in accordance with NFPA 70.

2.5 CABLE JOINTS, TERMINATIONS, AND CONNECTORS

2.5.1 Medium-Voltage Cable Joints

Medium-voltage cable joints shall comply with IEEE Std 404 and IEEE Std 592. Medium-voltage cable terminations shall comply with IEEE Std 48. Joints shall be the standard products of a manufacturer and shall be either of the factory preformed type or of the kit type containing tapes and other required parts. Joints shall have ratings not less than the ratings of the cables on which they are installed. Splice kits may be of the heat-shrinkable type for voltages up to 15 kV, of the premolded splice and connector type, the conventional taped type, or the resin pressure-filled overcast taped type for voltages up to 35 kV; except that for voltages of 7.5 kV or less a resin pressure-filled type utilizing a plastic-tape mold is acceptable. Joints used in manholes, handholes, vaults and pull boxes shall be certified by the manufacturer for waterproof, submersible applications.

2.5.2 Medium-Voltage Separable Insulated Connectors

Separable insulated connectors shall comply with IEEE Std 386 and IEEE Std 592 and shall be of suitable construction or standard splice kits shall be used. Separable insulated connectors are acceptable for voltages up to 35 kV. Connectors shall be of the loadbreak type, of suitable construction for the application and the type of cable connected, and shall include cable shield adaptors. Separable insulated connectors shall not be used as substitutes for conventional permanent splices. External clamping points and test points shall be provided.

2.5.3 Low-Voltage Cable Splices

Low-voltage cable splices and terminations shall be rated at not less than 600 Volts. Splices in conductors No. 10 AWG and smaller shall be made with an insulated, solderless, pressure type connector, conforming to the applicable requirements of UL 486A. Splices in conductors No. 8 AWG and larger shall be made with noninsulated, solderless, pressure type connector, conforming to the applicable requirements of UL 486A and UL 486B. Splices shall then be covered with an insulation and jacket material equivalent to the conductor insulation and jacket. Splices below grade or in wet locations shall be sealed type conforming to ANSI C119.1 or shall be

waterproofed by a sealant-filled, thick wall, heat shrinkable, thermosetting tubing or by pouring a thermosetting resin into a mold that surrounds the joined conductors.

2.5.4 Terminations

Terminations shall be in accordance with IEEE Std 48, Class 1 or Class 2; of the molded elastomer, wet-process porcelain, prestretched elastomer, heat-shrinkable elastomer, or taped type. Acceptable elastomers are track-resistant silicone rubber or track-resistant ethylene propylene compounds, such as ethylene propylene rubber or ethylene propylene diene monomer. Separable insulated connectors may be used for apparatus terminations, when such apparatus is provided with suitable bushings. Terminations shall be of the outdoor type, except that where installed inside outdoor equipment housings which are sealed against normal infiltration of moisture and outside air, indoor, Class 2 terminations are acceptable. Class 3 terminations are not acceptable. Terminations, where required, shall be provided with mounting brackets suitable for the intended installation and with grounding provisions for the cable shielding, metallic sheath, and armor.

2.5.4.1 Factory Preformed Type

Molded elastomer, wet-process porcelain, prestretched, and heat-shrinkable terminations shall utilize factory preformed components to the maximum extent practicable rather than tape build-up. Terminations shall have basic impulse levels as required for the system voltage level. Leakage distances shall comply with wet withstand voltage test requirements of IEEE Std 48 for the next higher Basic Insulation Level (BIL) level. Anti-tracking tape shall be applied over exposed insulation of preformed molded elastomer terminations.

2.5.4.2 Taped Terminations

Taped terminations shall use standard termination kits providing terminal connectors, field-fabricated stress cones, and rain hoods. Terminations shall be at least 12-1/2 inches long from the end of the tapered cable jacket to the start of the terminal connector, or not less than the kit manufacturer's recommendations, whichever is greater.

2.6 CONDUIT AND DUCTS

Ducts shall be single, round-bore type, with wall thickness and fittings suitable for the application. Duct lines shall be concrete-encased, thin-wall type.

2.6.1 Metallic Conduit

Intermediate metal conduit shall comply with UL 1242. Rigid galvanized steel conduit shall comply with UL 6 and ANSI C80.1. Metallic conduit fittings and outlets shall comply with UL 514A and NEMA FB 1.

2.6.2 Nonmetallic Ducts

2.6.2.1 Concrete Encased Ducts

UL 651 Schedule 40 or NEMA TC 6 Type EB.

2.6.3 Conduit Sealing Compound

Compounds for sealing ducts and conduit shall have a putty-like consistency workable with the hands at temperatures as low as 35 degrees F, shall neither slump at a temperature of 300 degrees F, nor harden materially when exposed to the air. Compounds shall adhere to clean surfaces of fiber or plastic ducts; metallic conduits or conduit coatings; concrete, masonry, or lead; any cable sheaths, jackets, covers, or insulation materials; and the common metals. Compounds shall form a seal without dissolving, noticeably changing characteristics, or removing any of the ingredients. Compounds shall have no injurious effect upon the hands of workmen or upon materials.

2.7 MANHOLES, HANDHOLES, AND PULLBOXES

Manholes, handholes, and pullboxes shall be as indicated. Strength of manholes, handholes, and pullboxes and their frames and covers shall conform to the requirements of IEEE C2. Precast-concrete manholes shall have the required strength established by ASTM C 478, ASTM C 478M. Frames and covers shall be made of gray cast iron and a machine-finished seat shall be provided to ensure a matching joint between frame and cover. Cast iron shall comply with ASTM A 48, Class 30B, minimum. Handholes for low voltage cables installed in parking lots, sidewalks, and turfed areas shall be fabricated from an aggregate consisting of sand and with continuous woven glass strands having an overall compressive strength of at least 10,000 psi and a flexural strength of at least5,000 psi. Pullbox and handhole covers in sidewalks, and turfed areas shall be of the same material as the box. Concrete pullboxes shall consist of precast reinforced concrete boxes, extensions, bases, and covers.

2.8 POLES AND HARDWARE

Poles and hardware shall be in accordance with Section 16370 ELECTRICAL DISTRIBUTION SYSTEM, AERIAL.

2.9 GROUNDING AND BONDING

2.9.1 Driven Ground Rods

Ground rods shall be copper-clad steel conforming to UL 467 not less than 3/4 inch in diameter by 10 feet in length. Sectional type rods may be used.

2.9.2 Grounding Conductors

Grounding conductors shall be bare, except where installed in conduit with associated phase conductors. Insulated conductors shall be of the same material as phase conductors and green color-coded, except that conductors shall be rated no more than 600 volts. Bare conductors shall be ASTM B 8 soft-drawn unless otherwise indicated. Aluminum is not acceptable.

2.10 CONCRETE AND REINFORCEMENT

Concrete work shall have minimum 3000 psi compressive strength and conform to the requirements of Section 03300 CAST-IN-PLACE STRUCTURAL CONCRETE. Concrete reinforcing shall be as specified in Section 03200 CONCRETE REINFORCEMENT.

2.11 CABLE FIREPROOFING SYSTEMS

Cable fireproofing systems shall be listed in FM P7825a as a fire-protective coating or tape approved for grouped electrical conductors and shall be suitable for application on the type of medium-voltage cables provided. After being fully cured, materials shall be suitable for use where exposed to oil, water, gases, salt water, sewage, and fungus and shall not damage cable jackets or insulation. Asbestos materials are not acceptable.

2.11.1 Fireproof Coating

Cable fireproofing coatings shall be compounded of water-based thermoplastic resins, flame-retardant chemicals, and inorganic noncombustible fibers and shall be suitable for the application methods used. Coatings applied on bundled cables shall have a derating factor of less than 5 percent, and a dielectric strength of 95 volts per mil minimum after curing.

2.11.2 Fireproofing Tape

Fireproofing tape shall be at least 2 inches wide and shall be a flexible, conformable, polymeric, elastomer tape designed specifically for fireproofing cables.

2.11.3 Plastic Tape

Preapplication plastic tape shall be pressure sensitive, 10 mil thick, conforming to UL 510.

2.12 FACTORY TESTS

Factory tests shall be performed, as follows, in accordance with the applicable publications and with other requirements of these specifications. The Contracting Officer shall be notified at least 10 days before the equipment is ready for testing. The Contracting Officer reserves the right to witness the tests.

a. Transformers: Manufacturer's standard tests in accordance with IEEE ANSI/IEEE C57.12.00.

b. Transformers rated 200 kVA and above: Reduced full-wave, chopped-wave, and full-wave impulse test on each line and neutral terminal, in accordance with IEEE ANSI/IEEE C57.98.

c. High-Voltage Air Switches: Manufacturer's standard tests in accordance with IEEE ANSI/IEEE C37.34 and IEEE ANSI/IEEE C37.41.

d. Instrument Current Transformers: Manufacturer's standard tests in accordance with IEEE ANSI/IEEE C57.13.

e. Factory Preformed Terminations: Wet withstand voltage tests in accordance with IEEE Std 48 for the next higher BIL level.

f. Electrical Power Insulators: Manufacturer's standard tests in accordance with ANSI C29.1.

PART 3 EXECUTION

3.1 GENERAL INSTALLATION REQUIREMENTS

Equipment and devices shall be installed and energized in accordance with the manufacturer's published instructions. Circuits installed aerially shall conform to the rquirements of Section 16370 ELECTRICAL DISTRIBUTION SYSTEM, AERIAL. Steel conduits installed underground shall be installed and protected from corrosion in conformance with the requirements of Section 16415 ELECTRICAL WORK, INTERIOR. Except as covered herein, excavation, trenching, and backfilling shall conform to the requirements of Section 02316 EXCAVATION, TRENCHING, AND BACKFILLING FOR UTILITIES SYSTEMS. Concrete work shall have minimum 3000 psi compressive strength and conform to the requirements of Section 03300 CAST-IN-PLACE STRUCTURAL CONCRETE.

3.1.1 Conformance to Codes

The installation shall comply with the requirements and recommendations of NFPA 70 and IEEE C2 as applicable.

3.1.2 Verification of Dimensions

The Contractor shall become familiar with details of the work, shall verify dimensions in the field, and shall advise the Contracting Officer of any discrepancy before performing any work.

3.2 CABLE INSTALLATION

The Contractor shall obtain from the manufacturer an installation manual or set of instructions which addresses such aspects as cable construction, insulation type, cable diameter, bending radius, cable temperature, lubricants, coefficient of friction, conduit cleaning, storage procedures, moisture seals, testing for and purging moisture, etc. The Contractor shall then perform pulling calculations and prepare a pulling plan which shall be submitted along with the manufacturers instructions in accordance with SUBMITTALS.

3.2.1 Cable Installation Plan and Procedure

Cable shall be installed strictly in accordance with the cable manufacturer's recommendations. Each circuit shall be identified by means of a fiber, laminated plastic, or non-ferrous metal tags, or approved equal, in each manhole, handhole, junction box, and each terminal. Each tag shall contain the following information; cable type, conductor size,

circuit number, circuit voltage, cable destination and phase identification.

3.2.1.1 Cable Inspection

The cable reel shall be inspected for correct storage positions, signs of physical damage, and broken end seals. If end seal is broken, moisture shall be removed from cable in accordance with the cable manufacturer's recommendations.

3.2.1.2 Duct Cleaning

Duct shall be cleaned with an assembly that consists of a flexible mandrel (manufacturers standard product in lengths recommended for the specific size and type of duct) that is 1/4 inch less than inside diameter of duct, 2 wire brushes, and a rag. The cleaning assembly shall be pulled through conduit a minimum of 2 times or until less than a volume of 8 cubic inches of debris is expelled from the duct.

3.2.1.3 Duct Lubrication

The cable lubricant shall be compatible with the cable jacket for cable that is being installed. Application of lubricant shall be in accordance with lubricant manufacturer's recommendations.

3.2.1.4 Cable Installation

The Contractor shall provide a cable feeding truck and a cable pulling winch as required. The Contractor shall provide a pulling grip or pulling eye in accordance with cable manufacturer's recommendations. The pulling grip or pulling eye apparatus shall be attached to polypropylene or manilla rope followed by lubricant front end packs and then by power cables. A dynamometer shall be used to monitor pulling tension. Pulling tension shall not exceed cable manufacturer's recommendations. The Contractor shall not allow cables to cross over while cables are being fed into duct. For cable installation in cold weather, cables shall be kept at 50 degrees F temperature for at least 24 hours before installation.

3.2.1.5 Cable Installation Plan

The Contractor shall submit a cable installation plan for all cable pulls in accordance with the detail drawings portion of paragraph SUBMITTALS. Cable installation plan shall include:

a. Site layout drawing with cable pulls identified in numeric order of expected pulling sequence and direction of cable pull.

b. List of cable installation equipment.

c. Lubricant manufacturer's application instructions.

d. Procedure for resealing cable ends to prevent moisture from entering cable.

e. Cable pulling tension calculations of all cable pulls.

f. Cable percentage conduit fill.

g. Cable sidewall thrust pressure.

h. Cable minimum bend radius and minimum diameter of pulling wheels used.

i. Cable jam ratio.

j. Maximum allowable pulling tension on each different type and size of conductor.

k. Maximum allowable pulling tension on pulling device.

3.2.2 Duct Line

Cables shall be installed in duct lines where indicated. Cable splices in low-voltage cables shall be made in manholes and handholes only, except as otherwise noted. Cable joints in medium-voltage cables shall be made in manholes or approved pullboxes only. Neutral and grounding conductors shall be installed in the same duct with their associated phase conductors.

3.2.3 Electric Manholes

Cables shall be routed around the interior walls and securely supported from walls on cables racks. Cable routing shall minimize cable crossover, provide access space for maintenance and installation of additional cables, and maintain cable separation in accordance with IEEE C2.

3.3 CABLE JOINTS

Medium-voltage cable joints shall be made by qualified cable splicers only. Qualifications of cable splicers shall be submitted in accordance with paragraph SUBMITTALS. Shields shall be applied as required to continue the shielding system through each entire cable joint. Shields may be integrally molded parts of preformed joints. Shields shall be grounded at each joint or in accordance with manufacturer's recommended practice. Cable joints shall provide insulation and jacket equivalent to that of the associated cable. Armored cable joints shall be enclosed in compound-filled, cast-iron or alloy, splice boxes equipped with stuffing boxes and armor clamps of a suitable type and size for the cable being installed.

3.4 FIREPROOFING

Each medium-voltage cable and conductor in manholes shall be fire-proofed for their entire length within the manhole. Where cables and conductors have been lubricated to enhance pulling into ducts, the lubricant shall be removed from cables and conductors exposed in the manhole before fireproofing. Fire-stops shall be installed in each conduit entering or leaving a manhole.

3.4.1 Tape Method

Before application of fireproofing tape, plastic tape wrapping shall be applied over exposed metallic items such as the cable ground wire, metallic outer covering, or armor to minimize the possibility of corrosion from the fireproofing materials and moisture. Before applying fireproofing tape, irregularities of cables, such as at cable joints, shall be evened out with insulation putty. A flexible conformable polymeric elastomer fireproof tape shall be wrapped tightly around each cable spirally in 1/2 lapped wrapping or in 2 butt-jointed wrappings with the second wrapping covering the joints of the first.

3.5 DUCT LINES

3.5.1 Requirements

Numbers and sizes of ducts shall be as indicated. Duct lines shall be laid with a minimum slope of 4 inches per 100 feet. Depending on the contour of the finished grade, the high-point may be at a terminal, a manhole, a handhole, or between manholes or handholes. Short-radius manufactured 90-degree duct bends may be used only for pole or equipment risers, unless specifically indicated as acceptable. The minimum manufactured bend radius shall be 18 inches for ducts of less than 3 inch diameter, and 36 inches for ducts 3 inches or greater in diameter. Otherwise, long sweep bends having a minimum radius of 25 feet shall be used for a change of direction of more than 5 degrees, either horizontally or vertically. Both curved and straight sections may be used to form long sweep bends, but the maximum curve used shall be 30 degrees and manufactured bends shall be used. Ducts shall be provided with end bells whenever duct lines terminate in manholes or handholes.

3.5.2 Treatment

Ducts shall be kept clean of concrete, dirt, or foreign substances during construction. Field cuts requiring tapers shall be made with proper tools and match factory tapers. A coupling recommended by the duct manufacturer shall be used whenever an existing duct is connected to a duct of different material or shape. Ducts shall be stored to avoid warping and deterioration with ends sufficiently plugged to prevent entry of any water or solid substances. Ducts shall be thoroughly cleaned before being laid. Plastic ducts shall be stored on a flat surface and protected from the direct rays of the sun.

3.5.3 Concrete Encasement

Ducts requiring concrete encasements shall comply with NFPA 70. The separation between adjacent electric power and communication ducts shall conform to IEEE C2. Duct line encasements shall be monolithic construction. Where a connection is made to a previously poured encasement, the new encasement shall be well bonded or doweled to the existing encasement. The Contractor shall submit proposed bonding method for approval in accordance with the detail drawing portion of paragraph SUBMITTALS. At any point tops of concrete encasements shall be not less than the cover requirements listed in NFPA 70. Where ducts are jacked under existing pavement, rigid steel conduit will be installed because of

its strength. To protect the corrosion-resistant conduit coating, predrilling or installing conduit inside a larger iron pipe sleeve (jack-and-sleeve) is required. Separators or spacing blocks shall be made of steel, concrete, plastic, or a combination of these materials placed not farther apart than 4 feet on centers. Ducts shall be securely anchored to prevent movement during the placement of concrete and joints shall be staggered at least 6 inches vertically.

3.5.4 Installation of Couplings

Joints in each type of duct shall be made up in accordance with the manufacturer's recommendations for the particular type of duct and coupling selected and as approved.

3.5.4.1 Plastic Duct

Duct joints shall be made by brushing a plastic solvent cement on insides of plastic coupling fittings and on outsides of duct ends. Each duct and fitting shall then be slipped together with a quick 1/4-turn twist to set the joint tightly.

3.5.5 Duct Line Markers

Duct line markers shall be provided at the ends of long duct line stubouts or for other ducts whose locations are indeterminate because of duct curvature or terminations at completely below-grade structures. In addition to markers, a 5 mil brightly colored plastic tape, not less than 3 inches in width and suitably inscribed at not more than 10 feet on centers with a continuous metallic backing and a corrosion-resistant 1 mil metallic foil core to permit easy location of the duct line, shall be placed approximately 12 inches below finished grade levels of such lines.

3.6 MANHOLES, HANDHOLES, AND PULLBOXES

3.6.1 General

Manholes shall be constructed approximately where shown. The exact location of each manhole shall be determined after careful consideration has been given to the location of other utilities, grading, and paving. The location of each manhole shall be approved by the Contracting Officer before construction of the manhole is started. Manholes shall be the type noted on the drawings and shall be constructed in accordance with the applicable details as indicated. Top, walls, and bottom shall consist of reinforced concrete. Walls and bottom shall be of monolithic concrete construction. The Contractor may at his option utilize monolithically constructed precast-concrete manholes having the required strength and inside dimensions as required by the drawings or specifications. In paved areas, frames and covers for manhole and handhole entrances in vehicular traffic areas shall be flush with the finished surface of the paving. In unpaved areas, the top of manhole covers shall be approximately 1/2 inch above the finished grade. Where existing grades that are higher than finished grades are encountered, concrete assemblies designed for the purpose shall be installed to elevate temporarily the manhole cover to existing grade level. All duct lines entering manholes must be installed

on compact soil or otherwise supported when entering a manhole to prevent shear stress on the duct at the point of entrance to the manhole. Duct lines entering cast-in-place concrete manholes shall be cast in-place with the manhole. Duct lines entering precast concrete manholes through a precast knockout penetration shall be grouted tight with a portland cement mortar. PVC duct lines entering precast manholes through a PVC endbell shall be solvent welded to the endbell. A cast metal grille-type sump frame and cover shall be installed over the manhole sump. A cable-pulling iron shall be installed in the wall opposite each duct line entrance.

3.6.2 Electric Manholes

Cables shall be securely supported from walls by hot-dip galvanized cable racks with a plastic coating over the galvanizing and equipped with adjustable hooks and insulators. The number of cable racks indicated shall be installed in each manhole and not less than 2 spare hooks shall be installed on each cable rack. Insulators shall be made of high-glazed porcelain. Insulators will not be required on spare hooks.

3.6.3 Handholes

Handholes shall be located approximately as shown. Handholes shall be of the type noted on the drawings and shall be constructed in accordance with the details shown.

3.6.4 Pullboxes

Pullbox tops shall be flush with sidewalks or curbs or placed 1/2 inchabove surrounding grades when remote from curbed roadways or sidewalks. Covers shall be marked "Low-Voltage" and provided with 2 lifting eyes and 2 hold-down bolts. Each box shall have a suitable opening for a ground rod. Conduit, cable, ground rod entrances, and unused openings shall be sealed with mortar.

3.6.5 Ground Rods

A ground rod shall be installed at the manholes, handholes and pullboxes. Ground rods shall be driven into the earth before the manhole floor is poured so that approximately 4 inches of the ground rod will extend above the manhole floor. When precast concrete manholes are used, the top of the ground rod may be below the manhole floor and a No. 1/0 AWG ground conductor brought into the manhole through a watertight sleeve in the manhole wall.

3.7 CONNECTIONS TO BUILDINGS

Cables shall be extended into the various buildings as indicated, and shall be connected to the first applicable termination point in each building. Interfacing with building interior conduit systems shall be at conduit stubouts terminating 5 feet outside of a building and 2 feet below finished grade as specified and provided under Section 16415 ELECTRICAL WORK, INTERIOR. After installation of cables, conduits shall be sealed with caulking compound to prevent entrance of moisture or gases into buildings.

3.8 GROUNDING

A ground ring consisting of the indicated configuration of bare copper conductors and driven ground rods shall be installed as shown. Metallic frames and covers of handholes and pull boxes shall be grounded by use of a braided, copper ground strap with equivalent ampacity of No. 6 AWG.

3.8.1 Grounding Electrodes

Grounding electrodes shall be installed as shown on the drawings and as follows:

a. Driven rod electrodes - Unless otherwise indicated, ground rods shall be driven into the earth until the tops of the rods are approximately 1 foot below finished grade.

b. Ground ring - A ground ring shall be installed as shown consisting of bare copper conductors installed 24 inches, plus or minus 3 inches, below finished top of soil grade. Ground ring conductors shall be sized as shown.

c. Additional electrodes - When the required ground resistance is not met, additional electrodes shall be provided interconnected with grounding conductors to achieve the specified ground resistance. The additional electrodes will be up to three,10 feet rods spaced a minimum of 10 feet apart. In high ground resistance, UL listed chemically charged ground rods may be used. If the resultant resistance exceeds 25 ohms measured not less than 48 hours after rainfall, the Contracting Officer shall be notified immediately.

3.8.2 Grounding and Bonding Connections

Connections above grade shall be made by the fusion-welding process or with bolted solderless connectors, in compliance with UL 467, and those below grade shall be made by a fusion-welding process.

3.8.3 Grounding and Bonding Conductors

Grounding and bonding conductors include conductors used to bond equipment frames to the grounding electrode system. Grounding and bonding conductors shall be sized as shown, and located to provide maximum physical protection. Bends greater than 45 degrees in ground conductors are not permitted. Routing of ground conductors through concrete shall be avoided. When concrete penetration is necessary, nonmetallic conduit shall be cast flush with the points of concrete entrance and exit so as to provide an opening for the ground conductor, and the opening shall be sealed with a suitable compound after installation.

3.8.4 Manhole, Handhole, or Concrete Pullbox Grounding

Ground rods installed in manholes, handholes, or concrete pullboxes shall be connected to cable racks, cable-pulling irons, the cable shielding, metallic sheath, and armor at each cable joint or splice by means of a No. 4 AWG braided tinned copper wire. Connections to metallic cable sheaths

shall be by means of tinned terminals soldered to ground wires and to cable sheaths. Care shall be taken in soldering not to damage metallic cable sheaths or shields. Ground rods shall be protected with a double wrapping of pressure-sensitive plastic tape for a distance of 2 inches above and 6 inches below concrete penetrations. Grounding electrode conductors shall be neatly and firmly attached to manhole or handhole walls and the amount of exposed bare wire shall be held to a minimum.

3.9 FIELD TESTING

3.9.1 General

Field testing shall be performed in the presence of the Contracting Officer. The Contractor shall notify the Contracting Officer 10 days prior to conducting tests. The Contractor shall furnish all materials, labor, and equipment necessary to conduct field tests. The Contractor shall perform all tests and inspections recommended by the manufacturer unless specifically waived by the Contracting Officer. The Contractor shall maintain a written record of all tests which includes date, test performed, personnel involved, devices tested, serial number and name of test equipment, and test results. Field test reports shall be signed and dated by the Contractor.

3.9.2 Safety

The Contractor shall provide and use safety devices such as rubber gloves, protective barriers, and danger signs to protect and warn personnel in the test vicinity. The Contractor shall replace any devices or equipment which are damaged due to improper test procedures or handling.

3.9.3 Ground-Resistance Tests

The resistance of the ground ring shall be measured using the fall-of-potential method defined in IEEE Std 81. Ground resistance measurements shall be made before the electrical distribution system is energized and shall be made in normally dry conditions not less than 48 hours after the last rainfall. Resistance measurements of separate grounding electrode systems shall be made before the systems are bonded together below grade. The combined resistance of separate systems may be used to meet the required resistance, but the specified number of electrodes must still be provided.

a. Ground ring - 25 ohms.

3.9.4 Medium-Voltage Cable Test

After installation and before the operating test or connection to an existing system, the medium-voltage cable system shall be given a high potential test. Direct-current voltage shall be applied on each phase conductor of the system by connecting conductors as one terminal and connecting grounds or metallic shieldings or sheaths of the cable as the other terminal for each test. Prior to making the test, the cables shall be isolated by opening applicable protective devices and disconnecting equipment. The test shall be conducted with all splices, connectors, and

terminations in place. The method, voltage, length of time, and other characteristics of the test for initial installation shall be in accordance with NEMA WC 7 or NEMA WC 8 for the particular type of cable installed, except that 28 kV and 35 kV insulation test voltages shall be in accordance with either AEIC CS5 or AEIC CS6 as applicable, and shall not exceed the recommendations of IEEE Std 404 for cable joints and IEEE Std 48 for cable terminations unless the cable and accessory manufacturers indicate higher voltages are acceptable for testing. Should any cable fail due to a weakness of conductor insulation or due to defects or injuries incidental to the installation or because of improper installation of cable, cable joints, terminations, or other connections, the Contractor shall make necessary repairs or replace cables as directed. Repaired or replaced cables shall be retested.

3.9.5 Low-Voltage Cable Test

Low-voltage cable, complete with splices, shall be tested for insulation resistance after the cables are installed, in their final configuration, ready for connection to the equipment, and prior to energization. The test voltage shall be 500 volts dc, applied for one minute between each conductor and ground and between all possible combinations conductors in the same trench, duct, or cable, with all other conductors in the same trench, duct, or conduit. The minimum value of insulation shall be:

R in megohms = (rated voltage in kV + 1) x 1000/(length of cable in feet

Each cable failing this test shall be repaired or replaced. The repaired cable shall be retested until failures have been eliminated.

3.9.6 Pre-Energization Services

Calibration, testing, adjustment, and placing into service of the installation shall be accomplished by a manufacturer's product field service engineer or independent testing company with a minimum of 2 years of current product experience. The following services shall be performed on the equipment listed below. These services shall be performed subsequent to testing but prior to the initial energization. The equipment shall be inspected to ensure that installation is in compliance with the recommendations of the manufacturer and as shown on the detail drawings. Terminations of conductors at major equipment shall be inspected to ensure the adequacy of connections. Bare and insulated conductors between such terminations shall be inspected to detect possible damage during installation. If factory tests were not performed on completed assemblies, tests shall be performed after the installation of completed assemblies. Components shall be inspected for damage caused during installation or shipment to ensure packaging materials have been removed. Components capable of being both manually and electrically operated shall be operated manually prior to the first electrical operation. Components capable of being calibrated, adjusted, and tested shall be calibrated, adjusted, and tested in accordance with the instructions of the equipment manufacturer. Items for which such services shall be provided, but are not limited to, are the following:

a. Secondary unit substation

b. Panelboards

c. Metal-enclosed switchgear

d. Switches

3.9.7 Operating Tests

After the installation is completed, and at such times as the Contracting Officer may direct, the Contractor shall conduct operating tests for approval. The equipment shall be demonstrated to operate in accordance with the requirements herein. An operating test report shall be submitted in accordance with paragraph SUBMITTALS.

3.10 MANUFACTURER'S FIELD SERVICE

3.10.1 Onsite Training

The Contractor shall conduct a training course for the operating staff as designated by the Contracting Officer. The training period shall consist of a total of 16 hours of normal working time and shall start after the system is functionally completed but prior to final acceptance tests. The course instruction shall cover pertinent points involved in operating, starting, stopping, and servicing the equipment, as well as all major elements of the operation and maintenance manuals. Additionally, the course instructions shall demonstrate all routine maintenance operations. A VHS format video tape of the entire training session shall be submitted.

3.10.2 Installation Engineer

After delivery of the equipment, the Contractor shall furnish one or more field engineers, regularly employed by the equipment manufacturer to supervise the installation of the equipment, assist in the performance of the onsite tests, initial operation, and instruct personnel as to the operational and maintenance features of the equipment.

3.11 ACCEPTANCE

Final acceptance of the facility will not be given until the Contractor has successfully completed all tests and after all defects in installation, material or operation have been corrected.

-- End of Section --

SECTION 16410

AUTOMATIC TRANSFER SWITCHES

PART 1 GENERAL

1.1 REFERENCES

The publications listed below form a part of this specification to the extent referenced. The publications are referred to in the text by basic designation only.

INSTITUTE OF ELECTRICAL AND ELECTRONICS ENGINEERS (IEEE)

IEEE ANSI/IEEE C37.90.1	(1989; R 1994) IEEE Standard Surge Withstand Capability (SWC) Tests for Protective Relays and Relay Systems

NATIONAL ELECTRICAL MANUFACTURERS ASSOCIATION (NEMA)

NEMA ICS 1	(1993) Industrial Controls and Systems
NEMA ICS 2	(1993) Industrial Control and Systems Controllers, Contactors, and Overload Relays Rated Not More Than 2,000 Volts AC or 750 Volts DC
NEMA ICS 4	(1993) Industrial Control and Systems Terminal Blocks
NEMA ICS 6	(1993) Industrial Control and Systems Enclosures

NATIONAL FIRE PROTECTION ASSOCIATION (NFPA)

NFPA 70	(1999) National Electrical Code
NFPA 110	(1996) Emergency and Standby Power Systems

UNDERWRITERS LABORATORIES (UL)

UL 1008	(1989; R Sep 97) Transfer Switch Equipmen

1.2 GENERAL REQUIREMENTS

1.2.1 Standard Product

Material and equipment shall be a standard product of a manufacturer regularly engaged in the manufacture of the product and shall essentially duplicate items that have been in satisfactory use for at least 2 years prior to bid opening. The experience use shall include applications of

equipment and materials under similar circumstances and of the same design and rating as the switches specified. Equipment items shall be capable of being serviced by an organization that is, in the opinion of the Contracting Officer, reasonably convenient to the site.

1.2.2 Nameplates

Nameplates shall be made from a corrosion-resistant metal with not less than 1/4 inch tall raised or engraved characters. The nameplate shall be mounted to the front of the enclosure and shall comply with nameplate requirements covered by NEMA ICS 2.

1.3 SUBMITTALS

Government approval is required for submittals with a "GA" designation; submittals having an "FIO" designation are for information only. The following shall be submitted in accordance with Section 01330 SUBMITTAL PROCEDURES:

SD-04 Drawings

Switches; GA.

A one-line diagram of each ATS assembly and elementary, or schematic, and wiring diagram of the unit. An interface equipment connection diagram showing all conduit and wiring between the ATS and all other related equipment. Device and nameplate numbers and item numbers shown on the list of equipment and material shall appear on drawings wherever the item of equipment or material appears. The one-line diagram shall show interlocking provisions and cautionary notes, if any. Operating instructions shall be shown on the one-line diagram or separately, at the discretion of the Contractor. The manufacturer's approved operating instructions for the ATS shall be laminated in plastic and permanently secured to the cabinet where the operator can see them. The one-line and elementary or schematic diagram shall be laminated in plastic and permanently secured to the inside of the front enclosure door. Operating instructions shall be located as required by UL 1008. Unless otherwise approved, the one-line and elementary or schematic diagrams shall appear on the same drawing.

SD-07 Schedules

Material, Equipment, and Fixture Lists; GA.

A complete list of equipment and material proposed, containing an adequate description of each separate item of equipment or material recommended.

SD-09 Reports

Tests; GA.

Certified factory and field test reports, within 14 days following completion of the tests. Reports shall be certified and dated and shall demonstrate that the tests were successfully completed prior to shipment of

the equipment.

SD-13 Certificates

Equipment and Materials; GA.

Evidence of a UL listing, or conformance with applicable NEMA standards. Certificates of compliance will be accepted as proof of compliance when equipment or materials are required to conform to UL standards or to be manufactured and/or tested by NEMA standards. Such certificates are not required if manufacturer's published data, submitted and approved, reflect a UL listing or conformance with applicable publications of NEMA. Proof of the listing by UL and conformance with the applicable publications, of NEMA do not relieve the Contractor of compliance with other provisions of these specifications.

Switching Equipment; GA.

Proof of listing by UL sufficient to demonstrate that the ATS conform to the specified requirements except as otherwise specified. Modification to a former UL listed ATS model shall require written UL approval of the modification. A copy of the written UL approval for modifications shall be included with the certified test reports specified. In lieu of the proof of listing by UL, the Contractor may have identical tests required by UL 1008 and by NEMA ICS 2 performed by a nationally recognized independent testing laboratory. UL and NEMA or other certified test reports shall be included to demonstrate the sequence of laboratory testing and that the overload, endurance, and temperature rise tests were conducted in that specific sequence of tests. The certified test reports shall show the date, times and duration of the overload, endurance, and temperature tests, and that the unit under test was not de-energized during the test sequence. Other tests shall be conducted in the sequence shown in paragraph TESTING unless otherwise justified and approved. Certified test reports shall also be included to demonstrate compliance with the withstand rating specified or shown, and shall be accompanied by oscillographic traces of phase current and line-to-neutral voltages. These traces shall demonstrate that the main and neutral contacts did not separate and were not damaged during the withstand test. The certified test reports from the testing laboratory shall be signed by the person performing the test and an authorized representative of the testing laboratory. The report shall verify that the ATS was tested in accordance with procedures described in UL 1008, or as otherwise specified and are of the same model number and ampacity as the switches specified. The test report shall verify that the tested unit passed all tests without modification or repair during a test period of not more than 90 days. The 90-day period does not include the time required to perform additional testing necessary to demonstrate compliance with the withstand rating provisions of these specifications.

1.4 SERVICE CONDITIONS

ATS shall be suitable for satisfactory and prolonged performance under the following service conditions:

a. Altitude: 151 feet above mean sea level.

b. Relative Humidity: 80 percent maximum, continuous.
c. Temperature: 0 degrees F to 90 degrees F.
d. Seismic Zone: 2A.

1.5 OPERATION AND MAINTENANCE MANUALS

Six copies of switching equipment operating manual outlining the step-by-step procedures required for system startup, operation and shutdown shall be provided. The manuals shall include the manufacturer's name, model number, service manual, parts list, and brief description of all equipment and basic operating features. The manufacturer's spare parts data shall be included in the manuals and correlated with the respective item of equipment included as a component part of the switch assembly. Spare parts data shall include the recommended spare parts published by the manufacturer of the equipment. The source of supply and the current cost of recommended spare parts shall be indicated. Six complete copies of maintenance manual listing routine maintenance, possible breakdowns, repairs and troubleshooting guide shall be provided. The manuals shall include simplified wiring and control diagrams for the system as installed.

PART 2 PRODUCTS

2.1 AUTOMATIC TRANSFER SWITCH (ATS)

ATS shall be the electrically-operated type that is mechanically held in both operating positions. ATS shall be suitable for use in emergency systems described in NFPA 70. ATS shall be UL listed unless the Contractor retains a nationally recognized independent testing laboratory to conduct tests as specified in paragraph SUBMITTALS, and test reports are approved as being equivalent of test results and certified test reports as those determined and reported by UL. ATS shall be the electrically-operated contactor type which shall be manufactured and tested in accordance with applicable requirements of IEEE ANSI/IEEE C37.90.1, NEMA ICS 1, NEMA ICS 2, and UL 1008. ATS shall also conform to NFPA 110 except that the ATS shall not be equipped with either overload or fault current protective devices. ATS shall be designed and manufactured to prevent stops in an intermediate or neutral position during transfer by the use of electrical actuators and stored-energy mechanisms. ATS designed and manufactured to effect transfers by a walking-beam or a similar device to engage handles of circuit breakers to accomplish transfer between power sources are unacceptable. Each pole of the doublethrow ATS shall have separate arcing contacts of a nonwelding type with switch contacts installed to permit viewing of the contacts without disassembly of the ATS or removal of the entire contact enclosure, or component parts of the ATS. ATS shall be rated for continuous duty at the continuous current rating specified. All rating data shall be shown on detail drawings, and shall equal or exceed those specified. Switches shall be adequately rated for the application indicated, and shall have the following characteristics:

a. Voltage: 480/277 volts ac.
b. Number of Phases: Three.
c. Number of Wires: Four.
d. Frequency: 60 Hz.
e. Number of Switched Poles: Four.

f. Type of Load: Total system load shown.
g. Continuous Phase or Main Current Rating: Equal to or exceed the rating shown.
h. ATS Withstand Rating (Fault Current Availability Rating): Rated to withstand an available fault or short-circuit current of 100,000 amperes, RMS symmetrical, at a power factor between 0.0 and approximately 0.20, for a duration of 0.5 cycles at a maximum voltage of 480 ac.
i. Overload Rating: 100,000 amperes, RMS symmetrical.
j. Nonwelding of Contacts: Rated for nonwelding of contacts when used with the feeder overcurrent devices indicated on the drawings and with the available fault current specified herein.
k. Main and Neutral Contacts: Contacts shall have a silver composition and shall be protected by approved arcing contacts. Neutral contacts shall have the same continuous current rating as the main or phase contacts.

2.1.1 Override Time Delay

Time delay to override monitored source deviation shall be adjustable from 0.5 to 6 seconds and factory set at 1 second. The device shall detect and respond to a sustained voltage drop of 30 percent of nominal voltage between any two of the supply conductors and initiate transfer action to the emergency source and start the engine-driven generator set after the set time period. The pickup voltage shall be adjustable between 85 and 100 percent of nominal and factory set 90 percent. The dropout voltage shall be adjustable from 70 to 98 percent of the pickup value, and factory set at 70 percent of nominal voltage.

2.1.2 Transfer Time Delay

Time delay before transfer to the emergency power source shall be adjustable from 0 to 5 minutes and factory set at 0 minutes. The device shall monitor the frequency and voltage of the emergency power source and transfer when frequency and voltage is stabilized at or above 90 percent of rated values. The pickup voltage shall be adjustable from 85 to 100 percent of nominal, and factory set at 90 percent. The pickup frequency shall be adjustable from 90 to 100 percent of nominal and factory set at 90 percent.

2.1.3 Return Time Delay

Time delay before return transfer to the normal power source shall be adjustable from 0 to 30 minutes and factory set at 30 minutes. The time delay shall be automatically defeated upon loss or sustained undervoltage of the emergency power source, provided that the normal supply has been restored.

2.1.4 Auxiliary Contacts

Two normally open and two normally closed auxiliary switches shall operate when the transfer switch is connected to the normal power source, and two normally open and two normally closed switches shall operate when the transfer switch is connected to the emergency power source.

2.1.5 Supplemental Features

The ATS shall also be furnished with the following:

a. Engine start contact.
b. Alternate source monitor.
c. Test switch.
d. Close differential protection.
e. Time delay by-pass switch.
f. Manual return-to-normal switch.

2.1.6 Operator

A manual operator, conforming to the applicable provisions of UL 1008, shall be provided to permit manual operation of the ATS without opening the ATS enclosure, and incorporate features to prevent operation by other than authorized and qualified personnel. The ATS shall be designed for use of the manual operator under no load conditions in the usual instances, but with the capability of operation under load conditions when necessary.

2.1.7 Override Switch

The override switch shall by-pass automatic transfer controls so the transfer switch will transfer and remain connected to the emergency power source, regardless of the conditions of the normal power source. If the emergency source fails and the preferred source is available, the transfer switch shall automatically retransfer to the normal source.

2.1.8 Green Indicating Lights

A green indicating light shall supervise the normal power source and shall have a nameplate engraved NORMAL.

2.1.9 Red Indicating Lights

A red indicating light shall supervise the emergency power source and shall have a nameplate engraved EMERGENCY.

2.2 ENCLOSURE

ATS and accessories shall be in a free-standing, floor-mounted and ventilated NEMA ICS 6, Type 1, smooth sheet metal enclosure constructed in accordance with UL 1008. Gauge of the metal shall be not less than No. 14. Doors shall have suitable hinges, locking handle latch, and gasketed jambs. Enclosure shall be equipped with at least two approved size and type of grounding lugs for the purpose of grounding the enclosure using No. 2/0 AWG copper conductors to the facility ground system. Factory wiring within the enclosure and the Contractor's field wiring terminating within the enclosure shall comply with NFPA 70. If wiring is not color coded, wires shall be permanently tagged near the terminal at each end with the wire number shown on approved detail drawings. Terminal blocks shall conform to NEMA ICS 4. Terminal facilities shall be suitably arranged for entrance of external conductors from the bottom of the enclosure or from the top and

bottom, as shown. Main switch terminals, including the neutral terminal, shall be of the pressure type and suitable for the termination of the external copper conductors shown.

2.2.1 Construction

Enclosure shall be constructed for convenient removal and replacement of contacts, coils, springs and control devices from the front without the disconnection of external power conductors or the removal or disassembly of major components.

2.2.2 Finishing

Painting required for surfaces not otherwise specified and finish painting of items only primed at the factory shall be as specified in Section 09900 PAINTING, GENERAL.

2.3 TESTING

2.3.1 Laboratory Testing

Testing shall be completed on the ATS to be supplied under these specifications, or shall have been completed on a previous, randomly selected standard production ATS unit having the same model number and capacity as the ATS specified. Overload, endurance and temperature tests shall be conducted in that sequence and within the shortest practicable period of time on the same ATS without de-energization of that ATS under test. The test sequence for the ATS listed below shall be followed. No deviation will be granted that is less stringent. Approval will not be granted to deviate from the overload, endurance and temperature test sequence.

a. General
b. Normal Operation
c. Overvoltage
d. Undervoltage
e. Overload
f. Endurance
g. Temperature rise
h. Dielectric Voltage - Withstand
i. Contact Opening
j. Dielectric Voltage - Withstand (Repeated)
k. Withstand
l. Instrumentation and Calibration of High Capacity Circuits
m. Closings
n. Dielectric Voltage - Withstand (Repeated)
o. Strength of Insulating Base and Support

2.3.2 Factory Testing

In addition to other factory tests, each completely assembled ATS unit shall be subjected to dielectric and operational tests, and withstand tests.

2.3.2.1 Withstand Test in Excess of UL 1008 Requirements

The ATS shall be tested and rated to withstand an available fault or short-circuit current of 100,000 amperes, RMS symmetrical, at a power factor between 0.0 and approximately 0.20 for a duration of 0.5 cycles at a maximum voltage of 480 ac.

2.3.2.2 Dielectric Tests

Tests shall be performed in accordance with NEMA ICS 1. Wiring of each control panel shall be subjected to voltage surge tests as stipulated in IEEE ANSI/IEEE C37.90.1. Impulse withstand rating tests shall be performed accordance with the requirements of NEMA ICS 1.

2.3.2.3 Operational Tests

Tests shall be performed and shall demonstrate that the operational sequence of each ATS unit conforms to the requirements of the specifications with regard to operating transfer time, voltage, frequency, and timing intervals.

PART 3 EXECUTION

3.1 INSTALLATION

The ATS shall be installed as indicated and in accordance with approved manufacturer's instructions.

3.2 OPERATIONAL TESTING

Following completion of the installation of the ATS , the Contractor shall perform operational tests in accordance with the written instructions of the manufacturer after having made proper adjustments and settings to demonstrate that the ATS functions satisfactorily and as specified. The Contractor shall advise the Contracting Officer not less than 5 work days prior to the scheduled date or dates for operational testing, and shall provide certified field test reports to the Contracting Officer within 2 calendar weeks following successful completion of the operational tests. The test reports shall describe all adjustments and settings made and all operational tests performed.

-- End of Section --

SECTION 16415

ELECTRICAL WORK, INTERIOR

PART 1 GENERAL

1.1 REFERENCES

The publications listed below form a part of this specification to the extent referenced. The publications are referred to in the text by basic designation only.

AMERICAN NATIONAL STANDARDS INSTITUTE (ANSI)

ANSI C39.1	(1981; R 1992) Requirements for Electrical Analog Indicating Instruments
ANSI C82.1	(1985; C82.1a; C82.1b; C82.1c; C82.1d; C82.1e; R 1992) Specifications for Fluorescent Lamp Ballasts
ANSI C82.4	(1992) Ballasts for High-Intensity-Discharge and Low-Pressure Sodium Lamps (Multiple-Supply Type)

AMERICAN SOCIETY FOR TESTING AND MATERIALS (ASTM)

ASTM B 1	(1995) Hard-Drawn Copper Wire
ASTM B 8	(1995) Concentric-Lay-Stranded Copper Conductors, Hard, Medium-Hard, or Soft
ASTM D 709	(1992; R 1997) Laminated Thermosetting Materials

CODE OF FEDERAL REGULATIONS (CFR)

47 CFR 18	Industrial, Scientific, and Medical Equipment

INSTITUTE OF ELECTRICAL AND ELECTRONICS ENGINEERS (IEEE)

IEEE ANSI/IEEE C37.20.1	(1993) Metal-Enclosed Low-Voltage Power Circuit-Breaker Switchgear
IEEE C62.41	(1991; R 1995) Surge Voltages in Low-Voltage AC Power Circuits
IEEE Std 81	(1983) Guide for Measuring Earth Resistivity, Ground Impedance, and Earth Surface Potentials of a Ground System

(Part 1)

IEEE Std 242	(1986; R 1991) Recommended Practice for Protection and Coordination of Industrial and Commercial Power Systems
IEEE Std 399	(1990) Recommended Practice for Industrial and Commercial Power Systems Analysis

NATIONAL ELECTRICAL MANUFACTURERS ASSOCIATION (NEMA)

NEMA 250	(1991) Enclosures for Electrical Equipment (1000 Volts Maximum)
NEMA AB 1	(1993) Molded Case Circuit Breakers and Molded Case Switches
NEMA ICS 1	(1993) Industrial Control and Systems
NEMA ICS 2	(1993) Industrial Control and Systems Controllers, Contactors, and Overload Relays Rated Not More Than 2,000 Volts AC or 750 Volts DC
NEMA ICS 3	(1993) Industrial Control and Systems Factory Built Assemblies
NEMA ICS 6	(1993) Industrial Control and Systems Enclosures
NEMA LE 4	(1987) Recessed Luminaires, Ceiling Compatibility
NEMA MG 1	(1993; Rev 1; Rev 2; Rev 3) Motors and Generators
NEMA MG 10	(1994) Energy Management Guide for Selection and Use of Polyphase Motors
NEMA OS 1	(1989) Sheet-Steel Outlet Boxes, Device Boxes, Covers, and Box Supports
NEMA OS 2	(1986; Errata Aug 1986; R 1991) Nonmetallic Outlet Boxes, Device Boxes, Covers and Box Supports
NEMA PB 1	(1990) Panelboards
NEMA PB 2	(1995) Deadfront Distribution Switchboards
NEMA RN 1	(1989) Polyvinyl-Chloride (PVC) Externally Coated Galvanized Rigid Steel Conduit and Intermediate Metal Conduit

NEMA ST 20	(1992) Dry-Type Transformers for General Applications
NEMA TC 2	(1990) Electrical Polyvinyl Chloride (PVC) Tubing (EPT) and Conduit (EPC-40 and EPC-80)
NEMA WD 1	(1983; R 1989) General Requirements for Wiring Devices
NEMA WD 6	(1988) Wiring Devices - Dimensional Requirements

NATIONAL FIRE PROTECTION ASSOCIATION (NFPA)

NFPA 70	(1999) National Electrical Code
NFPA 101	(1997; Errata 97-1) Life Safety Code

UNDERWRITERS LABORATORIES (UL)

UL 1	(1993; Rev thru Jan 1995) Flexible Metal Conduit
UL 5	(1996) Surface Metal Raceways and Fittings
UL 6	(1997) Rigid Metal Conduit
UL 20	(1995; Rev thru Jan 1998) General-Use Snap Switches
UL 50	(1995; Rev thru Oct 1997) Enclosures for Electrical Equipment
UL 67	(1993; Rev thru Nov 1995) Panelboards
UL 83	(1996; Rev Sep 1997) Thermoplastic-Insulated Wires and Cables
UL 98	(1994; R thru Oct 1995) Enclosed and Dead-Front Switches
UL 360	(1996; Rev thru Oct 1997) Liquid-Tight Flexible Steel Conduit
UL 467	(1993; Rev thru Aug 1996) Grounding and Bonding Equipment
UL 486A	(1997) Wire Connectors and Soldering Lugs for Use with Copper Conductors
UL 486C	(1997) Splicing Wire Connectors
UL 486E	(1994; Rev thru Feb 1997) Equipment Wiring

	Terminals for Use with Aluminum and/or Copper Conductors
UL 489	(1996; Rev thru Nov 1997) Molded-Case Circuit Breakers, Molded-Case Switches, and Circuit-Breaker Enclosures
UL 498	(1996; Rev thru Nov 1997) Attachment Plugs and Receptacles
UL 506	(1994; Rev Oct 1997) Specialty Transformers
UL 508	(1993; Rev thru Oct 1997) Industrial Control Equipment
UL 510	(1994; Rev thru Nov 1997) Insulating Tape
UL 514A	(1996) Metallic Outlet Boxes
UL 514B	(1997) Fittings for Conduit and Outlet Boxes
UL 514C	(1996) Nonmetallic Outlet Boxes, Flush-Device Boxes, and Covers
UL 542	(1994; Rev May 1997) Lampholders, Starters, and Starter Holders for Fluorescent Lamps
UL 651	(1995; Rev thru Apr 1997) Schedule 40 and 80 Rigid PVC Conduit
UL 651A	(1995; Rev Sep 1996) Type EB and A Rigid PVC Conduit and HDPE Conduit
UL 797	(1993; Rev thru Mar 1997) Electrical Metallic Tubing
UL 817	(1994; Rev thru Aug 1997) Cord Sets and Power-Supply Cords
UL 845	(1995; Rev Feb 1996) Motor Control Centers
UL 869A	(1993; Rev thru Apr 1996) Reference Standard for Service Equipment
UL 891	(1994; Rev thru Jan 1995) Dead-Front Switchboards
UL 924	(1995; Rev thru Oct 97) Emergency Lighting and Power Equipment
UL 935	(1995; Rev thru Apr 1997)Fluorescent-Lamp Ballasts

UL 943	(1993; Rev thru Mar 1997)Ground-Fault Circuit-Interrupters
UL 1004	(1994; Rev thru Feb 1997) Electric Motors
UL 1029	(1994; Rev thru Sep 1995) High-Intensity-Discharge Lamp Ballasts
UL 1242	(1996; Rev Apr 1997) Intermediate Metal Conduit
UL 1570	(1995; Rev thru Jun 1997) Fluorescent Lighting Fixtures
UL 1571	(1995; Rev thru Jun 97) Incandescent Lighting Fixtures
UL 1572	(1995; Rev thru Jun 97) High Intensity Discharge Lighting Fixtures
UL 1660	(1994; Rev Jan 1996) Liquid-Tight Flexible Nonmetallic Conduit
UL Elec Const Dir	(1997) Electrical Construction Equipment Directory

1.2 GENERAL

1.2.1 Rules

The installation shall conform to the requirements of NFPA 70 and NFPA 101, unless more stringent requirements are indicated or shown.

1.2.2 Coordination

The drawings indicate the extent and the general location and arrangement of equipment, conduit, and wiring. The Contractor shall become familiar with all details of the work and verify all dimensions in the field so that the outlets and equipment shall be properly located and readily accessible. Lighting fixtures, outlets, and other equipment and materials shall be located to avoid interference with mechanical or structural features; otherwise, lighting fixtures shall be symmetrically located according to the room arrangement when uniform illumination is required, or asymmetrically located to suit conditions fixed by design and shown. Raceways, junction and outlet boxes, and lighting fixtures shall not be supported from sheet metal roof decks. If any conflicts occur necessitating departures from the drawings, details of and reasons for departures shall be submitted and approved prior to implementing any change. The Contractor shall coordinate electrical work with the HVAC and electrical drawings and specifications and provide power related wiring.

1.2.3 Special Environments

1.2.3.1 Weatherproof Locations

Wiring, Fixtures, and equipment in designated locations shall conform to NFPA 70 requirements for installation in damp or wet locations.

1.2.3.2 Ducts, Plenums and Other Air-Handling Spaces

Wiring and equipment in ducts, plenums and other air-handling spaces shall be installed using materials and methods in conformance with NFPA 70unless more stringent requirements are indicated in this specification or on the contract drawings.

1.2.4 Standard Products

Material and equipment shall be a standard product of a manufacturer regularly engaged in the manufacture of the product and shall essentially duplicate items that have been in satisfactory use for at least 2 years prior to bid opening.

1.2.5 NAMEPLATES

1.2.5.1 Identification Nameplates

Major items of electrical equipment and major components shall be permanently marked with an identification name to identify the equipment by type or function and specific unit number as indicated. Designation of motors shall coincide with their designation in the motor control center or panel. Unless otherwise specified, identification nameplates shall be made of laminated plastic in accordance with ASTM D 709 with black outer layers and a white core. Edges shall be chamfered. Plates shall be fastened with black-finished round-head drive screws, except motors, or approved nonadhesive metal fasteners. When the nameplate is to be installed on an irregular-shaped object, the Contractor shall devise an approved support suitable for the application and ensure the proper installation of the supports and nameplates. In all instances, the nameplate shall be installed in a conspicuous location. At the option of the Contractor, the equipment manufacturer's standard embossed nameplate material with black paint-filled letters may be furnished in lieu of laminated plastic. The front of each panelboard, motor control center, switchgear, and switchboard shall have a nameplate to indicate the phase letter, corresponding color and arrangement of the phase conductors. The following equipment, as a minimum, shall be provided with identification nameplates:

Minimum 1/4 inch High Letters	Minimum 1/8 inch High Letters
Panelboards	Control Power Transformers
Starters	Control Devices
Safety Switches	Instrument Transformers
Motor Control Centers	
Transformers	
Equipment Enclosures	
Switchgear	
Switchboards	

Minimum 1/4 inch High Letters	Minimum 1/8 inch High Letters
Motors	

Each panel, section, or unit in motor control centers, switchgear or similar assemblies shall be provided with a nameplate in addition to nameplates listed above, which shall be provided for individual compartments in the respective assembly, including nameplates which identify "future," "spare," and "dedicated" or "equipped spaces", and "source of power and loads fed".

1.2.6 As-Built Drawings

Following the project completion or turnover, within 30 days the Contractor shall furnish 2 sets of as-built drawings to the Contracting Officer.

1.2.7 Recessed Light Fixtures (RLF) Option

The Contractor has the option to substitute inch-pound (I-P) RLF to metric RLF. This option shall be coordinated with Section \=09510=\ ACOUSTICAL CEILINGS.

1.3 SUBMITTALS

Government approval is required for submittals with a "GA" designation; submittals having an "FIO" designation are for information only. The following shall be submitted in accordance with Section 01330 SUBMITTAL PROCEDURES:

SD-01 Data

Fault Current and Protective Device Coordination Study; GA.

The study shall be submitted along with protective device equipment submittals. No time extensions or similar contract modifications will be granted for work arising out of the requirements for this study. Approval of protective devices proposed shall be based on recommendations of this study, The Government shall not be held responsible for any changes to equipment, device ratings, settings, or additional labor for installation of equipment or devices ordered and/or procured prior to approval of the study.

Manufacturer's Catalog; GA.

Data composed of catalog cuts, brochures, circulars, specifications, product data, and printed information in sufficient detail and scope to verify compliance with the requirements of the contract documents.

Material, Equipment, and Fixture Lists; GA.

A complete itemized listing of equipment and materials proposed for incorporation into the work. Each entry shall include an item number, the quantity of items proposed, and the name of the manufacturer of each item.

Installation Procedures; FIO.

Installation procedures for rotating equipment, transformers, switchgear, battery systems, voltage regulators, and grounding resistors. Procedures shall include diagrams, instructions, and precautions required to install, adjust, calibrate, and test devices and equipment.

SD-04 Drawings

Interior Electrical Equipment; GA.

Detail drawings consisting of equipment drawings, illustrations, schedules, instructions, diagrams, and other information necessary to define the installation. Detail drawings shall show the rating of items and systems and how the components of an item and system are assembled, function together, and how they will be installed on the project. Data and drawings for component parts of an item or system shall be coordinated and submitted as a unit. Data and drawings shall be coordinated and included in a single submission. Multiple submissions for the same equipment or system are not acceptable except where prior approval has been obtained from the Contracting Officer. In such cases, a list of data to be submitted later shall be included with the first submission. Detail drawings shall show physical arrangement, construction details, connections, finishes, materials used in fabrication, provisions for conduit or busway entrance, access requirements for installation and maintenance, physical size, electrical characteristics, foundation and support details, and equipment weight. Drawings shall be drawn to scale and/or dimensioned. Optional items shall be clearly identified as included or excluded. Detail drawings shall as a minimum include:

a. Transformers.
b. Switchgear.
c. Grounding resistors.
d. Motors and rotating machinery.
e. Motor control centers.
f. Single line electrical diagrams including primary, metering, sensing and relaying, control wiring, and control logic.
g. Sway bracing for suspended luminaires.

Structural drawings showing the structural or physical features of major equipment items, components, assemblies, and structures, including foundations or other types of supports for equipment and conductors. These drawings shall include accurately scaled or dimensioned outline and arrangement or layout drawings to show the physical size of equipment and components and the relative arrangement and physical connection of related components. Weights of equipment, components and assemblies shall be provided when required to verify the adequacy of design and proposed construction of foundations or other types of supports. Dynamic forces shall be stated for switching devices when such forces must be considered in the design of support structures. The appropriate detail drawings shall show the provisions for leveling, anchoring, and connecting all items during installation, and shall include any recommendations made by the manufacturer.

Electrical drawings including single-line and three-line diagrams, and schematics or elementary diagrams of each electrical system; internal wiring and field connection diagrams of each electrical device when published by the manufacturer; wiring diagrams of cabinets, panels, units, or separate mountings; interconnection diagrams that show the wiring between separate components of assemblies; field connection diagrams that show the termination of wiring routed between separate items of equipment; internal wiring diagrams of equipment showing wiring as actually provided for this project. Field wiring connections shall be clearly identified.

If departures from the contract drawings are deemed necessary by the Contractor, complete details of such departures, including changes in related portions of the project and the reasons why, shall be submitted with the detail drawings. Approved departures shall be made at no additional cost to the Government.

As-Built Drawings; GA.

The as-built drawings shall be a record of the construction as installed. The drawings shall include all the information shown on the contract drawings, deviations, modifications, and changes from the contract drawings, however minor. The as-built drawings shall be kept at the job site and updated daily. The as-built drawings shall be a full-sized set of prints marked to reflect all deviations, changes, and modifications. The as-built drawings shall be complete and show the location, size, dimensions, part identification, and other information. Additional sheets may be added. The as-built drawings shall be jointly inspected for accuracy and completeness by the Contractor's quality control representative and by the Contracting Officer prior to the submission of each monthly pay estimate. Upon completion of the work, the Contractor shall submit three full sized sets of the marked prints to the Contracting Officer for approval. If upon review, the as-built drawings are found to contain errors and/or omissions, they will be returned to the Contractor for correction. The Contractor shall correct and return the as-built drawings to the Contracting Officer for approval within ten calendar days from the time the drawings are returned to the Contractor.

SD-08 Statements

Onsite Test; GA.

A detailed description of the Contractor's proposed procedures for on-site tests.

SD-09 Reports

Factory Test Reports; GA.

Six copies of the information described below in 8 1/2 x 11 inch binders having a minimum of 5 rings from which material may readily be removed and replaced, including a separate section for each test. Sections shall be separated by heavy plastic dividers with tabs.

a. A list of equipment used, with calibration certifications.
b. A copy of measurements taken.
c. The dates of testing.
d. The equipment and values to be verified.
e. The conditions specified for the test.
f. The test results, signed and dated.
g. A description of adjustments made.

Field Test Plan; GA.

A detailed description of the Contractor's proposed procedures for onsite test submitted 20 days prior to testing the installed system. No field test will be performed until the test plan is approved. The test plan shall consist of complete field test procedures including tests to be performed, test equipment required, and tolerance limits.

Field Test Reports; GA.

Six copies of the information described below in 8 1/2 x 11 inch binders having a minimum of 5 rings from which material may readily be removed and replaced, including a separate section for each test. Sections shall be separated by heavy plastic dividers with tabs.

a. A list of equipment used, with calibration certifications.
b. A copy of measurements taken.
c. The dates of testing.
d. The equipment and values to be verified.
e. The conditions specified for the test.
f. The test results, signed and dated.
g. A description of adjustments made.
h. Final position of controls and device settings.

SD-13 Certificates

Materials and Equipment; GA.

The label or listing of the Underwriters Laboratories, Inc., will be accepted as evidence that the materials or equipment conform to the applicable standards of that agency. In lieu of this label or listing, a statement from a nationally recognized, adequately equipped testing agency indicating that the items have been tested in accordance with required procedures and that the materials and equipment comply with all contract requirements will be accepted. Items which are required to be listed and labeled in accordance with Underwriters Laboratories must be affixed with a UL label that states that it is UL listed. No exceptions or waivers will be granted to this requirement. Materials and equipment will be approved based on the manufacturer's published data.

For other than equipment and materials specified to conform to UL publications, a manufacturer's statement indicating complete compliance with the applicable standard of the American Society for Testing and Materials, National Electrical Manufacturers Association, or other commercial standard, is acceptable.

1.4 WORKMANSHIP

Materials and equipment shall be installed in accordance with NFPA 70, recommendations of the manufacturer, and as shown.

PART 2 PRODUCTS

Products shall conform to the respective publications and other requirements specified below. Materials and equipment not listed below shall be as specified elsewhere in this section. Items of the same classification shall be identical including equipment, assemblies, parts, and components.

2.1 CABLES AND WIRES

Conductors No. 8 AWG and larger diameter shall be stranded. Conductors No. 10 AWG and smaller diameter shall be solid, except that conductors for remote control, alarm, and signal circuits, classes 1, 2, and 3, shall be stranded unless specifically indicated otherwise. Conductor sizes and ampacities shown are based on copper, unless indicated otherwise. All conductors shall be copper.

2.1.1 Equipment Manufacturer Requirements

When manufacturer's equipment requires copper conductors at the terminations or requires copper conductors to be provided between components of equipment, provide copper conductors or splices, splice boxes, and other work required to meet manufacturer's requirements.

2.1.2 Aluminum Conductors

Aluminum conductors shall not be used.

2.1.3 Insulation

Unless indicated otherwise, or required by NFPA 70, power and lighting wires shall be 600-volt, Type THWN, THHN, or THW conforming toUL 83, except that grounding wire may be type TW conforming to UL 83; remote-control and signal circuits shall be Type TW, THW or TF, conforming to UL 83. Where lighting fixtures require 90-degree Centigrade (C) conductors, provide only conductors with 90-degree C insulation or better.

2.1.4 Bonding Conductors

ASTM B 1, solid bare copper wire for sizes No. 8 AWG and smaller diameter; ASTM B 8, Class B, stranded bare copper wire for sizes No. 6 AWG and larger diameter.

2.1.5 Mineral-Insulated, Metal-Sheathed Cable

UL listed NFPA 70, type MI cable. Sheathing containing asbestos fibers shall not be used.

2.1.6 Cord Sets and Power-Supply Cords

UL 817.

2.2 CIRCUIT BREAKERS

2.2.1 MOLDED-CASE CIRCUIT BREAKERS

Molded-case circuit breakers shall conform to NEMA AB 1 and UL 489. Circuit breakers may be installed in panelboards, switchboards, enclosures, motor control centers, or combination motor controllers.

2.2.1.1 Construction

Circuit breakers shall be suitable for mounting and operating in any position. Lug shall be listed for copper conductors only in accordance with UL 486E. Single-pole circuit breakers shall be full module size with not more than one pole per module. Multi-pole circuit breakers shall be of the common-trip type having a single operating handle such that an overload or short circuit on any one pole will result in all poles opening simultaneously. Sizes of 100 amperes or less may consist of single-pole breakers permanently factory assembled into a multi-pole unit having an internal, mechanical, nontamperable common-trip mechanism and external handle ties. All circuit breakers shall have a quick-make, quick-break overcenter toggle-type mechanism, and the handle mechanism shall be trip-free to prevent holding the contacts closed against a short-circuit or sustained overload. All circuit breaker handles shall assume a position between "ON" and "OFF" when tripped automatically. All ratings shall be clearly visible.

2.2.1.2 Ratings

Voltage ratings shall be not less than the applicable circuit voltage. The interrupting rating of the circuit breakers shall be at least equal to the available short-circuit current at the line terminals of the circuit breaker and correspond to the UL listed integrated short-circuit current rating specified for the panelboards and switchboards. Molded-case circuit breakers shall have nominal voltage ratings, maximum continuous-current ratings, and maximum short-circuit interrupting ratings in accordance with NEMA AB 1. Ratings shall be coordinated with system X/R ratio.

2.2.1.3 Cascade System Ratings

Circuit breakers used in series combinations shall be in accordance with UL 489. Equipment, such as switchboards and panelboards, which house series-connected circuit breakers shall be clearly marked accordingly. Series combinations shall be listed in the UL Recognized Component Directory under "Circuit Breakers-Series Connected."

2.2.1.4 Thermal-Magnetic Trip Elements

Thermal magnetic circuit breakers shall be provided as shown. Automatic operation shall be obtained by means of thermal-magnetic tripping devices located in each pole providing inverse time delay and instantaneous circuit protection. The instantaneous magnetic trip shall be adjustable and

accessible from the front of all circuit breakers on frame sizes above 150 amperes.

2.2.2 Solid-State Trip Elements

Solid-state circuit breakers shall be provided as shown. All electronics shall be self-contained and require no external relaying, power supply, or accessories. Printed circuit cards shall be treated to resist moisture absorption, fungus growth, and signal leakage. All electronics shall be housed in an enclosure which provides protection against arcs, magnetic interference, dust, and other contaminants. Solid-state sensing shall measure true RMS current with error less than one percent on systems with distortions through the 13th harmonic. Peak or average actuating devices are not acceptable. Current sensors shall be torodial construction, encased in a plastic housing filled with epoxy to protect against damage and moisture and shall be integrally mounted on the breaker. Where indicated on the drawings, circuit breaker frames shall be rated for 100 percent continuous duty. Circuit breakers shall have tripping features as shown on the drawings and as described below:

a. Long-time current pick-up, adjustable from 50 percent to 100 percent of continuous current rating.
b. Adjustable long-time delay.
c. Short-time current pick-up, adjustable from 1.5 to 9 times long-time current setting.
d. Adjustable short-time delay.
e. Short-time I square times t switch.
f. Instantaneous current pick-up, adjustable from 1.5 to 9 times long-time current setting.
g. Ground-fault pick-up, adjustable from 20 percent to 60 percent of sensor rating, but not greater than 1200 amperes. Sensing of ground-fault current at the main bonding jumper or ground strap will not be permitted.
h. Adjustable ground-fault delay.
i. Overload and short-time and ground-fault trip indicators shall be provided.

2.2.3 SWD Circuit Breakers

Circuit breakers rated 20 amperes and intended to switch 277 volts or less fluorescent lighting loads shall be marked "SWD."

2.2.4 HACR Circuit Breakers

Circuit breakers 60 amperes or below, 240 volts, 1-pole or 2-pole, intended to protect multi-motor and combination-load installations involved in heating, air conditioning, and refrigerating equipment shall be marked "Listed HACR Type."

2.2.5 Ground Fault Circuit Interrupters

UL 943. Breakers equipped with ground fault circuit interrupters shall have ground fault class, interrupting capacity, and voltage and current ratings as indicated.

2.3 MOTOR SHORT-CIRCUIT PROTECTOR (MSCP)

Motor short-circuit protectors shall conform to UL 508 and shall be provided as shown. Protectors shall be used only as part of a combination motor controller which provides coordinated motor branch-circuit overload and short-circuit protection, and shall be rated in accordance with the requirements of NFPA 70.

2.3.1 Construction

Motor short-circuit protector bodies shall be constructed of high temperature, dimensionally stable, long life, nonhygroscopic materials. Protectors shall fit special MSCP mounting clips and shall not be interchangeable with any commercially available fuses. Protectors shall have 100 percent one-way interchangeability within the A-Y letter designations. All ratings shall be clearly visible.

2.3.2 Ratings

Voltage ratings shall be not less than the applicable circuit voltage. Letter designations shall be A through Y for motor controller Sizes 0, 1, 2, 3, 4, and 5, with 100,000 amperes interrupting capacity rating. Letter designations shall correspond to controller sizes as follows:

CONTROLLER SIZE	MSCP DESIGNATION
NEMA O	A-N
NEMA 1	A-P
NEMA 2	A-S
NEMA 3	A-U
NEMA 4	A-W
NEMA 5	A-Y

2.4 CONDUIT AND TUBING

2.4.1 Electrical, Zinc-Coated Steel Metallic Tubing (EMT)

UL 797

2.4.2 Flexible Conduit, Steel and Plastic

General-purpose type, UL 1; liquid tight, UL 360, and UL 1660.

2.4.3 Intermediate Metal Conduit

UL 1242.

2.4.4 Rigid Metal Conduit

UL 6.

2.4.5 Rigid Plastic

NEMA TC 2, UL 651 and UL 651A.

2.4.6 Surface Metal Electrical Raceways and Fittings

UL 5.

2.5 CONDUIT AND DEVICE BOXES AND FITTINGS

2.5.1 Boxes, Metallic Outlet

NEMA OS 1 and UL 514C.

2.5.2 Boxes, Nonmetallic, Outlet and Flush-Device Boxes and Covers

NEMA OS 2 and UL 514C.

2.5.3 Boxes, Switch (Enclosed), Surface-Mounted

UL 98.

2.5.4 Fittings for Conduit and Outlet Boxes

UL 514B.

2.5.5 Fittings, PVC, for Use with Rigid PVC Conduit and Tubing

UL 514B.

2.6 CONDUIT COATINGS PLASTIC RESIN SYSTEM

NEMA RN 1, Type A-40.

2.7 CONNECTORS, WIRE PRESSURE

2.7.1 For Use With Copper Conductors

UL 486A.

2.8 ELECTRICAL GROUNDING AND BONDING EQUIPMENT

UL 467.

2.8.1 Ground Rods

Ground rods shall be of copper-clad steel conforming to UL 467 not less than 3/4 inch in diameter by 10 feet in length of the sectional type driven full length into the earth.

2.8.2 Ground Bus

The ground bus shall be bare conductor or flat copper in one piece, if practicable.

2.9 ENCLOSURES

NEMA ICS 6 or NEMA 250 unless otherwise specified.

2.9.1 Cabinets and Boxes

Cabinets and boxes with volume greater than 100 cubic inches shall be in accordance with UL 50, hot-dip, zinc-coated, if sheet steel.

2.9.2 Circuit Breaker Enclosures

UL 489.

2.10 FIXTURES, LIGHTING AND FIXTURE ACCESSORIES/COMPONENTS

Fixtures, accessories and components, including ballasts, lampholders, lamps, starters and starter holders, shall conform to industry standards specified below.

2.10.1 Fixture, Auxiliary or Emergency

UL 924.

2.10.2 Incandescent Fixture

NEMA LE 4 for ceiling compatibility of recessed fixtures and UL 1571.

2.10.3 Fluorescent

a. Fixture: NEMA LE 4 for ceiling compatibility of recessed fixtures and UL 1570. Fixtures shall be plainly marked for proper lamp and ballast type to identify lamp diameter, wattage, color and start type. Marking shall be readily visible to service personnel, but not visible from normal viewing angles.

b. Ballasts:

(1) Magnetic ballast, energy-saving, high power factor, Class P, automatic-resetting Type, approved for the application by the Certified Ballast Manufacturers: ANSI C82.1 and UL 935. Two-lamp ballasts shall be used for each pair of lamps within a fixture or within continuous mounted fixtures. Single-lamp ballasts shall be used for individually mounted single-lamp fixtures and where an odd single-lamp fixture occurs at the end of a continuous group. Magnetic fluorescent lamp ballasts shall have a Ballast Efficacy Factor (BEF) not less than shown in the following table:

MAGNETIC FLUORESCENT BALLAST EFFICACY FACTORS*

Design starting temperature above 40 degrees F with 60 Hz input frequency

NUMBER OF LAMPS	LAMP TYPE	NOMINAL OPERATIONAL INPUT VOLTAGE	MAX. LAMP OPERATING CURRENT	MIN. BALLAST EFFICACY FACTOR
1	4 ft rapid start	120 or 277	less than 1000 m amp	1.805
2	4 ft rapid start	120	less than 1000 m amp	1.060
2	4 ft rapid start	277	less than 1000 m amp	1.050
2	8 ft slim-line	120 - 277	less than 1000 m amp	0.570
2	8 ft high output, rapid start	120 - 277	less than 1000 m amp	0.390

* For ballasts not specifically designed for use with dimming controls

The BEF is calculated using the formula:

BEF = Ballast Factor, (in percent) / Power Input

Where Power Input = Total Wattage of Combined Lamps and Ballasts.

(2) Electronic Ballast. Electronic ballasts shall consist of a rectifier, high frequency inverter, and power control and regulation circuitry. The ballasts shall be UL listed, Class P, with a Class A sound rating and shall contain no PCBs. Ballasts shall meet 47 CFR 18 for electromagnetic interference and shall not interfere with the operation of other electrical equipment. Design shall withstand line transients per IEEE C62.41, Category A. Unless otherwise indicated, the minimum number of ballasts shall be used to serve each individual fixture, using one, two, three or four lamp ballasts. A single ballast may be used to serve multiple fixtures if they are continuous mounted, factory manufactured for that installation with an integral wireway, and are identically controlled.

(a) Light output regulation shall be +/- 10%.

(b) Voltage input regulation shall be +/- 10%.

(c) Lamp current crest factor shall be no more than 1.6.

(d) Ballast factor shall be not less than 85% nor more than 100%, unless otherwise indicated.

(e) A 60 Hz filter shall be provided. Flicker shall be no more than 10% with any lamp suitable for the ballast.

(f) Ballast case temperature shall not exceed 25 degree Celsius rise above 40 degree Celsius ambient, when tested in accordance with UL 935.

(g) Total harmonic distortion shall be in the range of 10-20%.

(h) Power factor shall not be less than 0.95.

(i) Ballasts shall operate at a frequency of 20 kHz or more.

(j) Operating filament voltage shall be 2.5 to 4.5 volts.

(k) Warranty. Three year full warranty including a $10 labor allowance.

(l) Ballast Efficacy Factor (BEF) shall be in accordance with the following table. Ballasts and lamps shall be matching rapid start or instant start as indicated on the following table. If 32W-F32-T8 lamps and ballasts are used, they must be either all rapid start or all instant start.

ELECTRONIC FLUORESCENT BALLAST EFFICACY FACTORS*

LAMP TYPE	TYPE OF STARTER & LAMP	NOMINAL OPERATIONAL INPUT VOLTAGE	NUMBER OF LAMPS	MIN. BALLAST EFFICACY FACTOR
40W F40 T12	rapid start	120 or 277 V	1	2.3
			2	1.2
			3	0.8
			4	0.6
34W F40 T12	rapid start	120 or 277 V	1	2.6
			2	1.3
			3	1.0
			4	0.7
40W F40 T10	rapid start	120 or 277 V	1	2.2
			2	1.1
			3	0.8

ELECTRONIC FLUORESCENT BALLAST EFFICACY FACTORS*

LAMP TYPE	TYPE OF STARTER & LAMP	NOMINAL OPERATIONAL INPUT VOLTAGE	NUMBER OF LAMPS	MIN. BALLAST EFFICACY FACTOR
32W F32 T8	rapid or instant start	120 or 277 V	1	2.4
			2	1.4
			3	1.0
			4	0.8

*For ballasts not specifically designed for use with dimming controls

The BEF is calculated using the formula:

BEF = Ballast Factor (in percent) / Power Input

Where Power Input = Total Wattage of Combined Lamps and Ballasts.

c. Lampholders, Starters, and Starter Holders: UL 542.

2.10.4 High-Intensity-Discharge

a. Fixture: NEMA LE 4 for ceiling compatibility of recessed fixtures and UL 1572.

b. Ballasts: ANSI C82.4 for multiple supply types and UL 1029.

2.11 INSTRUMENTS, ELECTRICAL INDICATING

ANSI C39.1.

2.12 MOTORS, AC, FRACTIONAL AND INTEGRAL

Motors, ac, fractional and integral horsepower, 500 hp and smaller shall conform to NEMA MG 1 and UL 1004for motors; NEMA MG 10 for energy management selection of polyphase motors.

2.12.1 Rating

The horsepower rating of motors should be limited to no more than 125 percent of the maximum load being served unless a NEMA standard size does not fall within this range. In this case, the next larger NEMA standard motor size should be used.

2.12.2 Motor Efficiencies

All permanently wired polyphase motors of 1 hp or more shall meet the minimum full-load efficiencies as indicated in the following table, and as specified in this specification. Motors of 1 hp or more with open, drip proof or totally enclosed fan cooled enclosures shall be high efficiency type, unless otherwise indicated. Motors provided as an integral part of motor driven equipment are excluded from this requirement if a minimum

seasonal or overall efficiency requirement is indicated for that equipment by the provisions of another section.

Minimum Motor Efficiencies

HP	Std. Efficiency	High Efficiency
1	77.0	85.5
1.5	78.5	85.5
2	78.5	85.5
3	78.5	88.5
5	82.5	88.5
7.5	84.0	90.0
10	85.5	90.0
15	85.5	91.0
20	87.5	92.0
25	88.5	92.0
30	88.5	92.0
40	88.5	92.0
50	89.0	92.5
60	89.0	92.5
75	89.0	95.5
100	90.0	93.5
125	91.0	94.5
150	91.0	94.5
200	91.0	94.5
250	91.0	94.5
300	91.0	94.5
350	91.0	94.5
400	91.0	94.5
500	91.0	94.5

2.13 MOTOR CONTROLS AND MOTOR CONTROL CENTERS

2.13.1 General

NEMA ICS 1, NEMA ICS 2, NEMA ICS 3 and NEMA ICS 6, and UL 508 and UL 845. Panelboards supplying non-linear loads shall have neutrals sized for 200 percent of rated current.

2.13.2 Motor Starters

Combination starters shall be provided with circuit breakers.

2.13.2.1 Reduced-Voltage Starters

Reduced-voltage starters shall be provided for polyphase motors 100 hp or larger. Reduced-voltage starters shall be of the single-step autotransformer, reactor, or resistor type having an adjustable time interval between application of reduced and full voltages to the motors. Wye-delta reduced voltage starter or part winding increment starter having an adjustable time delay between application of voltage to first and second winding of motor may be used in lieu of the reduced voltage starters

specified above for starting of motor-generator sets, centrifugally operated equipment or reciprocating compressors provided with automatic unloaders.

2.13.3 Thermal-Overload Protection

Each motor of 1/8 hp or larger shall be provided with thermal-overload protection. Polyphase motors shall have overload protection in each ungrounded conductor. The overload-protection device shall be provided either integral with the motor or controller, or shall be mounted in a separate enclosure. Unless otherwise specified, the protective device shall be of the manually reset type. Single or double pole tumbler switches specifically designed for alternating-current operation only may be used as manual controllers for single-phase motors having a current rating not in excess of 80 percent of the switch rating.

2.13.4 Low-Voltage Motor Overload Relays

2.13.4.1 General

Thermal overload relays shall conform to NEMA ICS 2 and UL 508. Overload protection shall be provided either integral with the motor or motor controller, and shall be rated in accordance with the requirements of NFPA 70. Standard units shall be used for motor starting times up to 7 seconds. Slow units shall be used for motor starting times from 8 to 12 seconds. Quick trip units shall be used on hermetically sealed, submersible pumps, and similar motors.

2.13.4.2 Construction

Manual reset type thermal relay shall be bimetallic construction. Automatic reset type thermal relays shall be bimetallic construction. Magnetic current relays shall consist of a contact mechanism and a dash pot mounted on a common frame.

2.13.4.3 Ratings

Voltage ratings shall be not less than the applicable circuit voltage. Trip current ratings shall be established by selection of the replaceable overload device and shall not be adjustable. Where the controller is remotely-located or difficult to reach, an automatic reset, non-compensated overload relay shall be provided. Manual reset overload relays shall be provided otherwise, and at all locations where automatic starting is provided. Where the motor is located in a constant ambient temperature, and the thermal device is located in an ambient temperature that regularly varies by more than minus 18 degrees F, an ambient temperature-compensated overload relay shall be provided.

2.13.5 Automatic Control Devices

2.13.5.1 Direct Control

Automatic control devices (such as thermostats, float or pressure switches) which control the starting and stopping of motors directly shall be

designed for that purpose and have an adequate horsepower rating.

2.13.5.2 Pilot-Relay Control

Where the automatic-control device does not have such a rating, a magnetic starter shall be used, with the automatic-control device actuating the pilot-control circuit.

2.13.5.3 Manual/Automatic Selection

a. Where combination manual and automatic control is specified and the automatic-control device operates the motor directly, a double-throw, three-position tumbler or rotary switch (marked MANUAL-OFF-AUTOMATIC) shall be provided for the manual control.

b. Where combination manual and automatic control is specified and the automatic-control device actuates the pilot control circuit of a magnetic starter, the magnetic starter shall be provided with a three-position selector switch marked MANUAL-OFF-AUTOMATIC.

c. Connections to the selector switch shall be such that; only the normal automatic regulatory control devices will be bypassed when the switch is in the Manual position; all safety control devices, such as low-or high-pressure cutouts, high-temperature cutouts, and motor-overload protective devices, shall be connected in the motor-control circuit in both the Manual and the Automatic positions of the selector switch. Control circuit connections to any MANUAL-OFF-AUTOMATIC switch or to more than one automatic regulatory control device shall be made in accordance with wiring diagram approved by the Contracting Officer unless such diagram is included on the drawings. All controls shall be 120 volts or less unless otherwise indicated.

2.13.6 Motor Control Centers

Control centers shall conform to the requirements of NEMA ICS 1, NEMA ICS 2, NEMA ICS 3 and NEMA ICS 6, and UL 508 and UL 845. Control centers shall be indoor type and shall contain combination starters and other equipment as indicated. Control centers shall be NEMA ICS 2, Class 1, Type A. Each control center shall be mounted on floor sills or mounting channels. Each circuit shall have a suitable metal or laminated plastic nameplate with white cut letters. Motor control centers shall be provided with a full-length ground bus bar.

2.14 PANELBOARDS

Dead-front construction, NEMA PB 1 and UL 67.

2.15 RECEPTACLES

2.15.1 Heavy Duty Grade

NEMA WD 1. Devices shall conform to all requirements for heavy duty receptacles.

2.15.2 Standard Grade

UL 498.

2.15.3 Ground Fault Interrupters

UL 943, Class A or B.

2.15.4 NEMA Standard Receptacle Configurations

NEMA WD 6.

a. Single and Duplex, 15-Ampere and 20-Ampere, 125 Volt

15-ampere, non-locking: NEMA type 5-15R, locking: NEMA type L5-15R, 20-ampere, non-locking: NEMA type 5-20R, locking: NEMA type L5-20R.

b. 15-Ampere, 250 Volt

Two-pole, 3-wire grounding, non-locking: NEMA type 6-15R, locking: NEMA type L6-15R. Three-pole, 4-wire grounding, non-locking: NEMA type 15-15R, locking: NEMA type L15-15R.

c. 20-Ampere, 250 Volt

Two-pole, 3-wire grounding, non-locking: NEMA type 6-20R, locking: NEMA type L6-20R. Three-pole, 4-wire grounding, non-locking: NEMA type 15-20R, locking: NEMA type L15-20R.

d. 30-Ampere, 125/250 Volt

Three-pole, 3-wire, non-locking: NEMA type 10-30R, locking: NEMA type L10-30R. Three-pole, 4-wire grounding, non-locking: NEMA type 14-30R, locking: NEMA type L14-30R.

e. 30-Ampere, 250 Volt

Two-pole, 3-wire grounding, non-locking: NEMA type 6-30R, locking: NEMA type L6-30R. Three-pole, 4-wire grounding, non-locking: NEMA type 15-30R, locking: NEMA type L15-30R.

f. 50-Ampere, 125/250 Volt

Three-pole, 3-wire: NEMA type 10-50R. Three-pole, 4-wire grounding: NEMA type 14-50R.

g. 50-Ampere, 250 Volt

Two-pole, 3-wire grounding: NEMA type 6-50R. Three-pole, 4-wire grounding: NEMA type 15-50R.

2.16 Service Entrance Equipment

UL 869A.

2.17 SPLICE, CONDUCTOR

UL 486C.

2.18 POWER-SWITCHGEAR ASSEMBLIES INCLUDING SWITCHBOARDS

Assemblies shall be metal-enclosed, freestanding general-purpose type ventilated type in accordance with NEMA PB 2, UL 891, and IEEE ANSI/IEEE C37.20.1 and shall be installed to provide front and rear access. Busses shall be copper. Assembly shall be approximately 90 inches high; arrangement of circuit breakers and other items specified shall be as indicated. The withstand rating and interrupting capacity of the switchboard and circuit breakers shall be based on the maximum fault current available.

2.18.1 Circuit Breakers

Circuit breakers shall be stationary insulated-case, systems type circuit breakers.

2.18.2 Auxiliary Equipment

2.18.2.1 Instruments

Instruments shall be long scale, 6.8 inches minimum, semiflush rectangular, indicating or digital switchboard type, mounted at eye level.

a. Ammeter, range 0 to 3000 amperes, complete with selector switch having off position and positions to read each phase current.

b. Voltmeter, range 0 to 600 volts, complete with selector switch having off position and positions to read each phase to phase voltage.

2.19 SNAP SWITCHES

UL 20.

2.20 TAPES

2.20.1 Plastic Tape

UL 510.

2.20.2 Rubber Tape

UL 510.

2.21 TRANSFORMERS

Single- and three-phase transformers shall have two windings per phase. Full-capacity standard NEMA taps shall be provided in the primary windings

of transformers unless otherwise indicated. Three-phase transformers shall be configured with delta-wye windings, except as indicated. "T" connections may be used for transformers rated 15 kVA or below. Transformers supplying non-linear loads shall be UL listed as suitable for supplying such loads with a total K-factor not to exceed 13 and have neutrals sized for 200 percent of rated current.

2.21.1 Transformers, Dry-Type

Transformers shall have 220 degrees C insulation system for transformers 15 kVA and greater, and shall have 180 degrees C insulation system for transformers rated 10 kVA and less, with temperature rise not exceeding 80 degrees C under full-rated load in maximum ambient temperature of 40 degrees C. Transformer of 80 degrees C temperature rise shall be capable of carrying continuously 130 percent of nameplate kVA without exceeding insulation rating.

a. 600 Volt or Less Primary:

NEMA ST 20, UL 506, general purpose, dry-type, self-cooled, ventilated. Transformers shall be provided in NEMA 1 enclosure. Transformers shall be quiet type with maximum sound level at least 3 decibels less than NEMA standard level for transformer ratings indicated.

2.21.2 Average Sound Level

The average sound level in decibels (dB) of transformers shall not exceed the following dB level at 12 inches for the applicable kVA rating range listed unless otherwise indicated:

kVA Range	dB Sound Level
1-50	50
51-150	55
151-300	58
301-500	60
501-700	62
701-1000	64
1001-1500	65
1501 & above	70

2.22 WIRING DEVICES

NEMA WD 1 for wiring devices, and NEMA WD 6 for dimensional requirements of wiring devices.

2.23 COORDINATED POWER SYSTEM PROTECTION

Analyses shall be prepared to demonstrate that the equipment and system constructed meet the specified requirements for equipment ratings, coordination, and protection. They shall include a load flow analysis, a fault current analysis, and protective device coordination study. The studies shall be performed by a registered professional engineer with demonstrated experience in power system coordination in the last three

years. The Contractor shall provide a list of references complete with points of contact, addresses and telephone numbers. The selection of the engineer is subject to the approval of the Contracting Officer.

2.23.1 Scope of Analyses

The fault current analysis, and protective device coordination study shall begin at: the source bus and extend through outgoing breakers.

2.23.2 Single Line Diagram

A single line diagram shall be prepared to show the electrical system buses, devices, transformation points, and all sources of fault current (including generator and motor contributions). A fault-impedance diagram or a computer analysis diagram may be provided. Each bus, device or transformation point shall have a unique identifier. If a fault-impedance diagram is provide, impedance data shall be shown. Locations of switches, breakers, and circuit interrupting devices shall be shown on the diagram together with available fault data, and the device interrupting rating.

2.23.3 Fault Current Analysis

2.23.3.1 Method

The fault current analysis shall be performed in accordance with methods described in IEEE Std 242, and IEEE Std 399.

2.23.3.2 Data

Actual data shall be utilized in fault calculations. Bus characteristics and transformer impedances shall be those proposed. Data shall be documented in the report.

2.23.3.3 Fault Current Availability

Balanced three-phase fault, bolted line-to-line fault, and line-to-ground fault current values shall be provided at each voltage transformation point and at each power distribution bus. The maximum and minimum values of fault available at each location shall be shown in tabular form on the diagram or in the report.

2.23.4 Coordination Study

The study shall demonstrate that the maximum possible degree of selectivity has been obtained between devices specified, consistent with protection of equipment and conductors from damage from overloads and fault conditions. The study shall include a description of the coordination of the protective devices in this project. Provide a written narrative that describes: which devices may operate in the event of a fault at each bus; the logic used to arrive at device ratings and settings; situation where system coordination is not achievable due to device limitations (an analysis of any device curves which order overlap); coordination between upstream and downstream devices; and relay settings. Recommendations to improve or enhance system reliability, and detail where such changes would involve additions or

modifications to the contract and cost changes (addition or reduction) shall be provided. Composite coordination plots shall be provided on log-log graph paper.

2.23.5 Study Report

a. The report shall include a narrative: the analyses performed; the bases and methods used; and the desired method of coordinated protection of the power system.

b. The study shall include descriptive and technical data for existing devices and new protective devices proposed. The data shall include manufacturers published data, nameplate data, and definition of the fixed or adjustable features of the existing or new protective devices.

c. The report shall document utility company data including system voltages, fault MVA, system X/R ratio, time-current characteristic curves, current transformer ratios, and relay device curves and protective device ratings and settings.

d. The report shall contain fully coordinated composite time-current characteristic curves for each bus in the system, as required to ensure coordinated power system protection between protective devices or equipment. The report shall include recommended ratings and settings of all protective devices in tabulated form.

e. The report shall provide the calculations performed for the analyses, including computer analysis programs utilized. The name of the software package, developer, and version number shall be provided.

2.24 TRANSFORMERS, SUBSTATIONS, AND SWITCHGEAR

Transformers, substations, and switchgear shall be of the indoor type having the ratings and arrangements indicated. Medium-voltage ratings of cable terminations shall be 15 kV between phases for 133 percent insulation level.

2.24.1 Secondary Unit Substation

Secondary unit substations shall comply with ANSI C37.121 and shall be of the radial type with an outgoing section mounted integrally on the transformer. Substations shall be subassembled and coordinated by one manufacturer and shall be shipped in complete sections ready for connection at the site. Complete sections shall include incoming, transformer, and outgoing sections and, where practicable, shall be shipped as one unit.

2.24.1.1 Incoming Section

Metal-enclosed interrupter switchgear consisting of fused, air-insulated interrupters in series with automatic, visible blade disconnects shall be provided for protection of incoming circuits. Metal-enclosed interrupter switchgear shall comply with IEEE ANSI/IEEE C37.30 for load-interrupter

switches, NEMA SG 2 for power fuses, and shall be of the indoor type that meets or exceeds the requirements of applicable publications listed. Switch construction shall be of the manually-operated, "OPEN-CLOSED," air-insulated, load interrupter type equipped with a stored energy operator for quick-make quick-break to make operating speeds independent of manual switch operations. Where indicated, suitable bus or lug connections shall be provided to mount field-installed, slip-on, medium-voltage cable terminations for cable entering via conduit from below and a flanged throat suitable for direct connection to the associated transformer. Surge protection shall be provided in accordance with paragraph SURGE ARRESTERS. Selector switches shall be of the single-compartment, 3-position type, Line 1 - Open - Line 2, consisting of an interrupter switch in series with a selector switch.

a. Ratings. Fuse continuous current ratings shall be as indicated for the transformer for an incoming line unit and for the line tie unit. Unless otherwise indicated, fuses shall be of the current limiting type. Switch ratings at 60 Hz shall be:

Nominal voltage.....13.8 Kv.

Rated maximum voltage.....15 Kv.

Maximum symmetrical interrupting capacity.....500 MVA.

Maximum asymmetrical interrupting capacity.....40 KA.

3-Second short time current carrying capacity.....25 KA.

Rated continuous current.....600 A.

BIL.....95 Kv.

b. Basic Requirements. The electrical devices listed below shall be rated for the application and voltage and current indicated. Unless otherwise noted, manufacturer's standard devices shall be provided and shall include the following:

(1) A switch-operating handle with provisions for locking in either the open or closed position.

(2) A switch mechanical position indicator.

(3) Safety devices as necessary to ensure that the load interrupter switch is in the open position whenever unit doors are in the open position.

(4) A key interlock if indicated.

(5) An interface terminal block wired for required exterior connections.

2.24.1.2 Transformer Section

Transformers shall have two separate windings per phase and shall be dry type. Transformer accessories and ratings shall be as follows:

A. Forced-Air Cooling Provisions: Cooling fans, temperature-sensing devices, and controls; complete with housings, mounting devices, conduit and wiring.

1. Cooling-Fan-Operation: Automatically and sequentially controlled by temperature-sensing devices.

2. Manually Operagble Switch: Connected in parallel with automatic-control contacts.

3. Enclosures for Controls: Cabinets mounted on side of transformer as a height not more than 60 inches above base..

4. Cooling Fans: Propeller type, with aluminum blades and direct drive, totally enclosed, fan-cooled motors..

5. Motor Circuits: Individually fused or terminally protected.

6. Fans: OSHA Blade guards.

7. Fan Control: Thermally operated, windings temperature-sensing devices.

B. Comply with NEMA ST 20, IEEE C.57.12.01, and IEEE C57.94, and list and label as complying with UL 1562.

C. Enclosure: Indoor, ventilated.

D. Cooling System: Comply with IEEE C57.12.01 class indication in the Medium-Voltage Transformer Schedule.

E. Insulation Class: 220 deg. C.

1. Rated Temperature Rise: 115 deg. C maximum rise above 40 deg. C.

2. Basic Impulse Insulation Level: 95 kV (12 and 15 kV nominal class).

F. Full Capacity Voltage Taps: Four 2.5 percent taps; 2 above and 2 below rated high voltage.

G. Impedance: Manufacturer's standard unless otherwise indicated.

H. Windings shall be vacuum impregnated with polyester resins. High and low voltage windings shall be connected with flexible braid to their respective terminals.

I. Vibration Isolation: Rubber isolation pads between core and coils and enclosure.

J. Grounding: Core visibly ground to ground pad by means of flexible

conductor.

K. Include the following accessories:

1. High Voltage Surge Arresters: Distribution class, low-flashover, metal-oxide-varistor type complying with NEMA LA 1; factory installed and connected to high-voltage terminals.

2. High-Voltage Terminal Compartment: Steel compartment with height to match transformer.

3. Low-Voltage Terminal Compartment: Steel compartment with height to match transformer.

4. High-Temperature Alrm: A sensor at the transformer with local audible and visual alarm and contacts for remote alarm.

2.24.1.3 Integral Outgoing Section

Integral outgoing section shall be of the metal-enclosed switchgear type. Each circuit breaker and auxiliary compartment shall have a suitable metal or laminated plastic nameplate with white cut letters at least 1/4 inch high on contrasting backgrounds identifying the breaker unit and/or circuit number as shown on the drawings.

a. Busway Throat Compartment Type: Outgoing section shall consist of an enclosure containing metering devices on the main secondary circuit and connections from transformer terminals to suitable busway throats provided for connections to busway installations entering as shown. Connection to porcelain bushings shall be made with flexible jumpers.

b. Metal-Enclosed Switchgear Type: Outgoing section shall be of the metal-enclosed drawout circuit breaker type, in accordance with IEEE ANSI/IEEE C37.20.1 and NEMA SG 5. Low-voltage power circuit breakers shall comply with the requirements of paragraph METERING AND PROTECTIVE DEVICES.

c. Metering: The main secondary bus of each outgoing section assembly shall include a watthour demand meter with the necessary instrument transformers, and VT and CT test blocks. Metering shall be as specified in paragraph METERING AND PROTECTIVE DEVICES.

d. Ground Fault Protection: Ground fault protection shall be provided utilizing sensors of the zero-sequence type or by the residual connection of phase and neutral current sensors. Ground fault settings shall be as determined by the coordination study.

2.25 METERING AND PROTECTIVE DEVICES

2.25.1 Circuit Breakers, Low-Voltage

2.25.1.1 Low-Voltage Power Circuit Breakers

a. Construction

Low-voltage power circuit breakers shall conform to IEEE ANSI/IEEE C37.13, ANSI C37.16, and NEMA SG 3 and shall be three-pole, single-throw, stored energy, electrically operated, with drawout mounting. Solid-state trip elements which require no external power connections shall be provided. Circuit breakers shall have an open/close contact indicator, primary disconnect devices, and a mechanical interlock to prevent making or breaking contact of primary disconnections when the circuit breaker is closed. Control voltage shall be 120 V ac. The circuit breaker enclosure shall be suitable for its intended location.

b. Ratings

Voltage ratings shall be not less than the applicable circuit voltage. Circuit breakers shall be rated for 100 percent continuous duty and shall have trip current ratings and frame sizes as shown. Nominal voltage ratings, maximum continuous-current ratings, and maximum short-circuit interrupting ratings shall be in accordance with ANSI C37.16. Tripping features shall be as follows:

1. Long-time current pick-up, adjustable from 50 percent to 100 percent of sensor current rating.

2. Adjustable long-time delay.

3. Short-time current pick-up, adjustable from 1.5 to 9 times long-time current setting.

4. Adjustable short-time delay.

5. Short-time I2t switch.

6. Instantaneous current pick-up, adjustable from 1.5 to 9 times long-time current setting.

7. Ground-fault pick-up, adjustable from 20 percent to 60 percent of sensor rating, but in no case greater than 1200 amperes. Sensing of ground-fault current at the main bonding jumper or ground strap shall not be permitted.

8. Adjustable ground-fault delay.

9. Overload and short-circuit and ground-fault trip indicators shall be provided.

2.25.2 Fuses, Medium-Voltage, Including Current-Limiting

2.25.2.1 Construction

Units shall be suitable for indoor use. Fuses shall have integral blown-fuse indicators. All ratings shall be clearly visible.

2.25.2.2 Ratings

Current-limiting power fuses shall have ratings in accordance with ANSI C37.46 and as follows:

Nominal voltage.....13.8 kV

Rated maximum voltage.....15 kV

Maximum symmetrical interrupting capacity.....500 MVA

Rated continuous current.....175 A

BIL.....95 kV

2.25.2.3 E-Rated, Current-Limiting Power Fuses

E-rated, current-limiting, power fuses shall conform to ANSI C37.46.

2.25.3 Instrument Transformers

2.25.3.1 General

Instrument transformers shall comply with ANSI C12.11 and IEEE ANSI/IEEE C57.13. Instrument transformers shall be configured for mounting in/on the device to which they are applied. Polarity marks on instrument transformers shall be visually evident and shown on drawings.

2.25.3.2 Current Transformers

Unless otherwise indicated, bar, wound, or window-type transformers are acceptable; and except for window-type units installed over insulated buses, transformers shall have a BIL rating consistent with the rated BIL of the associated switchgear or electric power apparatus bushings, buses or conductors. Current transformers shall have the indicated ratios. The continuous thermal-current rating factor shall not be less than 1.5. Other thermal and mechanical ratings of current transformers and their primary leads shall be coordinated with the design of the circuit breaker and shall be not less than the momentary rating of the associated circuit breaker. Circuit protectors shall be provided across secondary leads of the current transformers to prevent the accident open-circuiting of the transformers while energized. Each terminal of each current transformer shall be connected to a short-circuiting terminal block in the circuit interrupting mechanism cabinet, power transformer terminal cabinet, and in the associated instrument and relay cabinets.

2.25.3.3 Current Transformers for Metal-Enclosed Switchgear

Single-ratio units, used for metering and relaying, shall have a metering accuracy class rating of 0.3. Single-ratio units, used only for relaying, shall have a relaying accuracy class rating of C Classification.

2.25.3.4 Current Transformers for Kwh and Demand Metering (Low-Voltage)

Current transformers shall conform to IEEE ANSI/IEEE C57.13. Provide current transformers with a metering accuracy Class of 0.3 through B-1.8, with a minimum RF of 1.33 at 30 degrees C, with 600-volt insulations, and 10 kV BIL. Provide butyl-molded, window-type current transformers mounted in the current transformer cabinet.

2.25.3.5 Voltage Transformers

Voltage transformers shall have indicated ratios. Units shall have an accuracy class rating of 0.3. Voltage transformers shall be of the drawout type having current-limiting fuses in both primary and secondary circuits. Mechanical interlocks shall prevent removal of fuses, unless the associated voltage transformer is in a drawout position. Voltage transformer compartments shall have hinged doors.

2.25.4 Watthour Meters

Watthour meters shall comply with ANSI C12.1 and ANSI C12.10, except that numbered terminal wiring sequence and case size may be the manufacturer's standard. Watthour meters shall be of the drawout switchboard type having a 15 minute, cumulative form, demand register meeting ANSI C12.4 and provided with not less than 2-1/2 stators. Watthour demand meters shall have factory-installed electronic pulse initiators meeting the requirements of ANSI C12.1. Pulse initiators shall be solid-state devices incorporating light-emitting diodes, phototransistors, and power transistors, except that mercury-wetted output contacts are acceptable. Initiators shall be totally contained within watthour demand meter enclosures. They shall be capable of operating at speeds up to 500 pulses per minute with no false pulses, and they shall be factory calibrated with no field adjustments being required. Initiators shall be calibrated for a pulse rate output of 1 pulse per 1/4 disc revolution of the associated meter and shall be compatible with the indicated equipment.

2.26 SURGE ARRESTERS

Surge arresters shall comply with NEMA LA 1, IEEE C62.1, IEEE C62.2, and IEEE C62.11 and shall be provided where indicated. Arresters shall be distribution class, rated as shown. Arresters for use at elevations in excess of 6000 feet above mean sea level shall be specifically rated for that purpose. Arresters shall be equipped with mounting brackets suitable for the indicated installations. Arresters shall be of the metal-oxide varistor type.

PART 3 EXECUTION

3.1 GROUNDING

Grounding shall be in conformance with NFPA 70, the contract drawings, and the following specifications.

3.1.1 Ground Rods

The resistance to ground shall be measured using the fall-of-potential method described in IEEE Std 81. The maximum resistance of a driven ground

shall not exceed 25 ohms under normally dry conditions. If this resistance cannot be obtained with a single rod, 3 additional rods not less than 6 feet on centers may be coupled and driven with the first rod. In high-ground-resistance, UL listed chemically charged ground rods may be used. If the resultant resistance exceeds 25 ohms measured not less than 48 hours after rainfall, the Contracting Officer shall be notified immediately. Connections below grade shall be fusion welded. Connections above grade shall be fusion welded or shall use UL 467 approved connectors.

3.1.2 Ground Bus

Ground bus shall be provided in the electrical equipment rooms as indicated. Noncurrent-carrying metal parts of transformer neutrals and other electrical equipment shall be effectively grounded by bonding to the ground bus. The ground bus shall be bonded to both the entrance ground, and to a ground rod or rods as specified above having the upper ends terminating approximately 4 inches above the floor. Connections and splices shall be of the brazed, welded, bolted, or pressure-connector type, except that pressure connectors or bolted connections shall be used for connections to removable equipment.

3.1.3 Grounding Conductors

A green equipment grounding conductor, sized in accordance with NFPA 70 shall be provided, regardless of the type of conduit. Equipment grounding bars shall be provided in all panelboards. The equipment grounding conductor shall be carried back to the service entrance grounding connection or separately derived grounding connection. All equipment grounding conductors, including metallic raceway systems used as such, shall be bonded or joined together in each wiring box or equipment enclosure. Metallic raceways and grounding conductors shall be checked to assure that they are wired or bonded into a common junction. Metallic boxes and enclosures, if used, shall also be bonded to these grounding conductors by an approved means per NFPA 70. When boxes for receptacles, switches, or other utilization devices are installed, any designated grounding terminal on these devices shall also be bonded to the equipment grounding conductor junction with a short jumper.

3.2 WIRING METHODS

Wiring shall conform to NFPA 70, the contract drawings, and the following specifications. Unless otherwise indicated, wiring shall consist of insulated conductors installed in electrical metallic tubing. Where cables and wires are installed in cable trays, they shall be of the type permitted by NFPA 70 for use in such applications. Wire fill in conduits shall be based on NFPA 70 for the type of conduit and wire insulations specified.

3.2.1 Conduit and Tubing Systems

Conduit and tubing systems shall be installed as indicated. Conduit sizes shown are based on use of copper conductors with insulation types as described in paragraph WIRING METHODS. Minimum size of raceways shall be 1/2 inch. Only metal conduits will be permitted when conduits are required for shielding or other special purposes indicated, or when required by

conformance to NFPA 70. Nonmetallic conduit and tubing may be used in damp, wet or corrosive locations when permitted by NFPA 70 and the conduit or tubing system is provided with appropriate boxes, covers, clamps, screws or other appropriate type of fittings. Electrical metallic tubing (EMT) may be installed only within buildings. EMT may be installed in concrete and grout in dry locations. EMT installed in concrete or grout shall be provided with concrete tight fittings. EMT shall not be installed in damp or wet locations, or the air space of exterior masonry cavity walls, or perimeter walls of pool areas. Bushings, manufactured fittings or boxes providing equivalent means of protection shall be installed on the ends of all conduits and shall be of the insulating type, where required by NFPA 70. Only UL listed adapters shall be used to connect EMT to rigid metal conduit, cast boxes, and conduit bodies. Penetrations of above grade floor slabs, fire-rated partitions, chases and roofs, and fire walls shall be firestopped in accordance with Section 07840 FIRESTOPPING. Except as otherwise specified, IMC may be used as an option for rigid steel conduit in areas as permitted by NFPA 70. Raceways shall not be installed under the firepits of boilers and furnaces and shall be kept 6 inches away from parallel runs of flues, steam pipes and hot-water pipes. Raceways shall be concealed within finished walls, ceilings, and floors unless otherwise shown. Raceways crossing structural expansion joints or seismic joints shall be provided with suitable expansion fittings or other suitable means to compensate for the building expansion and contraction and to provide for continuity of grounding. Conduits for paging and telecommunication systems shall conform to this specification.

3.2.1.1 Pull Wires

A pull wire shall be inserted in each empty raceway in which wiring is to be installed if the raceway is more than 50 feet in length and contains more than the equivalent of two 90-degree bends, or where the raceway is more than 150 feet in length. The pull wire shall be of No. 14 AWG zinc-coated steel, or of plastic having not less than 200 pounds per square inch tensile strength. Not less than 10 inches of slack shall be left at each end of the pull wire.

3.2.1.2 Conduit Stub-Ups

Where conduits are to be stubbed up through concrete floors, a short elbow shall be installed below grade to transition from the horizontal run of conduit to a vertical run. A conduit coupling fitting, threaded on the inside shall be installed, to allow terminating the conduit flush with the finished floor. Wiring shall be extended in rigid threaded conduit to equipment, except that where required, flexible conduit may be used 6 inches above the floor. Empty or spare conduit stub-ups shall be plugged flush with the finished floor with a threaded, recessed plug.

3.2.1.3 Below Slab-on-Grade or in the Ground

Electrical wiring below slab-on-grade shall be protected by a conduit system. Conduit passing vertically through slabs-on-grade shall be rigid steel or IMC. Rigid steel or IMC conduits installed below slab-on-grade or in the earth shall be field wrapped with 0.010 inch thick pipe-wrapping plastic tape applied with a 50 percent overlay, or shall have a

factory-applied polyvinyl chloride, plastic resin, or epoxy coating system.

3.2.1.4 Installing in Slabs Including Slabs on Grade

Conduit installed in slabs-on-grade shall be rigid steel or IMC. Conduits shall be installed as close to the middle of concrete slabs as practicable without disturbing the reinforcement. Outside diameter shall not exceed 1/3 of the slab thickness and conduits shall be spaced not closer than 3 diameters on centers except at cabinet locations where the slab thickness shall be increased as approved by the Contracting Officer. Where conduit is run parallel to reinforcing steel, the conduit shall be spaced a minimum of one conduit diameter away but not less than one inch from the reinforcing steel.

3.2.1.5 Changes in Direction of Runs

Changes in direction of runs shall be made with symmetrical bends or cast-metal fittings. Field-made bends and offsets shall be made with an approved hickey or conduit-bending machine. Crushed or deformed raceways shall not be installed. Trapped raceways in damp and wet locations shall be avoided where possible. Lodgment of plaster, dirt, or trash in raceways, boxes, fittings and equipment shall be prevented during the course of construction. Clogged raceways shall be cleared of obstructions or shall be replaced.

3.2.1.6 Supports

Metallic conduits and tubing,and the support system to which they are attached, shall be securely and rigidly fastened in place to prevent vertical and horizontal movement at intervals of not more than 10 feet and within 3 feet of boxes, cabinets, and fittings, with approved pipe straps, wall brackets, conduit clamps, conduit hangers, threaded C-clamps, beam clamps, or ceiling trapeze. Loads and supports shall be coordinated with supporting structure to prevent damage or deformation to the structure. Loads shall not be applied to joist bridging. Attachment shall be by wood screws or screw-type nails to wood; by toggle bolts on hollow masonry units; by expansion bolts on concrete or brick; by machine screws, welded threaded studs, heat-treated or spring-steel-tension clamps on steel work. Nail-type nylon anchors or threaded studs driven in by a powder charge and provided with lock washers and nuts may be used in lieu of expansion bolts or machine screws. Raceways or pipe straps shall not be welded to steel structures. Cutting the main reinforcing bars in reinforced concrete beams or joists shall be avoided when drilling holes for support anchors. Holes drilled for support anchors, but not used, shall be filled. In partitions of light steel construction, sheet-metal screws may be used. Raceways shall not be supported using wire or nylon ties. Raceways shall be independently supported from the structure. Upper raceways shall not be used as a means of support for lower raceways. Supporting means shall not be shared between electrical raceways and mechanical piping or ducts. Cables and raceways shall not be supported by ceiling grids. Except where permitted by NFPA 70, wiring shall not be supported by ceiling support systems. Conduits shall be fastened to sheet-metal boxes and cabinets with two locknuts where required by NFPA 70, where insulating bushings are used, and where bushings cannot be brought into firm contact with the box;

otherwise, a single locknut and bushing may be used. Threadless fittings for electrical metallic tubing shall be of a type approved for the conditions encountered. Additional support for horizontal runs is not required when EMT rests on steel stud cutouts.

3.2.1.7 Exposed Raceways

Exposed raceways shall be installed parallel or perpendicular to walls, structural members, or intersections of vertical planes and ceilings. Raceways under raised floors and above accessible ceilings shall be considered as exposed installations in accordance with NFPA 70 definitions.

3.2.1.8 Exposed Risers

Exposed risers in wire shafts of multistory buildings shall be supported by U-clamp hangers at each floor level, and at intervals not to exceed 10 feet.

3.2.1.9 Exposed Lengths of Conduit, Over 600 Volts

Exposed lengths of conduit containing power conductors operating at more than 600 volts shall have two red bands 2 inches wide spaced 8 inches apart painted near each coupling; the intervening space between the red bands shall be painted white, and on the white space the voltage shall be stenciled in black: 13800 volts.

3.2.1.10 Communications Raceways

Communications raceways indicated shall be installed in accordance with the previous requirements for conduit and tubing and with the additional requirement that no length of run shall exceed 50 feet for 1/2 inch and 3/4 inch sizes, and 100 feet for 1 inch or larger sizes, and shall not contain more than two 90-degree bends or the equivalent. Additional pull or junction boxes shall be installed to comply with these limitations whether or not indicated. Inside radii of bends in conduits of 1 inch size or larger shall not be less than ten times the nominal diameter.

3.2.2 Cables and Conductors

Installation shall conform to the requirements of NFPA 70. Covered, bare or insulated conductors of circuits rated over 600 volts shall not occupy the same equipment wiring enclosure, cable, or raceway with conductors of circuits rated 600 volts or less.

3.2.2.1 Sizing

Unless otherwise noted, all sizes are based on copper conductors and the insulation types indicated. Sizes shall be not less than indicated. Branch-circuit conductors shall be not smaller than No. 12 AWG. Conductors for branch circuits of 120 volts more than 100 feet long and of 277 volts more than 230 feet long, from panel to load center, shall be no smaller than No. 10 AWG. Class 1 remote control and signal circuit conductors shall be not less than No. 14 AWG. Class 2 remote control and signal circuit conductors shall be not less than No. 16 AWG. Class 3 low-energy,

remote-control and signal circuits shall be not less than No. 22 AWG.

3.2.2.2 Use of Aluminum Conductors in Lieu of Copper

Aluminum conductors shall not be used.

3.2.2.3 Cable Splicing

Splices shall be made in an accessible location. Crimping tools and dies shall be approved by the connector manufacturer for use with the type of connector and conductor.

a. Copper Conductors, 600 Volt and Under: Splices in conductors No. 10 AWG and smaller diameter shall be made with an insulated, pressure-type connector. Splices in conductors No. 8 AWG and larger diameter shall be made with a solderless connector and insulated with tape or heat-shrink type insulating material equivalent to the conductor insulation.

b. Greater Than 600 Volt: Cable splices shall be made in accordance with the cable manufacturer's recommendations and Section 16375 ELECTRICAL DISTRIBUTION SYSTEM, UNDERGROUND.

3.2.2.4 Conductor Identification and Tagging

Power, control, and signal circuit conductor identification shall be provided within each enclosure where a tap, splice, or termination is made. Where several feeders pass through a common pull box, the feeders shall be tagged to indicate clearly the electrical characteristics, circuit number, and panel designation. Phase conductors of low voltage power circuits shall be identified by color coding. Phase identification by a particular color shall be maintained continuously for the length of a circuit, including junctions.

a. Color coding shall be provided for service, feeder, branch, and ground conductors. Color shall be green for grounding conductors and white for neutrals; except where neutrals of more than one system are installed in the same raceway or box, other neutral shall be white with colored (not green) stripe. The color coding for 3-phase and single-phase low voltage systems shall be as follows:

120/208-volt, 3-phase: Black(A), red(B), and blue(C).
277/480-volt, 3-phase: Brown(A), orange(B), and yellow(C).
120/240-volt, 1-phase: Black and red.

b. Conductor phase and voltage identification shall be made by color-coded insulation for all conductors smaller than No. 6 AWG. For conductors No. 6 AWG and larger, identification shall be made by color-coded insulation, or conductors with black insulation may be furnished and identified by the use of half-lapped bands of colored electrical tape wrapped around the insulation for a minimum of 3 inches of length near the end, or other method as

submitted by the Contractor and approved by the Contracting Officer.

c. Control and signal circuit conductor identification shall be made by color-coded insulated conductors, plastic-coated self-sticking printed markers, permanently attached stamped metal foil markers, or equivalent means as approved. Control circuit terminals of equipment shall be properly identified. Terminal and conductor identification shall match that shown on approved detail drawings. Hand lettering or marking is not acceptable.

3.3 BOXES AND SUPPORTS

Boxes shall be provided in the wiring or raceway systems where required by NFPA 70 for pulling of wires, making connections, and mounting of devices or fixtures. Pull boxes shall be furnished with screw-fastened covers. Indicated elevations are approximate, except where minimum mounting heights for hazardous areas are required by NFPA 70. Unless otherwise indicated, boxes for wall switches shall be mounted 48 inches above finished floors. Switch and outlet boxes located on opposite sides of fire rated walls shall be separated by a minimum horizontal distance of 24 inches. The total combined area of all box openings in fire rated walls shall not exceed 100 square inches per 100 square feet. Maximum box areas for individual boxes in fire rated walls vary with the manufacturer and shall not exceed the maximum specified for that box in UL Elec Const Dir. Only boxes listed in UL Elec Const Dir shall be used in fire rated walls.

3.3.1 Box Applications

Each box shall have not less than the volume required by NFPA 70 for number of conductors enclosed in box. Boxes for metallic raceways, 4 by 4 inch nominal size and smaller, shall be of the cast-metal hub type when located in normally wet locations, when flush and surface mounted on outside of exterior surfaces, or when located in hazardous areas. Cast-metal boxes installed in wet locations and boxes installed flush with the outside of exterior surfaces shall be gasketed. Boxes for mounting lighting fixtures shall be not less than 4 inches square, or octagonal, except smaller boxes may be installed as required by fixture configuration, as approved. Cast-metal boxes with 3/32 inch wall thickness are acceptable. Large size boxes shall be NEMA 1 or as shown. Boxes in other locations shall be sheet steel except that aluminum boxes may be used with aluminum conduit, and nonmetallic boxes may be used with nonmetallic conduit and tubing or nonmetallic sheathed cable system, when permitted by NFPA 70. Boxes for use in masonry-block or tile walls shall be square-cornered, tile-type, or standard boxes having square-cornered, tile-type covers. Box covers shall be identified using permanent markers with the circuits and loads fed. Covers for fire alarm system boxes shall be red colored.

3.3.2 Brackets and Fasteners

Boxes and supports shall be fastened to wood with wood screws or screw-type nails of equal holding strength, with bolts and metal expansion shields on concrete or brick, with toggle bolts on hollow masonry units, and with machine screw or welded studs on steel work. Threaded studs driven in by

powder charge and provided with lockwashers and nuts, or nail-type nylon anchors may be used in lieu of expansion shields, or machine screws. Penetration of more than 1-1/2 inches into reinforced-concrete beams or more than 3/4 inch into reinforced-concrete joists shall avoid cutting any main reinforcing steel. The use of brackets which depend on gypsum wallboard or plasterboard for primary support will not be permitted. In partitions of light steel construction, bar hangers with 1 inch long studs, mounted between metal wall studs or metal box mounting brackets shall be used to secure boxes to the building structure. When metal box mounting brackets are used, additional box support shall be provided on the side of the box opposite the brackets. This additional box support shall consist of a minimum 12 inch long section of wall stud, bracketed to the opposite side of the box and secured by two screws through the wallboard on each side of the stud. Metal screws may be used in lieu of the metal box mounting brackets.

3.3.3 Mounting in Walls, Ceilings, or Recessed Locations

In walls or ceilings of concrete, tile, or other non-combustible material, boxes shall be installed so that the edge of the box is not recessed more than 1/4 inch from the finished surface. Boxes mounted in combustible walls or ceiling material shall be mounted flush with the finished surface. The use of gypsum or plasterboard as a means of supporting boxes will not be permitted. Boxes installed for concealed wiring shall be provided with suitable extension rings or plaster covers, as required. The bottom of boxes installed in masonry-block walls for concealed wiring shall be mounted flush with the top of a block to minimize cutting of the blocks, and boxes shall be located horizontally to avoid cutting webs of block. Separate boxes shall be provided for flush or recessed fixtures when required by the fixture terminal operating temperature, and fixtures shall be readily removable for access to the boxes unless ceiling access panels are provided.

3.3.4 Installation in Overhead Spaces

In open overhead spaces, cast-metal boxes threaded to raceways need not be separately supported except where used for fixture support; cast-metal boxes having threadless connectors and sheet metal boxes shall be supported directly from the building structure or by bar hangers. Hangers shall not be fastened to or supported from joist bridging. Where bar hangers are used, the bar shall be attached to raceways on opposite sides of the box and the raceway shall be supported with an approved type fastener not more than 24 inches from the box.

3.4 DEVICE PLATES

One-piece type device plates shall be provided for all outlets and fittings. Plates on unfinished walls and on fittings shall be of zinc-coated sheet steel, cast-metal, or impact resistant plastic having rounded or beveled edges. Plates on finished walls shall be of satin finish corrosion resistant steel or satin finish chromium plated brass. Screws shall be of metal with countersunk heads, in a color to match the finish of the plate. Plates shall be installed with all four edges in continuous contact with finished wall surfaces without the use of mats or

similar devices. Plaster fillings will not be permitted. Plates shall be installed with an alignment tolerance of 1/16 inch. The use of sectional-type device plates will not be permitted. Plates installed in wet locations shall be gasketed and provided with a hinged, gasketed cover, unless otherwise specified.

3.5 RECEPTACLES

3.5.1 Single and Duplex, 15 or 20-ampere, 125 volt

Single and duplex receptacles shall be rated 20 amperes, 125 volts, two-pole, three-wire, grounding type with polarized parallel slots. Bodies shall be of color as selected by Contracting Officer to match color of switch handles in the same room or to harmonize with the color of the respective wall, and supported by mounting strap having plaster ears. Contact arrangement shall be such that contact is made on two sides of an inserted blade. Receptacle shall be side- or back-wired with two screws per terminal. The third grounding pole shall be connected to the metal mounting yoke. Switched receptacles shall be the same as other receptacles specified except that the ungrounded pole of each suitable receptacle shall be provided with a separate terminal. Only the top receptacle of a duplex receptacle shall be wired for switching application. Receptacles with ground fault circuit interrupters shall have the current rating as indicated, and shall be UL Class A type unless otherwise shown. Ground fault circuit protection shall be provided as required by NFPA 70 and as indicated on the drawings.

3.5.2 Clock Outlet

Clock outlet, for use in other than a wired clock system, shall consist of an outlet box, a plaster cover where required, and a single receptacle with clock-outlet plate. The receptacle shall be recessed sufficiently within the box to allow the complete insertion of a standard cap, flush with the plate. A suitable clip or support for hanging the clock shall be secured to the top of the plate. Material and finish of the plate shall be as specified in paragraph DEVICE PLATES.

3.5.3 Floor Outlets

Floor outlets shall be adjustable and each outlet shall consist of a cast-metal body with threaded openings for conduits, adjustable ring, and cover plate with 1/2 inch or 3/4 inch threaded flush plug. Each telephone outlet shall consist of a horizontal cast housing with a receptacle as specified. Gaskets shall be used where necessary to ensure a watertight installation. Plugs with installation instructions shall be delivered to the Contracting Officer at the job site for capping outlets upon removal of service fittings.

3.5.4 Weatherproof Applications

Weatherproof receptacles shall be suitable for the environment, damp or wet as applicable, and the housings shall be labeled to identify the allowable use. Receptacles shall be marked in accordance with UL 514A for the type of use indicated; "Damp locations", "Wet Locations", "Wet Location Only

When Cover Closed". Assemblies shall be installed in accordance with the manufacturer's recommendations.

3.5.4.1 Damp Locations

Receptacles in damp locations shall be mounted in an outlet box with a gasketed, weatherproof, cast-metal cover plate (device plate, box cover) and a gasketed cap (hood, receptacle cover) over each receptacle opening. The cap shall be either a screw-on type permanently attached to the cover plate by a short length of bead chain or shall be a flap type attached to the cover with a spring loaded hinge. Damp locvations are any location where GFI recepticles are provided without a Wp indication.

3.5.4.2 Wet Locations

Receptacles in wet locations shall be installed in an assembly rated for such use whether the plug is inserted or withdrawn, unless otherwise indicated. In a duplex installation, the receptacle cover shall be configured to shield the connections whether one or both receptacles are in use. Wet locations are outdoors, pool areas, and any location indicated by a Wp adjacent to an electrical device.

3.5.5 Receptacles, 15-Ampere, 250-Volt

Receptacles, 15-ampere, 250-volt, shall be single two-pole, three-wire, grounding type with bodies of color as selected by Contracting Officer phenolic compound supported by mounting yoke having plaster ears. The third grounding pole shall be connected to the metal yoke. Each receptacle shall be provided with a mating cord-grip plug.

3.5.6 Receptacles, 20-Ampere, 250-Volt

Receptacles, single, 20-ampere, 250-volt, shall be color as selected by Contracting Officer molded plastic, two-pole, three-wire or three-pole, four-wire, grounding type complete with appropriate mating cord-grip plug.

3.5.7 Receptacles, 30-Ampere, 125/250-Volt

Receptacles, single, 30-ampere, 125/250-volt, shall be molded-plastic, three-pole, four-wire, grounding type, complete with appropriate mating cord-grip type attachment plug. Each dryer receptacle shall be furnished with a non-detachable power supply cord for connection to the electric clothes dryer. The cord shall be an angle-type 36 inch length of Type SRDT range and dryer cable with three No. 10 AWG conductors.

3.5.8 Receptacles, 30-Ampere, 250-Volt

Receptacles, single, 30-ampere, 250-volt, shall be molded-plastic, three-pole, three-wire type, complete with appropriate mating cord-grip plug.

3.5.9 Receptacles, 50-Ampere, 125/250-Volt

Receptacles, single 50-ampere, 125/250-volt, shall be flush, molded

plastic, three-pole, four-wire, grounding type. Each range receptacle shall be furnished with a nondetachable power supply cord for connection to the electric range. The cord shall be an angle-type 36 inch length of SRDT range and dryer cable with one No. 8 and two No. 6 AWG conductors.

3.5.10 Receptacles, 50-Ampere, 250-Volt

Receptacles, single, 50-ampere, 250-volt, shall be flush molded plastic, three-pole, three-wire type, complete with appropriate mating cord-grip plug.

3.5.11 Special-Purpose or Heavy-Duty Receptacles

Special-purpose or heavy-duty receptacles shall be of the type and of ratings and number of poles indicated or required for the anticipated purpose. Contact surfaces may be either round or rectangular. One appropriate straight or angle-type plug shall be furnished with each receptacle. Locking type receptacles, rated 30 amperes or less, shall be locked by rotating the plug. Locking type receptacles, rated more than 50 amperes, shall utilize a locking ring.

3.6 WALL SWITCHES

Wall switches shall be of the totally enclosed tumbler type. The wall switch handle and switch plate color shall be color as selected by Contracting Officer. Wiring terminals shall be of the screw type or of the solderless pressure type having suitable conductor-release arrangement. Not more than one switch shall be installed in a single-gang position. Switches shall be rated 20-ampere 277/120-volt for use on alternating current only. Pilot lights indicated shall consist of yoke-mounted candelabra-base sockets rated at 75 watts, 125 volts, and fitted with glass or plastic jewels. A clear 6-watt lamp shall be furnished and installed in each pilot switch. Jewels for use with switches controlling motors shall be green, and jewels for other purposes shall be red. Dimming switches shall be solid-state flush mounted, sized for the loads.

3.7 SERVICE EQUIPMENT

Service-disconnecting means shall be of the type indicated in paragraph POWER SWITCHGEAR ASSEMBLIES including switchboard. with an external handle for manual operation. When service disconnecting means is a part of an assembly, the assembly shall be listed as suitable for service entrance equipment. Enclosures shall be sheet metal with hinged cover for surface mounting unless otherwise indicated.

3.8 PANELBOARDS

Circuit breakers and switches used as a motor disconnecting means shall be capable of being locked in the open position. Door locks shall be keyed alike. Nameplates shall be as approved. Directories shall be typed to indicate loads served by each circuit and mounted in a holder behind a clear protective covering. Busses shall be copper.

3.8.1 Panelboards

Panelboards shall be circuit breaker or fusible switch equipped as indicated on the drawings. Multipole fusible switches shall be of the hinged-door type; single pole fusible switches shall be of the tumbler switch and fuse type. Switches serving as a motor disconnect means shall be of the tumbler switch and fuse type. Switches serving as motor disconnect means shall be horsepower rated in conformance with UL 98.

3.9 FUSES

Equipment provided under this contract shall be provided with a complete set of properly rated fuses when the equipment manufacturer utilize fuses in the manufacture of the equipment, or if current-limiting fuses are required to be installed to limit the ampere-interrupting capacity of circuit breakers or equipment to less than the maximum available fault current at the location of the equipment to be installed. Fuses shall have a voltage rating of not less than the phase-to-phase circuit voltage, and shall have the time-current characteristics required for effective power system coordination. Time-delay and non-time-delay options shall be as specified.

3.9.1 Continuous Current Ratings (600 Amperes and Smaller)

Service entrance and feeder circuit fuses (600 amperes and smaller) shall be Class J, current-limiting, time-delay with 200,000 amperes interrupting capacity.

3.10 UNDERGROUND SERVICE

Unless otherwise indicated, interior conduit systems shall be stubbed out 5 feet beyond the building wall and 2 feet below finished grade, for interface with the exterior service lateral conduits [and exterior communications conduits]. Outside conduit ends shall be bushed when used for direct burial service lateral conductors. Outside conduit ends shall be capped or plugged until connected to exterior conduit systems. Underground service lateral conductors will be extended to building service entrance and terminated in accordance with the requirements of Section 16375 ELECTRICAL DISTRIBUTION SYSTEM, UNDERGROUND and NFPA 70.

3.11 MOTORS

Each motor shall conform to the hp and voltage ratings indicated, and shall have a service factor and other characteristics that are essential to the proper application and performance of the motors under conditions shown or specified. Three-phase motors for use on 3-phase 208-volt systems shall have a nameplate rating of 200 volts. Unless otherwise specified, all motors shall have open frames, and continuous-duty classification based on a 40 degree C ambient temperature reference. Polyphase motors shall be squirrel-cage type, having normal-starting-torque and low-starting-current characteristics, unless other characteristics are specified in other sections of these specifications or shown on contract drawings. The Contractor shall be responsible for selecting the actual horsepower ratings and other motor requirements necessary for the applications indicated. When electrically driven equipment furnished under other

sections of these specifications materially differs from the design, the Contractor shall make the necessary adjustments to the wiring, disconnect devices and branch-circuit protection to accommodate the equipment actually installed.

3.12 MOTOR CONTROL

Each motor or group of motors requiring a single control and not controlled from a motor-control center shall be provided with a suitable controller and devices that will perform the functions as specified for the respective motors. Each motor of 1/8 hp or larger shall be provided with thermal-overload protection. Polyphase motors shall have overload protection in each ungrounded conductor. The overload-protection device shall be provided either integral with the motor or controller, or shall be mounted in a separate enclosure. Unless otherwise specified, the protective device shall be of the manually reset type. Single or double pole tumbler switches specifically designed for alternating-current operation only may be used as manual controllers for single-phase motors having a current rating not in excess of 80 percent of the switch rating. Automatic control devices such as thermostats, float or pressure switches may control the starting and stopping of motors directly, provided the devices used are designed for that purpose and have an adequate horsepower rating. When the automatic-control device does not have such a rating, a magnetic starter shall be used, with the automatic-control device actuating the pilot-control circuit. When combination manual and automatic control is specified and the automatic-control device operates the motor directly, a double-throw, three-position tumbler or rotary switch shall be provided for the manual control; when the automatic-control device actuates the pilot control circuit of a magnetic starter, the latter shall be provided with a three-position selector switch marked MANUAL-OFF-AUTOMATIC. Connections to the selector switch shall be such that only the normal automatic regulatory control devices will be bypassed when the switch is in the Manual position; all safety control devices, such as low- or high-pressure cutouts, high-temperature cutouts, and motor-overload protective devices, shall be connected in the motor-control circuit in both the Manual and the Automatic positions of the selector switch. Control circuit connections to any MANUAL-OFF-AUTOMATIC switch or to more than one automatic regulatory control device shall be made in accordance with wiring diagram approved by the Contracting Officer unless such diagram is included on the drawings. All controls shall be 120 volts or less unless otherwise indicated.

3.12.1 Reduced-Voltage Controllers

Reduced-voltage controllers shall be provided for polyphase motors 100 hp or larger. Reduced-voltage starters shall be of the single-step autotransformer, reactor, or resistor type having an adjustable time interval between application of reduced and full voltages to the motors. Wye-delta reduced voltage starters or part winding increment starters having an adjustable time delay between application of voltage to first and second winding of motor may be used in lieu of the reduced voltage starters specified above for starting of motor-generator sets, centrifugally operated equipment or reciprocating compressors provided with automatic unloaders.

3.12.2 Motor Control Centers

Control centers shall be indoor type and shall contain combination starters and other equipment as indicated. Control centers shall be NEMA ICS 2, Class 1, Type A. Each control center shall be mounted on floor sills or mounting channels. Each circuit shall have a suitable metal or laminated plastic nameplate with white cut letters. Combination starters shall be provided with circuit breakers. Motor control centers shall be provided with a full-length ground bus bar.

3.12.3 Contacts

Unless otherwise indicated, contacts in miscellaneous control devices such as float switches, pressure switches, and auxiliary relays shall have current and voltage ratings in accordance with NEMA ICS 2 for rating designation B300.

3.13 MOTOR-DISCONNECT MEANS

Each motor shall be provided with a disconnecting means when required by NFPA 70 even though not indicated. For single-phase motors, a single or double pole toggle switch, rated only for alternating current, will be acceptable for capacities less than 30 amperes, provided the ampere rating of the switch is at least 125 percent of the motor rating. Switches shall disconnect all ungrounded conductors.

3.14 TRANSFORMER INSTALLATION

Three-phase transformers shall be connected only in a delta-wye or wye-delta configuration as indicated. "T" connections may be used for transformers rated at 15 kVA or below. Dry-type transformers shown located within 5 feet of the exterior wall shall be provided in a weatherproof enclosure. Transformers to be located within the building may be provided in the manufacturer's standard, ventilated indoor enclosure designed for use in 40 degrees C ambient temperature, unless otherwise indicated.

3.15 LAMPS AND LIGHTING FIXTURES

Ballasted fixtures shall have ballasts which are compatible with the specific type and rating of lamps indicated and shall comply with the applicable provisions of the publications referenced.

3.15.1 Lamps

Lamps of the type, wattage, and voltage rating indicated shall be delivered to the project in the original cartons and installed in the fixtures just prior to the completion of the project.

3.15.1.1 Incandescent

Incandescent lamps shall be for 125-volt operation unless otherwise indicated.

3.15.1.2 Fluorescent

Fluorescent lamps for magnetic ballasts shall be as indicated and shall be of a type that will not require starter switches. Lamps shall be of the rapid-start type unless otherwise shown or approved. Fluorescent lamps for electronic ballasts shall be as indicated.

3.15.1.3 High-Intensity-Discharge

High-intensity-discharge lamps shall be the high-pressure sodium type unless otherwise indicated, shown, or approved.

3.15.2 Fixtures

Fixtures shall be as shown and shall conform to the following specifications.

3.15.2.1 Accessories

Accessories such as straps, mounting plates, nipples, or brackets shall be provided for proper installation. Open type fluorescent fixtures with exposed lamps shall have a wire-basket type guard.

3.15.2.2 Suspended Fixtures

Suspended fixtures shall be provided with swivel hangers in order to ensure a plumb installation. Pendants, rods, or chains 4 feet or longer excluding fixture, shall be braced to limit swinging. Bracing shall be 3 directional, 120 degrees apart. Single unit suspended fluorescent fixtures shall have twin-stem hangers. Multiple unit or continuous-row fluorescent units shall have a tubing or stem for wiring at one point, and a tubing or rod suspension provided for each length of chassis including one at each end. Maximum distance between adjacent tubing or stems shall be 10 feet. Rods shall be of not less than 3/16 inch diameter. Flexible raceway shall be installed to each fixture from an overhead junction box. Fixture to fixture wiring installation is allowed only when fixtures are installed end to end in a continuous run.

3.15.2.3 Ceiling Fixtures

Ceiling fixtures shall be coordinated with and suitable for installation in, on, or from the suspended ceiling provided under other sections of these specifications. Installation and support of fixtures shall be in accordance with the NFPA 70 and manufacturer's recommendations. Recessed fixtures shall have adjustable fittings to permit alignment with ceiling panels. Recessed fixtures installed in fire-resistive type of suspended ceiling construction shall have the same fire rating as the ceiling or shall be provided with fireproofing boxes having materials of the same fire rating as the ceiling panels, in conformance with UL Elec Const Dir. Surface-mounted fixtures shall be suitable for fastening to the structural support for ceiling panels.

3.15.2.4 Sockets

Sockets of industrial, strip, and other open type fluorescent fixtures shall be of the type requiring a forced movement along the longitudinal axis of the lamp for insertion and removal of the lamp.

3.15.3 Emergency Light Sets

Emergency light sets shall conform to UL 924 with the number of heads as indicated. Sets shall be permanently connected to the wiring system by conductors installed in short lengths of flexible conduit.

3.16 EQUIPMENT CONNECTIONS

Wiring not furnished and installed under other sections of the specifications for the connection of electrical equipment as indicated on the drawings shall be furnished and installed under this section of the specifications. Connections shall comply with the applicable requirements of paragraph WIRING METHODS. Flexible conduits 6 feet or less in length shall be provided to all electrical equipment subject to periodic removal, vibration, or movement and for all motors. All motors shall be provided with separate grounding conductors. Liquid-tight conduits shall be used in damp or wet locations.

3.16.1 Motors and Motor Control

Motors, motor controls, and motor control centers shall be installed in accordance with NFPA 70, the manufacturer's recommendations, and as indicated. Wiring shall be extended to motors, motor controls, and motor control centers and terminated.

3.16.2 Installation of Government-Furnished Equipment

Wiring shall be extended to the equipment and terminated.

3.17 CIRCUIT PROTECTIVE DEVICES

The Contractor shall calibrate, adjust, set and test each new adjustable circuit protective device to ensure that they will function properly prior to the initial energization of the new power system under actual operating conditions.

3.18 PAINTING AND FINISHING

Field-applied paint on exposed surfaces shall be provided under Section 09900 PAINTING, GENERAL.

3.19 REPAIR OF EXISTING WORK

The work shall be carefully laid out in advance, and where cutting, channeling, chasing, or drilling of floors, walls, partitions, ceiling, or other surfaces is necessary for the proper installation, support, or anchorage of the conduit, raceways, or other electrical work, this work shall be carefully done, and any damage to building, piping, or equipment shall be repaired by skilled mechanics of the trades involved at no additional cost to the Government.

3.20 FIELD TESTING

Field testing shall be performed in the presence of the Contracting Officer. The Contractor shall notify the Contracting Officer 10 days prior to conducting tests. The Contractor shall furnish all materials, labor, and equipment necessary to conduct field tests. The Contractor shall perform all tests and inspection recommended by the manufacturer unless specifically waived by the Contracting Officer. The Contractor shall maintain a written record of all tests which includes date, test performed, personnel involved, devices tested, serial number and name of test equipment, and test results. All field test reports will be signed and dated by the Contractor.

3.20.1 Safety

The Contractor shall provide and use safety devices such as rubber gloves, protective barriers, and danger signs to protect and warn personnel in the test vicinity. The Contractor shall replace any devices or equipment which are damaged due to improper test procedures or handling.

3.20.2 Ground-Resistance Tests

The resistance of each grounding electrode system shall be measured using the fall-of-potential method defined in IEEE Std 81. Soil resistivity in the area of the grid shall be measured concurrently with the grid measurements. Ground resistance measurements shall be made before the electrical distribution system is energized and shall be made in normally dry conditions not less than 48 hours after the last rainfall. Resistance measurements of separate grounding electrode systems shall be made before the systems are bonded together below grade. The combined resistance of separate systems may be used to meet the required resistance, but the specified number of electrodes must still be provided.

a. Single rod electrode - 25 ohms.

3.20.3 Ground-Grid Connection Inspection

All below-grade ground-grid connections will be visually inspected by the Contracting Officer before backfilling. The Contractor shall notify the Contracting Officer 72 hours before the site is ready for inspection.

3.20.4 Cable Tests

The Contractor shall be responsible for identifying all equipment and devices that could be damaged by application of the test voltage and ensuring that they have been properly disconnected prior to performing insulation resistance testing. An insulation resistance test shall be performed on all low and medium voltage cables after the cables are installed in their final configuration and prior to energization. The test voltage shall be 500 volts DC applied for one minute between each conductor and ground and between all possible combinations of conductors. The minimum value of resistance shall be:

R in megohms = (rated voltage in kV + 1) x 1000/(length of cable in feet)

Each cable failing this test shall be repaired or replaced. The repaired cable system shall then be retested until failures have been eliminated.

3.20.4.1 Medium Voltage Cable Tests

a. Continuity test.
b. Insulation resistance test.
c. DC high-potential test.

3.20.4.2 Low Voltage Cable Tests

a. Continuity test.
b. Insulation resistance test.

3.20.5 Motor Tests

a. Phase rotation test to ensure proper directions.
b. Operation and sequence of reduced voltage starters.
c. High potential test on each winding to ground.
d. Insulation resistance of each winding to ground.
e. Vibration test.
f. Dielectric absorption test on motor [and starter].

3.20.6 Dry-Type Transformer Tests

The following field tests shall be performed on all dry-type transformers .

a. Insulation resistance test phase-to-ground, each phase.
b. Turns ratio test.

3.20.7 Circuit Breaker Tests

The following field tests shall be performed on circuit breakers.

3.20.7.1 Circuit Breakers, Molded Case

a. Insulation resistance test phase-to-phase, all combinations.
b. Insulation resistance test phase-to-ground, each phase.
c. Closed breaker contact resistance test.
d. Manual operation of the breaker.

3.20.8 Motor Control Centers

a. Insulation resistance test phase-to-phase, all combinations.
b. Insulation resistance test phase-to-ground, each phase.
c. Manual and electrical operational tests.

3.21 OPERATING TESTS

After the installation is completed, and at such time as the Contracting

Officer may direct, the Contractor shall conduct operating tests for approval. The equipment shall be demonstrated to operate in accordance with the specified requirements. An operating test report shall be submitted in accordance with paragraph FIELD TEST REPORTS.

3.22 FIELD SERVICE

3.22.1 Onsite Training

The Contractor shall conduct a training course for the operating staff as designated by the Contracting Officer. The training period shall consist of a total of 16 hours of normal working time and shall start after the system is functionally completed but prior to final acceptance tests. The course instruction shall cover pertinent points involved in operating, starting, stopping, servicing the equipment, as well as all major elements of the operation and maintenance manuals. Additionally, the course instructions shall demonstrate all routine maintenance operations. A VHS format video tape of the entire training shall be submitted.

3.22.2 Installation Engineer

After delivery of the equipment, the Contractor shall furnish one or more field engineers, regularly employed by the equipment manufacturer to supervise the installation of equipment, assist in the performance of the onsite tests, oversee initial operations, and instruct personnel as to the operational and maintenance features of the equipment.

3.23 ACCEPTANCE

Final acceptance of the facility will not be given until the Contractor has successfully completed all tests and after all defects in installation, material or operation have been corrected.

-- End of Section --

SECTION 16475

COORDINATED POWER SYSTEM PROTECTION

PART 1 GENERAL

1.1 REFERENCES

The publications listed below form a part of this specification to the extent referenced. The publications are referred to in the text by basic designation only.

INSTITUTE OF ELECTRICAL AND ELECTRONICS ENGINEERS (IEEE)

IEEE C2	(1997) National Electrical Safety Code
IEEE Std 242	(1986; R 1991) IEEE Recommended Practice for Protection and Coordination of Industrial and Commercial Power Systems
IEEE Std 399	(1990) Recommended Practice for Industrial and Commercial Power Systems Analysis

NATIONAL ELECTRICAL MANUFACTURERS ASSOCIATION (NEMA)

NEMA AB 1	(1993) Molded Case Circuit Breakers and Molded Case Switches
NEMA SG 2	(1993) High Voltage Fuses
NEMA SG 3	(1995) Power Switching Equipment
NEMA SG 5	(1990) Power Switchgear Assemblies

NATIONAL FIRE PROTECTION ASSOCIATION (NFPA)

NFPA 70	(1999) National Electrical Cod

1.2 SUBMITTALS

Government approval is required for submittals with a "GA" designation; submittals having an "FIO" designation are for information only. The following shall be submitted in accordance with Section 01330 SUBMITTAL PROCEDURES:

SD-01 Data

Fault Current and Protective Device Coordination Study; GA.

The study along with protective device equipment submittals. No time extensions or similar contact modifications will be granted for work

arising out of the requirements for this study. Approval of protective devices proposed will be based on recommendations of this study. The Government shall not be held responsible for any changes to equipment, device ratings, settings, or additional labor for installation of equipment or devices ordered and/or procured prior to approval of the study.

Equipment Performance; GA.

Data consisting of manufacturer's time-current characteristic curves for individual protective devices, recommended settings of adjustable protective devices, and recommended ratings of non-adjustable protective devices.

Professional Engineer; FIO.

Verification of experience and license number, of a registered Professional Engineer with at least four years of current experience in the design of coordinated power system protection. Experience data shall include at least five references for work of a magnitude comparable to this contract, including points of contact, addresses and telephone numbers. This engineer must perform items required by this section to be performed by a registered Professional Engineer.

SD-06 Instructions

Preventive Maintenance and Inspection; FIO.

Data shall including calibration and testing procedures and instructions pertaining to the frequency of calibration, inspection, adjustment, cleaning, and lubrication.

Installation Procedures; FIO.

Procedures including diagrams, instructions, and precautions required to properly install, adjust, calibrate, and test the devices and equipment.

SD-09 Reports

Field Testing; FIO.

The proposed test plan, prior to field tests. Plan shall consist of complete field test procedure including tests to be performed, test equipment required, and tolerance limits, including complete testing and verification of the ground fault protection equipment, where used. Performance test reports in booklet form showing all field tests performed to adjust each component and all field tests performed to prove compliance with the specified performance criteria, upon completion and testing of the installed system. Each test report shall indicate the final position of controls.

SD-13 Certificates

Devices and Equipment; FIO.

Certificates certifying that all devices or equipment meet the requirements of the contract documents.

1.3 SYSTEM DESCRIPTION

The power system covered by this specification consists of: Secondary unit substation and associated distribution system and emergency power distribution system..

1.4 QUALIFICATIONS

1.4.1 System Coordinator

System coordination, recommended ratings and settings of protective devices, and design analysis shall be accomplished by a registered professional electrical power engineer with a minimum of two years of current experience in the coordination of electrical power systems.

1.4.2 System Installer

Calibration, testing, adjustment, and placing into service of the protective devices shall be accomplished by a manufacturer's product field service engineer or independent testing company with a minimum of two years of current product experience in protective devices.

1.5 DELIVERY, STORAGE, AND HANDLING

Devices and equipment shall be visually inspected when received and prior to acceptance from conveyance. Stored items shall be protected from the environment in accordance with the manufacturer's published instructions. Damaged items shall be replaced.

1.6 PROJECT/SITE CONDITIONS

Devices and equipment furnished under this section shall be suitable for the following site conditions:

1.6.1 Altitude

Altitude: 151 feet.

1.6.2 Ambient Temperature

Ambient Temperature: 90 deg. F.

1.6.3 Frequency

Frequency: 60 Hz.

1.6.4 Humidity Control

Humidity Control: 80 percent maximum

1.6.5 Ventilation

Ventilation: 6600 CFM.

1.6.6 Seismic Zone

Seismic Zone: 2A

1.7 EXTRA MATERIALS

The following spare fuses or spare fuse elements shall be delivered to the Contracting officer when the electrical system is accepted:

FUSE TYPE/CLASS	VOLTAGE	CURRENT	NO. OF SPARES
E	13.8 kV	175	6

PART 2 PRODUCTS

2.1 STANDARD PRODUCT

Protective devices and equipment shall be the standard product of a manufacturer regularly engaged in the manufacture of the product and shall essentially duplicate items that have been in satisfactory utility type use for at least two years prior to bid opening.

2.2 NAMEPLATES

Nameplates shall be provided to identify all protective devices and equipment. Nameplate information shall be in accordance with NEMA AB 1, NEMA SG 3, or NEMA SG 5 as applicable.

2.3 CORROSION PROTECTION

Metallic materials shall be protected against corrosion. Ferrous metal hardware shall be zinc or chrome-plated.

2.4 MEDIUM-VOLTAGE FUSES

2.4.1 General

Medium-voltage fuses shall conform to NEMA SG 2 and shall be distribution fuse cutouts or power fuses, E-rated, C-rated, or R-rated current-limiting fuses as shown.

2.4.2 Construction

Units shall be suitable for indoor use. Fuses shall have integral blown-fuse indicators. All ratings shall be clearly visible.

2.4.3 Ratings

Voltage ratings shall be not less than the applicable circuit voltage. Continuous-current ratings shall be as shown.

2.4.3.1 Fuse Cutouts

Medium-voltage fuses and cutouts shall comply with NEMA SG 2 and shall be of the loadbreak type construction rated 15 kV and of the heavy -duty type. Open-link cutouts are not acceptable. Fuses shall be either indicating or dropout type. Fuse ratings shall be as indicated. Fuses cutouts shall be equipped with mounting brackets suitable for the indicated installations.

2.5 COORDINATED POWER SYSTEM PROTECTION

Analyses shall be prepared to demonstrate that the equipment selected and system constructed meet the contract requirements for ratings, coordination, and protection. They shall include a load flow analysis, a fault current analysis, and a protective device coordination study. The studies shall be performed by a registered professional engineer with demonstrated experience in power system coordination in the last three years. The Contractor shall provide a list of references complete with points of contact, addresses and telephone numbers. The selection of the engineer is subject to the approval of the Contracting Officer.

2.5.1 Scope of Analyses

The fault current analysis, and protective device coordination study shall begin at: the source bus and extend down to system buses where fault availability is 10,000 amperes (symmetrical) for building/facility 600 volt level distribution buses.

2.5.2 Determination of Facts

The time-current characteristics, features, and nameplate data for each existing protective device shall be determined and documented. The Contractor shall coordinate with the USMA for fault current availability at the site.

2.5.3 Single Line Diagram

A single line diagram shall be prepared to show the electrical system buses, devices, transformation points, and all sources of fault current (including generator and motor contributions). A fault-impedance diagram or a computer analysis diagram may be provided. Each bus, device or transformation point shall have a unique identifier. If a fault-impedance diagram is provided, impedance data shall be shown. Location of switches, breakers, and circuit interrupting devices shall be shown on the diagram together with available fault data, and the device interrupting rating.

2.5.4 Fault Current Analysis

2.5.4.1 Method

The fault current analysis shall be performed in accordance with methods described in IEEE Std 242, and IEEE Std 399.

2.5.4.2 Data

Actual data shall be utilized in fault calculations. Bus characteristics and transformer impedance shall be those proposed. Data shall be documented in the report.

2.5.4.3 Fault Current Availability

Balanced three-phase fault, bolted line-to-line fault, and line-to-ground fault current values shall be provided at each voltage transformation point and at each power distribution bus. The maximum and minimum values of fault available at each location shall be shown in tabular form on the diagram or in the report.

2.5.5 Coordination Study

The study shall demonstrate that the maximum possible degree of selectivity has been obtained between devices specified, consistent with protection of equipment and conductors from damage from overloads and fault conditions. The study shall include a description of the coordination of the protective devices in this project. A written narrative shall be provided describing: which devices may operate in the event of a fault at each bus; the logic used to arrive at device ratings and settings; situations where system coordination is not achievable due to device limitations (an analysis of any device curves which overlap); coordination between upstream and downstream devices; and relay settings. Recommendations to improve or enhance system reliability, and detail where such changes would involve additions or modifications to the contract and cost damages (addition or reduction) shall be provided. Composite coordination plots shall be provided on log-log graph paper.

2.5.6 Study report

a. The report shall include a narrative describing: the analyses performed; the bases and methods used; and the desired method of coordinated protection of the power system.

b. The study shall include descriptive and technical data for existing devices and new protective devices proposed. The data shall include manufacturers published data, nameplate data, and definition of the fixed or adjustable features of the existing or new protective devices.

c. The report shall document existing power system data including time-current characteristic curves and protective device ratings and settings.

d. The report shall contain fully coordinated composite time-current characteristics curves for each bus in the system, as required to ensure coordinated power system protection between protective devices or equipment. The report shall include recommended ratings and settings of all protective devices in tabulated form.

e. The report shall provide the calculation performed for the analyses, including computer analysis programs utilized. The name of the software package, developer, and version number shall be

provided.

PART 3 EXECUTION

3.1 VERIFICATION OF DIMENSIONS

After becoming familiar with details of the work, the Contractor shall verify dimensions in the field, and shall advise the Contracting Officer of any discrepancy before performing any work.

3.2 INSTALLATION

Protective devices shall be installed in accordance with the manufacturer's published instructions and in accordance with the requirements of NFPA 70 and IEEE C2.

3.3 FIELD TESTING

3.3.1 General

Field testing shall be performed in the presence of the Contracting Officer. The Contractor shall notify the Contracting Officer 7 days prior to conducting tests. The Contractor shall furnish all materials, labor, and equipment necessary to conduct field tests. The Contractor shall perform all tests and inspections recommended by the manufacturer unless specifically waived by the Contracting Officer. The Contractor shall maintain a written record of all tests which includes date, test performed, personnel involved, devices tested, serial number and name of test equipment, and test results.

3.3.2 Safety

The Contractor shall provide and use safety devices such as rubber gloves, protective barriers, and danger signs to protect and warn personnel in the test vicinity. The Contractor shall replace any devices or equipment which are damaged due to improper test procedures or handling.

3.3.3 Molded-Case Circuit Breakers

Circuit breakers shall be visually inspected, operated manually, and connections checked for tightness. Current ratings shall be verified and adjustable settings incorporated in accordance with the coordination study.

3.3.4 Power Circuit Breakers

3.3.4.1 General

The Contractor shall visually inspect the circuit breaker and operate the circuit breaker manually; adjust and clean primary contacts in accordance with manufacturer's published instructions; check tolerances and clearances; check for proper lubrication; and ensure that all connections are tight. For electrically operated circuit breakers, the Contractor shall verify operating voltages on closing and tripping coils. The Contractor shall verify fuse ratings in control circuits; electrically

operate the breaker, where applicable; and implement settings in accordance with the coordination study.

-- End of Section --

SECTION 16710

PREMISES DISTRIBUTION SYSTEM

PART 1 GENERAL

1.1 REFERENCES

The publications listed below form a part of this specification to the extent referenced. The publications are referred to in the text by basic designation only.

ELECTRONIC INDUSTRIES ASSOCIATION (EIA)

EIA ANSI/TIA/EIA-568-A	(1995) Commercial Building Telecommunications Cabling Standard
EIA ANSI/TIA/EIA-569	(1996) Commercial Building Standard for Telecommunications Pathways and Spaces
EIA ANSI/TIA/EIA-606	(1993) Administration Standard for the Telecommunications Infrastructure of Commercial Building
EIA ANSI/TIA/EIA-607	(1994) Commercial Building Grounding and Bonding Requirem,ents for Telecommunications
EIA ANSI/TIA/EIA TSB-67	(1995) Transmission Performance Specifications for Field Testing Unshielded Twisted-Pair Cabling System

1.2 SYSTEM DESCRIPTION AND SCOPE OGF WORK

The premises distribution system shall consist of inside-plant horizontal, riser, and backbone cables and connecting hardware to transport telephone and data (including LAN) signals between equipment items in a building.

1.2.1 This specification and associated drawings identify the scope of work associated with the voice, data and CATV cabling for the West Point, Arvin Cadet Physical Development Center.

1.2.2 All telecommunications work shown in the drawings and this specification shall be included under the base bid, except where there is specific reference to exclusion and incorporation in other quotations.

1.2.3 It shall be clearly understood that the design presented in the drawings and specifications is to ensure that no single point of failure exists in the cabling system where diverse cable routes have been provided for. The contractor shall insure that this design is maintained and shall bring any potential discrepancies to the Contracting Officer's attention.

1.2.4 It is the purpose of these drawings and specifications to bid a complete, warranted cabling solution. Due to the nature of this project multiple manufacturer cable warranties may apply.

1.2.5 All cables, racks, cabinets, patch cords, cross-connects, ladder racks, outlets, documentation, etc. shall be provided by the Contractor as outlined in this specification and associated drawings unless stated otherwise.

1.3 SCHEDULE FOR COMPLETION

All telecommunications work shall be performed in accordance with the attached schedule. Work within IDF closets is required to be completed a minimum of 8 weeks prior to the move-in date. The minimum requirements for completion are as follows:

a. All vertical riser cables are pulled, terminated and tested.

b. All equipment racks and ladder racks are installed.

c. All network electronics (provided by others) are mounted (by others) and patched as specified by the Owner or his representative.

d. All termination blocks are installed, tested and labeled.

e. Ground bar connections are installed.

f. Floor and wall penetrations are firestopped.

g. All horizontal cabling to outlets mounted in drywall partitions are pulled, terminated and tested 8 weeks prior to the move-in date, minimum.

h. All horizontal cabling to flush floor mounted outlets and outlets mounted in furniture systems are pulled, terminated and tested 4 weeks prior to the move-in date, minimum.

1.4 ENVIRONMENTAL REQUIREMENTS

Connecting hardware shall be rated for operation under ambient conditions of 32 to 140 degrees F and in the range of 0 to 95 percent relative humidity, noncondensing.

1.5 QUALIFICATIONS

1.5.1 Minimum Contractor Qualifications

All work under this section shall be performed by and all equipment shall be furnished and installed by a certified Telecommunications Contractor, hereafter referred to as the Contractor. The Contractor shall have the following qualifications in Voive, Data and CATV Cabling installation:

a. Contractor shall have a minimum of 3 years experience in the application, installation and testing of the specified systems and equipment.

b. All supervisors and installers assigned to the installation of this system or any of its components shall have factory certification from each equipment manufacturer that they are qualified to install and test the provided products. General electrical trade staff (electricians) shall not be used for the installation of the premises distribution system cables and associated hardware.

c. All installers assigned to the installation of this system or any of its components shall have a minimum of 3 years experience in the installation of the specified copper and fiber optic cable and components.

d. Personnel trained and certified by the proposed manufacturer to install the proposed warranted cabling solution.

e. Demonstrate experience in installing a minimum of 2 cabling plants with sizes comparable with this project (500 workstations, minimum) completed within the last 36 months at a single site.

f. Certification in fiber optic splicing and connectorization techniques/technologies as well as certification by Lucent Technologies, Siecor or other approved manufacturer.

g. Personnel Trained in the use of fiber optic OTDR, OLS and mechanical splicing techniques.

h. Personnel trained in the installation of riser cable plant and experienced with cable support techniques, products and splicing techniques.

i. Demonstrate experience in the installation of outside plant fiber and copper cabling. This includes termination splicing and protection technique.

j. Experience in installation of coaxial cabling for the transmission of RF video signaling.

Proof of comparable installations is required. The Contractor shall provide documentation and references attesting to their ability to satisfy the following requirements.

a. Technical/Management Capability: The Contractor shall demonstrate technical qualifications and management capability to supply, install, test and support the installation and testing of the telecommunications cabling system.

b. Financial Capability: The Contractor shall present data to

demonstrate financial stability and performance during the last five (5) years.

c. Contractor Experience: The Contractor must demonstrate experience and capability in installation of systems of similar sized and scope as described in Item 1.2 above. The Contractor shall provide a list of customers for which similar systems were installed and suitable references with telephone numbers required.

d. Support and Services: The Contractor shall guarantee the availability of system hardware/software support, services, repairs, and spare parts for up to fifteen (15) years following system acceptance. The Contractor shall indicate the number of its trained service technicians in the New York area knowledgeable in the support/repair of the systems proposed.

e. The foreman assigned to this project shall be dedicated to the supervision of the cabling infrastructure and associated work only and shall share in no other responsibilities associated with this project (i.e. electrical foreman). If the electrical and cabling contractors are the same firm, a separate foreman shall be assigned to this project for the supervision of each discipline. The resume! and project experience of the proposed foreman/project manager shall be submitted for review and acceptance as part of the submission. The owner reserves the right to have a new foreman assigned to this project at any time during the project without explanation.

f. Qualified Personnel: The firm shall have at least one RCDD certified employee on staff.

1.5.2 Minimum Manufacturer Qualifications

The equipment and hardware provided under this contract will be from manufacturers that have a minimum of 3 years experience in producing the types of systems and equipment specified.

1.6 CODES, PERMITS AND INSPECTIONS

All telecommunications work shall meet or exceed the latest requirements of all national, state, county, municipal, and other authorities exercising jurisdiction over the telecommunications cabling work and the project.

All required permits and inspection certificates shall be obtained, paid for, and made available at the com-pletion of the telecommunications cabling work. In the event that no official authority exists which will issue a certificate attesting to the compliance of the communications installations, such a certificate shall be acquired from an independent agency selected by the Engineer. Inspection and certification fees levied by this agency shall be paid for as part of the telecommunications cabling work.

Any portion of the telecommunications cabling work which is not subject to the requirements of an electric code published by a specific authority

having jurisdiction shall be governed by the National Electrical Code and other applicable sections of the National Fire Code, as published by the National Fire Protection Association.

Installation procedures, methods and conditions shall comply with the latest requirements of the Federal Occupational Safety and Health Administration (OSHA).

All installations shall be in conformance with the latest revisions of EIA ANSI/TIA/EIA-568-A, EIA ANSI/TIA/EIA-569, EIA ANSI/TIA/EIA-606, EIA ANSI/TIA/EIA-607, as well as all associated technical systems bulletins (TSB's).

All work shall conform to the latest BICSI Standards.

1.7 DEFINITIONS AND INTERPRETATIONS

As used in the drawings and specifications for telecommunications work, certain non-technical words shall be understood to have specific meanings as follows regardless of indications to the contrary in the General Conditions or other documents governing the telecommunications work.

a. "Furnish" -- Purchase and deliver to the project site complete with every necessary appurtenance and support, all as part of the telecommunications work. Purchasing shall include payment of all sales taxes and other surcharges as may be required to assure that purchased items are free of all liens, claims or encum-brances. Payment of sales taxes is, however, specifically excluded.

b. "Install" -- Unload at the delivery point at the site and perform every operation necessary to establish secure mounting and correct operation at the proper location in the project, all as part of the telecommunications work.

c. "Provide" -- "Furnish" and "install."

d. "New" -- Manufactured within the past year and never before used.

Regardless of their usage in codes or other industry standards, certain words as used in the drawings or specifica-tions for the telecommunications work, shall be understood to have the specific meanings ascribed to them in the following list:

a. "Accessible Corridor" - A common horizontal pathway which can be approached or entered easily in which telecommunications cables are run until they branch out to individual workstation or equipment terminations.

b. "Alternate Routing" -- A feature which sends voice or data over a different route or line in the event of congestion or line failure.

c. "Assembly" -- A defined set of elements of telecommunications work.

d. "Authority Having Jurisdiction" -- The organization, office or

individual responsible for ?approving? equipment, an installation or a procedure.

e. "Availability" -- The degree to which a system or recourse is available.

f. "Backbone" -- A common distribution core which provides all electrical power, communications and other services to Telecommunications.
"Bundle" -- Shall refer to multiple cables of similar or dissimilar cable types, as specified. The cables shall be neatly placed and tie wrapped together. The bundle size shall be of practical and manageable proportions.

g. "Business Interruption" -- The effect on business operations from the time that equipment was initially lost or damaged until it has been restored to the former level of operation.

h. "Category 3, 4, 5" - Conforming to the guidelines issued as part of EIA/TIA-568A, and Bulletins TSB-36 and TSB-40.

i. "Category 5e" - Conforming to the guidelines issued as part of EIA ANSI/TIA/EIA 568-A-5.

	Link Performance Category 5e	Link Performance Category 6	Channel Performance Category 5e	Channel Performance Category 6
Attenuation (db)	2.1 @ 1MHz 6.3 @ 10MHz 21.6 @ 100MHz	2.1 @ 1MHz 6.2 @ 10MHz 20.7 @ 100MHz 30.4 @ 200MHz	2.1 @ 1MHz 6.3 @ 10MHz 21.6 @ 100MHz	2.2 @ 1MHz 6.4 @ 10MHz 21.6 @ 100MHz 31.8 @ 200MHz
Next (db)	64 @ 1MHz 45.5 @ 10MHz 29.3 @ 100MHz	73.5 @ 1MHz 55.5 @ 10MHz 39.3 @ 100MHz 34.3 @ 200MHz	63 @ 1MHz 44 @ 10MHz 27 @ 100MHz	71.2 @ 1MHz 54 @ 10MHz 37.1 @ 100MHz 31.9 @ 200MHz
PSNext (db)	60 @ 1MHz 49 @ 10MHz 32.3 @ 100MHz	71.2 @ 1MHz 57.8 @ 10MHz 41.9 @ 100MHz 36.9 @ 200MHz	60 @ 1MHz 47 @ 10MHz 30 @ 100MHz	72.7 @ 1MHz 56.6 @ 10MHz 39.9 @ 100MHz 34.8 @ 200MHz
ELFext (db)	61 @ 1MHz 41 @ 10MHz 21 @ 100MHz	65.2 @ 1MHz 45.2 @ 10MHz 25.2 @ 100MHz 19.2 @ 200MHz	59 @ 1MHz 39 @ 10MHz 19 @ 100MHz	63.2 @ 1MHz 43.2 @ 10MHz 23.2 @ 100MHz 17.2 @ 200MHz
PSELFext (db)	58 @ 1MHz 38 @ 10MHz 18 @ 100MHz	62.2 @ 1MHz 42.2 @ 10MHz 22.2 @ 100MHz 16.2 @ 200MHz	56 @ 1MHz 36 @ 10MHz 16 @ 100MHz	60.2 @ 1MHz 40.2 @ 10MHz 20.2 @ 100MHz 14.2 @ 200MHz
Propagation	<548	<548	<548	<548

	Link Performance Category 5e	Link Performance Category 6	Channel Performance Category 5e	Channel Performance Category 6
Delay (nSec)				
Delay Skew (nSec)	<45	<45	<45	<45
Return Loss (db)	17 (1 to 20MHz) 17-7log(f/20) (20 to 100MHz)	19 (1 to 20MHz) 19-10log(f/20) (20 to 200MHz)	17 (1 to 20MHz) 17-7log(f/20) (20 to 100MHz)	19 (1 to 20MHz) 19-10log(f/20) (20 to 200MHz)

Note: The requirements above are based on non-ratified drafts of proposed addendums to EIA ANSI/TIA/EIA 568-A.

j. "Circuit" -- Any specific run of circuitry.

k. "Circuitry" -- Any telecommunications work which consists of wires, cables, raceways, and/or specialty wiring method assemblies taken all together complete with associated junction boxes, pull boxes, outlet boxes, joints, couplings, splices and connections except where limited to a lesser meaning by specific description.

l. "Controlled Access Space" -- Space which is restricted to a specifically authorized group of people. Access is gained through the use of a magnetic card or keyboard.

m. "Concealed" (as applied to circuitry) -- Covered completely by building materials, except for penetrations (by boxes and fittings) to a level flush with the surface as necessitated by functional or specified accessibility requirements.

n. "Entrance Point" -- Point at which telecommunications cabling enters the building. Where cable enters in conduit that is buried in a concrete floor, the point at which the conduit emerges from the floor is considered the entrance point.

o. "Equipment Room" -- The enclosed area or room specifically designated for housing shared head-end equipment or resources.

p. "Exposed" (as applied to circuitry) -- Not covered in any way by building materials.

q. "IDF" -- Intermediate distribution frame.

r. "IDF Closet" -- See "Telecommunications Closet".

s. "Low Voltage" -- Below 50 volts.

t. "MDF" -- Main distribution frame.

u. "MDF Room" -- Composed of a single room which represents the head-end of the data center, telecommunications infrastructure. This room contains the MDF, PBX , UPS, routers, hubs, switches, servers, etc., which are used to support the telecommunications infrastructure.

v. "Normal Work Conditions" -- Locations within building confines which are neither damp, wet nor hazardous and which are not used for air handling.

w. "Patch Panel" -- A system of terminal blocks, patch cords, and backboards that facilitates administration of cross-connect fields for moves and rearrangements.

x. "Raceway" -- Any pipe, duct, extended enclosure, or conduit (as specified for a particular system) which is used to contain wires, and which is of such nature as to require that the wires be installed by a "pulling in" procedure.

y. "Riser" -- Shall refer to the portion of the installation that transmits between building floors (or between telecommunications rooms).

z. "Shall" -- Indicates a mandatory requirement.

aa. "Standard" (as applied to wiring devices) -- Not of a separ-ately designated individual type.

bb. "Station Cable" -- Shall refer to the portions of the cable installation that are installed between the telecommunications closets and the attachment points (stations) of end user equipment.

cc. "Subject to Mechanical Damage" -- Exposed within seven feet of the floor in mechanical rooms, manufacturing spaces, vehicular spaces, or other spaces where heavy items (over 100 pounds) are moved around or rigged as a common practice or as required for replacement purposes.

dd. "Telecommunications Closet" -- The enclosed area or room specifically designated for the routing, termination and/or cross-connecting of telecommunications cable (i.e., riser cable) to other telecommunications cable and/or equipment (i.e., workstation cables or concentrators). This may also be referred to as the telephone, communications or IDF closet.

ee. "Telecommunications Wiring" -- See Circuitry.

ff. "Telecommunications Work" -- All telecommunications cabling work as defined by these telecommunications drawings and specifications.

gg. "UPS" -- Uninterruptible Power Supply, an auxiliary power unit for telecommunication systems that provides continuous power in the event of a commercial power failure.

hh. "Wiring" -- Same as circuitry.

ii. "Workstation" or "Station" -- The location where voice and/or data users telecommunications equipment is provided for.

1.7.1 Where the word "conduit" is used without specific reference to type, it shall be understood to mean "raceway."

1.7.2 Reference to "U.L. (Materials Construction) Stan-dards" shall mean the "Standards for Safety," published by Underwriters Laboratories, Inc. (Main Office: 333 Pfingsten Road, Northbrook, Illinois 60062).

1.7.3 Reference to "NEMA Standards" shall mean the "Approved Standards" published by the National Electrical Manufacturers Association (Main Office: 2101 "L" Street, N.W., Washington, D.C. 20037).

1.7.4 Reference to "ANSI Standards" shall mean the stan-dards published by the American National Standards Institute (Main Office: Twenty East Fortieth Street, New York, New York 10016).

1.7.5 Reference to "EIA/TIA Standards" shall mean the standards published by the Electronic Industries Association and Telecommunications Industry Association, 201 Pennsylvania Avenue, N.W., Washington, D.C. 20006.

1.7.6 Reference to "IEEE Standards" shall mean the standards published by the Institute of Electrical and Electronics Engineers.

1.7.7 Reference to "BICSI Standards" shall mean the standards published by the Building Industries Consulting Service International c/o Testmark Laboratories, Publications Department, 3050 Harrodsburg Road, Lexington, KY 40503.

1.7.8 Reference to "REA Standards" shall mean the standards published by the Rural Electrification Administration.

1.7.9 Reference to "Bell Standards" shall mean the standards published by Bell Telecommunications Research, Incorporated.

1.7.10 Items and installation methods as described in the drawings and specifications for telecommunications work are to be used only under normal work conditions as hereinafter described unless there are specific notations to the contrary.

1.7.11 Except where modified by a specific notation to the contrary, it shall be understood that the indication and/or description of any telecommunications item in the drawings and speci-fications for telecommunications work carries with it the instruction to furnish, install and connect the item as part of the telecommunications work regardless of whether or not this instruction is explicitly stated.

1.7.12 It shall be understood that the specifications and drawings are complementary and are to be taken together for a complete interpretation of the telecommunications work. Where there are conflicts between the

drawings and specifications or within the specifications or drawings themselves. These items shall be brought to the engineers attention or the item of higher quality shall be provided.

1.7.13 To the extent that they govern the basic work, the specifications also govern change order work if any.

1.7.14 No exclusion from or limitation in, the symbolism used on the drawings for telecommunications work or the language used in the specifications for telecommunications work shall be interpreted as a reason for omitting the appurtenances or accessories necessary to complete any required system or item of equipment.

1.7.15 The drawings for telecommunications work utilize symbols and schematic diagrams which have no dimensional significance. The telecommunications work shall, therefore, be installed to fulfill the dia-grammatic intent expressed on the telecommunications drawings, but in conformity with the dimensions indicated on the final working drawings, field layouts and shop drawings of all trades.

1.7.16 Certain details appear on the drawings for telecommunications work which are specific with regard to the dimensioning and positioning of the telecommunications work. These are intended only for general information purposes. They do not obviate field coordination for individual items of the indicated work.

1.7.17 Information as to general construction and archi-tectural features and finishes shall be derived from structural and architectural drawings and specifications.

1.7.18 The use of words in the singular shall not be con-sidered as limiting where other indications denote that more than one item is referred to.

1.7.19 Ratings of devices, materials and equipment specified without reference to specific performance criteria shall be understood to be nominal ratings established by means of industry standard procedures.

1.7.20 It is the intent of the drawings and specifications to provide a complete operating telecommunications system. All telecommunications work necessary to provide such a system shall be performed. Any discrepancies shall be brought to the engineer's attention.

1.8 SUBMITTALS

Government approval is required for submittals with a "GA" designation; submittals having an "FIO" designation are for information only. The following shall be submitted in accordance with Section 01330 SUBMITTAL PROCEDURES:

SD-01 Data

Spare Parts; GA.

Lists of spare parts, tools, and test equipment for each different item of material and equipment specified, after approval of detail drawings, not later than 2 months prior to the date of beneficial occupancy. The data shall include a complete list of parts and supplies, with current unit prices and source of supply, and a list of spare parts recommended for stocking.

SD-04 Drawings

Premises Distribution System; GA.

Detail drawings including a complete list of equipment and material. Detail drawings shall contain complete wiring and schematic diagrams and other details required to demonstrate that the system has been coordinated and will function properly as a system. Drawings shall include vertical riser diagrams, equipment rack details, elevation drawings of telecommunications closet walls, outlet face plate details for all outlet configurations, sizes and types of all cables, conduits, and cable trays. Drawings shall show proposed layout and anchorage of equipment and appurtenances, and equipment relationship to other parts of the work including clearance for maintenance and operation.

Record Drawings and Documentation; GA.

As part of the required telecommunications work, a complete set of "as-built" or record telecommunications drawings shall be made up and delivered to the Engineer, as outlined below. The drawings shall show:

a. All telecommunications work installed exactly in accordance with the original design.

b. All telecommunications work installed as a modification or addition to the original design.

c. The dimensional information necessary to deline-ate the exact location of all circuitry and wiring runs which are so buried or con-cealed as to be untraceable by inspection through the regular means of access established for inspection and maintenance.

d. The numbering information for all communications raceways, junction boxes, etc. shall be performed in accordance with EIA/TIA 606 standards. All identification shall be reviewed by the Engineer prior to implementation.

e. The numbering information necessary to correlate all telecommunications items (or outlets for same) to the patch panel, end user or head end device to which they are connected.

The as-built drawings shall be produced using AutoCad version 14 design package.

Any and all costs for document conversion (if necessary), printing, etc., are the responsibility of the contractor.

One set of design drawings will be made available on AutoCad, version 14, for the exclusive purpose of producing "as-built" drawings. These documents remain the property of Cosentini Associates LLP and shall be used for no other purpose without expressed, written consent. The contractor shall assume all liabilities resulting from unauthorized modifications to the drawings.

Prior to developing any "as-built" drawings, the contractor shall coordinate with the Owner and Engineer the layering structure, colors, etc., of all CADD drawings.

"As-built" information submitted to the Engineer for approval shall contain the following:

a. CADD drawing files on CD Rom or other approved media.

b. One (1) reproducible drawing.

c. Two (2) prints.

In addition to drawing information, the contractor shall provide electronic copies of cross-connect information in Microsoft Excel or other approved software package, dated to indicate the latest revision. Any modifications to Owner/Engineer supplied cross-connect information shall be clearly indicated.

The information provided shall consist of the following elements, minimum:

a. Cable ID - It should be noted that every cable that is installed in this project shall have a unique cable identifier whether or not explicitly stated or identified by the Engineer. Where cable nomenclature does not exist or is unclear, it shall be brought to the Engineer?s attention and a suitable naming convention shall be established.

b. Number of jacks per workstation outlet.

c. Jack types.

d. Wiring Configuration.

e. Outlet number

f. Room location.

g. IDF/MDF closet from which the cable originates and terminates.

h. Block or patch panel ID and port number for cable terminations.

i. Rack or wallfield that house the termination hardware.

j. Building identification.

Information shall be provided for the following cabling installations, minimum:

a. Workstation cabling and terminations.

b. Riser cabling and terminations.

c. Inter-closet cabling and terminations.

d. Inter-building ties and terminations.

e. Inter-cabinet cabling and terminations - this includes any and all cabling installed by the contractor within and individual room (i.e. wallfield to rack ties, inter wallfield ties, rack to rack ties, etc.)

f. Patching installations performed by the cabling contractor - This includes voice and data cross-connects/patching.

The Contractor shall provide system drawings which include pin configurations, cable runs, terminal blocks, conduit, systems/materials, riser diagrams and workstation or other terminations. The Contractor shall keep all documentation current throughout the installation and build-out process. If changes occur which affect any documentation, the Contractor shall formally re-issue the affected documentation to the Owner or his representatives. All "built-out" documentation shall be furnished to the Owner and Engineer at the completion of the installation.

All manufacturer's product data including specifications and installation instructions will be provided to the Owner upon acceptance of the space by the Owner and Engineer.

SD-06 Instructions

Manufacturer's Recommendations; GA.

Where installation procedures, or any part thereof, are required to be in accordance with the recommendations of the manufacturer of the material being installed, printed copies of these recommendations, prior to installation shall be provided. Installation of the item will not be allowed to proceed until the recommendations are received and approved.

SD-08 Statements

Test Plan; GA.

Test plan defining the tests required to ensure that the system meets technical, operational and performance specifications, 60 days prior to the proposed test date. The test plan must be approved before the start of any testing. The test plan shall identify the capabilities and functions to be tested, and include detailed instructions for the setup and execution of each test and procedures for evaluation and documentation of the results.

Qualifications; GA.

The qualifications of the Manufacturer, Contractor, and the Installer to perform the work specified herein. This shall include proof of the minimum qualifications specified herein.

SD-09 Reports

Test Reports; GA.

Test reports in booklet form with witness signatures verifying execution of tests. Test results will also be provided on 3-1/2 inch diskettes in ASCII format. Reports shall show the field tests performed to verify compliance with the specified performance criteria. Test reports shall include record of the physical parameters verified during testing. Test reports shall be submitted within 7 days after completion of testing.

SD-13 Certificates

Premises Distribution System; GA.

Written certification that the premises distribution system complies with the EIA ANSI/TIA/EIA-568-A, EIA ANSI/TIA/EIA-569, and EIA ANSI/TIA/EIA-606 standards.

Materials and Equipment; GA.

Where materials or equipment are specified to conform, be constructed or tested to meet specific requirements, certification that the items provided conform to such requirements. Certification by a nationally recognized testing laboratory that a representative sample has been tested to meet the requirements, or a published catalog specification statement to the effect that the item meets the referenced standard, will be acceptable as evidence that the item conforms. Compliance with these requirements does not relieve the Contractor from compliance with other requirements of the specifications.

Installers; GA.

The Contractor shall submit certification that all the installers are factory certified to install and test the provided products.

SD-18 Records

Record Keeping and Documentation; GA.

Documentation on cables and termination hardware in accordance with EIA ANSI/TIA/EIA-606.

1.9 QUALITY ASSURANCE

All equipment and materials for permanent instal-lation shall be the products of recognized manufacturers and shall be new.

1.9.1 New equipment and materials shall:-

a. Be Underwriters Laboratories, Inc. (U.L.) labeled and/or listed where specifically called for, or where normally subject to such U.L. labeling and/or listing services.

b. Be clearly labeled identifying the transmission parameters specified (specifically with reference to category 5, 5e and 6 ratings).

c. Be without blemish or defect.

d. Be in accordance with the latest applicable standards.

e. Be products which meet with the acceptance of the Engineer.

All items of equipment or material of one generic type shall be the product of one manufacturer through-out unless otherwise noted.

It is the intent of these specifications that wherever a manufacturer of a product is specified, and the terms "other approved" or "or approved equal" or "equal" are used, the substituted item must conform in all respects to the specified item. Consideration will not be given to claims that the substituted item meets the performance requirements with lesser construction, functionality or voids manufacturers system warrantee requirements. Performance as delineated in schedules and in the specifica-tions shall be interpreted as minimum performance requirements. All proposed substitutions must be presented to the Owner/Engineer for review and approval as stipulated elsewhere.

Substituted equipment or optional equipment where permitted and approved, must conform to space requirements. Any substituted equipment that cannot meet space requirements, whether approved or not, shall be replaced at the Contractor's expense. Any modifications of related systems as a result of substitutions shall be made at the Contractor's expense.

Note that the approval of shop drawings, or other information submitted in accordance with the requirements hereinbefore specified, does not assure that the Engineer, Architect, or any other Owner's Representative, attests to the dimensional accuracy, dimensional suitability, the ability of the material or equipment involved or the mechanical performance of equipment. Approval of Shop Drawings does not invalidate the plans and specifica-tions if in conflict, unless a letter requesting such change is submitted and approved on the Engineer's letterhead.

Substitutions of Telecommunications materials for that shown on the schedules or designated by model number in the specifications will not be considered if the item is not a regular cataloged item shown in the current catalog of the manufacturer.

The contractor shall provide a complete fit-out of one (1) of the telecommunications IDF closets, for review by the engineer and Owner prior to continuing with the installation of other telecommunications closets and/or rooms. The fit-out shall include all cable terminations, blocks, patch panels, frames, labels, etc. Changes or adjustments required in

other telecommunications closets and/or rooms as a result of the review of the fit-out shall be the responsibility of the contractor. The engineer and the Owner shall be given a minimum of ten (10) days notice for the review of the closet.

The contractor shall provide a complete fit-out of a standard wall, furniture mounted, floor mounted and student desk workstation for review by the engineer and Owner. The workstation fit-out shall include all connectors, labeling, cable support, etc. Changes or adjustments required in other workstations as a result of the review of the fit-out shall be the responsibility of the contractor. The engineer and the Owner shall be given a minimum of ten (10) days notice for the review of the fit-out area. Text

1.10 DELIVERY AND STORAGE

Equipment delivered and placed in storage shall be stored with protection from the weather, humidity and temperature variation, dirt and dust or other contaminants.

1.11 OPERATION AND MAINTENANCE MANUALS

Commercial off the shelf manuals shall be furnished for operation, installation, configuration, and maintenance for all products provided as a part of the premises distribution system. Specification sheets for all cable, connectors, and other equipment shall be provided.

PART 2 PRODUCTS

2.1 MATERIALS AND EQUIPMENT

2.1.1 It is the intent of these drawings and specifications to bid a complete warranted cabling solution. Where necessary, multiple manufacturer cable warrantees may apply.

2.1.2 The contractor shall propose a solution based upon the a warranted cabling solution from one of the following approved manufacturers/manufacturer partnerships: Amp, Belden/Krone/Siecor, Lucent Technologies, Nordx/CDT, Ortronics/Berk-Tek or Siemons/CommScope. Other manufacturer?s solutions may be submitted if approved in writing by the Engineer.

2.1.3 Horizontal data workstation cabling and all associated components (i.e. jacks, faceplates, patch panels, patch cords, etc.) shall be products included in one of the following manufacturer's warranted solutions:

a. Amp - "Quantum" Cabling Solution

b. Belden/Krone/Siecor - "Symphony - K3 Level" Solution

c. Lucent Technologies - "GigaSPEED" Solution

d. Nordx/CDT - "IBDN 2400" Series Solution

e. Ortronics/Berk-Tek - "Giga-Mo" Solution

f. Siemons/CommScope - "System 6" Solution

g. Leviton - "Extreme" Solution.

h. Hubbell - "Nextspeed" Solution.

2.1.4 Horizontal voice workstation cabling and jacks shall be products of the same manufacturer as is proposed for horizontal data workstation cabling. Voice jacks at the workstation end shall be compatible with the same device plate used for the data jacks. Both voice jacks and data jacks shall be housed in a single device plate unless otherwise noted.

2.1.5 Copper riser cabling shall be the product of Lucent Technologies or Nordx/CDT. Other manufacturer?s copper riser cabling may be submitted if approved in writing by the Engineer. Where applicable, the copper riser cabling shall be incorporated into the manufacturer's warranted solution that is proposed for the horizontal cabling or warranted separately by the manufacturer. If not incorporated into another warrantee, the fiber optic riser system shall be covered by a separate manufacturer's warrantee.

2.1.6 Fiber optic riser cabling and all associated components (i.e. connectors, couplers, patch panels, patch cords, etc.) shall be the products of Amp, Berk-Tek, CommScope, Lucent Technologies, Nordx/CDT or Siecor. Other manufacturer's fiber optic cabling and products may be submitted if approved in writing by the Engineer. Where applicable, the fiber optic products selected shall be incorporated into the manufacturer's warranted solution that is proposed for the horizontal cabling. If not incorporated into another warrantee, the fiber optic riser system shall be covered by a separate manufacturer's warrantee.

2.2 SERVICE ENTRANCE TERMINATION AND PROTECTION

2.2.1 The building has one service entrance rooms for the termination and protection of outside services.

2.2.2 It is the telecommunications contractor's responsibility to coordinate with the individual vendors terminating within the service entrance room and extending service to elsewhere within the building for cable routing and termination locations where it may affect work outlined in the specification.

2.2.3 Outside cabling shall extend into the building entrance facility not more than 50 feet without termination, protection and/or grounding, unless specifically stated otherwise.

2.2.4 Building entrance telecommunications circuits shall be protected in accordance with Article 800 of the National Electrical Code, the best industry practice and as outlined in this specification.

2.2.5 A distance of six (6) feet, minimum shall be maintained between any communication circuits and any lightning conductors.

2.2.6 All building entrance cables shall be spliced to the building entrance protector unit fusible links using an approved splice chamber.

2.2.7 Under no circumstances shall a building be served from a protector located in a different building whether or not the cable between the buildings is run exposed.

2.2.8 The building entrance protector units shall be located so as to minimize the length of the drop conductors or the line side of the protectors.

2.2.9 All plug-in protector units shall be provided with the following minimum features:

a. A permanent short circuit to ground shall result when high voltage or current is present.

b. They shall be provided with a five pin footprint design. All pins shall be gold plated.

c. All units shall be coded by color and symbol for easy identification.

d. They shall be available with overvoltage/sneak protection (where specified).

2.2.10 All building entrance protectors shall be provided with the following minimum features:

a. Insertion of the plug-in protector units into the building entrance protectors completes the circuit and provides protection. Removal of the plug-in protector units creates an open circuit.

b. A fusible link is provided which is a minimum of two gauges smaller in diameter than the conductors of the cable being protected.

c. Built-in features to ensure against protector bypass.

d. Available in top or bottom feed.

2.2.11 All plug-in protector units shall be provided with overvoltage protection.

2.3 SPLICING THE CONDUCTORS OF WIRES AND CABLES

2.3.1 All building entrance copper cables shall be spliced to the fusible links of the building entrance protectors.

2.3.2 All splices shall take place in an approved splice chamber with all applicable accessories.

2.3.3 Splice chamber endplates shall be sized for the proper quantity of

cables passing through and the cable diameter any excess openings shall be filled using blank plugs.

2.3.4 A bonding clamp shall be provided as part of the splice chamber for grounding of the cable shield. This shall be tied to the nearest designated grounding point using a #6 AWG insulated conductor. The ground conductor insulation shall be green.

2.3.5 Where required, cable splicing shall be performed in manholes designated for telecommunications cabling only. Handholes shall not be used for cable splicing.

2.3.6 All splicing, bonding, splice enclosures, etc., shall be in accordance with Bell System and REA specifications.

2.3.7 All splice enclosures shall be clean and free of cracks or other defects and shall be water tight.

2.3.8 All cables shall be spliced pair 1 to pair 1, tip to tip, ring to ring, etc.

2.3.9 In splice enclosures, the electrical path between shields shall be carried through the splice by use of bonding clamps and a ground strap. The ground connection between shields shall be insulated whenever it can contact the cable connectors or other ground connections.

2.4 INSTALLING CABLES IN UNDERGROUND CONDUIT BANKS

2.4.1 The telecommunications work required in conjunction with underground conduit banks shall include:

a. Wire and cable as indicated.

2.4.2 Cables shall be installed without splices.

2.5 BACKBONE SYSTEMS

2.5.1 The backbone systems, are composed of the following:

a. wisted pair copper riser system.

b. Fiber optic riser system.

c. CATV Riser System.

2.5.2 The twisted pair copper riser system shall consist of #24 AWG un-shielded twisted pair (UTP) cable manufactured specifically for riser applications and shall be Category 3 rated, minimum.

2.5.3 The twisted pair copper riser cabling shall be grey jacket color, and terminated on wall mounted termination blocks unless specified otherwise.

2.5.4 All copper riser cables shall comply with NEC section 800 and shall

be CMR rated minimum unless required otherwise.

2.5.5 The fiber optic riser systems shall consist of 24 strands 62.5/125 um, 1300 nm multimode (MM) and 12 strands singlemode (SM) fiber optic cable (FOC). The cable shall contain no metallic elements and shall be manufactured specifically for riser applications.

2.5.6 Fiber optic riser cables shall be fluorescent orange in color, shall comply with NEC section 770 and shall be OFNR rated minimum unless required otherwise.

2.5.7 All fiber optic riser cables shall be run in inner-duct except where they run vertically in the IDF closet and are required to be secured for vertical support.

2.5.8 Riser cables shall be installed as indicated on the drawings. All work shall be in accordance with standards identified in this specification and industry standards.

2.6 WORKSTATION CABLING

2.6.1 Workstations may be describes as one of the following:

a. Standard Workstation
b. Telephone Only Workstation
c. CATV Workstation

2.6.2 A standard workstation shall consist of the following: (each workstation to be provided with a 12 position multimedia outlet box).

a. One (1) enhanced category 5 (Cat 5E) unshielded twisted pair cable for voice (4 twisted pair, #24 AWG). The voice cable shall be terminated onto one 8-position, 8 conductor unkeyed RJ-45 jacks conforming to the 568A wiring scheme on the workstation end and shall be punched down on 110 blocks in the IDF.

b. Two (2) enhanced category 5 unshielded twisted pair cables for data (4 twisted pair, #24 AWG). Each data cable shall be terminated on a single 8-position, 8-conductor unkeyed RJ-45 jack, conforming to the 568A wiring scheme, at the workstation end and shall be punched down on patch panels in the IDF.

c. One two-strands multimode fiber optic cable terminated using ST type connectors.

d. One (1) RG-6 quad shielded coaxial cable. The cable shall be terminated at the workstation end using an F-type coaxial connector, mounted in an individual single gang faceplate. The cable shall be home-run from the workstation location to the designated area within the IDF closet. The cable shall be terminated with an F-type coaxial connector. Each cable shall be neatly dressed with a 6' service loop, minimum. Final connection of the cable to the riser hardware shall be by others.

2.6.3 A telephone only workstation shall consist of the following:

a. One (1) enhanced category 5 (Cat 5E) unshielded twisted pair cable for voice (4 twisted pair, #24 AWG). The voice cable shall be terminated on a single 8-position, 8-conductor unkeyed RJ-45 jack conforming to the 568A wiring scheme on the workstation end and shall be punched down on 110 blocks in the IDF.

2.6.4 Workstation cabling may terminate in one of the following locations:

a. Wall mounted box.

b. Furniture mounted raceway.

c. Surface mounted raceway or junction box.

2.6.5 Workstation cabling containing multiple cables under a single cable identification shall be considered a single entity even though it may emanate or terminate in more than one termination block, patch panel or faceplate.

2.6.6 Each cable in a standard workstation shall be identified with the same cable ID and a unique identification sub-number for the particular cable.

2.6.7 Cabling to wall mounted workstation outlets shall terminate in a double gang box. Cabling shall be routed through concealed raceways within drywall partitions. All necessary protection for the cable shall be provided by the communications contractor. The contractor shall provide the necessary connectors under a single faceplate as specified elsewhere. The type of faceplate to be used shall be coordinated with the architect for color, finish, etc.

2.6.8 The contractor shall ensure that all cable terminations (both front and rear) are easily accessible and are not obstructed by equipment, framing, outlet boxes, etc.

2.6.9 Workstation faceplates shall be modular accepting a variety of termination type jacks. Where jack ports are unused, black inserts shall be provided. Each faceplate shall have an area designated for locating the workstation ID as designated elsewhere. Where available, this shall be provided under a clear plastic cover. Where also available, the faceplates shall be fully populated with icons of type and color as designated by the Owner.

2.6.10 All labels including individual port terminations shall be easily visible from within three (3) feet of the terminating device and shall be unobstructed.

2.6.11 For twisted pair cabling, the contractor shall maintain the minimum number of twists per foot as prescribed for the particular cable. The twists shall be maintained to within 0.5" of the cable termination. No more than 1" of cable shall be unsheathed at the cable termination.

2.6.12 Voice cable jacket and jacks shall be green in color.

2.6.13 Data port #1 cable jacket and jacks shall be yellow in color. Data port #2 cable jacket and jacks shall be red in color.

2.6.14 All twisted pair cables shall terminate in vapor tight, insulating displacement type connectors (IDC). The contractor shall confirm that sufficient space exists within the outlet box/raceway and that strain relief is provided for all cable terminations.

2.6.15 All cable terminations, without exception, shall be provided with strain relief such that pulling on the cable jacket does not affect cable terminations.

2.7 INTER-RACK CABLING

2.7.1 Inter-rack cabling shall be provided within IDF closets, and equipment rooms as indicated on the drawings and elevations and/or as outlined in this specification.

2.7.2 All inter-rack cabling shall conform with installation and termination standards and criteria as outlined elsewhere in this specification.

2.7.3 All inter-rack cabling shall be run along ladder rack/cable tray above or neatly dressed along equipment frames to the main patching/cross-connect frame.

2.8 CROSS-CONNECTS AND PATCH CORDS

2.8.1 All voice ports for all workstations shall be cross-connected to the voice riser, using cross-connect wire of the same gauge as the workstation cable. Cross-connects shall be as directed by the Owner or his representative after equipment vendor selection. The Contractor shall provide 4 pair cross connects between horizontal wiring and riser cable within the IDF Closets.

2.8.2 A mounting bracket shall be provided at upper left hand corner of the wall field for mounting cross-connect spools. The spools shall be positioned to allow cross-connect wire to be pulled across the face of the wall field and be terminated.

2.8.3 All data ports for all workstations shall be cross-connected to rack mounted network hubs/switches, using patch cords of the same quality as the workstation cabling. Patching shall be as directed by the Owner or his representative after equipment vendor selection.

2.8.4 Provide a quantity of patch cords equal to 1.5 times the number of standard workstations for patching between patch panels and network equipment within the IDF closet. Patch cords within the IDF closets shall be provided in the following lengths:

Length	Percentage

4'	35%
6'	35%
10'	25%
15'	3%
25'	2%

2.8.5 Provide a quantity of patch cords equal to 1.5 times the number of standard workstations for patching between the workstation outlet and the end user equipment. Patch cords at the workstation shall be provided in the following lengths:

Length	Percentage
6'	80%
10'	15%
15'	5%

2.8.6 Patch cords shall be RJ45 to RJ45 Category 5 568A Wiring Standard, and shall be factory manufactured and certified to comply with the category 5 specifications. The patch cords shall be 4 pair each and shall be installed as specified by the Owner or his representative.

2.8.7 All patch cord RJ Type connectors shall be of the snagless type and shall be provided with color coded boots or reusable identifiers as directed. Each patch cord shall be provided with a unique identifier indicated at each end, minimum.

2.8.8 All patching shall be performed from left to right, top to bottom, starting in the upper left hand corner of the termination blocks for all 110 Type termination blocks.

2.8.9 Patch cord color shall be as identified by the Owner. A choice of patch cord color selections shall be provided to the Owner for selection prior to ordering of the patch cords.

Prior to purchasing patch cords, all cable colors and lengths shall be confirmed with the Owner. It shall be understood that the quantities presented above represent an allocation which can be reconfirmed by the Owner prior to purchase.

2.8.10 Cross-connects and patching connection records shall be provided by the contractor as specified elsewhere.

2.8.11 All cross-connects shall be neatly dressed and tied using color coded Velcro cable ties. Patching shall be performed so as to ensure the ability to easily read and access patch panel port identification.

2.8.12 Patch cords shall be provided in varying lengths as indicated above to ensure a neat and organized installation. The maximum lengths for patch cord combined lengths on a single circuit shall conform to EIA/TIA-568A. based on the patch cord allowance indicated above, the Owner and Engineer reserve the right to modify the patch cord lengths provided to ensure a neat and orderly installation. The cabling contractor shall make recommendations as to the required patch cord lengths to meet these

objectives.

2.9 PATCH PANELS

2.9.1 Patch panels shall be standard 19" rack mountable unless specified otherwise. Where directed to be placed in cabinets or frames with 23" wide mounting rails, they shall be provided with reducing brackets for mounting.

2.9.2 Patch panels shall be labeled in the front and rear with the port number and cable ID.

2.9.3 All cables terminated on the rear of patch panels shall be provided with strain relief brackets manufactured specifically for that function.

2.9.4 All patch panels shall be rated to the same transmission quality as the cables which they terminate.

2.9.5 Each patch panel installed shall be provided with horizontal wire management panels mounted integral to or above and below the patch panel unless indicated otherwise.

2.9.6 A horizontal wire management panel shall be provided above and below for each hub or switch located in the IDF and MDF rooms.

2.9.7 All patch panels shall be grounded in accordance with requirements listed elsewhere in this specification.

2.9.8 All patch panels which accept icons, labels or other appurtences shall be fully populated with said items regardless of whether or not it is specifically stated elsewhere. All icons, identification and color selections shall be as selected by the Owner

2.9.9 All RJ-45 patch panels shall conform to the 568A wiring scheme, unless otherwise noted.

2.10 TERMINATION BLOCKS

2.10.1 For wall mounted termination blocks, a three (3) foot clear work space shall be maintained in front of the entire area containing the blocks. This shall be coordinated with all other trades.

2.10.2 Color coding of termination blocks shall be performed by making the block label strip the designated color.

2.10.3 All cabling run to wall mounted termination blocks or patch panels shall be concealed in front of plywood backboards provided specifically for this purpose.

2.10.4 Plugs shall be inserted into termination blocks identifying all bad pairs.

2.10.5 The provision of termination blocks shall be understood to include all components necessary to make the block fully functional and identified whether or not cabling is designated as being terminated. This includes

but is not limited to the block, termination clips, label strips, label holders, etc.

2.10.6 Connecting blocks for 110 type termination hardware shall be four pair when terminating 4 pair cablings and shall be five pair for all other cabling unless otherwise noted.

2.11 EQUIPMENT RACKS AND FRAMES

2.11.1 Free standing frames (racks) shall be 19" wide, 6" deep, and 7' high unless specified otherwise. They shall be provided with a standard top angle and self supporting base. Side rails shall be pre-drilled and tapped in accordance with the EIA 19" mounting standard.

2.11.2 Double sided vertical wire management troughs shall be provided between racks and on the ends of frame line as indicated on the drawings. This shall be no less than 24 sq. inches.

2.11.3 Racks are to be mounted three (3) feet minimum from every interior wall. Clearance between rows of racks shall be no less than four (4) feet.

2.11.4 Cable runs to racks and frames which terminate at the rear of patch panels and other devices shall be run at the rear of double sided vertical wire management trough. Patch cords and other cable runs which terminate on the front of the frame shall run at the front of the double sided vertical wire management trough and be secured with color coded velcro cable ties. Cable distribution shall be routed evenly along both rails to the maximum extent possible.

2.11.5 For free standing frames, a three (3) foot clear work space shall be maintained in front and back of the frame and at one end of the frame line-up. Where space permits a space of three (3) shall be maintained at both ends of the frame line-up.

2.11.6 Free standing frames shall be securely bolted in place.

2.11.7 Cabling for connection to frame mounted patch panels and equipment shall be dressed such that the labeling of the patch panels and/or equipment is readily visible and access to said items is not obstructed. Where accessories for managing cable in the rear of the patch panel are available, they should be provided whether or not explicitly stated.

2.11.8 Where access to free standing frames is provided from cable tray mounted above, Kindorf extensions shall be provided from the frame side members to the cable tray for supporting cable runs (where necessary).

2.11.9 Each frame shall be provided with an equipment ground assembly.

2.11.10 Horizontal wire management panels shall be provided as indicated on the drawings to ensure a neatly dressed installation.

2.11.11 All racks shall be provided with 15 amp plug strips with outlets 6" on center as indicated on the drawings. The plug strips shall be no more than six feet high and shall be mounted to the side or rear of the

rails using stand-off brackets to maximize space for routing communications cabling.

2.12 CABINETS AND ENCLOSURES

2.12.1 When fed from above, two holes (4" inside diameter) shall be provided in the top back corner of the equipment cabinet. The opening shall be provided with a non-conducting grommet so as to protect the cable from any sharp edges.

2.12.2 Cabling run in equipment cabinets shall be routed vertically and horizontally in a squared-off manner. The cables shall be secured to the cabinet framing members with color coded Velcro cable ties. All cables connected to an item of equipment or patch panel shall approach the device from the door hinge side of the cabinet (i.e., right or left). The cables shall be neatly bound and dressed.

2.12.3 Sufficient slack shall be left on cables in equipment cabinets to allow a device to be relocated anywhere within the cabinet.

2.12.4 Cabinets shall be of a standard 19" or 23" mounting dimension as directed and shall be 77" high by 30" deep. They shall be provided with a lockable smoked plexi-glass front door, a lockable metal vented rear door and top mounted fan. The doors should be easily removable without the use of tools. A grounding kit shall be provided for grounding all metal portions of the cabinet. A minimum of two (2) fixed shelves supported from (4) mounting rails shall be provided as part of the cabinet unless specified otherwise. Vented metal sides shall be provided for each side of a cabinet. No sides are required between cabinets mounted side by side. Two 6' 15 amp plug strips with outlets mounted 6" on center shall be provided as part of the cabinet. The plug strips shall be mounted in the rear of the cabinet.

2.12.5 Cables run between cabinets shall be run via cable tray above.

2.12.6 All cabling run vertically within cabinets shall be neatly dressed and secured to the vertical side rails using cable support rings (D-Rings) spaced 8" on center maximum (unless specified otherwise). D-Rings shall have a minimum cross-sectional area of 18 sq. in.

2.12.7 A minimum of 3'-0" clear shall be maintained in front and behind cabinets. Cabinet doors shall open toward the nearest wall when the cabinet is located within 5'-0" of the wall. Coordinate with all other trades.

2.12.8 All cabinets shall be bolted securely to the slab.

2.12.9 Cabinets shall be Schroff, Rittal, EMP or other approved equal.

2.13 FIBER OPTIC CABLE SYSTEMS

2.13.1 All fiber optic cable shall be multimode, graded-index optical fiber waveguide with nominal 62.5/125m core/cladding diameter. The fiber shall meet or exceed EIA/TIA - 568A specifications.

2.13.2 The fiber optic cable shall contain the following minimum transmission performance parameters:

Wavelength (nm)	Maximum (dB/Km)	Minimum Information Transmission Capacity (MHz.Km)
850	3.75	160
1300	1.5	500

Operating Temperature: -40EF to 170EF (-40E to 77EC)

2.13.3 The total optical attenuation through the cross-connect from any terminated fiber to any other terminated fiber shall not exceed 1. dB.

2.13.4 No fiber optic cable shall be run unprotected. Fiber optic cable shall be protected as follows:

Location	Method of Protection
Accessible ceiling spaces	Innerduct (plenum as required)
Non-accessible ceiling spaces	Conduit
Exposed	Conduit
Within cabinets and on racks	Innerduct or spiral wrapped buffer tubes

2.13.5 Innerduct used for fiber optic cable shall be corrugated and bright orange or white in color.

2.13.6 All raceways containing fiber optic cable shall be provided with a label "Caution - Fiber Optic Cable" located on the raceway every 30 feet, minimum.

2.13.7 All fiber optic cable shall be terminated in ST epoxy type ceramic connectors. The connectors shall sustain a minimum of 1000 mating cycles without violating the specification requirements. The maximum optical attenuation per each mated connector pair shall not exceed 0.5 dB.

2.13.8 All fiber optic patch panels shall be front and rear accessible where rack or cabinet mounted or front accessible with side out shelving where wall mounted. They shall have cable guides for routing of cable within the patch panel housing. They shall have labels clearly identifying each cable termination.

2.13.9 All fiber optic cables shall be provided with strain relief where they enter patch panel housings.

2.13.10 The end of the fiber optic cable shall be dressed with shrink wrap tubing where cable strands exit the jacket.

2.13.11 All fiber optic cables shall be direct terminated. No splicing is permitted without prior review by the Engineer.

2.13.12 Fiber optic cable housings shall be provided for securing the excess cable for fiber optic patch cords. Fiber optic patch cords shall be concealed to the maximum extent possible.

2.13.13 All fiber optic cable shall be installed in a neatly dressed and organized manner. It shall be the contractors responsibility to maintain all recommended minimum bend radii. Any cables not conforming shall be removed and corrected at the contractors expense.

2.14 LADDER RACK

2.14.1 Ladder rack shall be made of straight sections, fittings and accessories as defined in the latest NEMA standards publication VE-1 and shall be UL classified as equipment grounding conductors.

2.14.2 Ladder rack material shall be steel tubular bar with baked enamel finish.

2.14.3 Ladder rack shall be of the ladder type and shall consist of cross-members (3/8"H x 1-1/2"W), spaced 9" on center, which are welded to the inside of side bars (1-1/2"H x 3/8"W).

2.14.4 Lengths shall be from 4'-5-1/2" to 9'-11", not including connectors, if attached.

2.14.5 Widths shall be 12", 18" or 24", as indicated on the drawings.

2.14.6 All ladder rack shall be joined at all crossings, intersections, angles, etc. using approved couplers, brackets and splices manufactured for this purpose. Straight sections shall be fastened together using a matching butt-splice kit.

2.14.7 Provide cable spill-outs ("waterfalls") at the location of each vertical wire management trough and wherever cable is routed from the ladder rack to the equipment below.

2.14.8 Special accessories shall be provided as required to protect, support and install a complete ladder rack system.

2.14.9 Install the ladder rack so that there is a minimum of 6" clearance above the side rails. Installation shall be such that cables may be laid directly onto the rack in lieu of pulling.

2.14.10 Support ladder rack in accordance with all applicable standards and best industry practices.

2.14.11 Provide a connection from the ladder rack to the telecommunication ground bar (TGB). Install ladder rack so as to insure

ground continuity for the entire assembly. Provide ground straps at all expansion fittings.

2.15 TELEPHONE HANDSETS AND RELATED ITEMS

Provide a quantity of one-hundred (100) Lucent Technologies Model 2500 YMGM telephone #3101-KFDA feature desk type handsets. Each shall include the handset itself, its associated cradle base, its handset coil cord, and a cradle base cord to connect the handset to the wall outlet jack.

Provide a quantity of one-hundred (100) Lucent Technologies Model 2554 MMGM telephone #3101-FBWA basic wall type handsets. Each shall include the handset itself, its associated cradle base, and its handset coil cord.

PART 3 EXECUTION

3.1 IDENTIFICATION AND TAGGING FOR TELECOMMUNICATIONS DEVICES:

3.1.1 Identify individually:-

a. Each and every telecommunications cable.

b. Each fiber optic cable and fiber strand.

c. Each outlet (and each port).

d. Each termination block and patch panel (and each termination -- front and rear as applicable).

e. Each equipment termination frame and cabinet.

f. Each raceway and junction box used for telecommunications wiring.

g. Each system (i.e., PBX, LAN, etc.).

h. Other items as directed.

3.1.2 The nomenclature used to identify cables, blocks, equipment, etc. shall be as specified by the Owner or Engineer on the drawings or elsewhere in this specification and shall be considered the minimum labeling requirement. Missing or unclear nomenclature criteria for the items specified above shall not be construed as a reason not to identify the items and shall be brought to the Engineers attention.

3.1.3 All materials required for labeling shall be provided by the contractor. All labels shall be permanently adhered, easily visible and shall be smudge-proof. All text shall be typed (not handwritten). All cables shall be labeled at both ends minimum.

3.1.4 Labels for faceplates, workstation outlets, etc. shall consist of the workstation ID and port identification or function, minimum. The workstation ID shall be by means of an adhesive label with 1/4" high letter which contrasts with the plate finish so it can be easily read. Icons and

other accessories shall be fully populated where applicable and as designated by the Owner.

3.1.5 Identification of all equipment, racks, backboards, patch panels, systems, etc. shall be by means of engraved lamacoid nameplates showing 1/2" high white lettering on a black background fastened in the upper left hand corner of all equipment (unless specified otherwise) and the center of all racks, cabinets and wall fields. An attempt shall be made to place the label in the same location on similar equipment.

3.1.6 Identification for the wires and cables shall be by means of wrap around "brady" type labels.

3.1.7 Labels for risers, cables, wires, faceplates, cover plates, etc., shall be provided with bar coding in addition to any textual descriptions provided. The bar coding shall contain the textual information in bar code format. It shall be the contractors responsibility to ensure that both the text and bar codes are visible, even if two labels are required.

3.1.8 Device plates for patch panels, miscellaneous termination hardware, electronic equipment (i.e., controllers, multiplexers, etc.) whose function is not readily apparent shall be engraved with 1/4" high letters suitably describing the equipment controlled or system served (i.e., Dictaphone, Token Ring, Ethernet, etc.)

3.1.9 Identify each outlet box, junction box, and cabinet used in conjunction with empty raceway for wires of a future system by means of indelible markings on the inside denoting the system.

3.1.10 Prior to installing identifying tags and nameplates, submit their nomenclature for approval. Conform to all re-visions issued by the Architect and/or Engineer.

3.1.11 Junction boxes used for telecommunications wiring and located in unfinished spaces (i.e., hung ceilings, equipment rooms, etc.) shall be clearly identified on the outside as per EIA/TIA-606 Standards or with the designation "COMM" unless specified otherwise.

3.1.12 All labeling and identification information shall be provided as part of the record drawing as specified elsewhere.

3.1.13 All labeling on this project shall be coordinated with DASNY?s cable management effort and criteria.

3.2 FIRE-STOPPING

3.2.1 Firestopping shall be provided for all penetrations of conduit, wireways, bus ducts, cable trays, etc., through fire-rated walls and floors and other fire-rated separations as follows:-

a. Excess space in framed openings through structural floors between conduits and concrete shall be grouted in with concrete to a depth of at least the thickness of the slab plus 2" minimum above the slab

b. Conduit penetration through poured concrete or masonry walls shall be grouted in with concrete and provided with tight fitting escutcheon plates on both sides.

c. Conduit penetrations through fire-rated dry walls shall be with sleeves through the wall fitted with escutcheon plates on both sides with excess openings filled with fire stop material specifically manufactured for the purpose.

d. Excess space within conduit sleeves or stubs through floor slabs or walls where low voltage/telecommunications cables pass through shall be filled with firestopping material specifically manufactured for the purpose.

e. Where cable trays pass through fire rated partitions or floors utilize fittings specifically manufactured for this purpose that includes multi-cable framed opening sleeves through the wall or floor and insert modules of firestop material through which the cable passes-all installed in accordance with manufacturer's recommendations. Include all additional components necessary for a complete firestop installation. The total cross sectional area of the firestop frame shall be equal to four (4) times the cross sectional area of the cable tray.

f. Utilize fire-rated fittings, as specified elsewhere for penetrations through floor slabs for supplying floor outlets.

3.2.2 All conduits/sleeves used for vertical cable passage shall be sealed utilizing suitable material after the installation of cables as follows:

a. The material shall be non-corrosive to the cable jacket or insulation that it applies to.

b. The material shall provide for a minimum of three (3) hour fire rating.

c. The material shall be non-shrinking, waterproof and smoke tight.

d. The material shall remain flexible and non-hardening.

e. The material shall be of the type that when installed will not slip through the openings, will stick to the surfaces of the openings and the cable and will not require any pressure to be applied to the cable in order to keep it in place.

f. The material shall be installed in a neat and workmanlike manner and the final installation shall be smooth finished to the top of the sleeve or conduit.

g. The material shall be easily removable without damaging the cables after being set or cured for at least one week.

3.2.3 All horizontal cable penetrations through rated walls shall be sealed in a manner that will provide a fire rating greater than or equal to the wall construction.

3.2.4 Upon completion of the telecommunications work, the contractor will certify that all openings for the cables satisfactorily sealed and fire stopped.

3.2.5 All materials used for firestopping shall be approved for the purpose and the rating of the wall or floor and all methods employed shall meet with the approval of the local authorities.

3.2.6 The cabling contractor shall review the architectural drawings and specifications for all locations of fire rated walls and floors.

3.3 MOUNTING HEIGHTS

3.3.1 Heights of all wall mounted outlets shall be in accordance with the following list. (Dimensions are above finished floor unless noted.)

a. Telecommunications outlet in field constructed wall, partition or column unless otherwise specified below -- 18" to centerline.

b. Telecommunications outlet in factory fabricated wall or partition, unless otherwise specified below -- Dimension determined by wall or partition construction.

c. Telecommunications outlet in telecommunications closets, mechanical spaces, electric switchboard rooms electric closets -- 5'-0" to center-line.

d. Termination blocks wall mounted in MDF locations -- 6'-10" to the top of the highest termination block.

e. Termination blocks wall mounted in IDF -- 6'-0" to the top of the highest termination block.

f. Wall mounted cabinets and frames -- 6'-0" to the top of the highest mounting position. The clearance between adjacent cabinets/frames shall be sufficient to allow access to the inside of the cabinet/frame particularly if it is provided with a hinged opening.

g. Wall mounted distribution rings -- directly above the highest mounted termination device.

h. Wall mounted fiber optic patch panels -- 6'-0" to the top of the highest patch panel.

i. Wall mounted active electronic and passive electronic devices -- 6'-0" to the top of the highest device unless specified otherwise, multiplexing devices which do not require regular monitoring or maintenance (i.e., security panels, paging amplifiers, CATV, etc.)

shall be mounted above 8'-0".

3.3.2 Heights of all wall mounted outlets shall be in accordance with the architectural drawings and details. Equipment mounting heights shall be in accordance with telecommunications details. Any discrepancies shall be brought to the engineer's attention.

3.3.3 Architectural drawings and field instructions issued by the Architect take precedence over the above list and shall be adhered to.

3.4 SUPPORTS

3.4.1 Support work in accordance with best industry prac-tice and the following.

3.4.2 Include supporting frames or racks extending from floor slab to ceiling slab for work indicated as being sup-ported from walls and partitions where they are incapable of supporting the weight. In particular, provide such frames or racks in IDF closets and Equipment Rooms.

3.4.3 Include supporting frames or racks for equipment, intended for vertical surface mounting, which is required in a free standing position.

3.4.4 Supporting frames or racks shall be of standard angle, standard channel or specialty support system steel members. They shall be rigidly bolted or welded together and adequately braced to form a substantial structure. Racks shall be of ample size to assure a workmanlike arrangement of all equipment mounted on them.

3.4.5 Nothing (including outlet, pull and junction boxes and fittings) shall depend on conduits, raceways or cables for support.

3.4.6 Nothing shall rest on, or depend for support on, suspended ceiling media (tiles, lath, plaster, as well as splines, runners, bars and the like in the plane of the ceiling). Vertical members which suspend the ceiling (together with their horizontal bracing which occurs above the ceiling), however, may be used for support.

3.4.7 Where support members must of necessity penetrate air ducts, include, in accordance with instructions issued in the field, airtight sealing provisions which allow for a relative movement between the support members and the duct walls.

3.4.8 Include in the telecommunications work channel sills or skids for leveling and support of all floor mounted telecom-munications equipment.

3.4.9 Where permitted loading is exceeded by direct appli-cation of telecommunications equipment to a slab or deck, include in the telecommunications work proper dunnage as required to distribute the weight in a safe manner.

3.4.10 Riser cabling shall be supported via wall mounted Kindorf framing or vertical ladder rack. The framing shall be extended the entire length of the riser shaft (whether or not used entirely by the communications

contractor). Vertical members for cable support shall be extended and secured from slab to slab at distances no more than 4' on center. No less than three (3) horizontal cross members shall be fastened to the vertical members using approved system accessories. All framing components shall be 1-1/2" by 1-1/2" minimum perforated 'C' channel.

3.4.11 Fire-resistant nylon cable ties shall be used for securing riser cables to the Kindorf framing. The cable ties shall be placed around the horizontal cross members and secured to the cable to be supported.

3.4.12 All cable ties used to support permanently installed telecommunications cabling in cabinets and frames shall be fire-resistant nylon cable ties unless specified otherwise. All cable ties for patch cords shall be of the color coded Velcro type unless specified otherwise. The support rating of the nylon and velcro cable ties used shall be a minimum of twice that of the weight per unit of the cable(s) to be supported.

3.4.13 Cable tray, rack/runway and/or conduit systems have been provided by the electrical trade for routing and support of the telecommunications cabling, outside of the IDF closets. Ladder rack within the IDF closets shall be provided by the cabling contractor.

3.4.14 All cable routed off of cable trays above the ceiling shall be supported using J-hooks to be provided by the cabling contractor as required. Supports shall be independently secured off of the slab or structural steel, and shall be spaced no farther than 5'-0" on center, or closer if required to conform to cable manufacturer's or J-hook manufacturer's recommendations.

3.5 FASTENINGS

3.5.1 Fasten telecommunications work to the building structure in accor-dance with the best industry practice and the following.

3.1.2 As a minimum procedure, where weight applied to the attachment points is 100 pounds or less, fasten to building elements of:-

a. Wood -- with wood screws.

b. Concrete except precast and solid masonry -- with bolts and expansion shields.

c. Hollow construction -- with toggle bolts.

d. Solid metal -- with machine screws in tapped holes or with welded studs.

e. Precast concrete and steel decking or subfloor --with fastenings as specified below for applied weights in excess of 100 pounds.

3.5.3 As a minimum procedure, where weight applied to building attachment points exceeds 100 pounds, but is 300 pounds or less, conform to the following:-

a. At field poured concrete slabs, utilize inserts with 18" minimum length slip-through steel rods, set transverse to reinforcing steel.

b. At precast concrete slabs utilize the factory embedded inserts included separate from the telecommunications work.

c. At precast or existing concrete slabs utilize 24" x 24" x 1/2" steel fishplates on top with through bolts. Fishplate assemblies shall be chased in and grouted flush with the top of slab screed line, where no fill is to be applied.

d. At steel decking or subfloor for all fastenings, utilize through bolts or threaded rods. Exclude penetrations of cells. The tops of bolts or rods shall be set at least one inch below the top fill screed line and grouted in. Suitable washers shall be used under bolt heads or nuts. In cases where the decking or subfloor manufacturer produces specialty hangers to work with his decking or subfloor such hangers shall be utilized.

3.5.4 Where weight applied to building attachment points exceeds 300 pounds, conform to the following:-

a. Where building is steel framed, utilize suitable auxiliary channel or angle iron bridging between building structural steel elements to establish fastening points. Bridging members shall be suitable welded or clamped to build-ing steel. Utilize threaded rods or bolts to attach to bridging members

b. Where building is concrete framed, abide by the specific instructions issued in the field by the Contracting Officer.

3.5.5 Floor mounted equipment shall not be held in place solely by its own dead weight. Include floor anchor fastenings in all cases. This includes all telecommunications racks, cabinets and free standing frames.

3.5.6 For items which are shown as being ceiling mounted at locations where fastenings to the building construction element above is not possible, provide suitable auxiliary channel or angle iron bridging tying to building structural elements.

3.5.7 No more than three (3) riser cables in excess of 0.5" each in diameter shall be fastened using one cable tie.

3.5.8 Cable ties fastening multiple small cables shall form a grouping no larger than three (3) inches in diameter.

3.5.9 All cables shall be grouped and bundled utilizing approved fire-rated nylon cable ties, the best industry practice and the following:

a. Where multiple cables serve a single workstation, the cables shall be tied as a single bundle every four (4) feet, minimum.

b. Horizontal cabling routed in cable tray shall be tied every ten (10) feet, minimum.

c. Cable ties shall be deployed every two (2) feet minimum when fastening telecommunications cables run vertically on a wall or rack.

d. Cable ties shall be deployed every three (3) feet minimum when fastening riser cables to Kindorf framing.

e. Cabling run in surface mounted raceway shall be tied and secured to the raceway via nylon cable tie mounts and cable ties. Screws used for securing the raceway to wall or furniture surfaces shall be applied through the tie mounts (Panduit TM or MTP mounts or equal) applied every two (2) feet, minimum. No adhesive mounts will be considered acceptable.

f. Cables routed in furniture systems shall be tied at first pedestal location where the cable enters the furniture system, minimum.

g. Cables shall be tied on racks, frame, cabinets, etc., every two (2) feet, minimum.

h. Cable ties shall be tightened sufficiently, without damage or crushing to cable or sheath while ensuring that the specified electrical properties of the cable are not affected.

3.6 LOCATING AND ROUTING CIRCUITRY

3.6.1 All circuitry shall be run concealed except that it shall be run exposed:-

a. Horizontally at the ceiling and vertically on the walls of telecommunications and telephone closets and of permanently unfinished spaces which are not assigned to mechanical or electrical equipment.

3.6.2 Concealed circuitry shall be so located that building construction materials can be applied over its thickest ele-ments without being subject to spalling or cracking.

3.6.3 Circuitry run exposed shall be routed parallel to building walls and column lines.

3.6.4 Exposed circuitry located overhead shall be run in a completely accessible manner on the underside of all piping and ductwork.

3.6.5 Circuitry run in suspended ceilings shall be routed parallel to building walls, column lines, etc.

3.6.6 Circuitry shall be routed so as to prevent telecommunications conductors from being subject to high ambient temperature. Minimum clearances from heated lines or surfaces shall be maintained as follows:-

a. Crossing where uninsulated----------6"

b. Crossing where insulated----------3"

c. Running parallel where uninsulated------3'-0"

d. Running parallel where insulated--------6"

3.6.7 Circuitry shall not be routed over or under a boiler except where special provisions for wiring through these specific high ambient temperature areas have been indicated.

3.6.8 Circuitry shall not be run in elevator or dumbwaiter shafts, hoistways, and the like.

3.6.9 Circuitry for miscellaneous systems indicated without notation as to location and routing shall be run as per the requirements and notations governing the adjacent telecommunications circuitry.

3.6.10 Under no circumstances shall voice/data wiring pass through electric closets, switchgear rooms, gas meter rooms, mechanical spaces, janitors closets, etc.

3.6.11 The distance limitations for the following cable types/systems shall be as follows:

Cable Type/System	Max. Distance
24 AWG unshielded Twisted Pair (4 pr) For workstations*	295' (90m)
Multi-mode fiber optic cable Single-mode fiber optic cable	
RS-232 Cabling	50'

3.6.12 Provide a minimum of 6" clearance between telecommunications cables and fluorescent, neon, incandescent or high intensity discharge fixtures such as mercury vapor lamps.

3.6.13 Provide a minimum of 36" clearance between telecommunications cables and all motors, transformers or other devices with a potentially high electromagnetic interference.

3.6.14 The contractor shall utilize existing empty conduit, provided by others, for the routing of the telecommunications wiring.

3.6.15 The contractor shall utilize cable tray within the ceiling provided by others for routing of telecommunications wiring.

3.7 INSTALLING CIRCUITRY

3.7.1 In runs of conduit or raceway including flexible, limit the number

of bends between cable access points to a total which does not exceed the maximum specified for the particular system. Where no such maximum is specified, limit the number to two right angle bends or the equivalent thereof.

3.7.2 In each conduit, raceway or floor cell assigned for telecommunications work or future pulling in of wires, include a minimum of three (3) nylon drag cords. In raceways 2" trade size and larger, the cord shall be pulled in utilizing a suitable brush, followed by an 85% diameter ball mandrel ahead of the cord in the pulling assembly if not already performed by others

3.7.3 Sleeves used where circuitry is to penetrate water proof slabs, decks and walls, shall be of a type selected to suit the water condition encountered in the field.

3.7.4 Sleeves for passage of circuitry through slabs incorporating metal decking shall be set prior to the pouring of concrete. They shall be maintained and filled during the pouring of concrete, the metal decking being cut through after concrete is hardened. Exclude all penetrations of cells.

3.7.5 Each conduit, sleeve or raceway assigned for telecommunications work shall be provided with a bushed opening. If not provided by the Electrical Contractor, bushings shall be provided by the Cabling Contractor prior to installing his cable.

3.7 .6 All conduits entering telecommunications closets and/or equipment rooms shall be provided with bushed openings.

3.7.7 It is the contractor's responsibility to ensure that the telecommunications cabling is protected from all sharp edges, burrs, etc., in all raceway systems intended for telecommunications cabling. All protection shall be in place prior to installing cabling.

3.7.8 An attempt shall be made to locate the wall space for terminations on one continuous wall. If wall space for terminations is not available on one continuous wall, the situation shall be brought to the Engineer?s attention.

3.7.9 At each work station, the contractor will cable and install cable connectors for connection to final equipment. The contractor will cable, connectorize and/or punch down cables on connector blocks furnished and installed in the telecommunications closets serving the various station areas. Riser prebundled or bulk cables will be labeled, connectorized, punched down and cross-connected through a separate set of termination blocks and then routed through inter-floor slots or sleeves. Other outlet locations will be cabled as specified and indicated elsewhere.

3.7.10 The contractor is responsible for all pulls through conduit, sleeves, raised floors, etc. of all bundled or individual cables including all labeling and connectorizing at all junctions and terminations. All required connecting blocks will be furnished and installed by the contractor. Other outlet locations will be cabled and specified as

indicated on the drawings.

3.7.11 Each type of cabling media (i.e. fiber, twisted pair, etc.) shall be bundled separately for all horizontal runs unless otherwise specified.

3.7.12 The contractor shall be responsible for maintaining the manufacturer's recommended minimum bend radius on all cables throughout the installation.

3.7.13 All cables terminated on blocks, patch panels, equipment assemblies, etc., shall be installed in increasing consecutive alphabetical or numerical order, starting from the upper left hand corner of the terminating device, unless other wise noted.

3.7.14 All cables shall be provided with strain relief such that pulling on the cable jacket will not affect the terminated conductors. In raised floor boxes and surface mounted boxes under the raised floor, strain relief inserts shall be provided where the cable enters the outlet box.

3.8 PULLING WIRES INTO CONDUITS AND RACEWAYS

3.8.1 Utilize nylon snakes or metallic fish tapes with ball type heads to set up for pulling.

3.8.2 In raceways 2" trade size and larger, utilize a pulling assembly ahead of wires consisting of a suitable brush followed by an 85% diameter ball mandrel. Submit certifications that mandrel-ling has been performed as specified.

3.8.3 Prior to installation, submit evidence that wires are new (in accordance with the definition of "New" as hereinbefore specified).

3.8.4 Leave sufficient slack on all runs of wire and cable to permit the secure connection of devices and equipment.

3.8.5 Include circular wedge-type cable supports for wires and cables at the top of any vertical raceway longer than 20 feet. Also include additional supports spaced at intervals which are no greater than those set forth as industry minimum standard. Supports shall be located in accessible pull boxes. Supports shall be of a non-deteriorating insulating material manufactured specifically for the purpose.

3.8.6 Pulling lubricants shall be products manufactured specifically for the purpose.

3.8.7 Slack on wires and cables located in cabinets and pull boxes shall be formed and set in place in groupings corresponding to their occupancy of raceways. They shall also be arranged, with insulators and supports provided where necessary, such that cable shims or other such temporary expedients do not have to be left permanently in place to prevent the wires and cables from shifting when covers or trims are removed.

3.9 INSTALLING WIRING DEVICES

3.9.1 Install wiring devices in accordance with the follow-ing:-

a. Telecommunications outlets shall be mounted horizontally or vertically as directed by the architect.

b. Provide plates for all wall mounted telecommunications devices.

c. Utilize stanchions flush floor outlet fittings as standard mounting for all floor mounted outlets.

d. Obtain final field instructions from the Architect prior to locating devices whose plates flush floor outlet fittings stanchions or visible parts have been specified in materials, colors or finishes which differ.

e. Extension brackets shall be provided where necessary to ensure sufficient cable spacing is maintained in raceways.

3.10 INSTALLATION OF CIRCUITRY FOR MISCELLANEOUS LOW VOLTAGE SYSTEMS

3.10.1 Comply with requirements described in applicable subsections of Section 16415, ELECTRICAL WORK, INTERIOR. In particular, note the following circuitry requirements for low voltage systems:

a. Wiring for miscellaneous low voltage systems may be run without conduit - subject to the approval of the local authorities - except where prohibited by other sections of these specifications or by indications on the drawings.

b. Wires and cables shall have characteristics - in compliance with Articles 725 and/or 800 (as applicable) of the National Electrical Code - as described elsewhere in the specifications or drawings for this project, and shall be U.L. listed in accordance therewith.

c. Where wires and cables are permitted to be run without conduit, they shall be independently supported from the building structure or ceiling suspension systems at intervals not exceeding four feet on center, utilizing cable supports specifically approved for the purpose. Wires and cables shall not rest on or depend on support from suspended ceiling media (tiles, lath, plaster, as well as splines, runners or bars in the plane of the ceiling), nor shall they be supported from pipes, ducts or conduits. Where cables are bundled together, separate bundles shall be provided separately for each type of cabling and separately for each independent system. Bundling and/or supporting ties shall be of a type suitable for use in a ceiling air handling plenum regardless of whether or not installed in a plenum.

d. Cables shall be tagged or labeled at each termination point and in each intermediate junction box, pull box or cabinet through which they pass.

e. Comply with applicable requirements for locating and routing circuitry, for installing circuitry, and for fire-stopping as

described in other Section 07840, FIRESTOPPING.

f. Miscellaneous low voltage cabling which is not part of the voice, data, LAN cabling as described in this specification but is run in the same raceway (i.e., cabletray) shall be clearly identified and separately bundled. All work associated with this cable shall be coordinated with and overseen by the cabling contractor.

3.11 GROUNDING AND BONDING

3.11.1 Ground all systems and equipment in accordance with best industry practice and the following.

3.11.2 Verify with the local exchange carrier his approved method of bonding service entrance cabling.

3.11.3 All ground connectors in the main telecommunications equipment rooms and IDF closets shall be made to the ground bars provided for that purpose as part of the electrical work.

3.11.4 The shield continuity of shielded riser cable shall be maintained over the entire cable length.

3.11.5 All shielded riser cables shall be bonded to an approved grounding terminal at the base (MDF side) and/or the IDF closet when interconnecting equipment rooms of the riser unless specified otherwise.

3.11.6 All shielded horizontal station cabling shall be tied to ground at the closet end of the cabling only.

3.11.7 All metal panels, enclosures, boxes, racks, raceways, etc. in equipment rooms and IDF closets shall be grounded.

3.11.8 Exclude aluminum conductors from any grounding electrode connection which goes into the ground or becomes concrete embedded at the point of attachment to the electrode.

3.11.9 Conductors utilized for grounding and bonding shall not be less than #6 AWG and shall have type "TW" or better insulation, color coded green.

3.11.10 Grounding and bondingh shall be provided in accordance with EIA ANSI/TIA/EIA-607.

3.12 TESTING

3.12.1 Before an application for final acceptance of the telecommunications work will be considered, all tests deemed necessary by the Owner and Engineer to show proper execution of the telecommunications work shall have been performed and completed in the presence of the Owner's representative. Scheduling of all testing procedures shall be arranged to suit the convenience of the Owner.

3.12.2 Tests specified to be performed in this document are intended to

verify the quality of all cabling. This document also establishes a uniform method of reporting the test results for evaluation by the Engineer and Owner.

3.12.3 All tests are to be performed upon completion of the initial installation.

3.12.4 Performing the indicated tests does not constitute equipment or circuit acceptance.

3.13 TEST EQUIPMENT

3.13.1 The contractor shall utilize the most advanced test equipment available for each test to be performed. Prior to performing any testing, the contractor shall submit the proposed test equipment and accessories to the engineer for approval along with performance data. Note: No test will be considered acceptable if the test equipment has not been approved by the Engineer first. Test equipment shall be submitted to the Engineer for the testing of the following cabling.

a. Twisted pair (multipair) riser cable

b. pair Category 3,4,5, 5e cable

c. Fiber optic cables (include OTDR and dB meter testing)

3.13.2 The contractor shall furnish (2) hand-held testers for the Owner. The testers shall be capable of testing cabling for compliance with Category 3, 5, 5e and 6 specifications.

3.14 TESTS TO BE PERFORMED

3.14.1 Tests are to be performed on the following aspects of the telecommunications cabling system:

a. From each main equipment room (MDF) termination block to each corresponding Equipment room and telecommunications closet (IDF) termination.

b. From each telecommunications closet (IDF) or Equipment room to each corresponding telecommunications closet (IDF) or Equipment room tie cable termination.

c. From each telecommunications closet (IDF) and Equipment room termination to each and every workstation termination.

d. Any other telecommunications riser or station cable which forms a portion of this installation.

3.14.2 All cable runs for which equipment will not initially be attached must be tested to the same level of compliance as all other cabling.

3.14.3 Prior to any acceptance testing being performed, a sample test shall be performed for each series of tests (i.e., copper, fiber, etc.).

The sample test shall consist of a regular acceptance test on a few sample cables as selected by the contractor. The Engineer shall be given a minimum of ten (10) days notice so he and/or his representative may observe the test.

3.14.4 Voice grade cable

a. Tests to be performed; The following items must be demonstrated:

1. Conductors are electrically continuous between terminations.

2 Conductors are electrically isolated from all other conductors.

3 Conductors contain no shorts to ground.

4 Cables have a properly grounded shield (where applicable) as specified and in accordance with the best industry practice.

5 Polarity.

3.14.5 Data grade cable

a. The tests on this cable shall be the same as for Voice Grade cable as stated above. In addition, the following test shall be performed on all pairs of a twisted pair cable or pair #1 of a cable greater than 4 pairs. All cables shall be tested in accordance with Accuracy level II Standards as defined in EIA ANSI/TIA/EIA TSB-67. This shall be superseded with Level III testers if available prior to the completion of the cabling installation.

b. Tests to be performed

1. The test equipment shall be configured to test the maximum transmission performance for which the cable is rated (i.e., Cat 3 = 10 Mbps, Cat 5 = 100 Mbps.

2. The following minimum information shall be provided for each cable and pair to be tested:

a) Length - find the total cable length.

b) Resistance - measured for each cable pair.

c) Noise - measured for each pair at the following frequencies: 10Hz - 150KHz, 150KHz - 16MHz, 16MHz - 100MHz

d) Attenuation (dB loss) - measured for each pair at 10MHz.

e) Near End Cross Talk (NEXT) - measure NEXT in dB and the associated frequency.

f) Delay - measured for each cable pair.

g) Delay Skew - find the delay skew between the fastest and slowest pairs.

h) Attenuation to Crosstalk Ratio (ACR).

i) Power Sum Near End Crosstalk (PSNEXT).

j) Wire map - indicate that the wiring at the near end and far end are as specified.

k) Structural Return Loss (SRL).

3. For all cables required to meet the Category 5e requirements detailed elsewhere in this specification, the following additional information shall be provided for each cable and pair:

a) Equal Level Far End Crosstalk (ELFEXT)

b) Power Sum Equal Level Far End Crosstalk (PSELFEXT)

c) Power Sum Attenuation to Crosstalk Ratio (PSACR)

d) Structural Return Loss (SRL)

4. During testing (link test), if any failures or marginal pass results occur (a marginal pass is indicated as (*pass) on the test equipment), the following procedures are to be taken:

a) For marginal pass (*pass) results, the circuit will be retested. It the re-test result is a failure, troubleshoot and correct the problem. If the result is again a marginal pass for any reason other that excess length, troubleshoot and correct the problem as if the result were a failure. If the marginal pass is due to excess length, make every effort to remove slack in the run and re-test.

b) For failure results, re-test and/or troubleshoot to correct the problem. Provide documentation to support the good circuit by providing the test results of that circuit that indicate 'pass' (a non-marginal pass).

c) Provide an explanation for each failure or marginal pass result that has not been resolved, including a description of the steps take to troubleshoot the circuit and the reason why further corrective action has been undertaken.

3.14.6 Fiber optic cable greater than 300 feet in length.

a. Test equipment

Optical time domain reflectometer (OTDR) with chart recorder.

b. Tests to be performed

1. A prequalitied one hundred (100) foot minimum fiber optic cable containing the same performance parameters of the cable to be tested, shall be connected at each end of the test setup.

2. The OTDR shall be used on each fiber optic strand to identify:

a) Length of cable.

b) Discontinuities with the cable/connectors.

c) Areas of localized attenuation.

d) Total loss (dB) from end to end including terminations.

The above measurements shall be taken at both 850nm and 1300nm using a short pulse width.

3. Cursor and marker distances shall be standardized for fiber optic cables with the same origin and destination for all tests (i.e., main equipment room to telecommunications (IDF) closet). Tests which are performed and not standardized shall be retested at the Engineers request.

4. No area of localized attenuation shall be greater than 0.2 dB.

5. The OTDR trace should be expanded to fill at least two-thirds to three quarters of the OTDR screen. The input pulse and the end "spike" of the cable shall both be displayed.

6. The input pulse and the end "spike" shall be elevated off the bottom of the screen by approximately one division.

7. Each OTDR trace shall be annotated with information regarding fiber identification and the settings selected on the OTDR.

8. The OTDR traces shall be maintained as a permanent record for the purposes of maintenance and restoration.

3.14.7 Fiber optic cable less than 300 feet in length

a. Test equipment

FOTEC Power Meter FM310
FOTEC Smart Source FM370 (850 and 1300 nm)

b. Test to be performed

1. A prequalitied twenty-five (25) foot minimum fiber optic cable containing the same performance parameters of the cable to be tested, shall be connected at each end of the test startup.

2. The dB meter shall be used on each fiber optic strand to identify:

a) Total cable loss (dB) from end to end including terminations.

The above measurements shall be taken at both 850nm and 1300nm using a short pulse width.

c. The test setup shall be standardized for fiber optic cables with the same origin and destination for all tests (i.e., main equipment room to telecommunications (IDF closet). Tests which are performed and not standardized shall be retested at the Engineers request.

d. The two 25 foot prequalified test cables shall be connected together temporarily using an approved coupler. The light source shall be introduced at one end and the meter at the other. The meter shall be adjusted to give a reading of 0.0 for the two prequalified cables and the coupler. This shall be used as the reference for all testing at the stipulated wavelength. This setup procedure shall be repeated for each wavelength tested (i.e., 850 and 1300 nm).

e. At the completion of the calibration, remove one of the prequalified test cables and the light source and connect it to one end of the cable to be tested. Place the other prequalified test cable and meter at the other end of the cable to be tested. Measure and record the loss within the cable and connectors. Record the results and repeat for the next cable to be tested.

f. The above tests shall be performed for both 850 and 1300 nm.

g. The test data shall be recorded in a Microsoft Access, Excel or dBase compatible format and shall be maintained as a permanent record for the purposes of maintenance and restoration. a copy of the test results shall be provided to the engineer as indicated elsewhere.

3.15 RECORD OF TEST RESULTS

3.15.1 a record of all required tests shall be provided to the Engineer and Owner. The information shall be maintained as permanent record for the purposes of maintenance and restoration.

3.15.2 a brief description outlining the test equipment used and a single line diagram indicating the test setup shall be provided to the Engineer for his review. The level of description should be sufficient enough to allow an individual who is not familiar with the specific test equipment to recreate any portion of the test.

3.15.3 Test results to be provided shall contain the following minimum information:

a. For all similar cable runs include:

Project name

Description of test (i.e., voice riser, workstation cable, etc.)

Cable origin

Cable destination

Cable ID

Cable pair/strand

Test date

Tester (individual responsible for conduct of the test)

Page of .

b. For copper cables:

1. No shorts, no crosses, no breaks

2. For the indicated pairs of the cables include:

- Length
- Resistance
- Noise @ 10 Hz - 150 KHz
  150KHz- 15MHz
  16MHz - 100MHz
- Attenuation (dB) at 10MHz
- Near end cross talk (NEXT) and the associated frequency
- Delay
- Delay Skew
- Structural Return Loss (SRL)
- Attenuation to Cross talk Ratio (ACR)
- Power Sum NEXT
- Wire map
- Equal Level for End Crosstalk (ELFEXT), if applicable.
- Power Sum Equal Level for End Crosstalk (PSELFEXT), if applicable.
- Power Sum Attenuation to Crosstalk Ratio (PSACR), if applicable.

- Test equipment settings.

c. For fiber optic cables

1. OTDR trace

2. Length

3. Wavelength

4. Refractive index

5. point attenuation (dB)

6. Test equipment settings.

3.15.4 While it is recognized that the test results will be completed in the field, it is important to note that they will serve as record documents. Therefore, care should be taken in the recording of the test results. The final product is expected to be done in a neat and legible manner.

3.15.5 All test results shall be provided in the following formats:

a. Printed (3 bound copies)

b. Disk (DOS formatted - 3-1/2" 1.44 MB floppy, Zip Disk or CD rom as specified by the Engineer).

The test equipment shall have the ability to record test results to a printer or memory for printing later. Submitting of these printed test forms is preferred in lieu of handwritten forms.

The test equipment shall also have the ability to store the test results to a floppy disk. Where floppy disk drives are not available, data can be downloaded to a PC.

The test results are required on disk to associate the information with a cable management database. The test results shall be provided in a Dbase compatible format.

3.15.6 a copy of the test results in both electronic and printed formats shall be provided to the Engineer for his review and the Owner for his records.

3.16 CORRECTIVE ACTION

3.16.1 Any defects or deficiencies discovered in any of the telecommunications work shall be indicated on the test report and be corrected.

3.16.2 Upon completion of testing and problem resolution, all connections tested are to be 100% error free.

3.16.3 Any connections determined to be not correctable shall be indicated at each end of the termination as "bad" (in red).

3.17 EQUIPMENT INSTALLATION AND TESTING

3.17.1 The contractor shall be available during equipment installation and testing to help isolate faults which may exist in the cabling system installation.

3.17.2 The contractor shall coordinate with other vendors where necessary to resolve any discrepancies between the cabling system and the vendors cabling or equipment.

-- End of Section --

SECTION 16800

CENTRAL PAGING SYSTEM, SOUND SYSTEMS AND AUDIO-VISUAL SYSTEMS

PART 1 GENERAL

1.1 SUBMITTALS

Government approval is required for submittals with a "GA" designation; submittals having an "FIO" designation are for information only. The following shall be submitted in accordance with Section 01330 SUBMITTAL PROCEDURES:

SD-01 Data

Materials and Equipment List; GA

Before ordering equipment or beginning work, submit to the Contracting Officer for approval a list showing quantities and manufacturer and model number for items of equipment to be used in assembling this system, including all items of equipment specified herein. Attach copies of catalog sheets for all items of equipment submitted.

SD-04 Drawings

Block Diagram; GA; Loudspeaker Mounting Drawings; GA; Simplified Line Drawings; GA; Equipment Rack Elevation Drawings; GA; Receptacle Plan; GA.

Submit the following drawings and diagrams for approval, prior to fabrication and installation:

1. A block diagram indicating proposed interconnections of all equipment and indicating equipment types and model numbers.

2. Drawings of loudspeaker mounting arrangements, equipment rack elevations and layouts, and receptacle and control plates and boxes.

3. Simplified line drawings showing the essential parts of the completed installation and their functional relations, including all jacks, numbered according to their position on the system patch panels (A, B, etc., for horizontal rows, 1-26 for vertical columns). After drawings have been approved, mount one copy of the diagram behind clear plastic on the wall near the equipment rack, or as directed. Bind one copy of the diagram into each instruction manual. Reduce the mounted copy to 11" x 17" maximum; insure that it is legible at that size.

4. Receptacle Plan: Provide a plan showing the location and designation of all receptacles and loudspeakers. After the

receptacle plan is approved, mount one copy and bind other copies into manuals as specified for the line diagram.

SD-06 Instructions

Operating Manuals and Instruction Manuals; GA.

Provide draft copies of all required instruction manuals on-site for inspection during the demonstration and acceptance testing of the system; submit final copies thereafter. Provide the following:

1. Operating Manuals: Include instructions for operating the system in all modes of operation, and to fulfill all functional requirements, and all drawings specified above.

   Provide five (5) bound copies.

2. Complete Instruction Manuals: In addition to operating manuals, provide complete instruction manuals which include the following:

   a. Table of contents.
   b. List of loose items furnished (microphones, stands, cables, etc.).
   c. List of functional requirements.
   d. Operating manual (described above).
   e. List of settings and adjustments for semi-fixed controls.
   f. Manufacturer's sheets of specifications, operating instructions, and service information arranged alphabetically by manufacturer and then by model number, for each item of equipment specified herein.
   g. Detailed system wiring diagrams, including cable schedules, and copies of all drawings specified above.
   h. Provide five (5) bound copies.

Software Manuals; FIO.

Software and Manuals: Provide to Contracting Officer and retain a copy of all operating software, if any, and manuals, including custom software.

SD-08 Statements

Qualifications; FIO.

Evidence that the bidder has been in business for at least five years prior to bid date and that their primary business is the installation of commercial audio systems.

References; FIO

Submit references, including names and telephone numbers of individuals who may be contacted, showing satisfactory completion of three or more projects similar in scope and type to that specified herein.

Affirmation of Intent; GA

Submit evidence of ability and affirmation of intent to meet the guarantee and service requirements stated herein.

Field Supervisor; FIO

Submit the name of the employee who will be on-site field supervisor through the completion of this project.

SD-09 Reports

Test Reports; GA

Upon completion of all tests and adjustments, submit two copies of a written report presenting test results, including numerical values, for review by the Contracting Ffficer prior to demonstration and acceptance testing. With this report, submit written certification that the installation conforms to the requirements stated herein, is complete in all respects, and is ready for inspection and testing by the Contracting Officer.

1.2 SCOPE OF WORK

Furnish and install a sound amplification system as shown on drawings and as specified herein, complete with all apparatus, equipment, wiring, labor and services necessary to ensure a working system. Verify completeness of equipment listed and correctness of type numbers. Furnish and install supplementary equipment needed to meet system requirements, without claim for added payment.

The work includes, but is not limited to, the following:

1. Submission of shop drawings prior to fabrication.
2. Verification of dimensions and conditions at the job site.
3. Installation in accordance with these specifications, manufacturer's recommendations, and all applicable code requirements.
4. Setup and adjustment of signal processing, system tests and adjustments, written report, demonstration for approval, participation in acceptance tests, and final adjustments as required.
5. System documentation.
6. Instruction of operating personnel through the contracting officer.
7. Maintenance services for one year.
8. Guarantee.

1.3 FUNCTIONAL REQUIREMENTS

The sound amplification systems shall provide the following systems and functions:

1.3.1 Central Paging System

1. With paging controls and microphones at the Center Lobby, B102,

guard desk and at Administration Z320.

2. With a digital signal processor/paging controller to allow for zone selection of independent sound systems, preset paging zones, and common spaces
3. With preset paging zones that can be re-configured and re-programmed for future zoning requirements
4. With additional unused outputs for future paging zones (e.g. Crandall Pool, Hayes Gym)
5. With a non-priority all-call preset.
6. With a priority emergency override feature which overrides all independent sound systems, loudspeaker attenuators, simultaneous pages and messages through the central paging system
7. Using loudspeakers throughout corridors, and occupied enclosed rooms without independent sound systems
8. Using the audio-visual systems and independent sound systems throughout the buildings
9. With typical zones as follows:

    a. Basement Floor building section YN
    b. 1st Floor building section YN
    c. 2nd Floor building section YN
    d. 3rd Floor building section YN
    e. 4th Floor building section YN
    f. Gyms
    g. Pools
    h. Combatives
    i. Admin
    j. Corridors

11. Using equipment located in three (3) floor-standing equipment racks in Tel/Data Room Y203
12. Non-Interruption of dedicated sound and audio-visual systems if a "do not disturb" mode is requested for the independent sound systems, unless in an emergency mode/priority mode.
13. With a DC voltage fire alarm system interface which disables the system when required

1.3.2 Room Y040 Instructional Pool Sound System

1. Using three (3) wired microphones with water-proof foot switches for speech reinforcement
2. Using a push-to-talk announcement microphone in Deck Office Y042 for local announcements
3. Using five (5) weather-resistant surface-mounted loudspeakers along west wall
4. With a compact disc/ audio cassette deck combination deck for pre-recorded audio material playback
5. With an AM/FM tuner for reproduction of commercial and campus-wide radio signals from the FM radio antenna distribution system
6. Using operator-controlled equipment in a floor standing equipment rack in sound closet Y046 as follows:

    a. 8-Channel Mixer
    b. CD Player/Cassette Deck

c. Local Power Switch
d. Do Not Disturb Switch

7. Using a master volume control located in deck office Y042
8. With a central paging system interface and equipment which allows the central paging system to use the loudspeakers to make announcements to listeners within the pool area, except when the do not disturb switch is enabled.
9. With a DC voltage fire alarm system interface which disables the system when required
10. With provisions for future remote wireless microphone antennae and systems

1.3.3 Room Z020 Intramural Pool Sound System

1. Using five (5) wired microphones with water-proof foot switches for speech reinforcement
2. Using a push-to-talk announcement microphone in Deck Office Z026 for local announcements
3. Using five (5) weather-resistant surface-mounted loudspeakers along north wall
4. With a compact disc/ audio cassette deck combination deck for pre-recorded audio material playback
5. With an AM/FM tuner for reproduction of commercial and campus-wide radio signals from the FM radio antenna distribution system
6. Using operator-controlled equipment in a floor standing equipment rack in sound closet Z028 as follows:

   a. 8-Channel Mixer
   b. CD Player/Cassette Deck
   c. Local Power Switch
   d. Do Not Disturb Switch

7. Using a master volume control located in deck office Z026
8. With a central paging system interface and equipment which allows the central paging system to use the loudspeakers to make announcements to listeners within the pool area, except when the do not disturb switch is enabled.
9. With a DC voltage fire alarm system interface which disables the system when required
10. With provisions for future remote wireless microphone antennae and systems

1.3.4 Room A102 Fitness Sound System

1. With a compact disc/ audio cassette deck combination deck for pre-recorded audio material playback
2. With an AM/FM tuner for reproduction of commercial and campus-wide radio signals from the FM radio antenna distribution system
3. Using a wall-mounted equipment rack located in sound closet A112
4. With a push-to-talk announcement microphone at wall-mounted equipment rack for local announcements
5. Using sixteen (16) surface-mounted ceiling loudspeakers
6. With a central paging system interface and equipment which allows

the central paging system to use the loudspeakers to make announcements to listeners within A102 Fitness, except when the do not disturb switch is enabled.

7. With a DC voltage fire alarm system interface which disables the system when required

1.3.5 Room A103 CS Strength Development Sound System

1. With a compact disc/ audio cassette deck combination deck for pre-recorded audio material playback
2. With an AM/FM tuner for reproduction of commercial and campus-wide radio signals from the FM radio antenna distribution system
3. With a VCR for the audio/ video reproduction of VHS-type video cassettes.
4. With one (1) video output receptacle for the distribution of Video to the column-mounted TV receptacle.
5. Using a wall-mounted equipment rack located in sound closet A111
6. With a push-to-talk announcement microphone at wall-mounted equipment rack for local announcements
7. Using sixteen (16) surface-mounted ceiling loudspeakers
8. With a central paging system interface and equipment which allows the central paging system to use the loudspeakers to make announcements to listeners within A103 CS Strength Development, except when the do not disturb switch is enabled
9. With a DC voltage fire alarm system interface which disables the system when required

1.3.6 Sports Medicine Separate sound systems

1. With four (4) independent sound system for pre-recorded audio material playback and reinforcement of central paging system announcements
2. With sound system equipment located in four (4) separate wall-mounted equipment racks as follows:

System Nam	Equipment Rack Room
Sports Medicine Common	Sound Closet Y136
DIA Therapy	DIA Taping Y149
DPE Therapy	DPE Storage Y134
PT Therapy	Trainer Office Y124

3. With four (4) separate compact disc/audio cassette combination decks for pre-recorded audio material playback for each system. Combination decks to be located in each in each sports medicine area equipment rack.
4. With an FM distribution amplifier located in the Sports Medicine common equipment rack which distributes FM radios signals from the FM radio antenna distribution system to the therapy equipment racks.
5. With four (4) separate AM/FM tuners for reproduction of commercial and campus-wide radio signals from the FM radio antenna distribution system. Tuners to be located in each sports medicine area equipment rack.

6. Using recessed ceiling-mounted loudspeakers
7. With a central paging system interface and equipment which allows the central paging system to use the loudspeakers to make announcements to listeners within the sports medicine area, except when the do not disturb switch is enabled. The do not disturb switch to be located in Sport Medicine Common equipment rack.
8. With a DC voltage fire alarm system interface which disables the separate sound systems when required

1.3.7 Room Y221 Wrestling

1. With a compact disc/ audio cassette deck combination deck for pre-recorded audio material playback.
2. Using a wall-mounted equipment rack located in sound closet Y225.
3. With a push-to-talk announcement microphone at wall-mounted equipment rack for local announcements.
4. Using two (2) wall-mounted loudspeakers along the east wall.
5. With a central paging system interface and equipment which allows the central paging system to use the loudspeakers to make announcements to listeners within Y221 Wrestling, except when the do not disturb switch is enabled.
6. With a DC voltage fire alarm system interface which disables the system when required

1.3.8 Room Y223 Wrestling

1. With a compact disc/ audio cassette deck combination deck for pre-recorded audio material playback.
2. Using a wall-mounted equipment rack located in sound closet Y227.
3. With a push-to-talk announcement microphone at wall-mounted equipment rack for local announcements.
4. Using two (2) wall-mounted loudspeakers along the east wall.
5. With a central paging system interface and equipment which allows the central paging system to use the loudspeakers to make announcements to listeners within Y223 Wrestling, except when the do not disturb switch is enabled.
6. With a DC voltage fire alarm system interface which disables the system when required.

1.3.9 Room Y224 Wrestling

1. With a compact disc/ audio cassette deck combination deck for pre-recorded audio material playback.
2. Using a wall-mounted equipment rack located in sound closet Y234.
3. With a push-to-talk announcement microphone at wall-mounted equipment rack for local announcements.
4. Using two (2) wall-mounted loudspeakers along the east wall.
5. With a central paging system interface and equipment which allows the central paging system to use the loudspeakers to make announcements to listeners within Y224 Wrestling, except when the do not disturb switch is enabled.
6. With a DC voltage fire alarm system interface which disables the system when required.

1.3.10 Room Gymnasium Y240

1. Using eight (8) wired microphone receptacles connected to a rack-mounted mixer for sound reinforcement.
2. With a compact disc/ audio cassette deck combination deck for pre-recorded audio material playback.
3. With an AM/FM tuner for reproduction of commercial and campus-wide radio signals from the FM radio antenna distribution system.
4. Using a cable TV converter for reproduction of the audio portion of Army educational television.
5. Using three (3) audio-visual interface receptacles for reproduction of the audio portion of entertainment television from portable televisions.
6. With a push-to-talk announcement microphone in CRD Office Y245 for local announcements.
7. Using a floor standing equipment rack located in sound closet Y247.
8. With room configuration selections at equipment rack using digital signal processing.
9. Using three (3) loudspeaker clusters (one at each court) consisting of three (3) loudspeakers each (Nine (9) loudspeakers total).
10. Using portable operator-controlled mixer cases for use during games with an audience.

    a. Mixing case is used at scorer's table locations.
    b. Plugs into any of four floor boxes (one at each courtside) and plugs into the main equipment rack.
    c. Includes CD Player/Cassette Deck.
    d. Includes Wireless Hand-Held Microphone.

11. With a central paging system interface and equipment which allows the central paging system to use the loudspeakers to make announcements to listeners within Y240 Gymnasium, except when the do not disturb switch is enabled.
12. With a DC voltage fire alarm system interface which disables the system when required.

1.3.11 Room Z220 Varsity Wrestling

1. With a 5-disc carousel type compact disc player for pre-recorded audio material playback connected to a rack-mounted mixer.
2. With a dual-well audio cassette deck for dubbing and independent playback of pre-recorded audio material, connected to a rack-mounted mixe .
3. With an AM/FM tuner for reproduction of commercial and campus-wide radio signals from the FM radio antenna distribution system.
4. With one (1) audio-visual interface receptacle for reproduction of the audio portion of entertainment television from portable televisions to 4-channel mixer.
5. Using a cable TV converter for reproduction of the audio portion of Army educational television.
6. With four (4) microphone receptacles, located at west and east walls.
7. Using a roll-around equipment rack for portable use next to

instructor. Roll-around equipment rack is used as follows:

a. Plugs into west wall and east wall line-level input receptacle.
b. Includes 8-channel mixer.
c. Includes CD Player/Audio Cassette Deck combination deck.
d. Includes wireless headset microphone.

8. Using a wall-mounted equipment rack located in sound closet Z226.
9. With a push-to-talk announcement microphone at wall-mounted equipment rack for local announcements.
10. Using twenty-seven (27) recessed ceiling-mounted loudspeakers.
11. With a central paging system interface and equipment which allows the central paging system to use the loudspeakers to make announcements to listeners within Z220 Varsity Wrestling, except when the do not disturb switch is enabled.
12. With a DC voltage fire alarm system interface which disables the system when required.

1.3.12 Room Z227 Intramural Wrestling

1. With a compact disc/ audio cassette deck combination deck for pre-recorded audio material playback.
2. Using a wall-mounted equipment rack located in sound closet Z229.
3. With a push-to-talk announcement microphone at wall-mounted equipment rack for local announcements.
4. Using two (2) wall-mounted loudspeakers along the east wall.
5. With a central paging system interface and equipment which allows the central paging system to use the loudspeakers to make announcements to listeners within Z227 Intramural Wrestling, except when the do not disturb switch is enabled.
6. With a DC voltage fire alarm system interface which disables the system when required.

1.3.13 Room Y435 Boxing

1. With a compact disc/ audio cassette deck combination deck for pre-recorded audio material playback.
2. Using a wall-mounted equipment rack located in sound closet Y437.
3. With a push-to-talk announcement microphone at wall-mounted equipment rack for local announcements.
4. Using two (2) wall-mounted loudspeakers along the north wall.
5. With a central paging system interface and equipment which allows the central paging system to use the loudspeakers to make announcements to listeners within Y435 Boxing, except when the do not disturb switch is enabled.
6. With a DC voltage fire alarm system interface which disables the system when required.

1.3.14 Room Y436 Boxing

1. With a compact disc/ audio cassette deck combination deck for pre-recorded audio material playback.
2. Using a wall-mounted equipment rack located in sound closet Y438.
3. With a push-to-talk announcement microphone at wall-mounted

equipment rack for local announcements.
4. Using two (2) wall-mounted loudspeakers along the south wall.
5. With a central paging system interface and equipment which allows the central paging system to use the loudspeakers to make announcements to listeners within Y436 Boxing, except when the do not disturb switch is enabled.
6. With a DC voltage fire alarm system interface which disables the system when required.

1.3.15 Room Y320 DPE WEIGHTS

1. With a compact disc/ audio cassette deck combination deck for pre-recorded audio material playback.
2. With an AM/FM tuner for reproduction of commercial and campus-wide radio signals from the FM radio antenna distribution system.
3. Using a wall-mounted equipment rack located in sound closet Y333.
4. With a push-to-talk announcement microphone at wall-mounted equipment rack for local announcements.
5. Using twenty (20) recessed ceiling-mounted loudspeakers.
6. With a central paging system interface and equipment which allows the central paging system to use the loudspeakers to make announcements to listeners within Y320 PE Fitness, except when the do not disturb switch is enabled.
7. With a DC voltage fire alarm system interface which disables the system when required.

1.3.16 Room Y322 Multi-Purpose Room #1

1. With two (2) audio-visual interface receptacles for reproduction of the audio portion of entertainment television from portable televisions to rack-mounted mixer.
2. Using a wall-mounted equipment rack located in sound closet Y327.
3. Using a roll-around equipment rack, for portable use next to instructor. Roll-around equipment rack is used as follows:

   a. Plugs into either of two (2) west wall line-level input receptacles and plugs into main equipment rack.
   b. Includes 8-channel mixer.
   c. Includes a 100 disc CD Player/Jukebox.
   d. Includes a dual-well audio cassette deck for dubbing and independent playback of pre-recorded audio material.
   e. Includes three (3) wireless headset microphones.

4. Using eighteen (18) recessed ceiling-mounted loudspeakers and a ceiling-mounted subwoofer loudspeaker.
5. Using a switching system to separate the divisible room for one separate system using half of the loudspeakers at a time.
6. With a central paging system interface and equipment which allows the central paging system to use the loudspeakers to make announcements to listeners within Y322 Multi-Purpose Room #1, except when the do not disturb switch is enabled.
7. With a DC voltage fire alarm system interface which disables the system when required.
8. With a VCR for the audio/video reproduction of VHS-type video

cassettes (Option No. OP101.1).
9. With four (4) video output and control receptacles for the distribution of Video to the portable projector locations and to the wall-mounted TV receptacles.
10. With two (2) six-foot wide motorized screens on east wall.
11. With provisions for a portable video projector. Projector to be self-contained and controlled by hand-held wireless remote control.

1.3.17 Room Z341 Media Projection Room, Audio-Visual and Sound System (Option No. OP101.1)

1. With a compact disc player and audio cassette deck for pre-recorded audio material playback connected to a rack-mounted mixer.
2. Using a floor box flush-mounted in platform floor at lectern location. Receptacles in floor box are as follows:

   a. Audio Receptacles.
   b. Data Receptacles (As shown elsewhere in TC drawing series).
   c. Video Receptacles.
   d. Computer Video Input Receptacles (PC and Macintosh) for laptop or desktop computer presentations.
   e. With audio-visual interface receptacles for reproduction of the audio portion of multi-media devices.

3. Using two (2) wireless lavaliere microphone systems.
4. Microphone receptacles and wireless microphone systems are connected to an automatic microphone mixer located in main equipment rack.
5. All sound and audio-visual equipment is controlled by a touch screen controller and control system. Using sixteen (16) recessed ceiling-mounted loudspeakers.
6. With a central paging system interface and equipment which allows the central paging system to use the loudspeakers to make announcements to listeners within Z341 Media Projection Room, except when the do not disturb switch is enabled.
7. With a DC voltage fire alarm system interface which disables the system when required.
8. With a ceiling-mounted projector located on retractable ceiling lift. Projector and ceiling lift to be controlled by touch screen panels and control system.
9. With a VCR for the audio/ video reproduction of VHS-type video cassettes. Controlled by control system.
10. With an automatic video switcher for control of Video sources and audio for those video sources.
11. With video output receptacle(s) for the distribution of Video to the ceiling-mounted projector.
12. With a twelve foot wide (nominal) motorized screen on west wall.
13. Provisions for connections to future video teleconferencing within conference room Z322 with conduit and wiring in equipment rack.

1.3.18 Gymnasium Y440

1. Using eight (8) wired microphone receptacles connected to a rack-mounted mixer for sound reinforcement.
2. With a compact disc/ audio cassette deck combination deck for pre-recorded audio material playback.
3. With an AM/FM tuner for reproduction of commercial and campus-wide radio signals from the FM radio antenna distribution system.
4. Using a cable TV converter for reproduction of the audio portion of Army educational television.
5. Using three (3) audio-visual interface receptacles for reproduction of the audio portion of entertainment television from portable televisions.
6. With a push-to-talk announcement microphone in main equipment rack for local announcements.
7. Using a floor standing equipment rack located in sound closet Y443.
8. With room configuration selections at equipment rack using digital signal processing.
9. Using three (3) loudspeaker clusters (one at each court) consisting of three (3) loudspeakers each (Nine (9) loudspeakers total).
10. Using portable operator-controlled mixer cases for use during games with an audience.

    a. Mixing case is used at scorer's table locations.
    b. Plugs into any of four floor boxes (one at each courtside) and plugs into the main equipment rack.
    c. Includes CD Player/Cassette Deck
    q Includes Wireless Hand-Held Micro phone

11. With a central paging system interface and equipment which allows the central paging system to use the loudspeakers to make announcements to listeners within Y440 Gymnasium, except when the do not disturb switch is enabled.
12. With a DC voltage fire alarm system interface which disables the system when required.

1.3.19 FM radio Distribution System

1. Provides distribution of FM radio signals to tuners and individual sound systems as described above.
2. With a roof-mounted FM receive Antenna and weatherproof FM preamplifier.
3. With all rack-mounted equipment located in central paging main equipment rack in Tel/Data room Y203.
4. With all cabling and Antenna receptacles required for a complete and working system.
5. With an FM distribution amplifier located in the Sports Medicine common equipment rack which distributes FM radios signals from the FM radio antenna distribution system to the therapy equipment racks.

1.4 ACOUSTICAL PERFORMANCE REQUIREMENTS:

The overall space-average acoustical frequency response criterion, as measured within the coverage area of the central paging system

loudspeakers, is within +3 dB of a spectrum which is flat from 250 to 2500 Hz and slopes downward thereafter at a rate of 3 dB per octave to at least 8,000 Hz. The overall space-average acoustical frequency response criterion, as measured within the coverage area of the typical gymnasium and pool loudspeakers, is within +3 dB of a spectrum which is flat from 125 to 2500 Hz and slopes downward thereafter at a rate of 3 dB per octave to 12,500 Hz. All other acoustical frequency response criterion are at the reasonable discretion of the contracting officer. Test signals shall be broad-band "pink" noise applied to any system input, measured using 1/3-octave filters centered on ANSI preferred frequencies.

Measurements of system performance will be made using a calibrated ANSI or IEC precision sound level meter set for "slow" meter damping and flat response, 4 feet above the floor (seated ear height) within the system coverage area. All interior finishes and furnishing shall be in place, and system gain shall be adjusted to provide levels of at least 70 dB or 10 dB above background noise levels, whichever is higher, at the measuring locations for these tests.

To meet the acoustical performance criteria, be responsible for:

1. Use of the equipment specified in the manner specified.

2. Each component's conformance with its manufacturer's published specifications and other requirements as stated herein.

3. Detailed checking of each item of equipment provided, each portion of the installation, and of the complete installation to find and remedy any defects therein.

4. Setting and documenting the adjustments of loudspeakers, equalizers, and other signal-processing equipment, pads, and gain controls and, if so directed by the contracting officer's representative making the further adjustment of these items , providing additional field-assembled resistive pads and/or resistor-capacitor equalizers.

1.5 GUARANTEE AND SERVICE

Guarantee all equipment and installations to be free of faulty workmanship and defective components for a period of one year from date of final acceptance.

During this period, replace defective materials and repair faulty workmanship within 24 hours of report of malfunction at no additional cost to the contracting officer. If specified materials and installations cannot be made good within 24 hours of report of malfunction, provide approved temporary alternate equipment and facilities, complete and operational, within 24 hours of report of malfunction, at no additional cost to the Contracting Ffficer.

Maintain a 24-hour-per-day, 365-day-per-year telephone response facility for receipt of service calls.

Respond to service calls and provide restoration of service within the time limits stated, weekends and holidays included.

Provide at no additional charge preventive maintenance service for a period of one year after final acceptance of installation. This service shall consist of at least two semi-annual visits to the site for checking and adjustment of equipment.

1.6 INSTRUCTION

Provide instruction of designated operating personnel in addition to the contracting officer. This shall include at least twelve (12) hours of instruction in the operation, care and maintenance of the installation. Schedule instruction at the mutual convenience of the Contracting Officer and contractor, after demonstration and acceptance testing.

PART 2 PRODUCTS

2.1 INSTALLATION MATERIALS

2.1.1 Input Lines

For all microphone-level wiring (below -20 dBm), line-level wiring (up to +30 dBm) and control wiring use cable with a foil-shielded pair of stranded #22 AWG conductors, with a stranded shield drain wire. For single pair, use a miniature cable, nominal outside diameter 0.135". Use of multi-pair cable is optional.

Provide: Belden 8451	-or-
Columbia C2516	-or-
Manhattan M4326	-or-
Mohawk 1671	-or-
West Penn 452	

2.1.2 Loudspeaker Wiring

Provide unshielded loudspeaker wiring for connection to loudspeakers and loudspeaker receptacles. For lines in rigid conduit or electrical tubing, use stranded or solid conductors. For lines in flexible conduit or electrical tubing and for all wiring to equipment within equipment racks, use only stranded conductors. Use color-coded #12 AWG conductors for all loudspeaker wiring except for wiring to central paging system, ceiling-mounted loudspeakers using 70.7 Volt lines, which may be color-coded #18 AWG cables.

2.1.3 Video Cable

Provide digital capable video cable and connectors for this project. Provide all connectors with true 75-ohm impedance. Replace any 50-ohm connectors used, except on manufactured equipment, with 75 ohm connectors as appropriate for the equipment and signal to be passed. Where the design requires that a group of cables be specified as equal length, but no length is specified, the Contractor shall determine the longest length required in the group, and match all cables in the group to this length. All RGB cable

sets shall have each cable cut to identical lengths within the cable set. Provide Video cable from the following manufacturers exhibiting the characteristics of Belden 1505A or Belden 8281:

Belden -or-
Canare -or-
Clark -or-
Gepco

2.1.4 Video Connectors

Provide digital capable connectors for this project. Provide all connectors with true 75-ohm impedance. Replace any 50-ohm connectors used, except on manufactured equipment, with 75 ohm connectors as appropriate for the equipment and signal to be passed. Connectors from the following manufacturers shall be considered acceptable. Install connectors appropriate for the equipment interface:

Provide connectors as manufactured by:

ADC -or-
Amp -or-
Amphenol -or-
Canare -or-
H.H. Smith -or-
Kings -or-
Ponoma -or-
Switchcraft -or-
Trompeter

2.1.5 Microphone Extension Cable

Provide 25-foot long rubber-covered flexible microphone extension cables. Fit each flexible extension cable with black three conductor XLR microphone receptacles as specified herein. Provide one (1) microphone extension cable with each "loose" microphone provided, including announcement microphones and miniture unidirectional stand microphones.

Provide:

Assemblies
Wireworks C25 -or-
Pro Co M25 -or-
approved equal assembly

Cable
Belden 8412 cable -or-
approved equal

2.1.6 Female Microphone Input Receptacle

Mount on input connection plates. Provide:

Neutrik NC3FP -or-

Switchcraft D3FDB

2.1.7 Female Line Input Receptacle

Mount on input connection plates. Provide:

Neutrik NC3FP -or-
Switchcraft D3FD

2.1.8 Phono Receptacles:

Use female phono ("RCA") panel mounted jacks, as shown below, which are insulated from the mounting panel and which use D-holes or other positive means to prevent jack rotation. Provide sufficient clearance so that inserted plugs do not short to the plate. Provide:

H.H. Smith 1203 with 1203-1 washer -or-
Switchcraft 3511 -or-
approved equal

2.1.9 Input Connection Plate

Provide brushed stainless steel mounting plate for receptacles. Use engraved lettering on plates.

2.1.10 Isolation Transformer

Provide at each independent sound system rack for connection to central paging line level signals. Provide:

Jensen JT-11SSP-6M

2.1.11 Line Input Extension Cable

Provide 15 ft. long 2 conductor shielded extension cable terminated with male, 3-pin XLR. Connect to output of portable mixers located in Portable Equipment Racks and Roll-around Equipment Racks as required by the documents. Provide strain relief as required.

Provide Connector: Neutrik NC3MP -or-
Switchcraft A3M

Provide Cable: Belden 8412 cable -or-
approved equal

Quantity: As required

2.2 CENTRAL PAGING SYSTEM (OPTION No. OP103)

Note: All items specified below under Paragraphs 2.2.1 and 2.2.2 shall be part of Option No. OP103.

2.2.1 Input Equipment

2.2.1.1 Paging Microphone Station

Provide desktop assembly complete with gooseneck microphone. Provide system compatible with paging router/multiprocessor.

Provide and install all wiring and connectors necessary to connect the paging Microphone Station to the Paging Router/Multiprocessor specified herein.

Provide:

PageMatrix Station Ten Desktop -or-
IED T508DT-G

Quantity:

One (1), B102 Center Lobby
One (1), Z320 Administration

2.2.1.2 Paging Router/Multiprocessor

Provide system capable of routing a minimum of four (4) paging sources to a minimum of sixty (60) system outputs. Provide complete system as manufactured by Peavey Media Matrix or Innovative Electronic Designs (IED) 8000 Series.

Provide and program all software as required by the documents. Program software to provide signal processing and routing functions as shown on drawing PG-2.13. Configure system hardware and program the software to provide all functions detailed in the functional requirements.

Provide system with at least thirty-two (32) control inputs and eight (8) logic control outputs.

Connect each of twenty-three (23) "Do Not Disturb" switches located in the main equipment racks associated with independent audio systems to the control inputs as required by the documents. Note that the four audio systems in the Sports Medicine Area share a common "Do Not Disturb" Switch. Program the software to turn off the Paging Router/Multiprocessor audio output corresponding to the independent audio system and indicate on the paging microphone stations specified herein that the independent audio system is in "Do Not Disturb" mode and therefore will not receive normal pages.

Connect the coils of the Master Emergency Page Switching Relays to logic control outputs as required by the documents. Program software to trigger the logic outputs and energize the coils of the Master Emergency Page Switching Relays during emergency pages. Provide any additional electronic components and wiring necessary to energize the relay coils with the logic control outputs. Program software such that emergency pages will automatically enable all Paging Router/Multiprocessor audio outputs including any that may be in "Do Not Disturb" Mode.

Connect the switch of the Master Fire-Alarm Switching Relay to a control

input as required by the documents. Wire relay switch such that the control input is connected to ground when the relay coil is energized. Program the software such that all Paging Router/Multiprocessor audio outputs are turned off when this control input is connected to ground. Program the software to indicate on the paging microphone stations specified herein that the paging system has been disabled due to a fire alarm.

Provide Peavey System, as listed below:

Mainframe: Peavey MM760nt Mainframe
I/O Converter: Peavey MM-8830 Digital Interface
DSP Board: Peavey MM DSP Digital Signal Processing Boards
Paging Router: Peavey MM Page Matrix Command Center

-or-

Provide IED System:

Mainframe: IED8001MF
I/O Card: IED8044AIO
Output Card: IED8008AO
DSP Card: IED8044DSP
CPU Card: IED8001CPU
Logic I/O Card: IED8088LIO
Micstation Control Card: IED8004C
Power Supply: IED8102PS

Quantity:

One (1) complete Peavey System -or-
One (1) complete IED System

Note: The model numbers of equipment shown above are descriptive of the systems required. The contractor is responsible for appropriate selection of equipment and quantities as required by the documents.

2.2.1.3 Paging Microphone Station Input Receptacle

Provide input receptacle for connection to Paging Microphone Station. Mount on single gang standard electrical box as required by the documents.

Provide: RJ-45 Connector

Quantity:

One (1), B102 Center Lobby;
One (1), Z320 Administration.

2.2.2 AUDIO CONTROL AND AMPLIFICATION EQUIPMENT

2.2.2.1 Power Amplifiers For Central Paging Loudspeakers

Provide dual channel or multi-channel power amplifier with balanced

bridging inputs and variable speed fan. Provide amplifiers which provide at least 200 watts output (nominal) per channel into 70.7 volts.

Provide:

Crown CT-410 -or-
Crest CKV400 -or-
QSC CX302V -or-
QSC CX204V

Quantity:

Twelve (12) for Crown, Crest or QSC 302V options -or-
Six (6) for QSC CX204V option

2.2.2.2 Audio Equipment Rack

Use 25-inch deep rack with bolt-together frame, side panels, rear door, and front locking door, which accepts extra panel-mounting angles. Provide equipment racks capable of being ganged together and gang together whenever possible. Fill in unused rack space with blank solid or ventilating panels. Provide rack, accessories, and filler panels in smooth (not wrinkle) matte black finish.

Provide:

Middle Atlantic Assembly -or-
Raxxess Assembly -or-
Soundolier Assembly -or-
Lowell Assembly

Quantity:

As Required

2.2.2.3 Rack Power Wiring

Equip audio equipment rack with permanently-mounted 3-conductor isolated-ground AC power receptacles with sufficient outlets to meet central paging system and FM distribution system needs plus at least two (2) spares. Connected to wall-mounted power receptacles as indicated in the E series drawings.

Provide:

Soundolier SACS-5F, SACS-1F -or-
One Power CQ100A/20IG, CQ20A/IG -or-
Lowell RPC-1-IG

Quantity:

As required

2.2.2.4 System Power Control

Provide a relay-controlled power switching system with a master power switch and power-on indicator for the system. Connect the master power switch switch to control each receptacle in the rack except for one of the spare receptacles. Label unswitched receptacles "UNSWITCHED". Connect power for rack illumination to bypass the system master power switch. Provide a means to cycle the system power amplifiers on successively at intervals of approximately one second whenever the power switch is activated.

Provide:

Soundolier SACR-191 -or-
One Power CQ15A -or-
Lowell SCS-3

Quantity:

One (1)

2.2.2.5 Power Amplifier Monitor Selector

Provide two-pole, twelve-position rotary switches with adjustable stop. Contacts must be self-wiping and non-shorting. Supply the switch with a 1/4" shaft, rated for minimum life of 50,000 cycles, and capable of switching 1.0 amp minimum at 120 VAC.

The switch assembly may use a 3/8-inch-diameter threaded-bushing panel mount; mount through panel using lockwasher and anti-rotation lug. Alternatively, switch assembly may attach to panel using two or more machine screws. Also provide double-set screw knob having a pointer; machine a flat onto the switch's shaft to provide positive alignment of pointer with panel's markings. Connect master rotary switch to 30 dB pad and powered monitor loudspeaker in central paging system main equipment rack. Also connect to monitor test point.

Provide:

Shallco 221-CB-12 -or-
Grayhill 44D30-02-AJN

Quantity:

Three (3)

2.2.2.6 Monitor Test Point

Provide 3/4"-spacing double binding post.

Provide:

HH Smith 269RB -or-
Pomona 4243-O

Quantity:

One (1)

2.2.2.7 Regulated 24V DC Power Supply

Provide regulated 24 VDC power supply each connected in series with the switch of a Master Emergency Page Switching Relay. Use one (1) power supply to energize the coils of the Audio Switching Relays specified herein and located in each of twenty-three (23) audio equipment racks Use one (1) power supply to energize the relay coils in the priority loudspeaker attenuators located in the Central Paging System.

Provide: Soundolier PS24-2R -or-
Approved Equal

Quantity: Two (2)

2.2.2.8 "Do not Disturb" Switch

Provide white toggle switch for each of twenty-three (23) independent audio systems and mount on rack panel in the main audio equipment rack associated with that system. Connect each switch to the control inputs of specified-Paging Router/Multiprocessor in the main equipment rack(s)for the Central Paging System as indicated on the documents. Engrave the label "DO NOT DISTURB" on one side and the label "NORMAL" on the other side. Configure such that it connects the control input to ground when in the "Do Not Disturb" position.

Provide: Cutler-Hammer 8381K122C -or-
Approved Equal

Quantity: Twenty-three (23)

2.2.2.9 Master Fire Alarm Switching Relay

Provide relay appropriate for connecting a control input of the specified-Paging Router/Multiprocessor to ground. Configure relay switch such that the connection is made when its coil is energized by a 24 VDC activation voltage from the Fire Alarm System as required by the documents. Direct connection of relay coil to fire alarm system is not included in this Section. Do, however, connect the relay coil to properly labeled terminal strips in the Central Paging main equipment rack to accept the activation voltage from the fire alarm system provided elsewhere.

Provide: FSR LK-2 with relay track -or-
Potter & Brumfield R10-E1Y2-V700 with 27E461 socket, 24A071 mounting clip, 24A110 mounting track, and 20C259 hold-down strap -or-
Soundolier RLM-24 with RPM-Series relay module

Quantity: One (1)

2.2.2.10 Emergency Page Switching Relay

Provide relay appropriate for switching 24 VDC power lines with a coil activation voltage of 5 VDC. Connect the relay coil to logic control outputs of the specified-Paging Router/Multiprocessor as required by the documents. Provide any additional electronic components and wiring necessary to energize the relay coils with the logic control outputs. Connect the relay switch to a 24 VDC power supply specified herein. Use One (1) relay switch to energize the coils of the emergency page Audio Switching Relays located in the main equipment racks for each of twenty-six (26) independent systems as required by the documents. Use One (1) relay switch to energize the coils of the priority loudspeaker attenuators located in the Central Paging main equipment rack(s) as required by the documents.

Provide:
Potter & Brumfield R10-E1-X2-V28 with 27E461 socket, 24A071 mounting clip, 24A110 mounting track, and 20C259 hold-down strap
-or-
Approved equal

Quantity: Two (2)

2.2.2.11 DC Power Lines

Provide unshielded cable with a twisted pair of stranded #18 AWG conductors with nominal outside diameter 0.234". Use this wiring for DC power distribution and to make closed contacts with the control inputs of the Paging Router/Multiprocessor.

Provide: Belden 8461 -or-
West Penn 224

Quantity: As required

2.2.2.12 Isolation Transformer

Provide at the audio outputs of the Paging Router/Multiprocessor connected to each of twenty-three (23) independent audio systems. Note that the four audio systems in the Sports Medicine Area share a common audio feed from the paging system.

Provide: Jensen JT-11SSP-6M

Quantity: Twenty-three (23)

2.2.3 LOUDSPEAKER COMPONENTS (BASE BID)

2.2.3.1 Ceiling Mounted Loudspeakers, 70.7 Volt Loudspeaker/Transformer Assembly

Provide 4-inch loudspeaker for paging distribution throughout facility. Connect to 4 watt taps as required by the documents. Locate in ceiling as required by the documents. Mount in loudspeaker backbox and provide with loudspeaker grille.

Provide:

Soundolier FC104T47 -or-
Lowell JR410-T470

Quantity:

Four hundred thirty-six (436), includes spares

2.2.3.2 Ceiling-Mounted Loudspeaker Backbox

Provide backbox for ceiling-mounted, 70.7 Volt Loudspeaker/Transformer Assembly.

Provide:

Soundolier 96-4 -or-
Lowell CP4

Quantity:

Four hundred thirty-six (436), includes spares

2.2.3.3 Loudspeaker Grille

Attach to loudspeaker backboxes and 70.7 Volt Loudspeaker/Transformer Assembly.

Provide:

Soundolier 51-4 -or-
Lowell WB-4

Quantity:

Four hundred thirty-six (436), includes spares

2.2.3.4 Ceiling Mounted Loudspeaker, Surface Mount

Provide:

Soundolier C803A-T87 -or-
Lowell CT830-T870

Quantity:

Two (2), 0107 Corridor
One (1), 0118 Entry
Two (2), 0132 South Corridor

2.2.3.5 Wall-mounted Loudspeaker

Tap at 8 Watts and connect as required by the documents. Mount on wall or

floor as required by the documents. Adjust aiming angles for optimum coverage.

Provide:

Soundolier W-130T -or-
Lowell FMS-30T

Quantity:

Six (6), Z307 Climbing Wall

2.2.3.6 Line Array Loudspeakers

Provide line array loudspeakers and mount as shown on drawings, approximately 10'-0" A.F.F.

Provide:

Eastern Acoustic Works LS432-MT -or-
Bose 502A Controlled Array with CVT-5 -or-
Approved equal

Quantity:

Six (6), Y450 Corridor

2.2.3.7 Full Range Loudspeakers

Provide full-range loudspeaker. Tap at 100 Watts and connect as required on the documents. Provide mounting bracket that allows the loudspeakers to be aimed at least 30 degrees below horizontal. Adjust aiming angle for optimum coverage

Provide:

Electro-Voice Sx300PIX

Quantity:

One (1), B102 Center Lobby
Two (2), B202 Center Lobby
Two (2), A202 Hayes Gymnasium

2.2.3.8 Powered Monitor Loudspeaker

Provide monitor loudspeaker with integral power amplifier and with mounting bracket. Connect to power amplifier monitor selector and mount at top of central rack location.

Provide:

Anchor AN1000X with SB-1 mounting bracket -or-
Fostex 6301B/EAV with single unit rack mount -or-

Galaxy Hot Spot PA III with mounting bracket and with all black finish

Quantity: One (1) (Option No. OP103)

2.2.3.9 Priority Loudspeaker Attenuator, 10 Watts

Provide switched autotransformer type rated at 10 watts. Provide wall-mounted attenuator with priority relay. Mount in rooms as required by the documents. Connect priority relay coil to the switch of one of the Master Emergency Page Switching Relays.

Provide Wall-mounted:

Soundolier AT-10A-PA -or-
Lowell 10LC2-PA

Quantity: Twenty-Eight (28)

2.2.3.10 Loudspeaker Attenuator, 10 Watts

Provide switched autotransformer type rated at 10 watts. Provide rack-mounted attenuator as required by the documents.

Provide:

Soundolier AT-10A-RM -or-
Lowell 10LC2-RM

Quantity: Forty-Three (43) (Option No. OP103)

2.2.3.11 Loudspeaker Attenuator, 35 Watts

Provide switched autotransformer type rated at 35 watts. Provide rack-mounted attenuator as required by the documents.

Provide:

Soundolier AT-35A-RM -or-
Lowell 35LC2-RM

Quantity: Twenty-Seven (27) (Option No. OP103)

2.2.3.12 Loudspeaker Attenuator, 75 Watts

Provide switched autotransformer type rated at 75 watts. Provide rack-mounted attenuator as required by the documents.

Provide:

Soundolier AT-100A-RM -or-
Lowell 75LC2-RM

Quantity: Fourteen (14) (Option No. OP103)

2.3 POOL SOUND SYSTEMS (OPTION No. OP101)

Note: All items specified below under Paragraphs 2.3.1, 2.3.2 and 2.3.4 shall be part of Option No. OP101.

2.3.1 INPUT EQUIPMENT

2.3.1.1 Push to Talk Microphone

Provide push to talk microphone at wall mounted equipment rack for local announcements. Provide with 12-inch gooseneck and flange. Mount flange on rackmount panel.

Provide: Shure 515SBG-12XF

Quantity:

One (1), Y040 Instructional Pool
One (1), Z020 Intramural Pool

2.3.1.2 Announcement Microphone

Provide a cardioid microphone for sound reinforcement at events. Provide complete with stand adapters as necessary.

Provide:

Shure SM58-LC -or-
Electro-Voice N/D267 -or-
Audix OM-3 xb

Quantity:

Five (5), Y040 Instructional Pool
Five (5), Z020 Intramural Pool

2.3.1.3 Microphone Footswitch Assembly

Provide water-resistant footswitch for hands-free switching on and off of announcement microphone located at poolside. Assembly will consist of a footswitch and a 25-foot long rubber covered flexible microphone extension cable with a black three conductor XLR Microphone Connector. Use switch to short pins two and three together in the normally closed position (off). See wiring details on drawing PG2.20.

Provide Footswitch:

Altech FM1 SU1R F2 -or-
Approved Equal

Quantity:

Five (5), Y040 Instructional Pool

Five (5), Z020 Intramural Pool

Provide Cable:

Belden 8412 cable -or-
approved equal

Quantity:

Five (5), Y040 Instructional Pool
Five (5), Z020 Intramural Pool

Provide Connector:

Switchcraft A3FD -or-
Neutrik NC3FX

Quantity:

Five (5), Y040 Instructional Pool
Five (5), Z020 Intramural Pool

2.3.1.4 Microphone Footswitch Receptacle

Provide male 3-conductor XLR receptacle with weather-resistant cover plate for connection of footswitch. Mount with microphone input receptacles.

Provide:

Mystery Electronics RPF50M -or-
Switchcraft D3M w/ waterproof cover (Hubbel or equivalent) -or-
Neutrik NC3MP w/ waterproof cover (Hubbel or equivalent)

Quantity:

Five (5), Y040 Instructional Pool
Five (5), Z020 Intramural Pool

2.3.2 AUDIO CONTROL AND AMPLIFICATION EQUIPMENT

2.3.2.1 Rack Mount Mixer

Provide rack-mounted mixer with at least eight (8) line/microphone inputs.

Provide:

Rane MLM82 with equivalent XLR Panel -or-
Shure SCM800 with RKC800 -or-
Intelix 8002MCB with equivalent XLR Panel

Quantity:

One (1), Y040 Instructional Pool
One (1), Z020 Intramural Pool

2.3.2.2 Priority Mic/Line Mixer

Provide rack-mounted mixer with at least four stereo balanced or unbalanced line inputs and two mono microphone/line-level balanced inputs with ducking. Provide with remote control for input selection and master level control.

Provide:

Rane CP64 w/ ZR-1 -or-
Symetrix 450 w/ contractor-supplied controller

Quantity:

One (1), Y040 Instructional Pool
One (1), Z020 Intramural Pool

2.3.2.3 Digital Control Attenuator

Provide digital control attenuator with remote shaft encoder for remote volume control.

Provide: Oxmoor DCA-2 with RC-16

Quantity:

One (1), Y040 Instructional Pool
One (1), Z020 Intramural Pool

2.3.2.4 Feedback Suppressor

Provide: Sabine FBX-1020 -or-
Sure DFR11EQ

Quantity:

One (1), Y040 Instructional Pool
One (1), Z020 Intramural Pool

2.3.2.5 1/3-Octave Equalizer

Provide single channel, one third octave graphic equalizer. Mount in audio equipment rack.

Provide:

Rane GE30 with SC 3.5 security cover -or-
Klark - Teknik DN300B with SC P 2u security cover -or-
Symetrix 531E with security cover

Quantity:

One (1), Y040 Instructional Pool

One (1), Z020 Intramural Pool

2.3.2.6 Compressor/Limiter

Adjust to limit at 3dB below power amplifier rated full output. Set the compression ratio to 2:1 and adjust compression threshold for 3dB compression at limiting threshold. Provide complete with security cover.

Provide:

Symetrix 501 -or-
Rane DC24 (dual channel) -or-
DBX 1066A (dual channel)

Quantity:

One (1), Y040 Instructional Pool
One (1), Z020 Intramural Pool

2.3.2.7 Power Amplifiers For Loudspeakers

Provide dual channel power amplifiers with balanced bridging inputs. Provide amplifiers which provide at least 120 watts output (nominal) per channel into 8 ohms.

Provide:

Crown CT-410 -or-
QSC CX302 -or-
Crest CKS400

Quantity:

Two (2), Y040 Instructional Pool
Two (2), Z020 Intramural Pool

2.3.2.8 Audio Equipment Rack

Use 25 inch deep rack with bolt-together frame, side panels, rear door, and front locking door, which accepts extra panel-mounting angles. Fill in unused rack space with blank solid or ventilating panels. Provide rack, accessories, and filler panels in smooth (not wrinkle) matte black finish.

Provide:

Middle Atlantic Assembly -or-
Raxxess Assembly -or-
Soundolier Assembly -or-
Lowell Assembly

Quantity: One (1)

2.3.2.9 System Power Control

Provide single space rack mounted isolated-ground power distribution device with front mounted power switch. Mount with power switch on rear rack rails.

Provide:

Furman PL-PRO-G -or-
Approved Equal

Quantity:

One (1), Y040 Instructional Pool
One (1), Z020 Intramural Pool

2.3.2.10 Audio Switching Relays

Provide relay appropriate for switching line-level audio equipment. Connect one to incoming Emergency Page signal line and one to incoming Fire Alarm signal line as shown in functional diagram PG2.20.

Provide:

FSR LK-2 with relay track -or-
Potter & Brumfield R10-E1Y2-V700 with 27E461 socket, 24A071 mounting clip, 24A110 mounting track, and 20C259 hold-down strap
-or-
Soundolier RLM-24 with RPM-Series relay module

Quantity:

Two (2), Y040 Instructional Pool
Two (2), Z020 Intramural Pool

2.3.2.11 Monitor Test Points

Provide:

HH Smith 269RB -or-
Pomona 4243-O

Quantity:

Three (3), Y040 Instructional Pool
Three (3), Z020 Intramural Pool

2.3.3 LOUDSPEAKER COMPONENTS (BASE BID)

2.3.3.1 Full Range Loudspeakers

Provide weather-resistant two-way loudspeaker. Wire as shown on drawing PG2.20.

Provide additional protection from the weather by sealing the two ports

between the horn and woofer with plastic port covers. Also seal the connections with a flexible silicone caulking compound and install a monel screen (100 wires per lineal inch) behind the loudspeaker grille. Provide all weatherized mounting hardware needed for surface mounting on wall

Provide: Electro-Voice Sx300PI -or-
Technomad Berlin 15/H

Quantity:

Five (5), Y040 Instructional Pool
Five (5), Z020 Intramural Pool

2.3.4 AUDIO RECORDING AND PLAYBACK EQUIPMENT

2.3.4.1 Audio Cassette/Compact Disc Player

Provide device with independent compact disc and audio cassette playback functions with balanced and unbalanced outputs.

Provide:

Marantz PMD350 with XLR350PMD Balancing Kit -or-
Denon DN-T620 -or-
Tascam CD-A700

Quantity:

One (1), Y040 Instructional Pool
One (1), Z020 Intramural Pool

2.3.4.2 AM/FM Tuner

Provide complete with rack-mounting equipment.

Provide:

Denon TU-1500RD -or-
Marantz ST6000P

Quantity:

One (1), Y040 Instructional Pool
One (1), Z020 Intramural Pool

2.4 DPE WEIGHTS, CS STRENGTH DEVELOPMENT AND PE FITNESS SOUND SYSTEMS

Note: All items specified below under Article 2.4 shall be part of Option No. OP101, with the exception of items listed under Paragraphs 2.4.11, 2.4.14. 2.4.15, and 2.4.16.

2.4.1 Push to Talk Microphone

Provide push to talk microphone at wall mounted equipment rack for local

announcements. Provide with 18-inch gooseneck and flange. Mount flange on rackmount panel.

Provide: Shure 515SBG-12XF

Quantity:

One (1), A112 Sound Closet (PE Fitness)
One (1), A111 Sound Closet (CS Strength Development)
One (1), Y333 Sound Closet (DPE Weights)

2.4.2 Audio Cassette/Compact Disc Player

Provide device with independent compact disc and audio cassette playback functions with balanced and unbalanced outputs.

Provide:

Marantz PMD350 with XLR350PMD Balancing Kit -or-
Denon DN-T620 -or-
CD-A700

Quantity:

One (1), A112 Sound Closet (PE Fitness)
One (1), A111 Sound Closet (CS Strength Development)
One (1), Y333 Sound Closet (DPE Weights)

2.4.3 AM/FM Tuner

Provide complete with rack-mounting equipment.

Provide:

Denon TU-1500RD -or-
Marantz ST6000P

Quantity:

One (1), A112 Sound Closet (PE Fitness)
One (1), A111 Sound Closet (CS Strength Development)
One (1), Y333 Sound Closet (DPE Weights)

2.4.4 Priority Mic/Line Mixer

Provide rack-mounted mixer with at least four stereo balanced or unbalanced line inputs and two mono microphone/line-level balanced inputs with ducking. Provide with remote control for input selection and master level control.

Provide:

Rane CP64 w/ ZR-1 -or-
Symetrix 450 w/ contractor-supplied controller

Quantity:

One (1), A112 Sound Closet (PE Fitness)
One (1), A111 Sound Closet (CS Strength Development)
One (1), Y333 Sound Closet (DPE Weights)

2.4.5 Compressor/Limiter

Adjust to limit at 3dB below power amplifier rated full output. Set the compression ratio to 2:1 and adjust compression threshold for 3dB compression at limiting threshold. Provide complete with security cover.

Provide:

Symetrix 501 -or-
Rane DC24 (dual channel) -or-
DBX 1066A (dual channel)

Quantity:

One (1), A112 Sound Closet (PE Fitness)
One (1), A111 Sound Closet (CS Strength Development)
One (1), Y333 Sound Closet (DPE Weights)

2.4.6 Power Amplifier for Ceiling Mounted Loudspeakers

Use dual channel power amplifier with balanced bridging inputs and at least 100 watts output (nominal) per channel into 70 volts.

Provide:

Crown CT-210 -or-
Crest CKV 200 -or-
QSC CX302V

Quantity:

One (1), A112 Sound Closet (PE Fitness)
One (1), A111 Sound Closet (CS Strength Development)
One (1), Y333 Sound Closet (DPE Weights)

2.4.7 System Power Control

Provide single space rack mounted isolated-ground power distribution device with front mounted power switch. Mount with power switch on rear rack rails.

Provide:

Furman PL-PRO-G -or-
Approved Equal

Quantity:

One (1), A112 Sound Closet (PE Fitness)
One (1), A111 Sound Closet (CS Strength Development)
One (1), Y333 Sound Closet (DPE Weights)

2.4.8 Audio Switching Relays

Provide relay appropriate for switching line-level audio equipment. Connect one to incoming Emergency Page signal line and one to incoming Fire Alarm signal line as shown in functional diagram PG2.221.

Provide:

FSR LK-2 with relay track -or-
Potter & Brumfield R10-E1Y2-V700 with 27E461 socket, 24A071 mounting clip, 24A110 mounting track, and 20C259 hold-down strap -or-
Soundolier RLM-24 with RPM-Series relay module

Quantity:

Two (2), A112 Sound Closet (PE Fitness)
Two (2), A111 Sound Closet (CS Strength Development)
Two (2), Y333 Sound Closet (DPE Weights)

2.4.9 Wall-Mounted Audio Equipment Rack

Use wall-mounted rack with removable swingable front and rear sections and lockable front door. Leave at least three (3) empty rack spaces for future expansion, and fill in unused rack space with blank solid or ventilating panels. Provide rack, accessories, and filler panels in smooth (not wrinkle) matte black finish. Mount on wall as directed by contracting officer.

Provide:

Soundolier 320 Series -or-
Middle Atlantic DWR-xx-17 Series -or-
Lowell L53 Series -or-
Raxxess SWR-xx-17 series

Quantity:

One (1), A112 Sound Closet (PE Fitness)
One (1), A111 Sound Closet (CS Strength Development)
One (1), Y333 Sound Closet (DPE Weights)

2.4.10 Monitor Test Points

Provide:

HH Smith 269RB -or-
Pomona 4243-O

Quantity:

Two (2), A112 Sound Closet (PE Fitness)
Two (2), A111 Sound Closet (CS Strength Development)
Two (2), Y333 Sound Closet (DPE Weights)

2.4.11 Ceiling Mounted Loudspeakers, Recessed (Base Bid)

Provide: Soundolier FA138T167

Quantity:

Twenty (20), Y320 DPE Weights

2.4.12 Ceiling Loudspeaker Backbox and Grille, Recessed (Base Bid)

Provide: Soundolier FA97-8 Enclosure with FA51-8 Grille

Quantity: Twenty (20), Y320 DPE Weights

2.4.13 Ceiling Mounted Loudspeakers, Surface Mount (Base Bid)

Provide: Soundolier C803A-T87 or
Lowell CT830-T870

Quantity: Sixteen (16), A102 PE Fitness
Sixteen (16), A103 CS Strength Development

2.4.14 Ceiling Loudspeaker Backbox and Grille, Surface Mount (Base Bid)

Provide: Soundolier SM191-78 Enclosure with 164-8 Grille or
Lowell CB84 Enclosure with JG-8X Grille

Quantity:

Sixteen (16), A102 PE Fitness
Sixteen (16), A103 CS Strength Development

2.4.15 Videocassette Player/Recorder (Option No. OP101.1)

Provide and install a 4-head Monaural VHS player/recorder. Provide player/recorder capable of timer controlled playback, auto daylight savings time adjustment, multi lingual support, front panel pause button and backup capability of one month. Provide equipment capable of auto-repeat playback, dual mode shuttle control, and a 181 channel TV tuner (provide all cabling to video receptacle). Provide with BNC connector outputs that include baseband video and audio. Provide with "RCA-Type" audio connectors for connection to sound system. Provide videocassette player/recorder capable of being controlled by the remote control system specified. Also provide complete with rack-mount hardware and a handheld infrared remote controller.

Provide:

JVC SRTSIU -or-
Panasonic AG-1330 -or-
Sharp VC-H810U

Quantity:

One (1), A111 Sound Closet (CS Strength Development)
One (1), Y333 Sound Closet (DPE Weights)

2.4.16 Infrared Repeater (Option No. OP 101.1)

Provide an infrared repeater system to control the rack mounted VCR from within the rooms. Provide unit accepting modulation frequencies from 30 to 100 KHz with Receiver reception range greater than 30 feet and reception angle exceeding 55 degrees off axis. Provide unit capable of driving cable lengths of a least 200 feet. Provide unit that can operate on low voltage, 12 - 24 VDC without interference from fluorescent lighting. Provide receiver, cabling and transmitter. Affix transmitter to the equipment under control. Coordinate placement with Contracting Officer.

Provide with power supply.

Provide:

Xantech 480-00 Dinky Link or wall mount version of same -or-
Knoll IR22 or IR21 -or-
Adcom SPM-500H or XR-500H -or-
Approved Equal

Quantity:

One (1), A103 CS Strength Development
One (1), Y320 DPE Weights

2.4.17 Paging Ducker Assembly

Provide Paging Ducker Assembly consisting of a Paging Ducker and a Voice-Activated Relay. Provide Ducker with two line-level inputs, one for the Central Paging feed and one for the local program. Provide unit that has a switch which will can be activated by voice activated relay to fade local program input when central paging signal is present and ramp the local program input back up to unity gain after completion of the page. Connect as required by the documents. Adjust for maximum fade depth and minimum fade rate. Provide complete with 24VDC Power Supplies by same manufacturer sufficient to power all units.

Provide Paging Ducker: RDL ST-VP1 -or-
Approved Equal

Quantity: One (1), A111 Sound Closet (CS Strength Development)

Provide Voice-Activated Relay: RDL ST-ACR-1 -or-
Approved Equal

Quantity: One (1), A111 Sound Closet (CS Strength Development)

2.4.18 Handheld Wireless Microphone System

Provide all antennas, transmitters and receivers by a single manufacturer. Provide UHF system which allows simultaneous and independent operation from existing wireless systems at the school. Provide complete with rack-mounting kit and 1/2 wave antenna mounted near ceiling as required by the drawings. Mount receiver in audio equipment rack in A111. Provide with handheld microphone transmitter system.

Provide UHF System:

Shure UC24/58 system w/ two (2) UA-500 ½ wave antenna kits -or-
Lightspeed UDR-800/OM3 w/ two (2) equivalent ½ wave antenna kits

Quantity: One (1), A111 Sound Closet (CS Strength Development)

2.5 SPORTS MEDICINE SOUND SYSTEMS (OPTION No. OP 101)

Note: All items specified under this Article shall be work of Option No. OP 101, except for items specified under Paragraphs 2.5.10, 2.5.11, and 2.5.12.

Provide four separate music systems with the following designations and equipment rack rooms:

System Nam	Equipment Rack Room
Sports Medicine Common	Sound Closet Y136
DIA Therapy	DIA Taping Y149
DPE Therapy	DPE Storage Y134
PT Therapy	Trainer Office Y124

2.5.1 Audio Cassette/Compact Disc Player

Provide device with independent compact disc and audio cassette playback functions with balanced and unbalanced outputs.

Provide:

Marantz PMD350 with XLR350PMD Balancing Kit -or-
Denon DN-T620 -or-
Tascam CD-A700

Quantity:

One (1), Y136 Sound Closet (Common System)
One (1), Y134 DPE Storage (DPE Therapy)
One (1), Y124 Trainer Office (PT Therapy)
One (1), Y149 DIA Taping (DIA Therapy)

2.5.2 AM/FM Tuner

Provide complete with rack-mounting equipment.

Provide:

Denon TU-1500RD -or-
Marantz ST6000P

Quantity:

One (1), Y136 Sound Closet (Common System)
One (1), Y134 DPE Storage (DPE Therapy)
One (1), Y124 Trainer Office (PT Therap)
One (1), Y149 DIA Taping (DIA Therapy)

2.5.3 Priority Mic/Line Mixer

Provide rack-mounted mixer with at least four stereo balanced or unbalanced line inputs and two mono microphone/line-level balanced inputs with ducking. Provide with remote control for input selection and master level control.

Provide:

Rane CP64 w/ ZR-1 -or-
Symmetrix 450 w/ controller

Quantity:

One (1), Y136 Sound Closet (Common System)
One (1), Y134 DPE Storage (DPE Therapy)
One (1), Y124 Trainer Office (PT Therapy)
One (1), Y149 DIA Taping (DIA Therapy)

2.5.4 Distribution Amplifier

Provide distribution amplifier with at least four (4) outputs in Y136 Sound Closet equipment rack for distribution of central paging audio to Sports Medicine sound systems. Provide with transformer balanced outputs.

Provide:

ATI MLA400-2 -or-
Oxmoor 4X4T

Quantity: One (1), Y136 Sound Closet

2.5.5 Power Amplifier for Ceiling Mounted Loudspeakers

Use dual channel power amplifier with balanced bridging inputs and at least 100 watts output (nominal) per channel into 70 volts.

Provide:

Crown CT-210 -or-
Crest CKV 200 -or-

QSC CX302V

Quantity:

One (1), Y136 Sound Closet (Common System)
One (1), Y134 DPE Storage (DPE Therapy)
One (1), Y124 Trainer Office (PT Therapy)
One (1), Y149 DIA Taping (DIA Therapy)

2.5.6 System Power Control

Provide single space rack mounted isolated-ground power distribution device with front mounted power switch. Mount with power switch on rear rack rails.

Provide:

Furman PL-PRO-G -or-
Approved Equal

Quantity:

One (1), Y136 Sound Closet (Common System)
One (1), Y134 DPE Storage (DPE Therapy)
One (1), Y124 Trainer Office (PT Therapy)
One (1), Y149 DIA Taping (DIA Therap)

2.5.7 Audio Switching Relays

Provide relay appropriate for switching line-level audio equipment. Connect one to incoming Emergency Page signal line and one to incoming Fire Alarm signal line as shown in functional diagram PG2.212.

Provide:

FSR LK-2 with relay track -or-
Potter & Brumfield R10-E1Y2-V700 with 27E461 socket, 24A071 mounting clip, 24A110 mounting track, and 20C259 hold-down strap -or-
Soundolier RLM-24 with RPM-Series relay module

Quantity:

Two (2), Y136 Sound Closet (Common System)
Two (2), Y134 DPE Storage (DPE Therapy)
Two (2), Y124 Trainer Office (PT Therapy)
Two (2), Y149 DIA Taping (DIA Therapy)

2.5.8 Wall-Mounted Audio Equipment Rack

Use wall-mounted rack with removable swingable front and rear sections and lockable front door Leave at least three (3) empty rack spaces for future expansion, and fill in unused rack space with blank solid or ventilating panels. Provide rack, accessories, and filler panels in smooth (not wrinkle) matte black finish. Mount on wall as directed by Contracting

officer.

Provide:

Soundolier 320 Series -or-
Middle Atlantic DWR-xx-17 Series -or-
Lowell L53 Series -or-
Raxxess SWR-xx-17 series

Quantity:

One (1), Y136 Sound Closet (Common System)
One (1), Y134 DPE Storage (DPE Therapy)
One (1), Y124 Trainer Office (PT Therapy)
One (1), Y149 DIA Taping (DIA Therapy)

2.5.9 Monitor Test Points

Provide:

HH Smith 269RB -or-
Pomona 4243-O

Quantity:

Two (2), Y136 Sound Closet (Common System)
Two (2), Y134 DPE Storage (DPE Therapy)
Two (2), Y124 Trainer Office (PT Therapy)
Two (2), Y149 DIA Taping (DIA Therapy)

2.5.10 Ceiling Mounted Loudspeakers (Base Bid)

Provide recessed, ceiling mounted loudspeakers for designated systems in rooms indicated on drawings.

Provide: Soundolier FA138T167

Quantity:

Eighteen (18), Common System
Four (4), DPE Therapy
Five (5), PT Therapy
Six (6), DIA Therapy

2.5.11 Loudspeaker Backbox (Base Bid)

Provide: Soundolier FA97-8

Quantity:

Eighteen (18), Common System
Four (4), DPE Therapy
Five (5), PT Therapy
Six (6), DIA Therapy

2.5.12 Loudspeaker Grille (Base Bid)

Provide: Soundolier FA51-8

Quantity:

Eighteen (18), Common System
Four (4), DPE Therapy
Five (5), PT Therapy
Six (6), DIA Therapy

2.6 INTRAMURAL WRESTLING, AND BOXING SOUND SYSTEMS (OPTION OP101)

Note: All items specified under this Article shall be work of Option OP101, except items specified under Paragraph 2.6.9.

2.6.1 Push to Talk Microphone

Provide push to talk microphone at wall mounted equipment rack for local announcements. Provide with 12-inch gooseneck and flange. Mount flange on rackmount panel.

Provide: Shure 515SBG-12XF

Quantity:

One (1), Y225 Sound Closet (Intramural Wrestling)
One (1), Y227 Sound Closet (Intramural Wrestling)
One (1), Y234 Sound Closet (Intramural Wrestling)
One (1), Z229 Sound Closet (Intramural Wrestling)
One (1), Y437 Sound Closet (Boxing)
One (1), Y438 Sound Closet (Boxing)

2.6.2 Priority Mic/Line Mixer

Provide rack-mounted mixer with at least four stereo balanced or unbalanced line inputs and two mono microphone/line-level balanced inputs with ducking. Provide with remote control for input selection and master level control.

Provide:

Rane CP64 w/ ZR-1 -or-
Symetrix 450 w/ contractor-supplied controller

Quantity:

One (1), Y225 Sound Closet (Intramural Wrestling)
One (1), Y227 Sound Closet (Intramural Wrestling)
One (1), Y234 Sound Closet (Intramural Wrestling)
One (1), Z229 Sound Closet (Intramural Wrestling)
One (1), Y437 Sound Closet (Boxing)
One (1), Y438 Sound Closet (Boxing)

2.6.3 Compressor/Limiter

Adjust to limit at 3dB below power amplifier rated full output. Set the compression ratio to 2:1 and adjust compression threshold for 3dB compression at limiting threshold. Provide complete with security cover.

Provide:

Symetrix 501 -or-
Rane DC24 (dual channel) -or-
DBX 1066A (Dual Channel)

Quantity:

One (1), Y225 Sound Closet (Intramural Wrestling)
One (1), Y227 Sound Closet (Intramural Wrestling)
One (1), Y234 Sound Closet (Intramural Wrestling)
One (1), Z229 Sound Closet (Intramural Wrestling)
One (1), Y437 Sound Closet (Boxing)
One (1), Y438 Sound Closet (Boxing)

2.6.4 Power Amplifiers For Loudspeakers

Provide dual channel power amplifiers with balanced bridging inputs. Provide amplifiers which provide at least 150 watts output (nominal) per channel into 4 ohms and at least 100 watts output (nominal) per channel into 8 ohms.

Provide:

Crown CT-210 (w/o Fan) -or-
QSC USA 400 -or-
IRP PA-4020 -or-
Crest CKS 200

Quantity:

One (1), Y225 Sound Closet (Intramural Wrestling)
One (1), Y227 Sound Closet (Intramural Wrestling)
One (1), Y234 Sound Closet (Intramural Wrestling)
One (1), Z229 Sound Closet (Intramural Wrestling)
One (1), Y437 Sound Closet (Boxing)
One (1), Y438 Sound Closet (Boxing)

2.6.5 System Power Control

Provide single space rack mounted isolated-ground power distribution device with front mounted power switch. Mount with power switch on rear rack rails.

Provide:

Furman PL-PRO-G -or-
Approved Equal

Quantity:

One (1), Y225 Sound Closet (Intramural Wrestling)
One (1), Y227 Sound Closet (Intramural Wrestling)
One (1), Y234 Sound Closet (Intramural Wrestling)
One (1), Z229 Sound Closet (Intramural Wrestling)
One (1), Y437 Sound Closet (Boxing)
One (1), Y438 Sound Closet (Boxing)

2.6.6 Audio Switching Relays

Provide relay appropriate for switching line-level audio equipment. Connect one to incoming Emergency Page signal line and one to incoming Fire Alarm signal line as shown in functional diagram PG2.223.

Provide:

FSR LK-2 with relay track -or-
Potter & Brumfield R10-E1Y2-V700 with 27E461 socket, 24A071 mounting clip, 24A110 mounting track, and 20C259 hold-down strap -or-
Soundolier RLM-24 with RPM-Series relay module

Quantity:

One (1), Y225 Sound Closet (Intramural Wrestling)
One (1), Y227 Sound Closet (Intramural Wrestling)
One (1), Y234 Sound Closet (Intramural Wrestling)
One (1), Z229 Sound Closet (Intramural Wrestling)
One (1), Z240 Sound Closet (Boxing)
One (1), Y438 Sound Closet (Boxing)

2.6.7 Wall-Mounted Audio Equipment Rack

Use wall-mounted rack with removable swingable front and rear sections and lockable front door. Leave at least three (3) empty rack spaces for future expansion, and fill in unused rack space with blank solid or ventilating panels. Provide rack, accessories, and filler panels in smooth (not wrinkle) matte black finish. Mount on wall as directed by Contracting officer.

Provide:

Soundolier 320 Series -or-
Middle Atlantic Middle Atlantic DWR-xx-17 Series -or-
Lowell L53 Series -or-
Raxxess SWR-xx-17 series

Quantity:

One (1), Y225 Sound Closet (Intramural Wrestling)
One (1), Y227 Sound Closet (Intramural Wrestling)
One (1), Y234 Sound Closet (Intramural Wrestling)

One (1), Z229 Sound Closet (Intramural Wrestling)
One (1), Y437 Sound Closet (Boxing)
One (1), Y438 Sound Closet (Boxing)

2.6.8 Monitor Test Points

Provide:

HH Smith 269RB -or-
Pomona 4243-O

Quantity:

Two (2), Y225 Sound Closet (Intramural Wrestling)
Two (2), Y227 Sound Closet (Intramural Wrestling)
Two (2), Y234 Sound Closet (Intramural Wrestling)
Two (2), Z229 Sound Closet (Intramural Wrestling)
Two (2), Y437 Sound Closet (Boxing)
Two (2), Y438 Sound Closet (Boxing)

2.6.9 Ceiling Mounted Loudspeakers, Recessed (Base Bid)

Provide:

Soundolier FA138T167 -or-
Approved Equal

Quantity:

Two (2), Y520 Boxing Balcony
One (1), Y522 Boxing Office
Two (2), Y524 Boxing Balcony

2.6.10 Ceiling Loudspeaker Backbox and Grille, Recessed (Base Bid)

Provide:

Soundolier FA97-8 Enclosure with FA51-8 Grille -or-
Approved Equal

Quantity:

Two (2), Y520 Boxing Balcony
One (1), Y522 Boxing Office
Two (2), Y524 Boxing Balcony

2.6.11 Loudspeakers

Provide full-range loudspeakers with internal passive crossovers. Mount as directed by contracting officer. Provide with wall-mounting brackets.

Provide:

EAW JF60 -or-

Electro-Voice SX80 -or-
JBL Control 28

Quantity:

Two (2), Y221 Wrestling
Two (2), Y223 Wrestling
Two (2), Y224 Wrestling
Two (2), Z227 Intramural Wrestling
Two (2), Y435 Boxing
Two (2), Y436 Boxing

2.6.12 Audio Cassette/Compact Disc Player

Provide device with independent compact disc and audio cassette playback functions with balanced and unbalanced outputs.

Provide:

Marantz PMD350 with XLR350PMD Balancing Kit -or-
Denon DN-T620 -or-
Tascam CD-A700

Quantity:

One (1), Y225 Sound Closet (Intramural Wrestling)
One (1), Y227 Sound Closet (Intramural Wrestling)
One (1), Y234 Sound Closet (Intramural Wrestling)
One (1), Z229 Sound Closet (Intramural Wrestling)
One (1), Y437 Sound Closet (Boxing)
One (1), Y438 Sound Closet (Boxing)

2.7 VARSITY WRESTLING Z220 SOUND SYSTEM (OPTION No. 101)

Work of this Article is work of Option No. OP101, except for work listed under Paragraph 2.7.4.

2.7.1 ROLL-AROUND EQUIPMENT RACK

Provide roll-around equipment rack for use next to instructor. This roll-around equipment rack is to be used for Varsity Wrestling Z220.

2.7.1.1 Rack Mount Mixer

Provide rack-mounted mixer with at least eight (8) line/microphone inputs.

Provide:

Rane MLM82 with Equivalent XLR Panel -or-
Shure SCM800 with RKC800 -or-
Intelix 8002MCB with Equivalent XLR Panel

Quantity: One (1)

2.7.1.2 Audio Cassette/Compact Disc Player

Provide device with independent compact disc and audio cassette playback functions with balanced and unbalanced outputs.

Provide:

Marantz PMD350 with XLR350PMD Balancing Kit -or-
Denon DN-T620 -or-
Tascam CD-A700

Quantity: One (1)

2.7.1.3 Headset Wireless Microphone System

Provide all antennas, transmitters and receivers by a single manufacturer. Provide UHF system which allows simultaneous and independent operation from existing wireless systems at the school. Mount receiver and antennae in roll-around equipment rack. Provide with headset microphone system.

Provide UHF System:

Shure UC14/16 system -or-
Lightspeed UDR-800/TK170

Quantity: One (1)

2.7.1.4 Roll-Around Equipment Rack

Provide roll-around equipment rack to mount portable equipment. Equip rack with permanently mounted AC power 3-conductor grounded stripline rated for 15 amps, with outlets on 6" centers, extending height of rack. Provide Power on/off switch on rack panel, or on side of equipment rack as directed by contracting officer. Fill in unused rack space with blank solid or ventilating panels. Provide strain relief for long power extension cable with same length as corresponding line input extension cable. Provide complete with non-plastic castors which will not mar the floor.

Provide:

Raxxess CR-12/10 -or-
SKB 19-1010B -or-
Odyssey CXP110W

Quantity: One (1)

2.7.2 INPUT EQUIPMENT (OPTION No. OP101)

2.7.2.1 Push to Talk Microphone

Provide push to talk microphone at wall mounted equipment rack for local announcements. Provide with 18-inch gooseneck and flange. Mount flange on rack panel.

Provide: Shure 515SBG-12XF

Quantity: One (1), Z226 Sound Closet

2.7.2.2 A/V Line-Level Input Panel

Provide jacks, transformer and switch assembly to combine inputs from consumer-type ("Hi-Fi") playback equipment and match them to balanced line level inputs.

1. Phono Receptacles:

    1. Use female phono ("RCA") panel mounted jacks, as shown below, which are insulated from the mounting panel and which use D-holes or other positive means to prevent jack rotation. Provide sufficient clearance so that inserted plugs do not short to the plate.

        Provide:

            H.H. Smith 1203 with 1203-1 washer -or-
            Switchcraft 3511

        Quantity: Two (2)

    2. High Impedance to Line-Level Transformer:

        Provide:

            Sescom MI-22 -or-
            Approved Equal

        Quantity: One (1)

    3. Hum Cancel Switch

        Provide:

            Pro CO N-1 -or-
            Approved Equal

        Quantity: One (1)

2.7.3 AUDIO CONTROL AND AMPLIFICATION EQUIPMENT (OPTION No. OP101)

2.7.3.1 4-Channel Mixer

Provide microphone mixer with a four (4) microphone inputs (minimum) and one auxiliary line level input (minimum). Mount in main audio equipment rack.

Provide:

Shure SCM-268 -or-

ATI MX100 w/ XP100

Quantity: One (1), Z226 Sound Closet

2.7.3.2 Priority Mic/Line Mixer

Provide rack-mounted mixer with at least four stereo balanced or unbalanced line inputs and two mono microphone/line-level balanced inputs with ducking. Provide with remote control for input selection and master level control.

Provide:

Rane CP64 w/ ZR-1 -or-
Symetrix 450 w/ contractor-supplied controller

Quantity: One (1), Z226 Sound Closet

2.7.3.3 Buffer/Distribution Amplifier

Provide buffer/distribution amplifier for mixing of line level sources. Mount in main audio equipment rack.

Provide:

ATI MLA400-2
Oxmoor 4X4T

Quantity: One (1), Z226 Sound Closet

2.7.3.4 1/3-Octave Equalizer

Provide single channel, one third octave graphic equalizer. Mount in main audio equipment rack.

Provide:

Rane GE30 with SC 3.5 security cover -or-
Klark - Teknik DN300B with SC P 2u security cover -or-
Symetrix 531E with security cover

Quantity: One (1), Z226 Sound Closet

2.7.3.5 Compressor/Limiter

Adjust to limit at 3dB below power amplifier rated full output. Set the compression ratio to 2:1 and adjust compression threshold for 3dB compression at limiting threshold. Provide complete with security cover.

Provide:

Symetrix 501 -or-
Rane DC24 (dual channel) -or-
DBX 1066A (Dual Channel)

Quantity: One (1), Z226 Sound Closet

2.7.3.6 Power Amplifier for Ceiling Mounted Loudspeakers

Use dual channel power amplifier with balanced bridging inputs and at least 100 watts output (nominal) per channel into 70 volts.

Provide:

Crown CT-210 -or-
Crest CKV 200 -or-
CX302V

Quantity: One (1), Z226 Sound Closet

2.7.3.7 System Power Control

Provide single space rack mounted isolated-ground power distribution device with front mounted power switch. Mount with power switch on rear rack rails.

Provide:

Furman PL-PRO-G -or-
Approved Equal

Quantity: One (1), Z226 Sound Closet

2.7.3.8 Audio Switching Relays

Provide relay appropriate for switching line-level audio equipment. Connect one to incoming Emergency Page signal line and one to incoming Fire Alarm signal line as shown in functional diagram PG2.224.

Provide:

FSR LK-2 with relay track -or-
Potter & Brumfield R10-E1Y2-V700 with 27E461 socket, 24A071 mounting clip, 24A110 mounting track, and 20C259 hold-down strap -or-
Soundolier RLM-24 with RPM-Series relay module

Quantity: Two (2), Z226 Sound Closet

2.7.3.9 Wall-Mounted Audio Equipment Rack

Use wall-mounted rack with removable swingable front and rear sections lockable front door. Leave at least three (3) empty rack spaces for future expansion, and fill in unused rack space with blank solid or ventilating panels. Provide rack, accessories, and filler panels in smooth (not wrinkle) matte black finish. Mount on wall as directed by Contracting officer.

Provide:

Soundolier 320 Series -or-
Middle Atlantic DWR-xx-17 Series -or-
Lowell L53 Series -or-
Raxxess SWR-xx-17 series

Quantity: One (1), Z226 Sound Closet

2.7.3.10 Monitor Test Points

Provide:

HH Smith 269RB -or-
Pomona 4243-O

Quantity: Two (2), Z226 Sound Closet

2.7.4 LOUDSPEAKER COMPONENTS (BASE BID)

2.7.4.1 Ceiling Mounted Loudspeakers

Provide: Soundolier FA138T167

Quantity: Twenty-Seven (27), Z220 Varsity Wrestling

2.7.4.2 Loudspeaker Backbox

Provide: Soundolier FA97-8

Quantity: Twenty-Seven (27), Z220 Varsity Wrestling

2.7.4.3 Loudspeaker Grille

Provide: Soundolier FA51-8

Quantity: Twenty-Seven (27), Z220 Varsity Wrestling

2.7.5 VIDEO EQUIPMENT

2.7.5.1 Videocassette Player/Recorder

Provide and install a 4-head Monaural VHS player/recorder. Provide player/recorder capable of timer controlled playback, auto daylight savings time adjustment, multi lingual support, front panel pause button and backup capability of one month. Provide equipment capable of auto-repeat playback, dual mode shuttle control, and a 181 channel TV tuner (provide all cabling to video receptacle). Provide with BNC connector outputs that include baseband video and audio. Provide with "RCA-Type" audio connectors for connection to sound system. Provide videocassette player/recorder capable of being controlled by the remote control system specified. Also provide complete with rack-mount hardware and a handheld infrared remote controller.

Provide:

Panasonic AG-1330 -or-
JVC SRTSIU -or-
Sharp VC-H810U

Quantity: One (1), Z226 Sound Closet (Varsity Wrestling)

2.7.5.2 Infrared Repeater

Provide an infrared repeater system to control the rack mounted VCR from within the rooms. Provide unit accepting modulation frequencies from 30 to 100 KHz with Receiver reception range greater than 30 feet and reception angle exceeding 55 degrees off axis. Provide unit capable of driving cable lengths of a least 200 feet. Provide unit that can operate on low voltage, 12 - 24 VDC without interference from fluorescent lighting. Provide receiver, cabling and transmitter. Affix transmitter to the equipment under control. Coordinate placement with Contracting Officer. Provide with power supply.

Provide:

Xantech 480-00 Dinky Link or wall mount version of same -or-
Knoll IR22 or IR21 -or-
Adcom SPM-500H or XR-500H -or-
Approved Equal

Quantity:

One (1), Z220 Varsity Wrestling

2.7.5.3 Video Distribution Amplifier

Provide and install a one input, six-output video distribution amplifier. Provide unit with outputs that are individually buffered and amplified. Provide unit with amplifier capable of accepting video levels from 0.5 to 2.0 Volts peak to peak, adjustable to maintain a signal level of 1.0 volts peak to peak. Provide unit with a bandwidth of at least 6 MHz. Provide amplifier, power supply and rack mount. If the rack mount accepts more amplifiers than the system requires, provide blank cover plates for the rack mount. Adjust all video levels to 1.0 volts peak to peak.

Provide:

Extron Electronics CVDA 6 MX with rack mount -or-
Inline Inc. IN3218HR -or-
Altinex DA1706Sv -or-
Sigma VDA-26A -or-
Approved Equal

Quantity: One (1)

2.7.6 AUDIO RECORDING AND PLAYBACK EQUIPMENT (OPTION No. OP101)

2.7.6.1 5-Disc Compact Disc Player

Provide a 5-disc carousel type compact disc changer. Mount in main equipment rack.

Provide:

Denon DCM-360P -or-
Tascam CD-305 -or-
Marantz PMD370

Quantity: One (1), Z226 Sound Closet

2.7.6.2 Dual Well Audio Cassette Recorder/Player

Provide dual well cassette deck with recording and cassette duplication capabilities. Mount in main audio equipment rack.

Provide:

Tascam 202 MkIII -or-
Marantz PMD500 -or-
Denon DN-770R

Quantity: One (1), Z226 Sound Closet

2.7.6.3 AM/FM Tuner

Provide complete with rack-mounting equipment. Mount in main audio equipment rack.

Provide:

Denon TU-1500RD -or-
Marantz ST6000P

Quantity: One (1), Z226 Sound Closet

2.7.6.4 TV Tuner

Provide and install a television tuner. Provide all cabling to RF distribution system as required by the documents. Program into tuner all active channels, coordinate with contracting officer.

Provide tuner able to receive at least 125 channels based on the Broadcast or CATV channel allocation table. Provide with a 75-ohm antenna terminal, along with video and stereo audio outputs. Provide tuner equipped with front panel controls, as well as automatic and preset tuning functions.

Provide equipment able to be controlled by the Remote Control system using RS-232, Infrared or LAN connections. Provide with complete with rack-mounting hardware.

Provide:

Sony TU-1041 -or-
Contemporary Research 232-STA -or-
Crestron ST-TUNE

Quantity: One (1), Z226 Sound Closet

2.8 GYMNASIUM Y240 SOUND SYSTEM (OPTION No. OP101)

All items specified under this Article shall be work of Option No. OP101, except for items listed under Paragraph 2.7.4.

2.8.1 INPUT EQUIPMENT (OPTION No. OP101)

2.8.1.1 Push to Talk Microphone

Provide push to talk microphone at for local announcements. Provide with 18-inch gooseneck and flange. Mount flange and microphone on wall as directed by contracting officer.

Provide: Shure 515SBG-12XF

Quantity: One (1), Y245 CRD Office

2.8.1.2 Announcement Microphone

Provide a cardioid microphone with switch for sound reinforcement at events. Provide complete with stand adapters as necessary. Provide with flexible microphone cable.

Provide:

Shure SM58S-LC -or-
Electro-Voice N/D267 -or-
Audix OM-3 xb

Quantity: Two (2), Y240 Gymnasium

2.8.1.3 Microphone Floor Stand

Provide an adjustable black stand with 5/8" thread and round, weighted metal base.

Provide:

AKG KM-10/1-black -or-
Atlas MS-12CE -or-
On-Stage MS9201B

Quantity: Two (2), Y240 Gymnasium

2.8.1.4 A/V Interface Panel

Provide jacks, transformer and switch assembly to combine inputs from consumer-type ("Hi-Fi") playback equipment and match them to balanced

microphone level inputs.

Provide: Pro CO AVP-1

Quantity:

Three (3), Y240 Gymnasium
One (1), Y247 Sound Closet

2.8.1.5 Floor Box Assembly

Provide floor box with brass finish complete with backbox. Mount floor box flush with finished floor. Provide for wiring of components as required by the documents.

Provide: Mystery Electronics FMCA 3300 w/ BB3000D

Quantity: Four (4), Y240 Gymnasium

2.8.2 AUDIO PROCESSING AND RACKMOUNT EQUIPMENT (OPTION No. OP101)

2.8.2.1 Passive Audio Combiner

Provide passive audio combiner for line input connections.

Provide: RDL STD-600

Quantity: Two (2), Y247 Sound Closet

2.8.2.2 Priority Mic/Line Mixer

Provide rack-mounted mixer with at least four stereo balanced or unbalanced line inputs and two mono microphone/line-level balanced inputs with ducking. Provide with remote control for input selection and master level control.

Provide:

Rane CP64 w/ ZR-1 -or-
Symetrix 450 w/ contractor-supplied controller

Quantity: One (1), Y247 Sound Closet

2.8.2.3 8-Channel Microphone Mixer

Provide rack-mounted mixer with 8 microphone inputs.

Provide:

Rane MLM82 with Equivalent XLR Panel -or-
Shure SCM800 with RKC800 -or-
Intelix 8002MCB with Equivalent XLR Panel

Quantity: One (1), Y247 Sound Closet

2.8.2.4 4-Channel A/V Input Mixer

Provide 4-channel rack-mounted microphone mixer for AV input connection panels.

Provide:

Shure SCM268 -or-
ATI MX100 w/ XP100

Quantity: One (1), Y247 Sound Closet

2.8.2.5 4 x 1 Mixer

Provide 4-channel rack-mounted line mixer.

Provide:

ATI MLA400-2 -or-
Oxmoor 4X4T

Quantity: One (1), Y247 Sound Closet

2.8.2.6 2 x 6 Digital Signal Processor

Provide Digital Signal Processor with two (2) inputs and six (6) outputs capable of processing required, as required by the documents.

Provide:

Shure D4800 -or-
Rane RPM-26v -or-
White Instruments Paramedic 26

Quantity: One (1), Y247 Sound Closet

2.8.2.7 Power Amplifiers for Loudspeakers

Provide dual channel power amplifiers with balanced bridging inputs. Provide amplifiers which provide at least 200 watts output (nominal) per channel into 8 ohms.

Provide:

Crown CT-410 -or-
QSC CX302 -or-
Crest CKS400

Quantity: Three (3), Y247 Sound Closet

2.8.2.8 Audio Switching Relay

Provide relay appropriate for switching line-level audio equipment.

Connect to incoming Fire Alarm signal line as required by the documents.

Provide:

FSR LK-2 with relay track -or-
Potter & Brumfield R10-E1Y2-V700 with 27E461 socket, 24A071 mounting clip, 24A110 mounting track, and 20C259 hold-down strap -or-
Soundolier RLM-24 with RPM-Series relay module

Quantity: One (1)

2.8.2.9 Emergency Page Relay

Provide relay appropriate for connecting the control input of the 2 x 6 Digital Signal Processor to ground when the relay coil is energized. Configure such that the relay coil is energized during an Emergency Page as required by documents.

Provide:

FSR LK-2 with relay track -or-
Potter & Brumfield R10-E1Y2-V700 with 27E461 socket, 24A071 mounting clip, 24A110 mounting track, and 20C259 hold-down strap -or-
Soundolier RLM-24 with RPM-Series relay module

Quantity: One (1)

2.8.3 RACK EQUIPMENT (OPTION No. OP101)

2.8.3.1 Audio Equipment Rack

Use 25 inch deep rack with bolt-together frame, side panels, rear door, and front locking door, which accepts extra panel-mounting angles. Fill in unused rack space with blank solid or ventilating panels. Provide rack, accessories, and filler panels in smooth (not wrinkle) matte black finish.

Provide:

Middle Atlantic Assembly -or-
Raxxess Assembly -or-
Soundolier Assembly -or-
Lowell Assembly

Quantity: One (1), Y247 Sound Closet

2.8.3.2 Rack Power Wiring

Equip audio equipment rack with permanently-mounted 3-conductor isolated-ground AC power receptacles with sufficient outlets to meet system needs plus at least two (2) spares. Connected to wall-mounted power receptacles as indicated in the E series drawings.

Provide:

Soundolier SACS-5F, SACS-1F -or-
One Power CQ100A/20IG, CQ20A/IG -or-
Lowell RPC-1-IG

Quantity: As required, Y247 Sound Closet

2.8.3.3 System Power Control

Provide a relay-controlled power switching system with a master power switch and power-on indicator for the system. Connect the master power switch switch to control each receptacle in the rack except for one of the spare receptacles. Label unswitched receptacles "UNSWITCHED". Connect power for rack illumination to bypass the system master power switch. Provide a means to cycle the system power amplifiers on successively at intervals of approximately one second whenever the power switch is activated.

Provide:

Soundolier SACR-191 -or-
One Power CQ15A -or-
Lowell SCS-3

Quantity: One (1), Y247 Sound Closet

2.8.4 LOUDSPEAKER COMPONENTS (BASE BID)

2.8.4.1 Court Area Loudspeakers

Provide with hardware required for mounting in loudspeaker clusters as shown on drawing PG2.225.

Provide: EAW MK-2164 -or-
ElectroVoice Fri-122/64

Quantity: Six (6), Y240 Gymnasium

2.8.4.2 Bleachers Loudspeakers

Provide with hardware required for mounting in loudspeaker clusters as shown on drawing PG2.225.

Provide: EAW MK-2194
ElectroVoice Fri-122/9 *

Quantity: Three (3), Y240 Gymnasium

Contact ElectroVoice for custom assembly if not available in standard catalog.

2.8.5 AUDIO RECORDING AND PLAYBACK EQUIPMENT (OPTION No. OP101)

2.8.5.1 Audio Cassette/Compact Disc Player

Provide device with independent compact disc and audio cassette playback functions with balanced and unbalanced outputs.

Provide:

Marantz PMD350 with XLR350PMD Balancing Kit -or-
Denon DN-T620 -or-
Tascam CD-A700

Quantity: One (1), Y247 Sound Closet

2.8.5.2 AM/FM Tuner

Provide complete with rack-mounting equipment.

Provide:

Denon TU-1500RD -or-
Marantz ST6000P

Quantity: One (1), Y247 Sound Closet

2.8.5.3 TV Tuner

Provide and install a television tuner. Provide all cabling to RF distribution system as required by the documents. Program into tuner all active channels, coordinate with contracting officer.

Provide tuner able to receive at least 125 channels based on the Broadcast or CATV channel allocation table. Provide with a 75-ohm antenna terminal, along with video and stereo audio outputs. Provide tuner equipped with front panel controls, as well as automatic and preset tuning functions.

Provide equipment able to be controlled by the Remote Control system using RS-232, Infrared or LAN connections. Provide with complete with rack-mounting hardware.

Provide:

Sony TU-1041 -or-
Contemporary Research 232-STA -or-
Crestron ST-TUNE

Quantity: One (1), Y247 Sound Closet

2.8.6 PORTABLE EQUIPMENT RACK AND COMPONENTS (OPTION No. OP101)

2.8.6.1 Rack Mount Mixer

Provide rack-mounted mixer with at least eight (8) line/microphone inputs. Mount in portable equipment rack.

Provide:

Rane MLM82 with Equivalent XLR Panel -or-
Shure SCM800 with RKC800 -or-
Intelix 8002MCB with Equivalent XLR Panel

Quantity: One (1)

2.8.6.2 Audio Cassette/Compact Disc Player

Provide device with independent compact disc and audio cassette playback functions with balanced and unbalanced outputs. Mount in portable equipment rack.

Provide:

Marantz PMD350 with XLR350PMD Balancing Kit -or-
Denon DN-T620 -or-
Tascam CD-A700

Quantity: One (1)

2.8.6.3 Handheld Wireless Microphone System

Provide all antennas, transmitters and receivers by a single manufacturer. Provide UHF system which allows simultaneous and independent operation from existing wireless systems at the school. Mount receiver and antennae in portable equipment rack. Provide with handheld microphone system.

Provide UHF System:

Shure UC24/58 system -or-
Lightspeed UDR-800/OM3

Quantity: One (1)

2.8.6.4 Portable Equipment Rack

Provide 8 rack unit polyethylene or other plastic molded equipment rack with front and rear rack rails as well as front and rear covers with locking latches. Equip rack with permanently mounted AC power 3-conductor grounded power rated for 15 amps with receptacles for each item of equipment in the case plus at least two spare, and with a power cord at least fifteen (15) feet long. Fill in unused rack space with blank solid or ventilating panels. Provide strain relief for long power extension cable with same length as corresponding line input extension cable.

Provide:

SKB SKB-19-8U -or-
Hardigg ProRack 8U -or-
Majecal Equivalent -or-
Gafer Casses GRR-8

Quantity: One (1)

2.9 MULTI-PURPOSE ROOM #1 A/V SYSTEM (OPTION No. OP101)

Work specified under this Article shall be part of Option No. OP101, except for items specified under Paragraphs 2.9.4 and 2.9.4.

2.9.1 INPUT EQUIPMENT (OPTION No. OP101)

2.9.1.1 Announcement Microphone

Provide a cardioid microphone with switch for general sound reinforcement. Provide complete with stand adapters as necessary. Provide with flexible microphone cable.

Provide:

Shure SM58S-LC -or-
Electro-Voice N/D267 -or-
Audix OM-3 xb

Quantity: One (1)

2.9.1.2 Microphone Floor Stand

Provide an adjustable black stand with 5/8" thread and round, weighted metal base.

Provide:

AKG KM-10/1-black -or-
Atlas MS-12CE -or-
On-Stage MS9201B

Quantity: One (1)

2.9.1.3 Stereo A/V Interface

Mount receptacles in stereo pairs on input connection plates as required by the documents. Connect receptacle to transformer such that the output of the transformer is balanced and will match the inputs of the priority mike/line mixer as required by the documents.

1. Phono Receptacles: Use female phono ("RCA") panel mounted jacks, as shown below, which are insulated from the mounting panel and which use D-holes or other positive means to prevent jack rotation. Provide sufficient clearance so that inserted plugs do not short to the plate.

Provide:

H.H. Smith 1203 with 1203-1 washer -or-
Switchcraft 3511

Quantity: Six (6)

2. High Impedance to Line-Level Transformer

Provide:

Sescom MI-22 -or-
Approved Equal

Quantity: Six (6)

2.9.2 AUDIO CONTROL AND AMPLIFICATION EQUIPMENT (OPTION No. OP101)

2.9.2.1 4-Channel A/V Input Mixer

Provide rack-mounted mixer with at least four stereo balanced or unbalanced line inputs. Provide with remote control for input selection and master level control.

Provide:

Rane CP64 w/ ZR-1 -or-
Symetrix 450 w/ contractor-supplied controller

Quantity: One (1), Y327 Sound Closet

2.9.2.2 4 x 1 Mixer

Provide 4-channel rack-mounted line mixer.

Provide:

ATI MLA400-2 -or-
Oxmoor 4X4T

Quantity: One (1), Y327 Sound Closet

2.9.2.3 Feedback Supressor

Provide:

Sabine FBX-1020 -or-
Shure DFR11EQ

Quantity: One (1), Y327 Sound Closet

2.9.2.4 Paging Ducker Assembly

Provide Paging Ducker Assembly consisting of a Paging Ducker and a Voice-Activated Relay. Provide Ducker with two line-level inputs, one for the Central Paging feed and one for the local program. Provide unit that has a switch which will can be activated by voice activated relay to fade local program input when central paging signal is present and ramp the local program input back up to unity gain after completion of the page. Connect as required by the documents. Adjust for maximum fade depth and

minimum fade rate. Provide complete with 24VDC Power Supplies by same manufacturer sufficient to power all units.

Provide Paging Ducker:

RDL ST-VP1 -or-
Approved Equal

Quantity: One (1), Y327 Sound Closet

Provide Voice-Activated Relay:

RDL ST-ACR-1 -or-
Approved Equal

Quantity: One (1), Y327 Sound Closet

2.9.2.5 2 x 4 Digital Signal Processor

Provide Digital Signal Processor with two (2) inputs and four (4) outputs capable of processing required, as required by the documents.

Provide:

Shure P4800 -or-
Rane RPM-26v -or-
White Instruments Paramedic 24

Quantity: One (1), Y327 Sound Closet

2.9.2.6 Power Amplifiers for Ceiling Loudspeakers

Provide dual channel power amplifiers with balanced bridging inputs. Provide amplifiers which provide at least 150 watts output (nominal) per channel into 70.7 volts.

Provide:

Crown CT-410 -or-
QSC CX302V -or-
Crest CKV400

Quantity: One (1), Y327 Sound Closet

2.9.2.7 Power Amplifiers for Centerline Subwoofer

Provide dual channel power amplifiers with balanced bridging inputs. Provide amplifiers which provide at least 300 watts output (nominal) into 8 ohms when operated in bridged mode.

Provide:

Crown CT-210 -or-
QSC CX302 -or-

Crest CKS200

Quantity: One (1), Y327 Sound Closet

2.9.2.8 Audio Switching Relay

Provide relay appropriate for switching line-level audio equipment. Connect to incoming Fire Alarm signal line as required by the documents.

Provide:

FSR LK-2 with relay track -or-
Potter & Brumfield R10-E1Y2-V700 with 27E461 socket, 24A071 mounting clip, 24A110 mounting track, and 20C259 hold-down strap -or-
Soundolier RLM-24 with RPM-Series relay module

Quantity: One (1), Y327 Sound Closet

2.9.2.9 Emergency Page Relay

Provide relay appropriate for connecting the control input of the 2 x 4 Digital Signal Processor to ground when the relay coil is energized. Configure such that the relay coil is energized during an Emergency Page as required by documents.

Provide:

FSR LK-2 with relay track -or-
Potter & Brumfield R10-E1Y2-V700 with 27E461 socket, 24A071 mounting clip, 24A110 mounting track, and 20C259 hold-down strap -or-
Soundolier RLM-24 with RPM-Series relay module

Quantity: One (1), Y327 Sound Closet

2.9.2.10 System Power Control

Provide single space rack mounted isolated-ground power distribution device with front mounted power switch. Mount with master power switch on rear rack rails.

Provide:

Furman PL-PRO-G -or-
Approved Equal

Quantity: One (1), Y327 Sound Closet

2.9.2.11 Wall-Mounted Audio Equipment Rack

Use wall-mounted rack with removable swingable front and rear sections and lockable front door. Leave at least three (3) empty rack spaces for future expansion, and fill in unused rack space with blank solid or ventilating

panels. Provide rack, accessories, and filler panels in smooth (not wrinkle) matte black finish. Mount on wall as directed by Contracting Officer.

Provide:

Soundolier 320 Series -or-
Middle Atlantic DWR-xx-17 Series -or-
Lowell L53 Series -or-
Raxxess SWR-xx-17 series

Quantity: One (1), Y327 Sound Closet

2.9.2.12 Monitor Test Points

Provide:

HH Smith 269RB -or-
Pomona 4243-O

Quantity: Three (3), Y327 Sound Closet

2.9.3 LOUDSPEAKER COMPONENTS (BASE BID)

2.9.3.1 Ceiling Mounted Loudspeakers

Provide: Soundolier FA138T167

Quantity: Eighteen (18)

2.9.3.2 Loudspeaker Backbox

Provide: Soundolier FA97-8

Quantity: Eighteen (18)

2.9.3.3 Loudspeaker Grille

Provide: Soundolier FA51-8

Quantity: Eighteen (18)

2.9.3.4 Centerline Subwoofer

Provide subwoofer, recessed in the ceiling as required by the documents.

Provide:

JBL Control 19CS -or-
Approved Equal

Quantity: One (1)

2.9.4 VIDEO EQUIPMENT (OPTION No. OP101.1)

2.9.4.1 Videocassette Player/Recorder

Provide and install a 4-head Monaural VHS player/recorder. Provide player/recorder capable of timer controlled playback, auto daylight savings time adjustment, multi lingual support, front panel pause button and backup capability of one month. Provide equipment capable of auto-repeat playback, dual mode shuttle control, and a 181 channel TV tuner (provide all cabling to video receptacle). Provide with BNC connector outputs that include baseband video and audio. Provide with "RCA-Type" audio connectors for connection to sound system. Provide videocassette player/recorder capable of being controlled by the remote control system specified. Also provide complete with rack-mount hardware and a handheld infrared remote controller.

Provide:

Panasonic AG-1330 -or-
JVC SRTSIU -or-
Sharp VC-H810U

Quantity: One (1), Y327 Sound Closet

2.9.4.2 Infrared Repeater

Provide an infrared repeater system to control the rack mounted VCR from within the rooms. Provide unit accepting modulation frequencies from 30 to 100 KHz with Receiver reception range greater than 30 feet and reception angle exceeding 55 degrees off axis. Provide unit capable of driving cable lengths of a least 200 feet. Provide unit that can operate on low voltage, 12 - 24 VDC without interference from fluorescent lighting. Provide receiver, cabling and transmitter. Affix transmitter to the equipment under control. Coordinate placement with Contracting Officer.

Provide with power supply.

Provide:

Xantech 480-00 Dinky Link or wall mount version of same -or-
Knoll IR22 or IR21 -or-
Adcom SPM-500H or XR-500H -or-
Approved Equal

Quantity: One (1)

2.9.4.3 Video Distribution Amplifier

Provide and install a one input, six-output video distribution amplifier. Provide unit with outputs that are individually buffered and amplified. Provide unit with amplifier capable of accepting video levels from 0.5 to 2.0 Volts peak to peak, adjustable to maintain a signal level of 1.0 volts peak to peak. Provide unit with a bandwidth of at least 6 MHz. Provide amplifier, power supply and rack mount. If the rack mount accepts more amplifiers than the system requires, provide blank cover plates for the

rack mount. Adjust all video levels to 1.0 volts peak to peak.

Provide:

Extron Electronics CVDA 6 MX with rack mount -or-
Inline Inc. IN3218HR -or-
Altinex DA1706Sv -or-
Sigma VDA-26A -or-
Approved Equal

Quantity: One (1)

2.9.5 ROLL-AROUND EQUIPMENT RACK (OPTION No. OP101)

Provide roll-around equipment rack for use next to instructor.

2.9.5.1 Rack Mount Mixer

Provide rack-mounted mixer with at least eight (8) line/microphone inputs.

Provide:

Rane MLM82 with Equivalent XLR Panel -or-
Shure SCM800 with RKC800 -or-
Intelix 8002MCB with Equivalent XLRPanel

Quantity: One (1)

2.9.5.2 Dual Well Audio Cassette Recorder/Player

Provide dual well cassette deck with recording and cassette duplication capabilities. Mount in main audio equipment rack.

Provide:

Tascam 202 MkIII -or-
Marantz PMD500 -or-
Denon DN-770R

Quantity: One (1), Z342 Storage

2.9.5.3 100 Disc Compact Disc Changer

Provide device with Disc naming function and definition of music groups.

Provide:

Denon DCM-5000 -or-
Soney CDPCX300

Quantity: One (1)

2.9.5.4 Headset Wireless Microphone System

Provide all antennas, transmitters and receivers by a single manufacturer. Provide UHF system which allows simultaneous and independent operation from existing wireless systems at the school. Mount receiver and antennae in roll-around equipment rack. Provide with headset microphone system.

Provide

UHF System:
Shure UC14/16 system -or-
Lightspeed UDR-800/TK170

Quantity: Three (3)

2.9.5.5 Roll-Around Equipment Rack

Provide roll-around equipment rack to mount portable equipment. Equip rack with permanently mounted AC power 3-conductor grounded stripline rated for 15 amps, with outlets on 6" centers, extending height of rack. Provide Power on/off switch on rack panel, or on side of equipment rack as directed by contracting officer. Fill in unused rack space with blank solid or ventilating panels. Provide strain relief for long power extension cable with same length as corresponding line input extension cable. Provide complete with non-plastic castors which will not mar the floor.

Provide:

Raxxess CR-12/10 -or-
SKB 19-1010B -or-
Odyssey CXP110W

Quantity: One (1)

2.10 MEDIA PROJECTION ROOM A/V SYSTEM (OPTION No. OP101.1)

Note: Work of this Article shall be part of Option No. OP101.1, except for work specified under Paragraph 2.10.3.

2.10.1 INPUT EQUIPMENT (OPTION No. OP101.1)

2.10.1.1 Miniature Unidirectional Stand Microphones

Provide microphone with shock isolation. Supply microphones with 18" long flexible extension tube, stand clamps and foam windscreen. These microphones are intended for general use lecterns (lectern not in contract), or on stands for pick-up of speech or music at normal microphone distances, greater than 12 inches. For units without electronic vibration isolation provide additional shock-mount stand adapter.

Provide:

Countryman Isomax IV, M4HP5VS18E -or-
Countryman Associates, Inc.
417 Stanford Avenue
Redwood City, CA 94065

415/364-9988

Shure MX 418/S w/ microphone stand shock-mount adapter

Quantity: Two (2)

2.10.1.2 Microphone Stand Clamp

Provide a tiltable mount with 5/8"-27 thread for the miniature unidirectional stand microphone.

Provide:

Electro-Voice 311 -or-
Countryman A3CSTAND

Quantity: Two (2)

2.10.1.3 Microphone Floor Stand

Provide an adjustable black stand with 5/8" thread and round, weighted metal base.

Provide:

AKG KM-10/1-black -or-
Atlas MS-12CE -or-
On-Stage MS9201B

Quantity: Two (2)

2.10.1.4 Lavalier Wireless Microphone System

Provide all antennas, transmitters and receivers by a single manufacturer. Provide UHF system which allows simultaneous and independent operation from other wireless systems at the school. Connect to passive antenna splitter and 1/2 wave antenna system. Provide complete with rack-mounting kit. Provide with lavaliere/bodypack transmitter system.

Provide:

Shure UC14/93 system -or-
Lightspeed UDR-800/MKE2 -or-
Approved Equal

Quantity: Two (2)

2.10.1.5 Wireless Antenna Splitter and Antenna

Provide all antennas, transmitters and receivers by a single manufacturer. Provide UHF system which allows simultaneous and independent operation from other wireless systems at the school. Connect to passive antenna splitter and 1/2 wave antenna system. Provide complete with rack-mounting kit. Provide with lavaliere/bodypack transmitter system.

Provide:

Shure UA-220 passive antenna splitter with two (2) UA-500 ½ wave antennas -or-
Lightspeed equivalent -or-
Approved Equal

Quantity: One (1)

2.10.1.6 Podium Floorbox

Provide floorbox for mounting devices use to connect touch-screen control panel and interface with computer A/V outputs.

Provide:

FSR FL-600-LPB -or-
Approved Equal

Quantity: One (1)

2.10.2 AUDIO CONTROL AND AMPLIFICATION EQUIPMENT (OPTION No. OP101.1)

2.10.2.1 Automatic Microphone Mixer

Provide rack-mounted automatic mixer with 8 balanced microphone inputs.

Provide:

Shure SCM-810 -or-
Intelix 8001AMIX

Quantity: One (1), Z342 Storage

2.10.2.2 Buffer/Distribution Amplifier

Provide buffer/distribution amplifier for mixing of line level sources. Mount in main audio equipment rack. Distribute Audio with mixes as required by the documents.

Provide:

Oxmoor 4x4 -or-
Rane SRM66

Quantity: One (1), Z342 Storage

2.10.2.3 1/3-Octave Equalizer

Provide single channel, one third-octave graphic equalizer. Mount in audio equipment rack. Provide complete with security cover

Provide:

Rane GE30 with SC 3.5 security cover -or-
Klark - Teknik DN300B with SC P 2u security cover -or-
Symetrix 532E with USC-2 security cover

Quantity: One (1), Z342 Storage

2.10.2.4 Compressor/Limiter

Adjust to limit at 3dB below power amplifier rated full output. Set the compression ratio to 2:1 and adjust compression threshold for 3dB compression at limiting threshold. Provide complete with security cover.

Provide:

Symetrix 501 (single channel) -or-
Rane DC24 (dual channel) -or-
DBX 1066A (Dual Channel)

Quantity: One (1), Z342 Storage

2.10.2.5 Feedback Supressor

Provide:

Sabine FBX-1020 -or-
ShureDFR11EQ

Quantity: One (1), Z342 Storage

2.10.2.6 Paging Ducker Assembly

Provide Paging Ducker Assembly consisting of a Paging Ducker and a Voice-Activated Relay. Provide Ducker with two line-level inputs, one for the Central Paging feed and one for the local program. Provide unit that has a switch which will can be activated by voice activated relay to fade local program input when central paging signal is present and ramp the local program input back up to unity gain after completion of the page. Connect as required by the documents. Adjust for maximum fade depth and minimum fade rate. Provide complete with 24VDC Power Supplies by same manufacturer sufficient to power all units.

Provide Paging Ducker:

RDL ST-VP1 -or-
Approved Equal

Quantity: One (1), Z342 Storage

Provide Voice-Activated Relay:

RDL ST-ACR-1 -or-
Approved Equal

Quantity: One (1), Z342 Storage

2.10.2.7 Power Amplifiers for Loudspeakers

Provide dual channel power amplifiers with balanced bridging inputs. Provide amplifiers which provide at least 100 watts output (nominal) per channel into 70.7 volts.

Provide:

Crown CT-210 -or-
QSC CX302V -or-
Crest CKV200

Quantity: One (1), Z342 Storage

2.10.2.8 Audio Switching Relays

Provide relay appropriate for switching line-level audio equipment. Connect one (1) to incoming Emergency Page signal line and one (1) to incoming Fire Alarm signal line as required by the documents.

Provide:

FSR LK-2 with relay track -or-
Potter & Brumfield R10-E1Y2-V700 with 27E461 socket, 24A071 mounting clip, 24A110 mounting track, and 20C259 hold-down strap -or-
Soundolier RLM-24 with RPM-Series relay module

Quantity: Two (2), Z342 Storage

2.10.2.9 Audio Equipment Rack

Use 25 inch deep rack with bolt-together frame, side panels, rear door, and front locking door, which accepts extra panel-mounting angles. Fill in unused rack space with blank solid or ventilating panels. Provide rack, accessories, and filler panels in smooth (not wrinkle) matte black finish.

Provide:

Middle Atlantic Assembly -or-
Raxxess Assembly -or-
Soundolier Assembly -or-
Lowell Assembly

Quantity: One (1), Z342 Storage

2.10.2.10 Rack Power Wiring

Equip audio equipment rack with permanently-mounted 3-conductor isolated-ground AC power receptacles with sufficient outlets to meet system needs plus at least two (2) spares. Connected to wall-mounted power receptacles as indicated in the E series drawings.

Provide:

Soundolier SACS-5F, SACS-1F -or-
One Power CQ100A/20IG, CQ20A/IG -or-
Lowell RPC-1-IG

Quantity: As required, Z342 Storage

2.10.2.11 System Power Control

Provide a relay-controlled power switching system with a master power switch and power-on indicator for the system. Connect the master power switch switch to control each receptacle in the rack except for one of the spare receptacles. Label unswitched receptacles "UNSWITCHED". Connect power for rack illumination to bypass the system master power switch. Provide a means to cycle the system power amplifiers on successively at intervals of approximately one second whenever the power switch is activated.

Provide:

Soundolier SACR-191 -or-
One Power CQ15A -or-
Lowell SCS-3

Quantity: One (1), Z342 Storage

2.10.2.12 Monitor Test Points

Provide:

HH Smith 269RB -or-
Pomona 4243-O

Quantity: Two (2), Z342 Storage

2.10.3 LOUDSPEAKER COMPONENTS (BASE BID)

2.10.3.1 Ceiling Mounted Loudspeakers

Provide: Soundolier FA116T72

Quantity: Sixteen (16)

2.10.3.2 Ceiling Loudspeaker Backbox and Grille, Recessed

Provide: Soundolier FA97-6 Enclosure with FA51-6 Grille

Quantity: Sixteen (16)

2.10.4 AUDIO RECORDING AND PLAYBACK EQUIPMENT (OPTION No. OP101.1)

2.10.4.1 5-Disc Compact Disc Player

Provide a 5-disc carousel type compact disc changer. Mount in main audio equipment rack.

Provide:

Denon DCM-360P -or-
Tascam CD-305 -or-
Marrantz PMD320

Quantity: One (1), Z342 Storage

2.10.4.2 Dual Well Audio Cassette Recorder/Player

Provide dual well cassette deck with recording and cassette duplication capabilities. Mount in main audio equipment rack.

Provide:

Tascam 202 MkIII -or-
Marantz PMD500 -or-
Denon DN-770R

Quantity: One (1), Z342 Storage

2.10.4.3 Recording Output Receptacles

Provide phono jacks and transformer as shown on drawings to step-down low-impedance line level output and match them to inputs of consumer-type ("Hi-Fi") recording equipment. Provide three-pin receptacles to interface "pro-level" recording equipment to same low-impedance line level output. Locate on custom fabricated connection plates as required by the documents.

1. Phono Receptacles: Use female phono ("RCA") panel mounted jacks, as shown below, which are insulated from the mounting panel and which use D-holes or other positive means to prevent jack rotation. Provide sufficient clearance so that inserted plugs do not short to the plate.

Provide

H.H. Smith 1203 with 1203-1 washer -or-
Switchcraft 3511

Quantity: One (1)

2. Three-pin Receptacles: Provide three-pin receptacle with black finish, for connection to "pro-level" equipment.

Provide:

Switchcraft D3MB -or-
Neutrik NC3MPB

Quantity: One (1)

3. Low-Impedance to High-Impedance Transformer: Mount at signal output jacks as shown to match system line level output to phono jacks.

Provide:

SESCOM MI-96 -or-
Approved Equal

Quantity: One (1)

2.10.4.4 600 ohm 1:1 Impedance Ratio Transformer:

Connect to recording output receptacles as required by the documents.

Provide:

Altec 15356 -or-
Sescom MI-18 -or-
Sescom MI-100
Triad A67J

Quantity: One (1)

2.10.5 HEARING ASSISTANCE SYSTEM (OPTION No. OP101.1)

Provide a system consisting of an FM transmitter mounted within the equipment rack in Storage Z342, an antenna mounted vertically, on outside of equipment rack, and portable battery-operated receivers with earphones and inductive couplers (the latter for use with hearing aids with "T" switches). Operate on frequency free from interference with any other FM system in the area.

2.10.5.1 Transmitter

Provide:

Williams PPA T4 with ANT 005 antenna and RPK 003 rack mounting kit. -or-
Phonic Ear PE550T transmitter with AT 564 or AT 565 antenna as required by frequency and AT575 rack mounting kit
-or-
Telex ST200 transmitter with HGA-1 antenna and RMS rack mounting kit

Quantity: One (1), Z342 Storage

2.10.5.2 Receiver with Wide Range Over-Ear Earphone

Provide:

Williams PPA R7 with EAR 008 or equivalent -or-
Phonic Ear PE 300R with Williams EAR 008 or equivalent -or-
Telex SR-50 with Williams EAR 008 or equivalent

Quantity: Five (5)

2.10.5.3 Neckloop Induction Coil

Provide:

Williams NKL 001 -or-
Phonic Ear AT-543-16-S -or-
Telex NL-4S

Quantity: Two (2)

2.10.5.4 600 ohm 1:1 Impedance Ratio Transformer:

Connect to hearing assistance transmitter.

Provide:

Altec 15356 -or-
Sescom MI-18 -or-
Sescom MI-100
Triad A67J

Quantity: One (1)

2.10.6 VIDEO EQUIPMENT (OPTION No. OP101.1)

2.10.6.1 Audio/Video Switcher System Switch

Provide switcher capable of switching RGBHV computer signals, composite video signals, s-video signals and stereo audio. Provide unit with a video bandwidth of 300 MHz or better that can switch video sources in the vertical interval without rolling or deterioration of the picture when switching from one input to another.

Provide unit with at least eight inputs, each configurable to switch RGBHV, composite video or s-video (Y/C) signals through either software or switch selections.

Provide unit capable of controlling the Projector specified herein. Provide unit with front panel push buttons for input selection, projector control and video image muting. Provide unit with an RS-232 control port with protocols to allow the Remote Control System specified herein to operate the switcher.

Provide unit complete with rack mount and all required cabling and software.

Provide:

Extron Electronics System 8 Plus Switcher -or-
Inline Inc. IN3808 -or-
Approved Equal

Quantity: One (1)

2.10.6.2 Computer Video Interface - Wall Mounted

Provide and install a two-gang wall mounted computer interface, compatible with computer video signals from 15 - 150 KHz, including VGA, SVGA, XGA, XGA-2, Macintosh, Sun and SGI. Provide interface with a bandwidth of 300 MHz, capable of accepting video signals from desktop or laptop computers. Provide interface with unbalanced audio inputs for connection to audio signals from the computer, Provide interface with balanced outputs for transmission to the Switcher specified herein.

Provide interface with level controls and peaking adjustments to compensate for cable length, capable of driving a video signal up to 200 feet without signal loss. Provide interface with a 75-ohm termination switch that will allow computer connection when a local monitor is not connected.

Provide with power supply. Provide with cables to connect a laptop computer and to connect a desktop computer. Coordinate computer cable selection with Owner. Coordinate interface plate color with Contracting Officer.

Provide:

Extron Electronics RGB-406 with power supply and cables -or-
Inline Inc. IN 2114 with power supply and cables -or-
Approved Equal

Quantity: One (1)

2.10.6.3 Computer Video Interface - Lectern Mounted

Provide and install a furniture-mounted computer interface, compatible with computer video signals from 15 - 150 KHz, including VGA, SVGA, XGA, XGA-2, Macintosh, Sun and SGI. Provide interface with a bandwidth of 300 MHz, capable of accepting video signals from desktop or laptop computers. Provide interface with unbalanced audio inputs for connection to audio signals from the computer, Provide interface with balanced outputs for transmission to the Switcher specified herein.

Provide interface with level controls and peaking adjustments to compensate for cable length, capable of driving a video signal up to 200 feet without signal loss. Provide interface with a 75-ohm termination switch that will allow computer connection when a local monitor is not connected.

Provide with power supply. Provide with cables to connect a laptop computer and to connect a desktop computer. Coordinate computer cable selection with Owner. Provide with mounts as applicable to attach to lectern.

Provide:

Extron Electronics RGB-440 with power supply, cables and brackets as required -or-
Inline Inc. IN 2116 with power supply, cables and brackets as required -or-

Altinex VA6850WM with power supply, cables and brackets as required -or-
Approved Equal

Quantity: One (1)

2.10.6.4 Projection Screen

Provide and install projection screens at the locations and sizes shown on the plans. Provide screen with a matte white viewing surface with a half axis gain of 1.3. Provide screen with black masking borders for the screen material standard on flame retardant and mildew resistant fabric. Provide screen with the fabric mounted on a metal roller mounted in vibration and noise absorbing supports. Provide screen with a tab guide system at each side of the fabric to maintain even lateral tension and to hold surface flat. Form the bottom of the fabric into a pocket holding a 3/8" diameter metal rod and insert into an aluminum slat.

Mount the motor in the roller with a three-wire quick reversal type capacitor and electric brake to prevent coasting. Provide motor with adjustable limit switches to automatically stop the picture surface in the up and down positions.

Provide case formed of 22-gauge steel with a flat back to prevent scraping of fabric. Provide powder coated case finished in black enamel. Provide case with end caps that do not allow the end of the roller to be exposed. Provide case with caps forming study brackets for wall or ceiling installation.

Provide screens complete with LOW VOLTAGE wall switch with box and cover plate.

Provide screen that is UL and CSA listed.

Provide:

Da-Lite Screen Company, Tensioned Cosmopolitan Electrol -or-
Draper Shade and Screen Company Premier -or-
Stewart Filmscreen Company Luxus Model A -or-
Approved Equal

Quantity: One (1)

2.10.6.5 Video Cassette Player/Recorder

Provide and install a 4-head Monaural VHS player/recorder. Provide player/recorder capable of timer controlled playback, auto daylight savings time adjustment, multi lingual support, front panel pause button and backup capability of one month. Provide equipment capable of auto-repeat playback, dual mode shuttle control, and a 181 channel TV tuner (provide all cabling to RF System). Provide with BNC connector outputs that include baseband video and audio. Provide videocassette player/recorder capable of being controlled by the remote control system specified. Provide complete with rack mounting hardware.

Provide:

Panasonic AG-1330 -or-
JVC SRTSIU -or-
Sharp VC-H810U -or-
Approved Equal

Quantity: One (1)

2.10.6.6 Video Distribution Amplifier

Provide and install a one input, six-output video distribution amplifier. Provide unit with outputs that are individually buffered and amplified. Provide unit with amplifier capable of accepting video levels from 0.5 to 2.0 Volts peak to peak, adjustable to maintain a signal level of 1.0 volts peak to peak. Provide unit with a bandwidth of at least 6 MHz. Provide amplifier, power supply and rack mount. If the rack mount accepts more amplifiers than the system requires, provide blank cover plates for the rack mount. Adjust all video levels to 1.0 volts peak to peak.

Provide:

Extron Electronics CVDA 6 MX with rack mount -or-
Inline Inc. IN3218HR -or-
Altinex DA1706Sv -or-
Sigma VDA-26A -or-
Approved Equal

Quantity: One (1)

2.10.6.7 Video Projector

Provide and install video projectors as shown on the drawings. Provide projectors with a minimum native resolution of 1024 x 768 that can accept and scale all video and computer resolutions up to 1280 x 1024. Provide unit with minimum brightness of 2000 ANSI lumens and a contrast ratio of 300:1 or better. Provide unit with a Polysilicon liquid crystal display for projector-imaging device equipped with a zoom lens, and internal keystone correction.

Furnish a hand-held remote control with the projector that is able to control all functions. If possible, provide a remote control that is a universal device capable of controlling the VCR's specified herein.

Provide a projector with RGBHV computer inputs as well as video and s-video inputs

For projectors with fixed ceiling mounts, provide a complete ceiling mounting system. Coordinate the projector lift specified herein with the projector. Prior to procuring the projector, arrange with the Contracting Officer a demonstration of the projector for subjective image quality.

Provide:

NEC MT-1045 -or-
Sanyo PLC-XP18N -or-
Sony VPL-PX30 -or-
Approved Equal

Quantity: One (1)

2.10.6.8 Video Projector Lift

Provide and install a video projector lift for the projector furnished under this contract. Provide lift with the capacity to raise and lower the projector from the ceiling at three different positions: fully retracted into ceiling, show position, and servicing position. For the servicing position lower the projector to approximately four feet above the floor.

Provide lift with a low voltage control and switch capable of breaking both sides of the AC line to motor. Provide and install security key switch for an authorized person to lower the lift to the floor.

Provide a lift such that the show position can be adjusted anywhere from the top limit to the lower limit of the lift with an accuracy of +/- 1/8". Provide the a protective circuit so only one direction can be activated at any time with the other direction locked out if an additional command is sent from an external source.

Provide lift formed of all steel construction except for the nylon drum lock pawl. Provide with a motor that is UL approved and with a magnetic brake. For safety, provide No. 40 steel chain for the drive to the lifting drum. Provide unit with the output sprocket welded directly to the cable drum. Do not provide keyways. Provide unit with a cable drum that is equipped with a fail safe drum lock that keeps the drum locked in all mode of operation uses a low voltage solenoid to release on the down command with a nylon pawl that can override and turn the motor off in case the drum exceeds the speed of the gear motor.

Provide the projector lift, ceiling closure and plenum shroud if a return air plenum will be present.

Provide:

SVS Inc. Mini 4 Series -or-
Display Devices Inc. LCD-100 Series -or-
Chief Manufacturing Inc, Magna LCD-DLP Series -or-
Approved Equal

Quantity: One (1)

2.10.6.9 TV Tuner

Provide and install a television tuner. Provide all cabling to RF distribution system as required by the documents. Program into tuner all active channels, coordinate with contracting officer.
Provide tuner able to receive at least 125 channels based on the Broadcast

or CATV channel allocation table. Provide with a 75-ohm antenna terminal, along with video and stereo audio outputs. Provide tuner equipped with front panel controls, as well as automatic and preset tuning functions. Provide equipment able to be controlled by the Remote Control system using RS-232, Infrared or LAN connections. Provide with complete with rack-mounting hardware.

Provide:

Sony TU-1041 -or-
Contemporary Research 232-STA -or-
Crestron ST-TUNE

Quantity: One (1), Z342 Storage

2.10.7 REMOTE CONTROL SYSTEM (OPTION No. OP101.1)

2.10.7.1 Remote Control System

Provide a Remote Control System utilizing a real time, event driven, multi-tasking, multi-threaded operating system with a distributed processing architecture. Provide system that supports internal high-speed data communications.

Provide system main frame with a 2 line by 40-character front panel LCD communication center that displays the following information without the use of a computer:

1. View control program (name, date, creator).
2. Manually control any function (I/O, relays, etc).
3. Report network devices.
4. Report error messages.
5. User definable functions - program LCD menu with dealer name, telephone number, control functions (use like a touch panel).

Provide system with front panel LED display panel for status indication of every port and card slot.

Provide system with a Network Analyzer to continuously monitor the integrity of the network for wiring faults, marginal communication performance, and network errors.

Incorporate an integrated card cage in the system to support any mix of control cards for IR, RS-232/422/485, relay, digital I/O, analog input, volume, MIDI.

Provide an internal 75W 110/220V 24VDC power supply.

Provide front and rear programming ports.

Provide a system that supports RS-485 token passing local area network (LAN) with data communication for a minimum distance of 5000 feet and for a minimum of 253 LAN devices simultaneously.

Provide a system that supports object-oriented logic based programming language and a C-like language programming language such that both programming types can run simultaneously and integral to each other.

Provide Windows-based graphical programming software, supplied by control system manufacturer, for drag and drop object oriented programming for the control system operation. Ensure that this software is self-documenting in that it generates a symbolic flow diagram printout from the system program.

Provide Control System with the following basic hardware specifications:

1. Eight IR/serial/1-way RS-232 ports
2. Eight digital/analog I/O ports - TTL In/Out and analog inputs 0-10V.
3. Eight isolated low-voltage relays - 30VDC @1A.
4. Six 2-way RS-232/422/485 ports
5. Three control card expansion slots.
6. Network interface.
7. Front and rear programming ports.
8. 19" rack mount or shelf mounted chassis (removable rack ears).

Provide control system that supports a variety of wireless communication modes, including one-way radio frequency and infrared transmission.

Provide control system that does not require internal switch settings, jumpers, or adjustments. Provide circuit boards and modules that are directly replaceable without the need for pre-placement setup. Define and set hardware parameters by software parameters in the system program. Do not provide circuit boards and modules requiring switch settings, jumper settings, or adjustments.

For control systems based on "plug-in" type card modules (card cage) do not interface from the controlled equipment (such as VCRs, projectors, monitors, projection screens, etc.) to the control system by passing interface signals via the same "motherboard" as the control system address, data, and select lines. Provide interface connections to control modules, independent of the motherboard as to prevent noise and transient interference from external sources.

Clearly label user connections to the control system as to function (relay, analog, volume controls, etc.), as well as information on connections such as +, -, and G. Do not label with an array of numbers or letters that do not convey specific information.

Provide control system that supports expansion enclosures or card cages, which may be located anywhere on the system network.

Provide control system Manufacturer capable of providing slide projector, motor control, power control, light dimming, RS-232, infrared, pan/tilt, camera lens, analog inputs, digital inputs, and digital output interfaces that operate directly from the network.

Provide control system using centralized software. Store information required to interface with the controlled equipment in the control system's

central processing computer and downloaded to the appropriate control hardware. Do not provide control systems requiring EPROM changes or special factory programming.

Provide programming diagnostic software, supplied by the control system Manufacturer, that indicates the program flow in real time as the system is being operated. This software shall permit the isolation of specific program events for analysis.

Provide end-user software, supplied by the control system Manufacturer, based on menus and windows, which permit programming and editing of multiple real-time sequences. Provide a control system that includes a virtual tape recorder, which stores system functions in non-volatile memory and automatically records sequences of functions as they occur which may be played back causing functions to be activated in the same time sequence as they occurred. Provide the capability to edit sequences in non-real time and then play them back.

Provide end-user software, supplied by the control system Manufacturer, for event scheduling such that functions or sequences of functions may be programmed to occur based on calendar dates, weekly, or monthly cycles.

Provide control system that includes indicators, which signify system errors, power supply failure, and overload.

Provide a control system with three-year parts and labor Manufacturer warranty.

Provide:

Crestron CNMSX-PRO with 10.5" Active Matrix touch panels -or-
PANJA AX-S System with 10.5" Active Matrix touch panels -or-
Approved Equal

Quantity: One (1)

2.11 GYMNASIUM Y440 SOUND SYSTEM (OPTION No. OP101)

Note: Work specified under this Article shall be part of Option No. OP101, except for work specified under Paragraph 2.11.4)

2.11.1 INPUT EQUIPMENT (OPTION No. OP101)

2.11.1.1 Push to Talk Microphone

Provide push to talk microphone at wall mounted equipment rack for local announcements. Provide with 18-inch gooseneck and flange. Mount flange on rackmount panel.

Provide: Shure 515SBG-12XF

Quantity: One (1), Y443 Sound Closet

2.11.1.2 Announcement Microphone

Provide a cardioid microphone with switch for sound reinforcement at events. Provide complete with stand adapters as necessary. Provide with flexible microphone cable.

Provide:

Shure SM58S-LC -or-
Electro-Voice N/D267 -or-
Audix OM-3 xb

Quantity: Two (2), Y440 Gymnasium

2.11.1.3 Microphone Floor Stand

Provide an adjustable black stand with 5/8" thread and round, weighted metal base.

Provide:

AKG KM-10/1-black -or-
Atlas MS-12CE -or-
On-Stage MS9201B

Quantity: Two (2), Y440 Gymnasium

2.11.1.4 A/V Interface Panel

Provide jacks, transformer and switch assembly to combine inputs from consumer-type ("Hi-Fi") playback equipment and match them to balanced microphone level inputs.

Provide: Pro CO AVP-1

Quantity:

Three (3), Y440 Gymnasium
One (1), Y443 Sound Closet

2.11.1.5 Floor Box Assembly

Provide floor box with brass finish complete with backbox. Mount floor box flush with finished floor. Provide for wiring of components as required by the documents.

Provide: Mystery Electronics FMCA 3300 w/ BB3000D

Quantity: Four (4), Y440 Gymnasium

2.11.2 AUDIO PROCESSING AND RACKMOUNT EQUIPMENT (OPTION No. OP101)

2.11.2.1 Passive Audio Combiner

Provide passive audio combiner for line input connections.

Provide: RDL STD-600

Quantity: Two (2), Y443 Sound Closet

2.11.2.2 Priority Mic/Line Mixer

Provide rack-mounted mixer with at least four stereo balanced or unbalanced line inputs and two mono microphone/line-level balanced inputs with ducking. Provide with remote control for input selection and master level control.

Provide:

Rane CP64 w/ ZR-1 -or-
Symetrix 450 w/ contractor-supplied controller

Quantity: One (1), Y443 Sound Closet

2.11.2.3 8-Channel Microphone Mixer

Provide rack-mounted mixer with 8 microphone inputs.

Provide:

Rane MLM82 with Equivalent XLR Panel -or-
Shure SCM800 with RKC800 -or-
Intelix 8002MCB with Equivalent XLR Panel

Quantity: One (1), Y443 Sound Closet

2.11.2.4 4-Channel A/V Input Mixer

Provide 4-channel rack-mounted microphone mixer for AV input connection panels.

Provide:

Shure SCM268 -or-
ATI MX100 w/ XP100

Quantity: One (1), Y443 Sound Closet

2.11.2.5 4 x 1 Mixer

Provide 4-channel rack-mounted line mixer.

Provide:

ATI MLA400-2 -or-
Oxmoor 4X4T

Quantity: One (1), Y443 Sound Closet

2.11.2.6 2 x 6 Digital Signal Processor

Provide Digital Signal Processor with two (2) inputs and six (6) outputs capable of processing required, as required by the documents.

Provide:

Shure P4800 -or-
Rane RPM-26v -or-
White Instruments Paramedic 26

Quantity: One (1), Y443 Sound Closet

2.11.2.7 Power Amplifiers for Loudspeakers

Provide dual channel power amplifiers with balanced bridging inputs. Provide amplifiers which provide at least 200 watts output (nominal) per channel into 8 ohms.

Provide:

Crown CT-410 -or-
QSC CX302 -or-
Crest CKS400

Quantity: Three (3), Y443 Sound Closet

2.11.2.8 Audio Switching Relay

Provide relay appropriate for switching line-level audio equipment. Connect to incoming Fire Alarm signal line as required by the documents.

Provide:

FSR LK-2 with relay track -or-
Potter & Brumfield R10-E1Y2-V700 with 27E461 socket, 24A071 mounting clip, 24A110 mounting track, and 20C259 hold-down strap -or-
Soundolier RLM-24 with RPM-Series relay module

Quantity: One (1)

2.11.2.9 Emergency Page Relay

Provide relay appropriate for connecting the control input of the 2 x 6 Digital Signal Processor to ground when the relay coil is energized. Configure such that the relay coil is energized during an Emergency Page as required by documents.

Provide:

FSR LK-2 with relay track -or-
Potter & Brumfield R10-E1Y2-V700 with 27E461 socket, 24A071 mounting clip, 24A110 mounting track, and 20C259 hold-down

strap -or-
Soundolier RLM-24 with RPM-Series relay module

Quantity: One (1)

2.11.3 RACK EQUIPMENT (OPTION No. OP101)

2.11.3.1 Audio Equipment Rack

Use 25 inch deep rack with bolt-together frame, side panels, rear door, and front locking door, which accepts extra panel-mounting angles. Fill in unused rack space with blank solid or ventilating panels. Provide rack, accessories, and filler panels in smooth (not wrinkle) matte black finish.

Provide:

Middle Atlantic Assembly -or-
Raxxess Assembly -or-
Soundolier Assembly -or-
Lowell Assembly

Quantity: One (1), Y443 Sound Closet

2.11.3.2 Rack Power Wiring

Equip audio equipment rack with permanently-mounted 3-conductor isolated-ground AC power receptacles with sufficient outlets to meet system needs plus at least two (2) spares. Connected to wall-mounted power receptacles as indicated in the E series drawings.

Provide:

Soundolier SACS-5F, SACS-1F -or-
One Power CQ100A/20IG, CQ20A/IG -or-
Lowell RPC-1-IG

Quantity: As required, Y443 Sound Closet

2.11.3.3 System Power Control

Provide a relay-controlled power switching system with a master power switch and power-on indicator for the system. Connect the master power switch switch to control each receptacle in the rack except for one of the spare receptacles. Label unswitched receptacles "UNSWITCHED". Connect power for rack illumination to bypass the system master power switch. Provide a means to cycle the system power amplifiers on successively at intervals of approximately one second whenever the power switch is activated.

Provide:

Soundolier SACR-191 -or-
One Power CQ15A -or-
Lowell SCS-3

Quantity: One (1), Y443 Sound Closet

2.11.4 LOUDSPEAKER COMPONENTS (BASE BID)

2.11.4.1 Court Area Loudspeakers

Provide with hardware required for mounting in loudspeaker clusters as shown on drawing PG2.242.

Provide: EAW MK-2164 -or-
ElectroVoice Fri-122/64

Quantity: Six (6), Y440 Gymnasium

2.11.4.2 Bleachers Loudspeakers

Provide with hardware required for mounting in loudspeaker clusters as shown on drawing PG2.242.

Provide: EAW MK-2194 -or-
ElectroVoice Fri-122/9 *

Quantity: Three (3), Y440 Gymnasium

Contact ElectroVoice for custom assembly if not available in standard catalog.

2.11.5 AUDIO RECORDING AND PLAYBACK EQUIPMENT (OPTION No. OP101)

2.11.5.1 Audio Cassette/Compact Disc Player

Provide device with independent compact disc and audio cassette playback functions with balanced and unbalanced outputs.

Provide:

Marantz PMD350 with XLR350PMD Balancing Kit -or-
Denon DN-T620 -or-
Tascam CD-A700

Quantity: One (1), Y443 Sound Closet

2.11.5.2 AM/FM Tuner

Provide complete with rack-mounting equipment.

Provide:

Denon TU-1500RD -or-
Marantz ST6000P

Quantity: One (1), Y443 Sound Closet

2.11.5.3 TV Tuner

Provide and install a television tuner. Provide all cabling to RF distribution system as required by the documents. Program into tuner all active channels, coordinate with contracting officer.

Provide tuner able to receive at least 125 channels based on the Broadcast or CATV channel allocation table. Provide with a 75-ohm antenna terminal, along with video and stereo audio outputs. Provide tuner equipped with front panel controls, as well as automatic and preset tuning functions.

Provide equipment able to be controlled by the Remote Control system using RS-232, Infrared or LAN connections. Provide with complete with rack-mounting hardware.

Provide:

Sony TU-1041 -or-
Contemporary Research 232-STA -or-
Crestron ST-TUNE

Quantity: One (1), Y443 Sound Closet

2.11.6 PORTABLE EQUIPMENT RACK AND COMPONENTS (OPTION No. OP101)

2.11.6.1 Rack Mount Mixer

Provide rack-mounted mixer with at least eight (8) line/microphone inputs. Mount in portable equipment rack.

Provide:

Rane MLM82 with Equivalent XLR Panel -or-
Shure SCM800 with RKC800 -or-
Intelix 8002MCB with Equivalent XLR Panel

Quantity: One (1)

2.11.6.2 Audio Cassette/Compact Disc Player

Provide device with independent compact disc and audio cassette playback functions with balanced and unbalanced outputs. Mount in portable equipment rack.

Provide:

Marantz PMD350 with XLR350PMD Balancing Kit -or-
Denon DN-T620 -or-
Tascam CD-A700

Quantity: One (1)

2.11.6.3 Handheld Wireless Microphone System

Provide all antennas, transmitters and receivers by a single manufacturer. Provide UHF system which allows simultaneous and independent operation from existing wireless systems at the school. Mount receiver and antennae in portable equipment rack. Provide with handheld microphone system.

Provide UHF System:

Shure UC24/58 system -or-
Lightspeed UDR-800/757

Quantity: One (1)

2.11.6.4 Portable Equipment Rack

Provide 8 rack unit polyethylene or other plastic molded equipment rack with front and rear rack rails as well as front and rear covers with locking latches. Equip rack with permanently mounted AC power 3-conductor grounded power rated for 15 amps with receptacles for each item of equipment in the case plus at least two spare, and with a power cord at least fifteen (15) feet long. Fill in unused rack space with blank solid or ventilating panels. Provide strain relief for long power extension cable with same length as corresponding line input extension cable.

Provide:

SKB SKB-19-8U -or-
Hardigg ProRack 8U -or-
Magical Equivalent -or-
Gator Cases GRR-8

Quantity: One (1)

2.12 FM RF DISTRIBUTION SYSTEM (BASE BID)

Provide FM RF distribution system which provides high quality FM RF signals for use in locations as required by the documents. Provide a system consisting of a FM receive antenna, an antenna preamplifier, a FM band pass filter, a FM strip amplifier and a splitter network for distribution to the designated equipment racks.

Provide a system capable of the major New York City stations as well as local area FM stations. Provide system with RF levels to each user not less than -10 dBmV on the stronger stations and no less than -25 dBmV on the weakest stations.

RF signal leakage shall not exceed Federal Communications Commission (FCC) requirements for Cable TV Systems part 76.605(a)(12).
Out of band signals shall be below -35dBmV.

2.12.1 RF Drop Cable

Where non-plenum rated cabling is required:

Provide CATV-11 type bonded shield quad (super)-shield construction.

Provide cable of RG 11/u Type consisting of an 14 gauge (nominal 0.064 inch) copper covered steel center conductor; foamed polyethylene dielectric; inner shield aluminum-polypropylene-aluminum (PA) laminated tape with overlap bonded to dielectric. Provide cable with second shield of 34 AWG bare aluminum braid wire 60% coverage; third shield of APA non bonded tape; fourth shield of 34 AWG bare aluminum braid wire 40% coverage; jacket of black flame retardant polyvinylchloride. Provide cable which meets NEC Article 820 V Rating. Provide cable with nominal outside diameter of 0.405 inch. Provide cable with 75 ohms nominal impedance and nominal velocity of propagation shall be 85%. Provide cable with attenuation characteristics as follows:

Frequency MH	Attenuation dB/100'
5	0.38
55	0.96
83	1.18
211	1.90
400	2.60
500	2.90
600	3.18
750	3.65

Provide:

CommScope (General Instrument) F11SSVV -or-
Trilogy Communications Inc. 1159V -or-
Times Cable 2262

2.12.2 RF Coaxial Cable Male "F" Connectors

Provide and install male coaxial cable "F" connectors. Provide connectors which meet Society of Cable Television Engineers (SCTE) specifications for "F" type connectors for CATV 11 type coaxial cable. Provide connectors from approved manufacturers with model number chosen to match the selected coaxial cable. Where plenum rated cable is required use plenum rated connectors.

Provide connectors as manufactured by:

Gilbert -or-
Amphenol -or-
Pico MaCom

2.12.3 Six 6 Element FM Antenna

Provide and install a FM antenna as required by the documents . Provide a six-element yagi type antenna fabricated from 6063 aluminum tubing. Provide weather-sealed ends of the elements and boom. Provide antenna construction capable of withstanding an operational/survival wind velocity of 125 miles per hour minimum. Provide antenna with wind resistance characteristics as follows:

1. Without ice: less than 50 pounds at a wind velocity of 100 miles per hour.
2. With 0.5 inch of ice: less than 68.5 pounds at a wind velocity of 100 miles per hour.

Provide antenna with forward gain of 9dBi; Horizontal beam width of 65 degrees or better; Vertical beam width of 70 degrees or better and the front to back ratio of at least 17.0.

Provide a weather-sealed, female, "F" RF connector with an output impedance of 75 ohms.

Provide a maximum VSWR at the output connector of less than 1.7:1 from 88 MHz to 108 MHz.

Provide antenna mounting bracket positioned at the antenna center of gravity and provide clamping to a mast with a maximum diameter of 2.5 inches.

Provide:

Blonder Tongue BTY-5-LB (FM) (4866 FM) -or-
Lindsay 5RFT-FM -or-
Scala CL-FM

Quantity: One (1)

2.12.4 FM RF Preamplifier with Power Supply

Provide and install a FM RF Preamplifier. Provide a preamplifier with a solid state, low noise design utilizing field-effect transistors. Provide preamplifier with a noise figure better than 3 dB and with actual measured noise figure stamped on the case. Provide equipment with the circuit design which allows for a wide range of input signal levels and gain of at least 24 dB. Provide equipment with bandwidth of 20 MHz (88 MHz to 108 MHz) with a flatness through the passband of 1dB or better.

Provide with die cast weatherproof case housing and weather resistant 75 ohm female "F" input and output connectors. Provide DC power di-plexed on the output connector and down lead. Provide an output test port with the level 20dB below the main output. Provide power supply which provides DC voltage and current to the preamplifier. Provide power supply with regulated output voltage clamped to provide protection to connected loads. Provide Female "F" type connectors to allow DC power to be di-plexed on the feed line from the preamplifier. Install preamplifier on mast below antenna. Install power supply with FM distribution equipment in central paging system equipment rack as required by the documents.

Provide:

Blonder Tongue SCMA-FM (4761-FM) pre-amplifier with PS-1536 (1536) power supply -or-
Scala 8000/2A FM pre-amplifier with 8000/PS power supply

Quantity: One (1)

2.12.5 Antenna Mounting Hardware

Provide hardware suitable for wall mounting FM antenna as required by the documents. Provide hardware consisting of a set of wall mount brackets, wall reinforcements fabricated of Unistrut material, 3/8 inch threaded rod with nuts, washers and lock washers, 2 inch mast of suitable length and all other material or hardware required for a sage installation. Provide completed mount and mast sufficient to hold the FM antenna at an operational/survival wind velocity of 125 MPH. Aim antenna for optimum reception of local and New York City radio stations.

Provide:

GC 8212 Wall mount bracket kit -or-
Approved Equal

Quantity: One (1)

2.12.6 FM Band pass Filter

Provide and install FM band pass filter within central paging system equipment rack . Provide FM band pass filter with a minimum of 30-dB attenuation at 82 MHz, 22-dB attenuation at 114 MHz and 70-dB attenuation at Channel 6. Provide with band pass response of within 0.75 dB through the FM band of 88 MHz to 108 MHz. Provide with input and output "F" connectors with 75 ohms impedance. Provide with insertion loss within the passband of less than 3.0 dB.

Provide: Blonder Tongue BPF-a FM (4414 FM) -or-
Microwave Filter Corporation 3303FM-16 (order with factory supplied rack panel)

Quantity: One (1), Y203 Tel/Data

2.12.7 FM Strip Amplifier

Provide and install FM strip amplifier. Provide FM strip amplifier with a minimum output level of +65 dBmV, minimum gain of 54 dB. Provide with noise figure at full gain better than 7.5 dB and with band pass flatness better than 1.0 dB from 88 MHz to 108 MHz. Provide with AGC of peak detector design, range of 40 dB and AGC stiffness <1.5 dB at rated output. Provide with input and output "F" connectors with 75 ohms impedance. Equipment must be powered from a standard 117 V, 60Hz power source.

Provide:

Blonder Tongue MCA-b FM (4454-FM) -or-
Approved Equal

Quantity: One (1) , Y203 Tel/Data

2.12.8 RF Directional Coupler (20 dB)

Provide and install RF directional coupler. Provide directional coupler with insertion loss of less than 0.7 dB and tap loss of 20-dB ±0.5 dB. Provide with tap to output isolation no less than 30 dB and with return loss no worse than 20 dB on the tap, input or output ports. Provide coupler with a die cast housing with integral mounting and grounding tabs.

Provide:

RMS 509 RAUV-20 -or-
Toner CATV Systems DCWRG-20 -or-
Blonder Tongue DCW-20 (4889-20)

Quantity: One (1) , Y203 Tel/Data

2.12.9 RF Splitters, 4 Way

Provide and install four way RF splitters. Provide four way splitters which exhibit a forward loss of less than 7.0 dB in the FM band, output to output isolation greater than 25 dB and RFI shielded to a minimum of 100 dB. Provide splitters with die cast housings with integral mounting and grounding tabs.

Provide:

Toner CATV Systems Four way splitter XGVS-4 -or-
RMS Four way splitter SV4GR -or-
Blonder Tongue Four way splitterCVS-4 (4084)

Quantity:

Three (3) , Y203 Tel/Data
One (1), Y136 Sound Closet

2.12.10 Female-Female "F" Connector

Provide and install wall plates with female-female "F" connector attached. Provide standard F-81 feed-through "F" connector with hardware installed at the center of the plate.

Provide:

RCI AVD-142 -or-
Blonder Tongue TF-GF-FT -or-
L-COM WPC-1 Wall plate BA-330A "F" Bulkhead feed-through with mounting hardware -or-
Approved Equal

Quantity: As required

2.13 CONFERENCE ROOM Z322 EQUIPMENT (BASE BID)

2.13.1 Projection Screen

Provide and install projection screens at the locations and sizes shown on the plans. Provide screen with a matte white viewing surface with a half axis gain of 1.3. Provide screen with black masking borders for the screen material standard on flame retardant and mildew resistant fabric. Provide screen with the fabric mounted on a metal roller mounted in vibration and noise absorbing supports. Provide screen with a tab guide system at each side of the fabric to maintain even lateral tension and to hold surface flat. Form the bottom of the fabric into a pocket holding a 3/8" diameter metal rod and insert into an aluminum slat.

Mount the motor in the roller with a three-wire quick reversal type capacitor and electric brake to prevent coasting. Provide motor with adjustable limit switches to automatically stop the picture surface in the up and down positions.

Provide case formed of 22-gauge steel with a flat back to prevent scraping of fabric. Provide powder coated case finished in black enamel. Provide case with end caps that do not allow the end of the roller to be exposed. Provide case with caps forming study brackets for wall or ceiling installation.

Provide screens complete with LOW VOLTAGE wall switch with box and cover plate.

Provide screen that is UL and CSA listed.

Provide:

Da-Lite Screen Company, Tensioned Cosmopolitan Electrol -or-
Draper Shade and Screen Company Premier -or-
Stewart Filmscreen Company Luxus Model A -or-
Approved Equal

Quantity: One (1)

2.13.2 Input Lines

Provide microphone inputs lines between Media Projection Z341and Conference Room Z322 for future audio/video conferencing system as specified elsewhere. Install in 1" steel conduit separate from any other cable.

Quantity: Four (4)

2.13.3 Video Cable

Provide microphone inputs lines between Media Projection Z341and Conference Room Z322 for future audio/video conferencing system as specified elsewhere. Install in 1-1/2" steel conduit separate from any other cable.

Quantity: Six (6)

PART 3 EXECUTION

3.1 INSTALLATION:

A. Supply and install any racks, wire, conduits, pull boxes, junction boxes and raceways required to provide a complete system, to the extent that such items are not provided by others. Unless specifically instructed to the contrary, install all system wiring in steel conduit. Do not exceed 30% fill in conduits.

B. Use separate steel conduits for microphone-level circuits (below -20 dBm), line-level circuits (up to +30 dBm), loudspeaker circuits (above +30 dBm), control circuits, and power circuits. Use audio conduit which is spaced at least 12 inches away from power conduit. Insulate all conduit from the equipment rack(s); ground conduit only to power system ground. Do not splice lines in conduit. Connect each input receptacle by an individual, insulated line to the system equipment rack.

C. Secure equipment firmly in place, including control panels, loudspeakers, conduit, amplifiers, racks, and cables. Make fasteners and supports adequate to support their loads with a safety factor of at least three.

D. Take precautions to prevent electromagnetic and electrostatic hum. Install the equipment to provide safe operation. Mount power amplifiers above any other equipment mounted in the same rack. Install a 3-1/2" vent panel above and below each power amplifier (one panel between adjacent power amplifiers).

E. Use terminal strips or blocks in all audio lines entering or leaving the system equipment rack(s). Make all joints and connections with rosin-core solder or with mechanical connectors appropriate for the service. Execute all wiring in strict adherence to standard broadcast practices.

F. Assemble and install equipment racks to permit access to connections and adjustments on the rear of rack-mounted components and to permit removal of components for servicing. For any components which, for purposes of adjustment or calibration, must be removed from an equipment rack while in use, provide adequate service loops on all connecting cables.

G. Provide safety cables to prevent individual loudspeaker components from falling in case of failure or loosening of the primary component support. Paint all exposed components as directed by the contracting officer.

H. Ground each shield at one point and one point only. Terminate shields at the "floating" end with insulating collars or plastic tape. Connect all audio grounds to a common point on the equipment rack(s). Ground this point and the rack(s) to the building main service ground point using a ground cable provided by others.

I. Locate microphone and line receptacles as directed by the contracting officer. Except for receptacles mounted in equipment cabinets or in floors or designated as surface-mounted,

flush-mount other receptacles on cover plates in gang boxes recessed in vertical surfaces. Provide plate finish as approved by the contracting officer.

J. Install work neatly, with boxes, equipment, etc., plumb and square. Keep the job adequately staffed at all times. Designate an employee as field supervisor to be present on the job site and in responsible charge during all phases of installation and check-out. Maintain same supervisor through completion of the work unless the designated supervisor ceases to be an employee or unless by mutual agreement with the contracting officer. Install the system in cooperation with other trades in order to achieve coordinated progress and satisfactory final results. Watch for conflicts with work of other trades on the job. Execute, without claim for extra payment, moderate moves or changes as are necessary to accommodate other equipment or preserve symmetry and pleasing appearance.

K. Clearly, consistently, logically and permanently mark switches, connectors, jacks, relays, receptacles, cables, and cable terminations. Engrave and paint-fill all panel and receptacle markings, directly on the material on which controls or receptacles are mounted. Fill engraving with black or white paint, whichever contrasts best with panel finish, or as directed by the contracting officer. Use no hand-lettering, embossed tape (e.g. "Dymo" labels), or any adhesive- or otherwise mechanically-attached labels for any labels visible to operators or public during normal system operation. Use adhesive- or screw-attached engraved or laminated labels (e.g., "Kroy" or "Brother") on manufactured assemblies, such as amplifiers, which otherwise would require disassembly for direct engraving. Use printed adhesive cable markers to mark cables, or other labels intended for the purpose. Use "Kroy" or "Brother" or similar machine-produced laminated labels, or "letter quality" or "near letter quality" mechanically-produced lettering for patch panel labels. Insert patch panel labels into clear plastic-covered label holders.

L. Label each receptacle with its type and a unique number; for example, "MIC 18", "LDSPKR 3". Label each jack with the name of the device to which it is connected, plus "IN" for input or "OUT" for output. In addition, label horizontal rows of jacks with letters "A", "B", etc., and vertical columns with numbers "1", "2", etc.

M. Paint or provide approved factory finishes for all system components exposed to public view as directed by contracting officer. Paint or otherwise remove all visible manufacturer's trademarks exposed to public view as directed by contracting officer.

N. If any item of equipment includes exposed controls which are not used in system operation, and if those controls cannot be locked, capped, or concealed behind a security cover, mount said item of

equipment recessed behind a blank rack panel.

O. Coordinate the selection of operating frequencies for UHF wireless microphone systems throughout the project with the Contracting Officer and ensure independent operation of each system. Also ensure that the wireless microphone systems do not cause interference with or receive unwanted signals from any other UHF Systems. If conflicts occur, make adjustments as directed by the Contracting Officer.

3.2 PROTECTION AND REPAIR OF EXISTING FINISHES AND STRUCTURES

A. Cut and patch all holes required for this installation.

B. Make good all materials and finishes cut into or damaged during installation.

C. On completion, remove all rubbish and unused materials from the premises, clean the premises where dirtied, and clean all equipment, removing all dirt, dust, stains, and fingerprints.

3.3 ELECTRONIC TEST EQUIPMENT

Provide the following test equipment for use during tests and adjustments and during acceptance testing and final adjustment of the system:

A. Continuously Variable Sine Wave Generator - 20 Hz to 20,000 Hz range within +1 dB with less than 0.5% THD at 1 volt output into 600 ohms.

B. AC Voltmeter with frequency response within +1 dB from 20 to 20,000 Hz, 0.0001 volts to 100 volts, minimum input impedance 0.1 meg ohm.

C. Multimeter (VOM) (may be included with AC Voltmeter)

D. Oscilloscope with at least 5 MHz bandwidth and external horizontal input. Vertical sensitivity to 10 mV/division or less.

E. Impedance Measuring Device, capable of measuring at 1,000 Hz and within each loudspeaker's passband (at center of passband or at least one octave removed from crossover frequency), minimum range 0 to 1,000 ohms.

F. Connectors, Adapters, Cables, etc. to permit flexible interconnection of test equipment and convenient, reliable connection to receptacles, patch panels and amplifier terminal strips.

G. Laptop personal computer with software as provided for any computer-controlled equipment.

H. Table to support test equipment at system equipment rack, minimum 30" square. (Required only during acceptance testing.)

3.4 INITIAL POST-COMPLETION TESTS AND ADJUSTMENTS

Perform these tests and adjustments. Furnish equipment necessary to perform these tests, and perform work required to modify the performance of the system in accordance with this specification.

3.4.1 Loudspeaker Line Impedance

Measure the resistance and impedance of each loudspeaker line leaving the system equipment rack, with the line disconnected from its normal driving source. Measure impedance within each loudspeaker's passband (at center of passband or at least one octave removed from crossover frequency). Verify that values are within +10% of the value calculated for that circuit based upon the parallel impedences/resistances of the loudspeakers connected plus the resistance of the loudspeaker line. Correct any discrepancies.

3.4.2 Loudspeaker Phasing

Perform phasing checks of loudspeaker lines by means of a DC source at one end of each line and a voltmeter at the other end. Phase all loudspeaker lines identically with respect to color coding.

3.4.3 Hum and Noise Level

Measure the hum and noise levels of the overall system. Adjust gain controls for optimum signal-to-noise ratio. The adjustment shall also be such that full power amplifier output would be achieved with +8 dBm input. Terminate inputs with shielded resistors of 600 ohms for these measurements. Disconnect the loudspeaker lines and terminate the power amplifier outputs with power resistors for these measurements. Use load resistors matching the rated load impedance and output power of the amplifier.

3.4.4 Power Output and Signal Level Adjustments

Measure the electrical distortion of the overall system. Adjust gain controls as for the tests specified in the preceding paragraph. Set variable equalizers for flat response. Apply a 1,000 Hz sine-wave signal to the input tested, at a level required to produce full amplifier output. Use a distortion analyzer to measure the output level and total harmonic distortion of the amplification equipment. (In the absence of a distortion analyzer, a VTVM or transistor voltmeter may be used to measure the output level, and lack of clipping or apparent deformation of a sine-wave input signal at the power amplifier output, as seen on an oscilloscope as specified, may serve as evidence that distortion of amplification and control equipment is within acceptable limits, subject to review by the contracting officer.) Make all measurements with loads actually incurred in system operation. (Power amplifier loads shall be resistors equal to the nominal impedance of the output terminals used in the system.)

3.4.5 Freedom from Parasitic Oscillation and Radio-Frequency Pick-up

Check to insure that the system is free from spurious oscillation and

radio-frequency pick-up, both in the absence of any audio input signal and also when the system is driven to full output at 100 Hz. Employ an oscilloscope as specified.

3.4.6 Freedom from Buzzes, Rattles, and Objectionable Distortion

Apply a slow sine-wave sweep from 50 to 5,000 Hz at a level of 6 dB below rated power amplifier output voltage. Listen carefully for buzzes, rattles, and objectionable distortion. Correct any causes of these defects, unless the cause is clearly outside the sound amplification system equipment and installation, in which case bring the cause to the attention of the contracting officer.

3.4.7 Gain Control Settings

Establish tentative normal settings for all gain controls. Adjust all gain controls for optimum signal-to-noise ratio and signal balance.

3.4.8 Freedom From Switching Transient Noise

Eliminate audible clicks or pops produced by the operation of any controls.

3.4.9 Listening Test

Listen to normal program material to be sure that there are no remaining defects.

3.4.10 Report

Upon completion of above tests and adjustments, submit two copies of a written report presenting test results, including numerical values, for review by the contracting officer prior to demonstration and acceptance testing. With this report, submit written certification that the installation conforms to the requirements stated herein, is complete in all respects, and is ready for inspection and testing by the contracting officer.

3.5 DEMONSTRATION AND ACCEPTANCE TESTING OF COMPLETED INSTALLATION

Upon approval of the above test report by the contracting officer and at a mutually agreeable time, demonstrate operation of each major component and of the complete installation. After demonstration, assist as required in acceptance tests.

3.5.1 Listening Tests

These tests will include subjective evaluation by observers listening at various positions under various operating conditions of the system, intended to test its operation in conformance with its functional requirements.

3.5.2 Equipment Tests

1. Perform any measurements of frequency response, distortion, noise

or other characteristics and any operational tests deemed necessary by the contracting officer to determine conformity with these requirements.

2. If the need for adjustment or modification becomes evident during demonstration and testing, continue working until the installation operates properly.

3.5.3 Final Adjustments

Make control adjustments as directed by the contracting officer. Make a record of these control settings. Provide covers, caps, or shaft-locks for controls not used in system operation.

-- End of Section --

Appendix A

Standard Data Exchange Format
Specification 15 June 1995

INTENTIONALLY BLANK

STANDARD DATA EXCHANGE FORMAT SPECIFICATION

PART 1- GENERAL

1. Application of This Provision: The Standard Data Exchange Format (SDEF) provides a non-proprietary protocol to exchange project planning and progress data between scheduling systems.

2. File Type and Format: The data file shall consist of a 132 character, freed format, "ASCII" file. Text shall be left-justified and numbers shall be right-justified in each field. Data records must conform, exactly, to the sequence, column position, maximum length, mandatory values, and field definitions described below to comply with the SDEF. Unless specifically stated, all numbers shall be whole numbers. Fields containing numbers shall not be zero filled. All data columns shall be separated by a single blank column. The file shall not contain blank lines.

3. Usage Notes: Where appropriate, notes regarding proper usage of systems to support the SDEF have been included in brackets ([ ]). These notes are included to assist users in creating SDEF-compatible files, given the variety of software systems that support the SDEF.

4. Recommended Systems: Several systems have been tested to determine the accuracy of importing and exporting SDEF files. For information on the current list of recommended systems, please contact Mr. Stan Green at HQUSACE, (202) 761-0206. Although the currently listed system have been tested other systems may also be acceptable provided those systems correctly import and export SDEF files.

5. SDEF Checker Program: A program that checks whether a file meets the SDEF is available free of charge. A copy of this program may be obtained by written request to: U.S. Army Corps of Engineers, ATTN: Mr. Bill East (CECER-FFA), P.O. Box 9005, Champaign, IL 61826-90005. A description of the SDEF Checker is also available on the Internet and CivilNet.

PART 2- SDEF SPECIFICATION

6. SDEF Organization: The SDEF shall consist of the following records provided in the exact sequence shown below:

Paragraph Reference	Record Description	Remarks
6.a	Volume Record	Mandatory First Line of File
6.b	Project Record	Mandatory Second Line of File
6.c	Calendar Record(s)	Mandatory One Record Minimum
6.d	Holiday Record(s)	Mandatory if Holidays Used
6.e	Activity Record(s)	Mandatory Records
6.f	Precedence Record(s)	Mandatory for Precedence
6.g	Unit Cost Record(s)	Mandatory for Unit Costs
6.h	Progress Record(s)	Mandatory Records
6.i	File End Record	Mandatory Last Line of Disk/File

6.a. Volume Record: The Volume Record shall be used to control the transfer of data that may not fit on a single disk. The first line in every file used to store SDEF data shall be the Volume Record. The Volume Record shall sequentially identify the number of the data transfer disk(s). The Volume Record shall have the following format:

Description	Column Position	Max. Len.	Req. Value	Type	Notes
RECORD IDENTIFIER	1 - 4	4	VOLM	Fixed	Filled
DISK NUMBER	6 - 7	2	√	Number	Right Justified

6.a.(1) The RECORD IDENTIFIER is the first four characters of this record. The required value for this field shall be "VOLM". The VOLM record must appear on the first line of the SDEF data file.

6.a.(2) The DISK NUMBER field shall identify the number of the data disk used to store the data exchange information. If all data may be contained on a single disk, this field shall contain the value of "1". If more disks are required, then the second disk shall contain the value "2", the third disk shall be designated with a "3", and so on. Identifcation of the last data disk is accomplished in the Reject End Record.

6.b. Project Record: The Project Identifier Record shall contain general project information. Because more than one SDEF file may be required for data transfer between large projects, the PROJ record shall be the second line of the first SDEF file transferred. The PROJ record shall contain information in the following format:

Description	Column Position	Max. Len.	Req. Value	Type	Notes
RECORD IDENTIFIER	1- 4	4	PROJ	Fixed	Filled
DATA DATE	6- 12	7	√	ddmmmyy	Filled
PROJECT IDENTIFIER	14-17	4	√	Alpha.	Left Justified
PROJECT NAME	19-66	48	√	Alpha.	Left Justified
CONTRACTOR NAME	68-103	36	√	Alpha.	Left Justified
ARROW OR PRECEDENCE	105-105	1	A,P	Fixed	Filled
CONTRACT NUMBER	107-112	6	√	Alpha.	Left Justified
PROJECT START	114-120	7	√	ddmmmyy	Filled
PROJECT END	122-128	7	√	ddmmmyy	Filled

6.b.(1) The RECORD IDENTIFIER is the first four characters of this record. The required value for this field shall be "PROJ". This record shall contain the general project information and indicates which scheduling method shall be used.

6.b.(2) The DATA DATE is the date of the schedule calculation. The abbreviation "ddmmmyy" refers to a date format that shall translate a date into two numbers for the day, three letters for the month, and two numbers for the year. For example, March 1, 1999 shall be translated into 01Mar99. This same convention for date formats shall be used throughout the entire data format. To ensure that dates are translated consistently, the following abbreviations shall be used for the three character month code:

Abbreviation	Month
JAN	January
FEB	February
MAR	March
APR	April
MAY	May
JUN	June
JUL	July
AUG	August
SEP	September
OCT	October
NOV	November
DEC	December

6.b.(3) The PROJECT IDENTIFIER is a maximum four character abbreviation for the schedule. These four characters shall be used to uniquely identify the project and specific update as agreed upon by Contractor and Contracting Officer. When utilizing scheduling software these four characters shall be used to select the project. Software manufacturers shall provide information to users to ensure that data importing programs do not automatically overwrite other schedules with the same PROJECT IDENTIFIER.

6.b.(4) The PROJECT NAME field shall contain the name and location of the project edited to fit the space provided. The data appearing here shall appear on scheduling software reports. The abbreviation "Alpha." refers to an "Alphanumeric" field value and shall be used throughout the remainder of this specification.

6.b.(5) The CONTRACTOR NAME field shall contain the Construction Contractor's name, edited to fit the space provided.

6.b.(6) The ARROW OR PRECEDENCE field shall indicate which method shall be used for calculation of the schedule. The value "A" shall signify the Arrow Diagramming Method. The value "P" shall signify the Precedence Diagramming Method. The ACTIVITY ID field of the Activity Record shall be interpreted differently depending on the value of this field. The Precedence Record shall be required if the value of this field is "P". [Usage note: software systems may not support both arrow and precedence diagramming. It is recommended that the selection of the type of network be based on the capabilities of the software used by project partners.]

6.b.(7) The CONTRACT NUMBER field shall contain the contract number for the project. For example, the construction contract number DACA85-89-C-0001 shall be entered into this field as "890001".

6.b.(8) The PROJECT START field shall contain the date that the Contractor acknowledges the Notice to Proceed (NTP). [Usage note: Software systems may use a project start date to constrain the first activity of a network. To ensure consistent scheduling calculations across products, it is recommended that the first activity in the schedule contain an EARLY START constraint and a software system's PROJECT START date only be used to report on the project's start date.]

6.b.(9) The PROJECT END field shall contain the date that the Contractor plans to complete the work as approved by the Contracting Officer. [Usage note: software systems may use a project end date to constrain the last activity of a network. To ensure consistent scheduling calculations across products, it is recommended that the last activity in the schedule contain an EARLY START constraint and a software system's PROJECT END date only be used to report on the project's end date.]

6.c. Calendar Record: The Calendar Record(s) shall follow the Project Identifier Record in the first disk of data transferred. A minimum of one Calendar Record shall be required for all data exchange activity files. The format for the Calendar Record shall be as follows:

Description	Column Position	Max. Len.	Req. Value	Type	Notes
RECORD IDENTIFIER	1-4	4	CLDR	Fixed	Filled
CALENDAR CODE	6-6	1	√	Alpha.	Filled
WORKDAYS	8-14	7	SMTWTFS	Fixed	Filled
CALENDAR DESCRIPTION	16-45	30	√	Alpha.	Left Justified

6.c.(1) The RECORD IDENTIFIER shall always begin with "CLDR" to identify it as a Calendar Record. Each Calendar Record used shall have this identification in the first four columns. [Usage note: Systems contain a variety of calendar options. It is recommended that the least common denominator of calendar features between the systems be used as the basis for creating the SDEF file for a given project.]

6.c.(2) The CALENDAR CODE shall be used in the activity records to signify that this calendar is associated with the activity. [Usage note: Some systems do not allow for alphanumeric CALENDAR CODES, but only allow positive integers from 1 to 9. It is recommended that only positive integers be used for the CALENDAR CODE field to support the widest variety of scheduling systems.]

6.c.(3) The WORKDAYS field shall contain the work-week pattern selected with "Y", for Yes, and "N", for No. The first character shall be Sunday and the last character Saturday. An example of a typical five (5) day work-week would be NYYYYYN. A seven (7) day work-week would be YYYYYYY.

6.c.(4) The CALENDAR DESCRIPTION shall be used to briefly describe the calendar used.

6.d. Holiday Record: The Holiday Record(s) shall follow the Calendar Record(s) in the first disk of data transferred. There may be calendars without any holidays designated or several Holiday Records for each Calendar Record(s). The format for the Holiday Record shall be as follows:

Description	Column Position	Max. Len.	Req. Value	Type	Notes
RECORD IDENTIFIER	1-4	4	HOLI	Fixed	Filled
CALENDAR CODE	6-6	1	√	Alpha.	Filled
HOLIDAY DATE	8-14	7	√	ddmmmyy	Filled
HOLIDAY DATE	16-22	7	-	ddmmmyy	May be Filled
HOLIDAY DATE	24-30	7	-	ddmmmyy	May be Filled
HOLIDAY DATE	32-38	7	-	ddmmmyy	May be Filled
HOLIDAY DATE	40-46	7	-	ddmmmyy	May be Filled
HOLIDAY DATE	48-54	7	-	ddmmmyy	May be Filled
HOLIDAY DATE	56-62	7	-	ddmmmyy	May be Filled
HOLIDAY DATE	64-70	7	-	ddmmmyy	May be Filled
HOLIDAY DATE	72-78	7	-	ddmmmyy	May be Filled
HOLIDAY DATE	80-86	7	-	ddmmmyy	May be Filled
HOLIDAY DATE	88-94	7	-	ddmmmyy	May be Filled
HOLIDAY DATE	96-102	7	-	ddmmmyy	May be Filled
HOLIDAY DATE	104-110	7	-	ddmmmyy	May be Filled
HOLIDAY DATE	112-118	7	-	ddmmmyy	May be Filled
HOLIDAY DATE	120-126	7	-	ddmmmyy	May be Filled

6.d.(1) The RECORD IDENTIFIER shall always begin with "HOLI". Each Holiday Record used shall have this identification in the first four columns.

6.d.(2) The CALENDAR CODE indicates which work-week calendar the holidays shall be applied to. More than one HOLI record may be used for a given CALENDAR CODE.

6.d.(3) The HOLIDAY DATE shall contain the date of each individual non-work day.

6.e. Activity Records: Activity Records shall follow any Holiday Record(s). If there are no Holiday Record(s), then the Activity Records shall follow the Calendar Record(s). There shall be one Activity Record for every activity in the network. Each activity shall have one record in the following format:

Description	Column Position	Max. Len.	Req. Value	Type	Notes
RECORD IDENTIFIER	1-4	4	ACTV	Fixed	Filled
ACTIVITY ID	6-15	10	√	Integer	See Comment Below
ACTIVITY DESCR.	17-46	30	√	Alpha.	Left Justified
ACTIVITY DURATION	48-50	3	√	Integer	Right Justified
CONSTRAINT DATE	52-58	7		ddmmmyy	May be Filled
CONSTRAINT TYPE	60-61	2		ES or LF	May be Filled
CALENDAR CODE	63-63	1	√	Alpha.	Filled
HAMMOCK CODE	65-65	1	Y, blank	Fixed	May be Filled
WORKERS PER DAY	67-69	3		Integer	Right Justified
RESPONSIBILITY CODE	71-74	4		Alpha.	Left Justified
WORK AREA CODE	76-79	4		Alpha.	Left Justified
MOD OR CLAIM NO.	81-86	6		Alpha.	Left Justified
BID ITEM	88-93	6		Alpha.	Left Justified
PHASE OF WORK	95-96	2		Alpha.	Left Justified
CATEGORY OF WORK	98-98	1		Alpha.	May be Filled
FEATURE OF WORK	100-128	30		Alpha.	Left Justified

6.e.(1) The RECORD IDENTIFIER for each activity description record must begin with the four character "ACTV" code. This field shall be used for both the Arrow Diagram Method (ADM) and Precedence Diagram Method (PDM),

6.e.(2) The ACTIVITY ID consists of coding that shall differ, depending on whether the ADM or PDM method was selected in the Project Record. If the ADM method was selected then the field shall be interpreted as two right-justified fields of five (5) integers each. If the PDM method was selected the field shall be interpreted as one (1) right-justified field of ten (10) integers each. The maximum activity number allowed under this arrangement is 99999 for ADM and 9999999999 for the PDM method. [Usage note: Many systems allow alphanumeric ACTIVITY IDs. While the SDEF does not strictly, allow the use of alphanumeric values, users may agree to use the ACTIVITY ID field to exchange alphanumeric data. It is recommended that the ACTIVITY ID be restricted to integers when one or more of the systems being used for scheduling allows only integer ACTIVITY ID values.]

6.e.(3) The ACTIVITY DESCRIPTION shall be a maximum of 30 characters. Descriptions must be limited to the space provided.

6.e.(4) The ACTIVITY DURATION contains the estimated original duration for the activity on the schedule. The duration shall be based upon the work-week designated by the activity's related calendar.

6.e.(5) The CONSTRAINT DATE field shall be used to identify a date that the scheduling system may use to modify float calculations. If there is a date in this field, then there must be a valid entry in the CONSTRAINT TYPE field.

6.e.(6) The CONSTRAINT TYPE field shall be used to identify the way that the scheduling system shall use the CONSTRAINT DATE to modify schedule float calculations. If there is a value in this field, then there must be a valid entry in the CONSTRAINT DATE field. The valid values for the CONSTRAINT TYPE are as follows:

Code	Definition
ES	The CONSTRAINT DATE shall replace an activity's early start date, if the early start date is prior to the CONSTRAINT DATE.
LF	The CONSTRAINT DATE shall replace an activity's late finish date, if the late finish date is after the CONSTRAINT DATE.

[Usage note: Systems provide a wide variety of constraint types that may not be supported by other systems. It is recommended that constraint types be restricted to the values above regardless of the capabilities of the various systems being used for scheduling.]

6.e.(7) The CALENDAR CODE relates this activity to an appropriate work-week calendar. The ACTIVITY DURATION must be based on the valid work-week referenced by this CALENDAR CODE field.

6.e.(8) The HAMMOCK CODE indicates that a particular activity does not have its own independent duration, but takes its start dates from the start date of the preceding activity (or node) and takes its finish dates from the finish dates of its succeeding activity (or node). If the value of the HAMMOCK CODE field is "Y", then the activity is a hammmock activity.

6.e.(9) The WORKERS PER DAY shall contain the average number of workers expected to work on the activity each day the activity is in progress. If this code is required by project scheduling specifications, values for this data will be right justified. Activities without workers per day shall have a value of "0".

6.e.(10) The RESPONSIBILITY CODE shall identify the subcontractors or major trade involved with completing the work for the activity. If this code is required by project scheduling specifications, value for this data will be left justified.

6.e.(11) The WORK AREA CODE shall identify the location of the activity within the project. If this code is required by project scheduling specifications, value for this data will be left justified.

6.e.(12) The MOD OR CLAIM NUMBER shall uniquely identify activities that are added or changed on a construction contract modification, or activities that justify any claimed time extensions. If this code is required by project scheduling specifications, value for this data will be left justified.

6.e.(13) The BID ITEM shall identify the bid item number associated with each activity. If this code is required by project scheduling specifications, value for this data will be left justified.

6.e.(14) The PHASE OF WORK shall identify the timing of a specific activity within the entire project. If this code is required by project scheduling specifications, value for this data will be left justified.

6.e.(15) The CATEGORY OF WORK shall identify the general type of work performed by every activity. If this code is required by project scheduling specifications, value for this data will be placed in the field.

6.e.(16) The FEATURE OF WORK shall identify a very broad designation of the general type of work that is being accomplished by the activity. If this code is required by project scheduling specifications, value for this data will be left justified. [Usage note: Many systems require that FEATURE OF WORK values be placed in several activity code fields. It is recommended that users review SDEF documentation to determine the correct way to use a given software system to produce the FEATURE OF WORK code.]

6.f. Precedence Record: The Precedence Record(s) shall follow the Activity Records if a Precedence Diagram Method schedule (PDM) is identified in the ARROW OR PRECEDENCE field of the Project Record. The Precedence Record has the following format:

Description	Column Position	Max. Len.	Req. Value	Type	Notes
RECORD IDENTIFIER	1 - 4	4	PRED	Fixed	Filled
ACTIVITY ID	6-15	10	√	Integer	See Comment Below
PRECEDING ACTIVITY	17 -26	10	√	Integer	See Comment Below
PREDECESSOR TYPE	28-28	1	√	S, F, C	Filled
LAG DURATION	30-33	4	√	Integer	Right Justified

6.f.(1) The RECORD IDENTIFIER shall begin with the four characters "PRED" in the first four columns of the record.

6.f.(2) The ACTIVITY ID identifies the activity whose predecessor shall be specified in this record.

6.f.(3) The PRECEDING ACTIVITY number is the number of an activity that precedes the activity noted in the ACTIVITY ID field.

6.f.(4) The PREDECESSOR TYPE field indicates the type of relation that exists between the chosen pair of activities. Valid PREDECESSOR TYPE fields areas follows:

Code	Definition
S	Start-to-Start relation
F	Finish-to-Finish relation
C	Finish-to-Start relation

[Usage note: Some systems provide additional predecessor types that may not be supported by all other systems. It is recommended that predecessor types be restricted to the values above regardless of the capabilities of the various systems being used for scheduling.]

6.f.(5) The LAG DURATION field contains the number of days delay between the preceding and current activity. [Usage note: Some systems allow negative values for the LAG DURATION. Because these values are not supported by all other systems, it is recommended that values be restricted to zero and positive integers.]

6.g. Unit Cost Record: The Unit Cost Record shall follow all Precedence Records. If the schedule utilizes the Arrow Diagram Method, then the Unit Cost Record shall follow any Activity records. There shall be one Unit Cost Record for every activity that is not a lump sum activity. [Usage note: (1) It is recommended that users who wish to exchange unit cost data contact SDEF vendor representatives to determine the ability of the software system to import/export unit cost information. (2) If the software being used by each member of the project team supports unit cost data then users may wish to conduct a trial run of the SDEF data exchange with a two or three-activity network to ensure that unit cost data transfers as expected. If problems are found please consult vendor representatives for resolution prior to exchange of full project schedules. (3) Unit cost record data does not, in most systems, result in the correct values being placed in the ACTIVITY COST and COST TO DATE fields of the Progress (PROG) Record. Users must, at this time, manually transfer the data from the Unit Cost Record to the Progress Record.

The fields for this record shall take the following format:

Description	Column Position	Max. Len.	Req. Value	Type	Notes
RECORD IDENTIFIER	1 - 4	4	UNIT	Fixed	Filled
ACTIVITY ID	6-15	10	√	Integer	See Comment Below
TOTAL QTY	17-29	13	√	Format 8.4	Right Justified
COST PER UNIT	31-43	13	√	Format 8.4	Right Justified
QTY TO DATE	45-57	13	√	Format 8.4	Right Justified
UNIT OF MEASURE	59-61	3	√	Alpha.	Left Justified

6.g.(1) The RECORD IDENTIFIER shall be identified with the four characters 'UNIT" placed in the first four columns of the record.

6.g.(2) The ACTIVITY ID for each activity shall match the format described in the activity record. Each activity may have only one Unit Cost Record.

6.g.(3) The TOTAL QTY is the total amount of material to be used in this activity. This number consists of eight digits, one decimal point and four more digits. An example of a number in this format is "11111111.1111". If decimal places are not needed this field shall still contain a ".0000" in columns 25-29. [Usage note: Many systems support a different format for this value that does not include as many decimal places. It is recommended that users determine their requirements for significant digits based on the lowest common denominator of the software systems being used for a given project.]

6.g.(4) The COST PER UNIT is the cost, in dollars and cents, for each unit to be used in this activity. This number consists of eight digits, one decimal point, and four more digits. An example of a number in this format is "11111111.1111". If decimal places are not needed this field shall still contain a ".0000" in columns 39-43. [Usage note: Many systems support a different format for this value that does not include as many decimal places. It is recommended that users determine their requirements for significant digits based on the lowest common denominator of the software systems being used for a given project.]

6.g.(5) The QTY TO DATE is the quantity of material installed in this activity up to the data date. This number consists of eight digits, one decimal point, and four more digits. An example of a number in this format is "11111111.1111". If decimal places are not needed this field shall still contain a ".0000" in columns 53-57. [Usage note: Many systems support a different format for this value that does not include as many decimal places. It is recommended that users determine their requirements for significant digits based on the lowest common denominator of the software systems being used for a given project.]

6.g.(6) The UNIT OF MEASURE is an abbreviation that may be used to describe the units being measured for this activity. Valid values for this field are any meaningful English or metric unit, except "LS" for Lump Sum. Lump Sum activities are not to have Unit Cost Records.

6.h. Progress Record: Progress Record(s) shall follow all Unit Cost Record(s). If there are no Unit Cost Record(s), then the Progress Record(s) shall follow all Precedence Records. If the schedule utilizes the Arrow Diagram Method, then the Progress Record shall follow any Activity Records. One Progress Record is required for every activity in the Activity Record. The fields for this Record shall be provided in the following format:

Description	Column Position	Max. Len.	Req. Value	Type	Notes
RECORD IDENTIFIER	1-4	4	PROG	Fixed	Filled
ACTIVITY ID	6-5	10	√	Integer	See Comment Below
ACTUAL START DATE	17-23	7	√	ddmmmyy	Filled if Started
ACTUAL FINISH DATE	25-31	7	√	ddmmmyy	Filled if Finished
REMAINING DURATION	33-35	3	√	Integer	Right Justified
ACTIVITY COST	37-48	12	√	Format 9.2	Right Justified
COST TO DATE	50-61	12	√	Format 9.2	Right Justitied
STORED MATERIAL	63-74	12	√	Format 9.2	Right Justified
EARLY START DATE	76-82	7	√	ddmmmyy	Filled if Not Started
EARLY FINISH DATE	84-90	7	√	ddmmmyy	Filled if Not Finished
LATE START DATE	92-98	7	√	ddmmmyy	Filled if Not Started
LATE FINISH DATE	100-1067		√	ddmmmyy	Filled if Not Finished
FLOAT SIGN	108-1081		+,-	Fixed	Filled if Not Finished
TOTAL FLOAT	110-1123		√	Integer	R. Just. if Not Finished

6.h.(1) The RECORD IDENTIFIER shall begin with the four characters "PROG" in the first four columns of the record.

6.h.(2) The ACTIVITY ID for each activity for which progress has been posted shall match the format described in the Activity Record.

6.h.(3) An ACTUAL START DATE is required for all in-progress activities. The ACTUAL START DATE shall be the same as, or later than, the PROJECT START date contained in the Project Record. The ACTUAL START DATE shall also be the same as, or prior to, the DATA DATE contained in the Project Record. If there is an ACTUAL START DATE for an activity that there must also be a REMAINING DURATION, and the values for the EARLY START DATE and LATE START DATE are blank. [Usage note: Some systems allow default values for ACTUAL START DATE if the date is not entered by the user. Because the failure to include a start date for activities may result in different schedule calculations, it is recommended that the ACTUAL START DATE be required for all activities in progress.]

6.h.(4) An ACTUAL FINISH DATE is required for all completed activities. If the REMAINING DURATION of an activity is zero, then there must be an ACTUAL FINISH DATE. If there is an ACTUAL FINISH DATE, then values for the EARLY START DATE, LATE START DATE, EARLY FINISH DATE, LATE FINISH DATE, FLOAT SIGN, and TOTAL FLOAT shall be blank. [Usage note: Some systems allow default values for ACTUAL FINISH DATE if the date is not entered by the user. Because the failure to include a finish date for activities may result in different schedule calculations, it is recommended that the ACTUAL FINISH DATE be required for all activities in progress.]

6.h.(5)AREMAININ G DURATION is required for all activities. Activities that have not started shall have a remaining duration equal to their original duration. Activities completed based on time, shall have a zero (0) REMAINING DURATION. [Usage note: Systems have a variety of "short-cut" methods to determine the REMAINING DURATION value. It is recommended that users actually consider the time required to complete the remaining work on a given task, rather than allow a system to calculate the remaining duration based on the amount of work that has already been accomplished.]

6.h.(6) The ACTIVITY COST contains the estimated earned value of the work to be accomplished in the activity. An example of a number in this format is "1111111 11.11". If decimal places are not needed this field shall still contain a ".00" in the last three columns of this field. [Usage note: Users should inquire of software vendors if the user needs to add a zero in the data field to produce the default value "0.00".]

6.h.(7) The COST TO DATE contains the earned value for the activity. If there is an ACTUAL START DATE, then there must also be some value for COST TO DATE. An example of a number in this format is "111111111.11". If decimal places are not needed, this field shall still contain a ".00" in the last three columns of this field. The COST TO DATE is not tied to REMAINING DURATION. For example, if the REMAINING DURATION is "0", the COST TO DATE may only be 95% of the ACTIVITY COST. This difference may be used to reflect 5% retainage for punch list items. [Usage note: Systems implement cost information in different ways. It is recommended that users carefully review SDEF documentation and test results to determine how to ensure that SDEF data is exported correctly.]

6.h.(8) The STORED MATERIAL field contains the value of the material that the Contractor has paid for and is on site or in secure storage areas that is a portion of the COST TO DATE. An example of a number in this format is "111111111.11". If decimal places are not needed, this field shall still contain a ".00" in the last three columns of this field. [Usage note: Systems implement the stored materials field in a variety of ways. Many systems do not enforce STORED MATERIAL + COST TO DATE < ACTIVITY COST. To avoid potential confusion between systems, it is recommended that new activities be added to a schedule to reflect the cost of large equipment procurement rather than use the STORED MATERIALS field.]

6.h.(9) The EARLY START DATE indicates the earliest date possible that an activity can start as calculated by a CPM scheduling system or other Contracting Officer approved planning method. If the progress record for an activity contains an ACTUAL START DATE, then this field shall be blank.

6.h.(10) The EARLY FINISH DATE indicates the earliest date possible that an activity can finish as calculated by a CPM scheduling system or other Contracting Officer approved planning method. If the progress record for an activity contains an ACTUAL FINISH DATE, then this field shall be blank.

6.h.(11) The LATE START DATE indicates the latest date that an activity can begin as calculated by a CPM scheduling system or other Contracting Officer approved planning method. If the progress record for an activity contains an ACTUAL START DATE, then this field shall be blank.

6.h.(12) The LATE FINISH DATE indicates the latest date that an activity can finish as calculated by a CPM scheduling system or other Contracting Officer approved planning method. If the progress record for an activity contains an ACTUAL FINISH DATE, then this field shall be blank.

6.h.(13) The FLOAT SIGN indicates whether the float time calculated using a CPM scheduling system or other Contracting Officer approved planning method, is positive or negative in nature. If the progress record for an activity contains an ACTUAL FINISH DATE, then this field shall be blank. In the case of zero float this field shall be blank.

6.h.(14) The TOTAL FLOAT indicates the total float time. In the Precedence Diagram Method (PDM), the total float is the difference between the early and late start or finish dates. In the Arrow Diagram Method (ADM), the total float is equal to the late event time at the end of the activity, minus the sum of the early event time at the start of the activity plus the duration of the activity.

6.i. Project End Record: The Project End Record shall be used to identify that the data file is completed. If the ASCII End of File character is encountered, then data import programs shall use that character to infer that the data continues on the next disk. The user shall then be prompted for the next disk number, based on the VOLM record data. The Project End Record shall be the last record of the entire data file, and shall have the following format:

Description	Column Position	Max. Len.	Req. Value	Type	Notes
RECORD IDENTIFIER	1-3	3	END	Fixed	Filled

6.i.(1) The RECORD IDENTIFIER for the Project End Record shall be "END". Data contained in the data exchange file that occurs after this record shall not be used.

Appendix B Boring Logs B-101 through B-107 (inclusive) 02 March 1998 through 04 March 1998

CLIENT: MCPHAIL ASSOCIATES

CT NAME: ARVIN GYM

ION: WEST POINT, NY

DRILLER: J. Yarrow

INSPECTOR: A. Barjosef

DATE START: 3-3-98

DATE FINISH: 3-4-98

NEW ENGLAND BORING CONTRACTORS OF CT., INC.

129 KRIEGER LANE
GLASTONBURY, CT 06033
(860) 633-4649 -- (413) 733-1232
FAX (860) 657-8046

BORING No. B-101

SHEET 1 OF 1

ARCHITECT/ ENGINEER

FILE NO. MCPARVIN

SURFACE ELEV.

LINE & STATION

OFFSET

	Casing	Sampler	Core Barrel
TYPE	HW	SS	NQ
SIZE I.D.	4"	1-3/8"	2"
HAMMER WT.	300	140	
HAMMER FALL	24"	30"	

SAMPLE No.	DEPTH RANGE IN FEET	BLOWS PER 6" ON SAMPLER 0-6	6-12	12-18	18-24	REC.	CASING BLOWS/ CORING TIMES PER FT.	FIELD CLASSIFICATION AND REMARKS	Well Cons.	Installation Details
S1	0'-2'	1	12	14	14	5"		Brown Fine - Crs. Sand and Gravel, Little Silt, Trace of Cobbles		
S2	5'-7'	2	1	5	6	12"		5 Brown Silt, Little Fine Sand, Trace of Roots		
S3	10'-12'	9	10	9	14	18"		9 Brown/Gray Silt, Some Fine Gravel, Little Crs. Sand, Occ. Cobble		
S4	15'-16'5"	14	85	100/ 5"		12"				
	20'-20'9"	93	100/ 3"			9"		17 Gray/Brown Silt, Some Fine - Med. Sand, Little Fine Gravel, (Till)		
R1	23'-28'		CORED			12"	5 4 8 4 3	23 Run #1, Cored Cobbles and Boulders in Till, Rec. 12"		
S6	28'-28'11"	68	100/ 5"			7"				
R2	31'-36'		CORED			58"	5 6 6 9 9	31 Run #2, Cored Gray Granite, Rec. 58" Top of Bedrock @ 31'		
								36 End of Boring @ 36' Water @ 15' +/-		

NOTES: 1) The stratification lines represent the approximate boundary between soil types. Transitions may be gradual.

2) Water level readings have been made in the drill holes at times and under conditions stated on the boring logs

REMARKS:

CLIENT: MCPHAIL ASSOCIATES

PROJECT NAME: ARVIN GYM

LOCATION: WEST POINT, NY

DRILLER: J. Yarrow

INSPECTOR: A. Barjosef

DATE START: 3-3-98

DATE FINISH: 3-3-98

NEW ENGLAND BORING CONTRACTORS OF CT., INC.

129 KRIEGER LANE
GLASTONBURY, CT 06033
(860) 633-4649 -- (413) 733-1232
FAX (860) 657-8046

	Casing	Sampler	Core Barrel
TYPE	HW	SS	NQ
SIZE I.D.	4"	1-3/8"	2"
HAMMER WT.	300	140	
HAMMER FALL	24"	30"	

BORING No. B-102

SHEET 1 OF 1

ARCHITECT/ ENGINEER

FILE NO. MCPARVIN

SURFACE ELEV.

LINE & STATION

OFFSET

SAMPLE No.	DEPTH RANGE IN FEET	BLOWS PER 6" ON SAMPLER 0-6	6-12	12-18	18-24	REC.	CASING BLOWS/ CORING TIMES PER FT.	FIELD CLASSIFICATION AND REMARKS		Well Cons.	Installation Details
S1	4'-2'4"	5	6	7	5	12"		Concrete Sidewalk	4		
								Brown Fine - Crs. Sand and Gravel, Some Silt, Occ. Cobbles			
S2	5'-7'	7	8	9	13	18"					
S3	10'-12'	5	4	4	5	18"					
S4	15'-17'	6	6	5	4	6"					
S5	20'-22'	12	8	5	7	8"			21		
								Brown Fine Sand, Little Silt, Trace of Fine Gravel			
S6	25'-27'	14	7	7	8	12"					
S7	30'-30'10"	8	100/						30.8		
R1	31'-36'		4CORED			50"		Top of Bedrock	31		
							5				
							5	Run #1, Cored Gray Granite, Rec. 50"			
							5				
							5		36		
							3	End of Boring @ 36'			
								Water @ 28' +/-			

NOTES: 1) The stratification lines represent the approximate boundary between soil types. Transitions may be gradual.

2) Water level readings have been made in the drill holes at times and under conditions stated on the boring logs. Fluctuations in the level of groundwater may occur due to factors other

REMARKS:

CLIENT: MCPHAIL ASSOCIATES

PROJECT NAME: ARVIN GYM

LOCATION: WEST POINT, NY

t: J. Yarrow

INSPECTOR: A. Barjosef

DATE START: 3-2-98

DATE FINISH: 3-2-98

NEW ENGLAND BORING CONTRACTORS OF CT., INC.

129 KRIEGER LANE
GLASTONBURY, CT 06033
(860) 633-4649 -- (413) 733-1232
FAX (860) 657-8046

	Casing	Sampler	Core Barrel
TYPE	HW	SS	NQ
SIZE I.D.	4"	1-3/8"	2"
HAMMER WT.	300	140	
HAMMER FALL	24"	30"	

BORING No. B-103

SHEET 1 OF 1

ARCHITECT/ ENGINEER

FILE NO. MCPARVIN

SURFACE ELEV.

LINE & STATION

OFFSET

SAMPLE No.	DEPTH RANGE IN FEET	BLOWS PER 6" ON SAMPLER 0-6	6-12	12-18	18-24	REC.	CASING BLOWS/ CORING TIMES PER FT.	FIELD CLASSIFICATION AND REMARKS	Well Cons.	Installation Details
S1	4"-2'4"	10	12	15	23	14"		Concrete Sidewalk (4)		
								Brown Fine - Crs. Sand, Some Fine - Crs. Gravel, Little Silt, Occ. Cobble		
S2	5'-7'	11	7	12	14	17"				
S3	10'-12'	6	6	7	8	16"				
S4	15'-17'	6	3	3	3	8"				
S5	20'-22'	6	7	10	29	10"		(20) Gray Fine - Crs. Sand, Some Fine Gravel, Little Silt, Occ. Cobble		
	22'6"-27'6"	CORED				57"	5 6 5 8 6	(22.5) Run #1, Cored Gray Granite, Rec. 57" Top of Bedrock @ 22'6" (27.5) End of Boring @ 27'6" Water @ 12' +/-		

NOTES: 1) The stratification lines represent the approximate boundary between soil types. Transitions may be gradual.

2) Water level readings have been made in the drill holes at times and under conditions stated on the boring logs. Fluctuations in the level of groundwater may occur due to factors other than those present at the time measurements were made.

REMARKS:

CLIENT: MCPHAIL ASSOCIATES

PROJECT NAME: ARVIN GYM

LOCATION: WEST POINT, NY BORING

ENGINEER: J. Yarrow

INSPECTOR: A. Barjosef

DATE START: 3-5-98

DATE FINISH: 3-5-98

NEW ENGLAND BORING CONTRACTORS OF CT., INC.

129 KRIEGER LANE
GLASTONBURY, CT 06033
(860) 633-4649 -- (413) 733-1232
FAX (860) 657-8046

BORING No. B-104

SHEET 1 OF 1

ARCHITECT/ ENGINEER

FILE NO. MCPARVIN

SURFACE ELEV.

LINE & STATION

OFFSET

	Casing	Sampler	Core Barrel
TYPE	HW	SS	NQ
SIZE I.D.	4"	1-3/8"	2"
HAMMER WT.	300	140	
HAMMER FALL	24"	30"	

SAMPLE No.	DEPTH RANGE IN FEET	BLOWS PER 6" ON SAMPLER 0-6	6-12	12-18	18-24	REC.	CASING BLOWS/ CORING TIMES PER FT.	FIELD CLASSIFICATION AND REMARKS	Well Cons.	Installation Details
S1	4"-2'4"	12	17	19	68	14"		4" Asphalt Parking Lot Gray/Brown Silt, Some Fine - Crs. Sand, Little Fine Gravel, Trace of Brick Fragments, (Fill)		
S2	5'-7'	27	22	22	23	18"		6 Brown Fine - Crs. Sand, Some Fine Gravel, Little Silt, Few Cobbles		
S3	10'-12'	10	10	17	19	20"				
S4	15'-17'	13	15	20	19	22"				
S5	20'-22'	17	20	22	38	24"		21.5 Light Brown Fine - Crs. Sand, Trace of Fine Gravel		
S6	25'-27'	21	21	22	28	12"				
S7	30'-32'	23	23	38	70	6"				
S8	35'-37'	38	50	72	72	12"		35 Gray/Brown, Silty Fine - Med. Sand, Some Fine Gravel, Occ. Cobbles, (Till)		
R1	40'-45'	CORED				60"	6 6 6 7 8	39 Top of Bedrock 40 Run #1, Cored Gray Granite, Rec. 60" 45 End of Boring @ 45' Water @ 20' +/-		

NOTES: 1) The stratification lines represent the approximate boundary between soil types. Transitions may be gradual.

2) Water level readings have been made in the drill holes at times and under conditions stated on the boring logs. Fluctuations in the level of groundwater may occur due to factors other than those present at the time meas-

REMARKS:

CLIENT: MCPHAIL ASSOCIATES

PROJECT NAME: ARVIN GYM

I ION: WEST POINT, NY

...ER: J. Yarrow

INSPECTOR: A. Barjosef

DATE START: 3-4-98

DATE FINISH: 3-5-98

NEW ENGLAND BORING CONTRACTORS OF CT., INC.

129 KRIEGER LANE
GLASTONBURY, CT 06033
(860) 633-4649 -- (413) 733-1232
FAX (860) 657-8046

	Casing	Sampler	Core Barrel
TYPE	HW	SS	
SIZE I.D.	4"	1-3/8"	
HAMMER WT.	300	140	
HAMMER FALL	24"	30"	

BORING No. B-105

SHEET 1 OF 1

ARCHITECT/ ENGINEER

FILE NO. MCPARVIN

SURFACE ELEV.

LINE & STATION

OFFSET

SAMPLE No.	DEPTH RANGE IN FEET	BLOWS PER 6" ON SAMPLER 0-6	6-12	12-18	18-24	REC.	CASING BLOWS/ CORING TIMES PER FT.	FIELD CLASSIFICATION AND REMARKS	Well Cons.	Installation Details
S1	6"-2'6"	11	24	25	22	16"		Asphalt Road		
								5 Gray/Brown Fine - Crs. Sand, Some Silt, Little Fine Gravel		
S2	5'-7'	6	6	9	25	24"		5 Light Brown Silt, Some Fine Sand, Trace of Fine Gravel		
S3	10'-12'	12	16	12	15	18"		10 Brown Fine - Crs. Sand, Some Silt, Little Fine Gravel, Occ. Cobble		
S4	15'-17'	9	7	21	29	18"				
S5	20'-22'	9	28	30	38	20"				
S6	25'-25'10"	42	100/ 4"			6"		24 Brown Fine Sand, Some Silt, Little Fine Gravel, Few Cobbles, (Till) SS and Rollerbit Refusal @ 25'10" 25.8		
								End of Boring @ 25'10" Water @ 12' +/-		

NOTES: 1) The stratification lines represent the approximate boundary between soil types. Transitions may be gradual.

2) Water level readings have been made in the drill holes at times and under conditions stated on the boring logs. Fluctuations in the level of groundwater may occur due to factors other than those present at the time meas-

REMARKS:

CLIENT: MCPHAIL ASSOCIATES

PROJECT NAME: ARVIN GYM

LOCATION: WEST POINT, NY

DRILLER: J. Yarrow

INSPECTOR: A. Barjosef

DATE START: 3-4-98

DATE FINISH: 3-4-98

NEW ENGLAND BORING CONTRACTORS OF CT., INC.

129 KRIEGER LANE
GLASTONBURY, CT 06033
(860) 633-4649 -- (413) 733-1232
FAX (860) 657-8046

	Casing	Sampler	Core Barrel
TYPE	HW	SS	
SIZE I.D.	4"	1-3/8"	
HAMMER WT.	300	140	
HAMMER FALL	24"	30"	

BORING No. B-106

SHEET 1 OF 1

ARCHITECT/ ENGINEER

FILE NO. MCPARVIN

SURFACE ELEV.

LINE & STATION

OFFSET

SAMPLE No.	DEPTH RANGE IN FEET	BLOWS PER 6" ON SAMPLER 0-6	6-12	12-18	18-24	REC.	CASING BLOWS/ CORING TIMES PER FT.	FIELD CLASSIFICATION AND REMARKS	Well Cons.	Installation Details
S1	6"-2'6"	7	9	7	5	14"		Asphalt Road (5) Brown Silt, Some Fine - Crs. Sand, Little Fine - Crs. Gravel, (Fill)		
S2	5'-7'	6	6	12	6	8"		(9) End of Boring @ 9' - SSA Refusal No Water		

NOTES: 1) The stratification lines represent the approximate boundary between soil types. Transitions may be gradual.

2) Water level readings have been made in the drill holes at times and under conditions stated on the boring logs. Fluctuations in the level of groundwater may occur due to factors other than those present at the time meas-

REMARKS:

CLIENT: MCPHAIL ASSOCIATES

PROJECT NAME: ARVIN GYM

ATION: WEST POINT, NY

ER: J. Yarrow

INSPECTOR: A. Barjosef

DATE START: 3-4-98

DATE FINISH: 3-4-98

NEW ENGLAND BORING CONTRACTORS OF CT., INC.

129 KRIEGER LANE
GLASTONBURY, CT 06033
(860) 633-4649 – (413) 733-1232
FAX (860) 657-8046

	Casing	Sampler	Core Barrel
TYPE	HW	SS	
SIZE I.D.	4"	1-3/8"	
HAMMER WT.	300	140	
HAMMER FALL	24"	30"	

BORING No. B-107

SHEET 1 OF 1

ARCHITECT/ ENGINEER

FILE NO. MCPARVIN

SURFACE ELEV.

LINE & STATION

OFFSET

SAMPLE No.	DEPTH RANGE IN FEET	BLOWS PER 6" ON SAMPLER 0-6	6-12	12-18	18-24	REC.	CASING BLOWS/ CORING TIMES PER FT.	FIELD CLASSIFICATION AND REMARKS	Well Cons.	Installation Details
S1	3'-2'3"	7	6	8	18	6"		Asphalt Road (.3)		
								Gray/Brown Silt, Some Fine - Crs. Sand, Little Fine Gravel, (Fill) (5)		
S2	5'-7'	4	2	5	13	10"		Dark Gray Fine - Crs. Sand, Some Silt, Little Fine Gravel, Cobbles and Boulders		
S3	10'-12'	1	36	74	19	1"				
S4	15'-17'	13	7	9	25	8"		(20) End of Boring @ 20' - Rollerbit Refusal Water @ 12 +/-		

NOTES: 1) The stratification lines represent the approximate boundary between soil types. Transitions may be gradual.

2) Water level readings have been made in the drill holes at times and under conditions stated on the boring logs. Fluctuations in the level of groundwater may occur due to factors other than those present at the time measurements were made.

REMARKS:

INTENTIONALLY BLANK

Appendix C Lead Survey Arvin Gym - April 1993

LEAD SURVEY
ARVIN GYMNASIUM

WEST POINT
NEW YORK

PROJECT NO. D3135-0002
APRIL 1993

LEAD SURVEY

TABLE OF CONTENTS

I. INTRODUCTION AND DESCRIPTION OF SURVEY 1

II. DISPOSAL OF GENERATED CONSTRUCTION-RENOVATION WASTES 2

III. HEALTH AND SAFETY ISSUES RELATING TO POTENTIAL LEAD EXPOSURE DURING CONSTRUCTION-RENOVATION 3

IV. SUMMARY OF POSITIVE RESULTS 5

V. INSPECTION RESULTS 32

I. INTRODUCTION AND DESCRIPTION OF SURVEY

DEI conducted a lead paint inspection of the Arvin Gymnasium, United States Military Academy, West Point, New York. The inspection was completed by X-ray Fluorescence (XRF) Analyzer, utilizing a Warrington Microlead I. Additionally, bulk paint chip samples were collected where XRF readings were inconclusive (contradictory) or less than 1.3 milligrams per square centimeter (mg/cm^2). Bulk paint chip samples were analyzed by atomic absorption (AA) spectrophotometry. The bulk sample number shown in parentheses indicates the bulk sample corresponding to that homogeneous coating collected on a similar surface. Each DEI inspection team consisted of at least one licensed lead paint inspector.

The inspection was completed on a floor-by-floor basis incorporating the entire building, including the Crandall Pool facility. The DEI team zero standardized (calibrated) the XRF to the building's different structural components (brick/block, wood, wallboard, etc.), conducting substrate corrections where appropriate. The inspection strategy involved standardizing the XRF to a specific structural substrate (wood, brick, wallboard, etc.) then collecting readings from only that substrate, normally on a floor-by-floor basis.

The XRF and laboratory analytical (AA) results of the inspection are presented in Section V. Note that all construction surfaces are specified in the Material Description column. In certain instances, the construction of a surface was unknown or not recorded. DEI will provide all zero standardization, lead standard readings and substrate correction data upon request. The XRF results provided incorporate any required substrate corrections.

The Summary of Positive Results section of this report (Section IV) presents a summarization of the surfaces which tested "positive" for lead. The summary is presented by floor, fund category and section. For the purpose of this inspection, a "positive", or potentially lead-containing painted surface, is defined as greater than 1.2 mg/cm^2, by XRF, or 0.25 percent by AA.

Currently, no regulatory standards exist for "acceptable" or "safe" levels of lead in paint, which will be subject to abrasive blasting, sanding or other dust producing procedures during construction/ renovation activity. The Massachusetts Department of Public Health's (DPH) Childhood Lead Poisoning Prevention program establishes a "dangerous level of lead" as 1.2 mg/cm^2, when measured by XRF, or 0.5 percent when measured by laboratory analytical methods (AA). This standard is applicable to residential dwellings only, and is not a health-based standard but rather a standard based on the limitations of the testing methods. However, some limited and recent unpublished test data reviewed by DEI suggested that levels of lead in paint of 1.2 mg/cm^2 and 0.5 percent do not result in worker exposure over current regulatory limits, during dust-producing (i.e., abrasive blasting, sanding) procedures. Since no published data regarding health risks associated with disturbing lead-based painted surfaces are currently available for review, DEI recommended, based on its professional opinion, that all surfaces exhibiting XRF readings of greater than 1.2 mg/cm^2 be considered "positive", or potentially dangerous lead-containing surfaces. Furthermore, surfaces with XRF readings of 1.2 mg/cm^2 or less were sampled and laboratory analyzed for lead content by AA. Surfaces exhibiting a total lead content of greater than 0.25 percent were also considered positive, or potentially dangerous surfaces. The 0.25 percent limit was established by DEI by reducing the DPH standard (0.5 percent) by a factor of one-half. That lower percentage was set as a margin of safety considering the lack of published data associated with construction worker lead dust exposures during abrasive blasting or sanding lead-based paint coatings.

Based on the limits established above (1.2 mg/cm^2 by XRF and 0.25 percent by AA), the painted surfaces which tested positive (potentially dangerous lead-containing surfaces) are summarized in the Summary of Positive Results section of this report, Section IV.

II. DISPOSAL OF GENERATED CONSTRUCTION-RENOVATION WASTES

DEI contacted the Region 3 office of the State of New York Department of Environmental Conservation (DEC). The DEC is responsible for the promulgation and enforcement of solid and hazardous waste

handling and disposal regulations and guidelines. DEI spoke with Mr. James Yuchniewicz and Mr. William Moore, Hazardous Waste Inspectors with the Region 3 DEC. The DEC personnel explained that DEC policy allows for the disposal of painted building materials covered with lead-containing coatings as "regular" construction waste. That is, painted construction waste may be disposed in a State of New York permitted Construction and Demolition (C & D) or solid waste landfill. However, if the paint is removed or otherwise dislodged from the surface, the paint chips/debris are subject to treatment as hazardous waste. Dislodged lead-containing paint chips, debris or dust that are generated as a result of renovation work would need to be sampled and laboratory analyzed via the Toxicity Characteristic Leachate Procedure (TCLP), or otherwise treated and disposed of as a lead-containing hazardous waste.

A certain amount of liability will remain if the painted construction debris is disposed in a solid waste landfill according to the DEC's policy. Specifically, as the generator, the Academy will always be responsible for the handling and ultimate disposal or destinations of the wastes, regardless of current DEC policy.

III. HEALTH AND SAFETY ISSUES RELATING TO POTENTIAL LEAD EXPOSURE DURING CONSTRUCTION-RENOVATION ACTIVITIES

This lead paint inspection report provides a list of those surfaces which are painted with coatings containing potentially dangerous levels of lead, as defined in Section I herein. During the renovation of the Arvin Gymnasium, construction workers and building occupants could potentially be exposed to lead dust exposure hazards as a result of the physical disturbance (i.e. sanding, scraping, crumbling, abrasive blasting, etc.) of the coatings on those surfaces identified as potentially dangerous. To prevent or limit exposures to lead-containing dust, debris or fumes, the contractor should be required to prepare and implement a Lead Hazard Work Plan (Work Plan). The contractor's Work Plan should be specific to the work which will be conducted at the Arvin Gymnasium, and should contain sections covering: worker training; containment and decontamination; worker protection and exposure monitoring; public and environmental protection; waste handling and disposal, and; emergency procedures.

The sections of the contractor's Work Plan relating to worker protection, exposure monitoring and containment should be prepared after exposure levels have been determined. Worker exposure monitoring, background tests and other testing or monitoring deemed necessary should be performed by an industrial hygiene firm experienced in lead exposure monitoring. A pilot program should be initiated by the contractor and the industrial hygienist to establish the levels of airborne lead generated for each different renovation/construction activity (i.e. sanding, demolition, abrasive blasting, etc.). Through the pilot program, worker and area lead exposures can be established and the specific details of the Work Plan can be completed prior to the commencement of full-scale construction.

DEI recommends that the pilot program consist of monitoring the workers and worker activities during a "typical" day's work to establish worker exposure to dust and potential impact to the building occupants and the environment. With this approach, the contractor's site specific plans and procedures (i.e., containment, worker protection, respiratory protection, public and environment protection, etc.) can be prepared prior to the full-scale start of the construction work. Also, prior to the start of the construction, the contractor's emergency procedures (emergency telephone numbers, route map to the nearest hospital, nearest telephone, etc.) should be updated.

DEI also recommends that the contractor's submitted site specific Work Plan address how the contractor intends to handle and minimize the dust and paint chips generated during the work as well as clean-up of generated chips. Issues such as locations for workers to wash up after each shift should be addressed as well as work area restrictions (i.e., no workers under 18 years of age and no eating, drinking or smoking in the construction work areas).

Pre-project pilot programs are most successful when the pilot program is truly indicative of a "typical" work day or shift. Also, a period of time must be allowed between the pilot program and the actual commencement of construction for the site specific plans and procedures to be developed by the contractor, and properly reviewed by he Industrial Hygienist. In addition to the obvious health and environmental-related benefits, this approach will also greatly reduce the Academy's liabilities.

Torch cutting or burning of coatings containing potentially dangerous levels of lead must be avoided. If torch cutting or other hot work is required on structural beams or other surfaces identified as lead-containing, the coatings must first be removed from the area where the hot work will occur. DEI recommends the use of a caustic-based paste rather than chemical or methylene chloride-based products. The paint should be removed a safe distance (approximately one-foot) on either side of the torch cutting area. Generated wastes should be treated as hazardous. Workers should wear personal protective clothing to avoid caustic burns or other adverse conditions.

IV. SUMMARY OF POSITIVE RESULTS

Presented in this section is a summarization of the "positive", or potentially dangerous lead-containing painted surfaces. The information is presented by room designation provided to DEI by Sasaki Associates on a floor-by-floor basis according to Fund Categories.

FLOOR: BASEMENT **CATEGORY: 1.01**

BULK SAMPLE #	LOCATION/DESCRIPTION	MATERIAL CONSTRUCTION	SAMPLING METHOD	RESULT
	Foyer to Male Cadet Lockers, 0044:			
	Stairwell risers, Stairwell S6, black	M	XRF[1]	2.1
	Interior door to janitor closet #34, Room 0045, tan/cream	M	XRF	10.5
	Exterior door to janitor closet #34, Room 0045, tan/cream	M	XRF	10.5

FLOOR: BASEMENT **CATEGORY: 1.02**

BULK SAMPLE #	LOCATION/DESCRIPTION	MATERIAL CONSTRUCTION	SAMPLING METHOD	RESULT
	Room 0033:			
	Walls, white		XRF	1.4
	Walls, white		XRF	1.4
	Wall, white		XRF	1.5
	Ceiling, white	C	XRF	1.4
B-12	Door and door casing to Room 0034, gray	M	AA[2]	0.250%[3]
	Exterior entrance door, white	M	XRF	11.7
	Interior entrance door, green	M	XRF	11.7
	Room 0034:			
	Walls and ceiling, white	C	XRF	1.4
	Room 0035:			
	Walls and ceiling, white	C	XRF	1.4
	Walls and ceiling, white	C	XRF	1.5
	Room 0007:			
	Concrete wall, yellow	C	XRF	3.9
	Concrete wall, gray	C	XRF	2.0

[1]XRF = X-Ray Fluorescence Analyzer results in milligrams of lead per square centimeter
[2]AA = Atomic Absorption Method SW846
[3]% = Percent Lead
Material Construction: B=block or brick; C=concrete; M=metal; G=gypsum, wallboard or sheetrock; P=plaster; W=wood

FLOOR: BASEMENT **CATEGORY: 2.01**

BULK SAMPLE #	LOCATION/DESCRIPTION	MATERIAL CONSTRUCTION	SAMPLING METHOD	RESULT
	Room 0071:			
	Column, white	M	XRF	2.5
	Stairwell S12:			
	Column, red	M	XRF	5.0
	Stair riser, black	M	XRF	2.6
	Stair stringer, black	M	XRF	2.4
	Stair hand rail, black	M	XRF	2.6
	Stairwell S24			
	Stair riser, black	M	XRF	2.2
	Stair stringer, black	M	XRF	2.4
	Stairwell S23			
	Stair riser, black	M	XRF	2.4
	Stair stringer, black	M	XRF	2.5
	Stair hand rail, black	M	XRF	2.5
	Stairwell S11			
	Stair riser, black	M	XRF	2.5
	Stair stringer, black	M	XRF	2.3
	Stair hand rail, black	M	XRF	2.6
	Stairwell S22			
	Stair riser, black	M	XRF	2.3
	Stair stringer, black	M	XRF	2.4
	Stair hand rail, black	M	XRF	2.1

NOTE: All painted structural beams located throughout the Crandall Pool facility are positive.

FLOOR: BASEMENT **CATEGORY: 2.07**

BULK SAMPLE #	LOCATION/DESCRIPTION	MATERIAL CONSTRUCTION	SAMPLING METHOD	RESULT
	West Gym Mechanical Room 0046:			
	Column bases, gray	C	XRF	1.4
	Platform bases, black	C	XRF	1.9
	Pedestals for water tanks, cream	B	XRF	4.5
	Pedestals for large gate valves	B	XRF	4.3
	Chlorine storage room, interior block wall, dark gray	B	XRF	1.7
	Lower perimeter wall, light gray/dark gray	C	XRF	1.7
	Interior door casing to hall/Male Cadet Locker room, black	M	XRF	11.5
	HVAC ducting "Exhaust No. 36", gray	M	XRF	1.6
B-2	Large gate valves, black	M	AA	0.473%
	Interior door to Women Cadet Lockers, tan/cream	M	XRF	5.3
	Stairs to Women Cadet Lockers, gray	M	XRF	3.0
	Stair railings to Women Cadet Lockers, white	M	XRF	3.5
	Central Gym Mechanical Room Sub-Basement:			
	Walls (all), white	B	XRF	7.5
	Walls (all), white	B	XRF	8.7
	Walls (all), white	B	XRF	9.8

Columns (all), white	B	XRF	6.0
Columns (all), white	B	XRF	7.0
Columns (all), white	B	XRF	8.0
Room 0075:			
Piping, red	M	XRF	2.8

FLOOR: BASEMENT **CATEGORY: 3.01**

BULK SAMPLE # LOCATION/DESCRIPTION	MATERIAL CONSTRUCTION	SAMPLING METHOD	RESULT
Male Cadet Lockers, Room 0009:			
Columns, tan/cream	C	XRF	1.5
Columns, tan/cream	C	XRF	1.8
Columns, tan/cream	C	XRF	2.0
Male Cadet Showers, Rooms 0012-0021:			
Ceiling, white	P	XRF	2.0

FLOOR: BASEMENT **CATEGORY: 4.04**

BULK SAMPLE # LOCATION/DESCRIPTION	MATERIAL CONSTRUCTION	SAMPLING METHOD	RESULT
None Detected			

FLOOR: BASEMENT **CATEGORY: UNASSIGNED**

BULK SAMPLE # LOCATION/DESCRIPTION	MATERIAL CONSTRUCTION	SAMPLING METHOD	RESULT
Hallway 0036:			
Upper one-half stone wall, white		XRF	1.2
Lower one-half stone wall, gray		XRF	11.0
Lower one-half stone wall, green		XRF	1.6
Room 0037:			
Lower one-half brick/block, gray	B	XRF	18.3
Stone wall, green		XRF	1.6
Stone wall, white		XRF	1.5
Room 0038:			
Wall, gray	B	XRF	18.3
Stone perimeter wall, green		XRF	12.6
Door casing to transformer Room, light gray	M	XRF	2.0
Ski Room 0001, 0002:			
Perimeter columns, lower half, brown	C	XRF	1.4
Room 0054:			
Door to Room 0057, yellow	M	XRF	16.8
Door casing to Room 0057, black	M	XRF	2.0
Room 0058:			
Door, yellow	M	XRF	3.2
Stairwell S9:			
Stair riser, black	M	XRF	4.8

Stair stringer (inside), black	M	XRF	4.8
Stair stringer (outside), white	M	XRF	4.8
Stair hand rail, black	M	XRF	4.8

FLOOR: FIRST **CATEGORY: 1.01**

BULK SAMPLE #	LOCATION/DESCRIPTION	MATERIAL CONSTRUCTION	SAMPLING METHOD	RESULT
	Hall 1038:			
	Ceiling, yellow		XRF	5.5
	Wall. yellow		XRF	4.9
	Bathroom 1039:			
	Wall upper one-half, white		XRF	1.4
	Ceiling, white		XRF	1.5
	Stairwell S5:			
	Floor, gray		XRF	2.0
	Stair riser , black	M	XRF	11.5
	Stair stringer, black	M	XRF	11.5
	Stairwell S7:			
	Stair stringer (outside), white	M	XRF	3.0
B-37	Radiator outside Elevator E2 and stairs at Stairwell S41, tan/cream	M	AA	8.222%
	Room 1109:			
	Ceiling, white		XRF	2.3
	Stairwell S20:			
	Ceiling, white	C	XRF	2.3
	Hallway 1032:			
	Upper wall, yellow		XRF	1.7
	Upper wall, yellow		XRF	1.5

FLOOR: FIRST **CATEGORY: 1.02**

BULK SAMPLE #	LOCATION/DESCRIPTION	MATERIAL CONSTRUCTION	SAMPLING METHOD	RESULT
B-17	Radiator, silver	M	AA	0.778%
	Hall 1038:			
	Ceiling, yellow		XRF	5.5
	Wall. yellow		XRF	4.9
	Hallway 1040, 1037 and 1009:			
	Wall, yellow		XRF	5.5
	Wall, yellow		XRF	5.3
	Hallway to Weight Rooms 1048, 1054 (1051, 1050, 1049:			
	Wall, black	B	XRF	2.0
	Ceiling, black	B	XRF	2.0
	Foyer 1041:			
(B-17)	Radiator, silver	M	AA	0.778%
	Stairwell S4:			
	Walls, white		XRF	10.9
	Window sash, black		XRF	6.3
	Window sill, black		XRF	6.0
	Window mullions, black		XRF	6.0
	Entrance to Female Cadet Lockers, Stairwell S21:			
B-33	Stair hand rail, black	M	AA	3.098%
	Stairwell S1:			
	Wall, yellow	B	XRF	4.5
	Room 1036:			
	Wall and ceiling, white		XRF	4.0
	Rooms 1003 and 1004:			
	Office baseboard, black	W	XRF	2.1
	Office walls, white		XRF	1.7
	Office ceiling, white	c	XRF	1.7
	Office window mullions, white	m	XRF	1.7
	Foyer 1001:			
	Front foyer ceiling, white	P	XRF	4.5
	Foyer 1002:			
	Front foyer decorative ceiling, tan/brown	P	XRF	2.1
	Room 1006:			
	Beam and ceiling paint, white	M/C	XRF	4.5
	Room 1007:			
	Office ceiling, white	P	XRF	5.3

FLOOR: FIRST **CATEGORY: 2.02**

BULK SAMPLE #	LOCATION/DESCRIPTION	MATERIAL CONSTRUCTION	SAMPLING METHOD	RESULT
	Stairwell S11:			
	Stair riser, black	M	XRF	2.5
	Stair stringer, black	M	XRF	2.3
	Stair hand rail, black	M	XRF	2.6
	Support beams, tan	C	XRF	5.0
	Stairwell S22:			
	Stair riser, black	M	XRF	2.3
	Stair stringer, black	M	XRF	2.4
	Stair hand rail, black	M	XRF	2.1
	Stairwell S23:			
	Stair riser, black	M	XRF	2.4
	Stair stringer, black	M	XRF	2.5
	Stair hand rail, black	M	XRF	2.5
	Stairwell S24:			
	Stair riser, black	M	XRF	2.2
	Stair stringer, black	M	XRF	2.4
	Stairwell S12:			
	Stair riser, black	M	XRF	2.4
	Stair stringer, black	M	XRF	2.4
	Stair hand rail, black	M	XRF	2.6

NOTE: All structural steel throughout the Crandall Pool facility is positive.

FLOOR: FIRST **CATEGORY: 2.04**

BULK SAMPLE #	LOCATION/DESCRIPTION	MATERIAL CONSTRUCTION	SAMPLING METHOD	RESULT
	Room 1008:			
	Walls, white	C	XRF	6.3
	Ceiling, white	C	XRF	2.3

FLOOR: FIRST **CATEGORY: 2.06**

BULK SAMPLE #	LOCATION/DESCRIPTION	MATERIAL CONSTRUCTION	SAMPLING METHOD	RESULT
	Room 1105A:			
	Door, tan/cream	M	XRF	7.0
	Men's Lockers Room 1098:			
	Entrance doors by Stairwell S41, gray	M	XRF	16.0
	Entrance door casing by Stairwell S41, gray	M	XRF	16.0
B-34	Radiator, tan/cream	M	AA	8.327%
B-35	Walls, yellow	B	AA	0.257%
	Room 1098E:			
	Walls, dark yellow	B	XRF	2.0
	Room 1098F:			

Door, gray	M	XRF	2.0
Door casing, gray	M	XRF	2.0
Room 1099:			
Door, yellow	M	XRF	2.0
Door casing, black	M	XRF	2.0
Room 1100:			
Door, yellow	M	XRF	2.0
Door casing, black	M	XRF	2.0
Room 1092:			
Door, tan/cream	M	XRF	6.7
Room 1094:			
Door to Room 1097, tan/cream	M	XRF	9.5
Door to Room 1096, tan/cream	M	XRF	9.5
Doors to Room 1095 and Stairwell S9, tan/cream	M	XRF	9.5
Room 1097:			
Door to Room 1096 tan/cream	M	XRF	9.5
Room 1088:			
Doors (2), tan/cream	M	XRF	9.5
Room 1091:			
Door, tan/cream	M	XRF	9.5
Room 1090:			
Door, tan/cream	M	XRF	9.5
Room 1093:			
Door, tan/cream	M	XRF	9.5
Room 1089:			
Door, tan/cream	M	XRF	9.5
Stairwell S9:	M	XRF	1.7
Stair riser, black	M	XRF	3.0
Stair stringer (outside), white	M	XRF	2.3
Stair stringer (inside), black	M	XRF	3.1
Stair hand rail and balusters, black	M	XRF	3.1

FLOOR: FIRST **CATEGORY: 3.02**

BULK SAMPLE #	LOCATION/DESCRIPTION	MATERIAL CONSTRUCTION	SAMPLING METHOD	RESULT
	Boxing Gym 1047:			
(B-18)	Steel beams, white	M	AA	10.644%
	Hall 1042:			
(B-18)	Steel beams, white	M	AA	10.644%
	Boxing Gym 1044:			
B-18	Steel beam, white	M	AA	10.644%
B-19	Steel beam, white	M	AA	9.332%
B-20	Steel beam, white	M	AA	9.655%

	Weight Rooms 1048, 1054:			
	Window sash, white			
(B-18)	Steel beams, white	M	XRF AA	2.0 10.644%

FLOOR: FIRST

CATEGORY: 5.01

BULK SAMPLE #	LOCATION/DESCRIPTION	MATERIAL CONSTRUCTION	SAMPLING METHOD	RESULT
	Room 1008:			
	Walls, white	C	XRF	6.3
	Ceiling, white	C	XRF	2.3
	Room 1010:			
	Office wall, white	C	XRF	6.3
	Room 1022:			
	Wall, white	C	XRF	4.9
	Room 1024:			
	Wall, white	C	XRF	6.2
	Wall, white	C	XRF	6.0
	Room 1025:			
	Wall, white	C	XRF	5.3
	Room 1026:			
	Wall, yellow	C	XRF	4.5
	Hallway wall, yellow	C	XRF	6.2
	Room 1029:			
	Projection booth wall, yellow	C	XRF	4.6
	Wall, white	C	XRF	5.7
	Room 1030:			
	Wall, white	C	XRF	5.7

Room 1031:			
Office wall, white	C	XRF	5.9
Room 1033:			
Columns, white	B	XRF	1.5
Wall, white	B	XRF	1.4
Room 1035:			
Wall, white	B	XRF	1.3
Wall, white	B	XRF	1.4
Wall, white	B	XRF	1.3

FLOOR: FIRST **CATEGORY: 5.02**

BULK SAMPLE # / LOCATION/DESCRIPTION	MATERIAL CONSTRUCTION	SAMPLING METHOD	RESULT
Hallway 1068:			
Walls, yellow	B	XRF	16.0
Walls, yellow	B	XRF	15.3
Room 1060:			
Bath walls, yellow	B	XRF	1.8
Weight Room 1062:			
Door casing to Room 1064, tan/cream	M	XRF	2.0
Room 1064:			
Exterior door casing, tan/cream	W	XRF	2.0
Door casing to Room 1065, tan/cream	W	XRF	2.0
Door casing to Room 1064, tan/cream	M	XRF	2.0
Room 1065:			
Wall , gray	P	XRF	1.8
Room 1066:			
Door casing to Room 1067, tan/cream	M	XRF	2.0

FLOOR: FIRST (ACROSS STREET) **CATEGORY: UNASSIGNED**

BULK SAMPLE # / LOCATION/DESCRIPTION	MATERIAL CONSTRUCTION	SAMPLING METHOD	RESULT
Room 1034A:			
Ceiling, white		XRF	1.4
Window sash, brown		XRF	1.7
Window sill, brown		XRF	1.7
Window mullions, brown		XRF	1.7
Room 1141, 1137:			
Lower wall, gray		XRF	1.5
Upper wall, white		XRF	1.5
Column, white		XRF	1.5
Room 1045:			
Exterior door, black	M	XRF	10.5
Exterior door casing, black	M	XRF	10.4
Column, white		XRF	1.5
Wall, white		XRF	1.5

	Floor, gray	C	XRF	1.5
	Floor, gray	C	XRF	1.5
	Room 1044:			
	Wall, white		XRF	1.5

FLOOR: SECOND **CATEGORY: 1.01**

BULK SAMPLE #	LOCATION/DESCRIPTION	MATERIAL CONSTRUCTION	SAMPLING METHOD	RESULT
	Hallway 2021:			
	Door to Hayes Gym Room 2012, white	M	XRF	3.2
	Hallway 2014:			
	Walls, yellow			
B-40	Window components, brown	C/P	XRF	4.0
			AA	0.720%
	Stairwell S5:			
	Wall, yellow	B	XRF	19.0
	Stairwell S7:			
	Stair stringer (outside), white	M	XRF	3.0
	Stair stringer (inside), black	M	XRF	4.2
	Stair riser, black	M	XRF	3.1
	Stair baulester , black	M	XRF	4.2
	Hallway 2020:			
B-42	Radiator, second floor landing, tan/cream	M	AA	0.295%
	Hallway 2027:			
	Door to Room 2058, tan/cream	M	XRF	10.0
	Door to stairs at Stairwell S9, tan/cream	M	XRF	10.3
	Door to Room 2022, tan/cream	M	XRF	9.7
	Stairwell S9:			
	Stair stringer (inside), black	M	XRF	5.1
	Stair stringer (outside), white	M	XRF	2.9
	Stair riser, black	M	XRF	5.0
	Stair hand rail, black	M	XRF	2.8
	Underside of stairs, white	M	XRF	2.0
	Door, tan/cream	M	XRF	9.5
	Hallway 2029:			
	Door to hall Room 2033, tan/cream	M	XRF	10.3
	Door to Room 2030, tan/cream	M	XRF	10.0
	Hallway 2059:			
	Exterior window components , white	M	XRF	2.6
	Hallway 2050:			
	Door to Stairwell 13, brown	M	XRF	4.3
	Door casing to Stairwell 13, brown	M	XRF	4.3
	Stairwell S14:			
	Stair riser, black	M	XRF	2.4
	Stair stringer, black	M	XRF	2.8
	Stair hand rail and baluster, black	M	XRF	2.9

FLOOR: SECOND **CATEGORY: 1.02**

BULK SAMPLE #	LOCATION/DESCRIPTION	MATERIAL CONSTRUCTION	SAMPLING METHOD	RESULT
	Hallway 2013:			
	Window sill, black	W	XRF	13.5
	Window sash, black	W	XRF	12.9
	Window mullions, black	W	XRF	11.9
	Window casing, black	W	XRF	13.5
	Door frame to Room 2012, yellow	C	XRF	21.9
	Hallway 2001:			
	Window sash, yellow		XRF	3.0
	Window mullions, yellow		XRF	3.2
	Room 2003:			
	Wall, white	P	XRF	4.0
	Baseboards, brown	W	XRF	2.0
	Room 2004:			
	Walls, white	P	XRF	4.0
	Window sills, brown		XRF	2.0
	Window sash , brown		XRF	2.0
	Window mullions, brown		XRF	2.0
	Baseboard , brown	W	XRF	2.1
	Hallway 2006, 2002, 2001:			
	Wall, yellow	P	XRF	4.2
	Ceiling		XRF	2.0
	Hallway 2007:			
	Door casing, white	M	XRF	3.1
	Wall, yellow	P	XRF	3.7
	Ceiling		XRF	2.0
	Stairwell S1:			
	Wall, yellow	P	XRF	3.7
	Stairwell S2:			
	Wall, yellow	P	XRF	3.7

Stairwell S3:			
Stair riser, black	M	XRF	11.1
Stair stringer, black	M	XRF	10.9
Stair baluster, black	M	XRF	11.5

FLOOR: SECOND **CATEGORY: 2.03**

BULK SAMPLE #	LOCATION/DESCRIPTION	MATERIAL CONSTRUCTION	SAMPLING METHOD	RESULT
	Stairwell S11:			
	Stair riser, black	M	XRF	2.4
	Stai stringer, black	M	XRF	2.6
	Stair hand rail, black	M	XRF	2.6

NOTE: All structural steel throughout the Crandall Pool facility is positive.

FLOOR: SECOND **CATEGORY: 3.03**

BULK SAMPLE #	LOCATION/DESCRIPTION	MATERIAL CONSTRUCTION	SAMPLING METHOD	RESULT
	Hayes Gym 2012:			
	Window sills, black	W	XRF	1.9
	Window trim, black	W	XRF	1.8
	Window mullions, black	W	XRF	1.9
	Window sashes, black	W	XRF	2.0
	Support beam for elevated track, white	M	XRF	21.3
	Support column for elevated track, white	M	XRF	20.9

FLOOR: SECOND **CATEGORY: 3.04**

BULK SAMPLE #	LOCATION/DESCRIPTION	MATERIAL CONSTRUCTION	SAMPLING METHOD	RESULT
	Room 2009:			
	Wall, white		XRF	3.1
	Ceiling, white		XRF	2.9
	Door to Room 2010, white	M	XRF	3.9
	Door casing to Room 2010, white	M	XRF	4.1
	Ceiling, white		XRF	3.9

FLOOR: SECOND **CATEGORY: 3.05**

BULK SAMPLE #	LOCATION/DESCRIPTION	MATERIAL CONSTRUCTION	SAMPLING METHOD	RESULT
	Room 2008:			
	Wall, decorative		XRF	5.1
	Door casing to Room 2009, white	M	XRF	4.2
	Ceiling, white		XRF	5.0
	Interior door, white	M	XRF	4.2

North Gym 2065:			
Door casing to Hallway 2006, brown	M	XRF	4.0
Door casing to Hallway 2006, brown	M	XRF	3.9
Door casing to Hallway 2006, brown	M	XRF	3.6
Room 2063:			
Door casing to Room 2065, brown	M	XRF	6.9
Ceiling, white	P	XRF	1.8
Wall, white	C	XRF	1.8
Window sashes (5), black		XRF	4.7
Window mullions (5), black		XRF	4.5
Window sills (5), black		XRF	4.0
Exit door casing, brown	M	XRF	4.8
Door to Stairwell S15, brown	M	XRF	4.0
Door casing to Stairwell S15, brown	M	XRF	4.3
Room 2063A:			
Door, brown	M	XRF	3.0
Door casing, brown	M	XRF	3.0
Stairwell S16:			
Stair riser, black	M	XRF	12.7
Stair stringer, black	M	XRF	12.5
Stair hand rail and baluster, black	M	XRF	12.3

FLOOR: SECOND **CATEGORY: 4.01**

BULK SAMPLE #	LOCATION/DESCRIPTION	MATERIAL CONSTRUCTION	SAMPLING METHOD	RESULT
	Squash Courts Hallway 2033			
B-46	Doors, white	W	AA	0.381%
	Walls, white	P/C/W	XRF	1.7
	Walls, white	P/C/W	XRF	1.8
	Walls, white	P/C/W	XRF	1.9
	Walls, white	P/C/W	XRF	1.4
	Walls, white	P/C/W	XRF	1.8
	Walls, white	P/C/W	XRF	2.0
	Walls, white	P/C/W	XRF	2.1
	Walls, white	P/C/W	XRF	2.2
	Walls, white	P/C/W	XRF	2.3
	Walls, white	P/C/W	XRF	2.4
	Stairwell S28:			
	Door to Room 2050, tan/cream	M	XRF	8.0
	Door at top of stairs, gray	M	XRF	8.5

FLOOR: SECOND **CATEGORY: 4.02**

BULK SAMPLE #	LOCATION/DESCRIPTION	MATERIAL CONSTRUCTION	SAMPLING METHOD	RESULT

None Detected

FLOOR: SECOND **CATEGORY: 4.03**

BULK SAMPLE #	LOCATION/DESCRIPTION	MATERIAL CONSTRUCTION	SAMPLING METHOD	RESULT

	Mens Room 2030:			
	Door (2), tan/cream	M	XRF	9.7
	Squash Courts Hallway 2033:			
B-46	Doors, white	W	AA	0.381%
	Walls, white	P/C/W	XRF	1.7
	Walls, white	P/C/W	XRF	1.8
	Walls, white	P/C/W	XRF	1.9
	Walls, white	P/C/W	XRF	1.4
	Walls, white	P/C/W	XRF	1.8
	Walls, white	P/C/W	XRF	2.0
	Walls, white	P/C/W	XRF	2.1
	Walls, white	P/C/W	XRF	2.2
	Walls, white	P/C/W	XRF	2.3
	Walls, white	P/C/W	XRF	2.4
	Room 2038:			
	Gallery ceiling, white		XRF	3.5
	Room 2039:			
	Gallery walls, white		XRF	0.0

FLOOR: SECOND **CATEGORY: 4.04**

BULK SAMPLE #	LOCATION/DESCRIPTION	MATERIAL CONSTRUCTION	SAMPLING METHOD	RESULT
	Room 2022:			
	Door, tan/cream	M	XRF	9.7
	Room 2023:			
	Doors (2), tan/cream	M	XRF	10.7
	Room 2024:			
	Doors (2), tan/cream	M	XRF	12.6
	Room 2026:			
	Floor, gray		XRF	1.5
	Room 2025:			
	Doors (2), tan/cream	M	XRF	9.7
	Room 2026:			
	Door, tan/cream	M	XRF	10.3

	Room 2058:			
	Window mullions on perimeter windows, white		XRF	2.6
	Window sash on interior windows, white		XRF	2.6
B-43	Radiator, tan/cream	M	AA	6.870%
	Doors (5), tan/cream	M	XRF	9.7

FLOOR: SECOND **CATEGORY: 4.05**

BULK SAMPLE #	LOCATION/DESCRIPTION	MATERIAL CONSTRUCTION	SAMPLING METHOD	RESULT
	Stairwell S13 and Room 2051:			
B-50	Wall, white		AA	0.562%
	Room 2051A:			
	Wall, gray		XRF	2.0
	Wall, yellow		XRF	2.5
	Wall, black		XRF	3.0
	Ceiling, white		XRF	2.0
	Door to Room 2051H, black	M	XRF	2.0
	Door casing to Room 2051H, gray	M	XRF	2.1
	Room 2051B:			
	Door, brown	M	XRF	3.0
	Door casing, brown	M	XRF	2.9
	Closet wall, yellow		XRF	2.0
	Closet ceiling, yellow		XRF	2.0
	Room 2051C:			
	Door, brown	M	XRF	2.7
	Door casing, brown	M	XRF	2.9
	(interior of room inaccessable)			
	Room 2051D:			
	Door, brown	M	XRF	3.1
	Door casing, brown	M	XRF	2.6
	(interior of room inaccessable)			
	Room 2051E:			
	Door, brown	M	XRF	2.2
	Door casing, brown	M	XRF	2.0
	Wall, off white		XRF	2.6
	Ceiling, off white		XRF	2.0
	Room 2051F:			
	Door, brown	M	XRF	1.9
	Door casing, brown	M	XRF	2.3
	Wall, off white		XRF	1.7
	Ceiling, off white		XRF	1.9
	Room 2051G:			
	Door, brown	M	XRF	2.1
	Door casing, brown	M	XRF	2.2
	(interior of room inaccessable)			
	Room 2051H:			
	Wall, white		XRF	1.5
	Wall, white		XRF	1.7
	Wall, white		XRF	2.2

Ceiling, off white		XRF	1.9
Room 2051J:			
Door, brown	M	XRF	2.1
Door casing, brown	M	XRF	2.3
Wall, white		XRF	1.7
Ceiling, white		XRF	1.9
Mens Room 2051L:			
Door, brown	M	XRF	2.0
Door casing, brown	M	XRF	2.0
Walls, yellow		XRF	2.0
Ceiling, yellow		XRF	2.3
Stairwell S15:			
Stair stringer, mezzanine level, brown	M	XRF	3.0
Stair riser, mezzanine level, brown	M	XRF	3.5
Stair railing and baluster, mezzanine level, brown	M	XRF	3.0
Door to Room 2063, brown	M	XRF	4.0
Door casing to Room 2063, brown	M	XRF	4.2
Wall, yellow	P	XRF	2.5

FLOOR: THIRD **CATEGORY: 1.01**

BULK SAMPLE #	LOCATION/DESCRIPTION	MATERIAL CONSTRUCTION	SAMPLING METHOD	RESULT
	Hallway 3027:			
	Door casing to Room 3018, yellow	C	XRF	12.9
	Hallway 3023:			
	Walls, yellow	C	XRF	23.9
	Stairwell S5 (down):			
	Walls, yellow	C	XRF	18.9
	Risers, black	M	XRF	20.1
	Stringers, black	M	XRF	20.1
	Stairwell S5 (up):			
	Walls, yellow	C	XRF	18.9
	Risers, black	M	XRF	20.1
	Stringers, black	M	XRF	20.1
	Room 3031:			
	Ceiling, white		XRF	5.0
	Room 3032:			
	Ceiling, white		XRF	5.0
	Hallway 3034:			
	Door to Stairwell S9, tan/cream	M	XRF	9.9
	Door to hall Room 3039, tan/cream	M	XRF	10.3
	Door to Room 3036, tan/cream	M	XRF	9.3
	Stairwell S7:			
	Stair riser, black	M	XRF	4.2
	Stair stringer (inside), black	M	XRF	4.2
	Stair stringer (outside), white	M	XRF	3.1
	Stair baluster, black	M	XRF	4.2

Stairwell S9:			
Stair stringer (inside), black	M	XRF	5.1
Stair stringer (outside), white	M	XRF	2.9
Stair riser, black	M	XRF	5.0
Stair hand rail, black	M	XRF	2.8
Underside of stairs, white	M	XRF	2.0
Stairwell S10:			
Stair riser, black	M	XRF	6.3
Stair stringer, black	M	XRF	5.9
Stair hand rail, black	M	XRF	7.6
Window sash, black	M	XRF	4.9
Window sill, black	M	XRF	4.5
Window mullions, black	M	XRF	4.0
Stairwell S14:			
Stair riser, black	M	XRF	6.2
Stair stringer, black	M	XRF	6.0
Stair hand rail, black	M	XRF	6.9
Stair riser, black	M	XRF	2.4
Stair stringer, black	M	XRF	2.8
Stair hand rail and baluster, black	M	XRF	2.9
Hallway 3041:			
Ceiling, white	M	XRF	1.9
Ceiling, white	M	XRF	1.9
Room 3042:			
Door Room 3042, tan/cream	M	XRF	7.5
Stairwell S16:			
Stair riser, black	M	XRF	12.7
Stair stringer, black	M	XRF	12.5
Stair hand rail and baluster, black	M	XRF	12.3
Ceiling, yellow		XRF	2.1
Window sash, black		XRF	4.7
Window sill, black		XRF	4.5
Window mullions, black		XRF	4.0
Room 3046:			
Wall, yellow		XRF	2.0
Ceiling, yellow		XRF	2.1

FLOOR: THIRD **CATEGORY: 1.02**

BULK SAMPLE # / LOCATION/DESCRIPTION	MATERIAL CONSTRUCTION	SAMPLING METHOD	RESULT
Room 3019:			
Ceiling, white		XRF	19.9
Room 3020:			
Ceiling, white		XRF	19.9
Room 3021:			
Walls Room 3021, white		XRF	21.9
Ceiling Room 3021, white		XRF	22.6

Room 3022:				
Walls, white			XRF	23.2
Ceiling, white			XRF	21.9
Stairwell S17:				
Stair riser, black		M	XRF	9.8
Stair stringer (outside), black		M	XRF	12.6
Stair baluster and knewll post, black		M	XRF	9.9
Stairwell S3:				
Stair riser, black		M	XRF	9.8
Stair stringer, black		M	XRF	12.0
Stair baluster, black		M	XRF	9.6
Staiwell S1:				
Walls, yellow			XRF	2.8
Staiwell S2:				
Walls, yellow			XRF	2.8

FLOOR: THIRD **CATEGORY: 2.03**

BULK SAMPLE #	LOCATION/DESCRIPTION	MATERIAL CONSTRUCTION	SAMPLING METHOD	RESULT
	Room 3044:			
	Structural steel beams, red	M	XRF	3.0

NOTE: All structural steel throughout the Crandall Pool facility is positive.

FLOOR: THIRD **CATEGORY: 3.03**

BULK SAMPLE #	LOCATION/DESCRIPTION	MATERIAL CONSTRUCTION	SAMPLING METHOD	RESULT
	Room 3018:			
	Elevated track, rail, white	M	XRF	25.2
	Elevated track, structural steel, white	M	XRF	25.3

FLOOR: THIRD **CATEGORY: 4.01**

BULK SAMPLE #	LOCATION/DESCRIPTION	MATERIAL CONSTRUCTION	SAMPLING METHOD	RESULT
	Hallway 3040:			
	Floor, gray	C	XRF	1.3
	Floor, gray	C	XRF	1.3
	Floor, gray	C	XRF	1.3
	Walls, white		XRF	1.3
	Walls, white		XRF	1.5
	Walls, white		XRF	1.7
B-54	Hand rails, black	M	AA	5.933%
	Textured columns, white		XRF	1.3
	Window casing to main squash gallery		XRF	2.5
	Rooms 2039-2053:			
	Squash court ceilings, off white		XRF	2.0
	Stairwell S45:			

Door to Room 3041, tan/cream	M	XRF	7.9

FLOOR: THIRD **CATEGORY: 4.02**

BULK SAMPLE #	LOCATION/DESCRIPTION	MATERIAL CONSTRUCTION	SAMPLING METHOD	RESULT
	Room 3026:			
	Door to Room 3026A, white	M	XRF	6.7
	Door casing to Room 3026A, white	M	XRF	5.9

FLOOR: THIRD **CATEGORY: 4.03**

BULK SAMPLE #	LOCATION/DESCRIPTION	MATERIAL CONSTRUCTION	SAMPLING METHOD	RESULT
	Rooms 2040-2053:			
	Squash court ceilings, off white		XRF	2.0

FLOOR: THIRD **CATEGORY: 4.04**

BULK SAMPLE #	LOCATION/DESCRIPTION	MATERIAL CONSTRUCTION	SAMPLING METHOD	RESULT
	Room 3035:			
	Door, tan/cream	M	XRF	9.4
	Room 3036:			
	Door, tan/cream	M	XRF	10.5

	Hallway 3040:			
	Walls, white		XRF	1.3
	Walls, white		XRF	1.5
	Walls, white		XRF	1.7
B-54	Hand rails, black	M	AA	5.933%
	Window casing to main squash gallery		XRF	2.5

FLOOR: THIRD **CATEGORY: 4.05**

BULK SAMPLE #	LOCATION/DESCRIPTION	MATERIAL CONSTRUCTION	SAMPLING METHOD	RESULT
None Detected				

FLOOR: THIRD **CATEGORY: 5.01**

BULK SAMPLE #	LOCATION/DESCRIPTION	MATERIAL CONSTRUCTION	SAMPLING METHOD	RESULT
	Rooms 3001, 3002, 3007, 3009:			
	Wall Room 3001, white	C	XRF	2.8
	Ceiling, white		XRF	2.0
	Mens Room 3003:			
	Ceiling, white		XRF	1.9
	Wall, white	C	XRF	2.7
	Rooms 3004, 3005, 3006:			
	Mechanical room walls, green		XRF	2.0
	Mechanical room ceiling, green		XRF	1.7
	Mechanical room door (2), green	M	XRF	1.9
	Mechanical room door casings (2), green	M	XRF	2.0
	Room 3012:			
	Wall, white	C	XRF	2.8
(B-60)	Window sill, black		AA	0.371%
	Window sash, black	M	XRF	2.1
	Window mullions, black	M	XRF	2.0
	Ceiling, white		XRF	1.5
	Room 3013:			
	Wall, white	C	XRF	2.8
(B-60)	Window sill, black	W	AA	0.371%
	Window sash, black	M	XRF	2.1
	Window mullions, black	M	XRF	2.0
	Ceiling, white		XRF	1.5
	Room 3014:			
	Wall, white	C	XRF	2.7
B-60	Window sill, black	W	AA	0.371%
	Window sash, black	M	XRF	2.1
	Window mullions, black	M	XRF	2.0
	Ceiling, white		XRF	1.5
	Room 3008:			
	Wall (upper only) , white		XRF	1.9
	Ceiling, white		XRF	2.0

FLOOR: THIRD **CATEGORY: UNASSIGNED**

BULK SAMPLE #	LOCATION/DESCRIPTION	MATERIAL CONSTRUCTION	SAMPLING METHOD	RESULT
	Room 3016:			
	Mechanical Room ceiling white		XRF	1.8
	Room 3028:			
	Wall, gray	B	XRF	15.4
	Room 3037:			
	Door, tan/cream	M	XRF	10.0
	Room 3038:			
	Door Room 3038, tan/cream	M	XRF	9.7

FLOOR: FOURTH **CATEGORY: 1.01**

BULK SAMPLE #	LOCATION/DESCRIPTION	MATERIAL CONSTRUCTION	SAMPLING METHOD	RESULT
	Stairwell S9:			
	Stair stringer (inside), black	M	XRF	5.1
	Stair stringer (outside), white	M	XRF	2.9
	Stair riser, black	M	XRF	5.0
	Stair hand rail, black	M	XRF	2.8
	Underside of stairs, white	M	XRF	2.0
	Door, tan/cream	M	XRF	6.0
	Stairwell S10:			
	Stair riser, black	M	XRF	6.3
	Stair stringer, black	M	XRF	5.9
	Stair hand rail, black	M	XRF	7.6
	Window sash, black	M	XRF	4.9
	Window sill, black	M	XRF	4.5
	Window mullions, black	M	XRF	4.0
	Stairwell S14:			
	Stair riser, black	M	XRF	6.2
	Stair stringer, black	M	XRF	6.0
	Stair railings, black	M	XRF	6.9
	Hallway 4056:			
	Window sills (2), black		XRF	6.6
	Window sashes (2), black		XRF	6.8
	Window mullions (2, black		XRF	6.9

Hallway 4023:			
Doors (11) to Rooms 4024, 4025 4026, 4027, 4028. Stairwell S9, tan/cream	M	XRF	6.0
Room 4005:			
Exterior sash, white	M	XRF	3.2
Exterior mullions, white	M	XRF	2.9
Room 4006:			
Door, tan/cream	M	XRF	2.7
Ceiling, white		XRF	6.9
Stairwell S7:			
Stair riser, black	M	XRF	4.2
Stair stringer (inside), black	M	XRF	4.2
Stair stringer (outside), white	M	XRF	3.1
Stair baluster, black	M	XRF	4.2
Stairwell S5 (down):			
Walls, yellow	C	XRF	18.9
Risers, black	M	XRF	20.1
Stringers, black	M	XRF	20.1
Hallway 4009:			
Wall, yellow	C	XRF	3.0
Window sashes (3), yellow		XRF	2.6
Window mullions (3), yellow		XRF	3.1
Room 4011:			
Mechanical room wall, yellow	C	XRF	3.0
Ceiling, white	C	XRF	6.0
Floor, gray	C	XRF	1.5
Stairwell S46:			
Stair riser, brown	M	XRF	18.0
Stair stringer, brown	M	XRF	18.2
Ceiling, white	C	XRF	11.8
Room 4010:			
Wall, yellow	C	XRF	1.5
Wall, yellow	C	XRF	1.5

FLOOR: FOURTH **CATEGORY: 3.06**

BULK SAMPLE #	LOCATION/DESCRIPTION	MATERIAL CONSTRUCTION	SAMPLING METHOD	RESULT
None Detected				

FLOOR: FOURTH **CATEGORY: 4.02**

BULK SAMPLE #	LOCATION/DESCRIPTION	MATERIAL CONSTRUCTION	SAMPLING METHOD	RESULT
	Room 4015:			
	Wall, white		XRF	1.3
	Room 4016:			
	Wall, white		XRF	1.3
	Room 4018:			
	Wall, white		XRF	1.3
	Room 4022:			
	Wall, white		XRF	1.3

FLOOR: FOURTH **CATEGORY: 4.03**

BULK SAMPLE #	LOCATION/DESCRIPTION	MATERIAL CONSTRUCTION	SAMPLING METHOD	RESULT
	Room 4029:			
	Door, tan/cream	M	XRF	6.2
	Room 4030:			
	Door, tan/cream	M	XRF	6.9
	Room 4031:			
	Door, tan/cream	M	XRF	7.0
	Hallway 4033:			
	Door to Room 4047, tan/cream	M	XRF	6.2
	Door to Room 4035, tan/cream	M	XRF	6.9
	Room 4045:			
	Perimeter floor I-beam, red	M	XRF	2.1
	Stairwell S48:			
	Door, tan/cream	M	XRF	6.6

FLOOR: FOURTH **CATEGORY: 4.04**

BULK SAMPLE #	LOCATION/DESCRIPTION	MATERIAL CONSTRUCTION	SAMPLING METHOD	RESULT
	Room 4024:			
	Exterior window sash, white	M	XRF	2.9
	Exterior window mullions, white	M	XRF	3.1
	Interior doors (3), black	M	XRF	6.5
	Doors (3), tan/cream	M	XRF	6.5

Room 4025:			
Doors (3), tan/cream	M	XRF	6.2
Exterior window components, sashes, white	M	XRF	2.9
Exterior window components, mullions, white	M	XRF	3.0
Room 4026:			
Door to Hallway 4023, tan/cream	M	XRF	2.1
Room 4027:			
Door, tan/cream	M	XRF	7.0
Exterior window sash, white	M	XRF	2.9
Exterior window mullions, white	M	XRF	3.1
Door tan/cream	M	XRF	6.1
Room 4028:			
Door, tan/cream	M	XRF	6.7
Window sash exterior, white	M	XRF	2.9
Window sill exterior, white	M	XRF	3.0

FLOOR: FOURTH **CATEGORY: 4.05**

BULK SAMPLE #	LOCATION/DESCRIPTION	MATERIAL CONSTRUCTION	SAMPLING METHOD	RESULT
None Detected				

FLOOR: FOURTH **CATEGORY: UNASSIGNED**

ULK AMPLE #	LOCATION/DESCRIPTION	MATERIAL CONSTRUCTION	SAMPLING METHOD	RESULT
	Room 4012:			
	Wall, off-white		XRF	16.3
	Window sash by Room 4012A, white		XRF	2.1
	Window mullion by Room 4012A, white		XRF	1.9

FLOOR: FIFTH **CATEGORY: 1.01**

BULK SAMPLE #	LOCATION/DESCRIPTION	MATERIAL CONSTRUCTION	SAMPLING METHOD	RESULT
	Room 5002:			
	Door to Stairwell S9, tan/cream	M	XRF	6.2
	Room 5004:			
	Door, tan/cream	M	XRF	6.8
	Door to Room 5002, tan/cream	M	XRF	6.0
	(Note: Windows are unaccesible due to window bars)			

	Stairwell S10:			
	Stair stringer, black	M	XRF	6.3
	Stair riser, black	M	XRF	5.9
	Stair hand rail, black	M	XRF	7.2
	Window sills (2), black		XRF	6.2
	Window sashes (2), black		XRF	5.9
	Window mullions (2), black		XRF	4.7
	Stairwell S9:			
	Stair riser, black	M	XRF	1.7
	Stair stringer (outside), white	M	XRF	3.0
	Stair stringer (inside), black	M	XRF	2.3
	Stair hand rail and balusters, black	M	XRF	3.1

FLOOR: FIFTH **CATEGORY: 4.02**

BULK SAMPLE #	LOCATION/DESCRIPTION	MATERIAL CONSTRUCTION	SAMPLING METHOD	RESULT
None Detected				

FLOOR: FIFTH **CATEGORY: 4.03**

BULK SAMPLE #	LOCATION/DESCRIPTION	MATERIAL CONSTRUCTION	SAMPLING METHOD	RESULT
	Room 5005:			
	Door to Stairwell S9, tan/cream	M	XRF	6.8
	Door to Room 5003, tan/cream	M	XRF	6.5
	Room 5006:			
	Interior door, cream	M	XRF	6.0
	Interior door casing, cream	M	XRF	6.0
	Window sash, black	M	XRF	2.2
	Window mullions, black	M	XRF	2.2
	Room 5007:			
	Door to Stairwell S10, tan/cream	M	XRF	8.9

FLOOR: FIFTH **CATEGORY: UNASSIGNED**

BULK SAMPLE #	LOCATION/DESCRIPTION	MATERIAL CONSTRUCTION	SAMPLING METHOD	RESULT
	Room 5010:			
	Doors tan/cream	M	XRF	7.8
	Doors, tan/cream	M	XRF	14.8
	Doors, tan/cream	M	XRF	12.0
(B-80)	Floor, gray	C	AA	0.457%
	Door casings (2), white	M	XRF	2.0

	Room 5011:			
	Window sill, gray	M	XRF	1.4
B-80	Floor, gray	C	AA	0.457%
B-81	Exterior window sash, white	M	AA	1.736%
(B-81)	Exterior window mullions, white	M	AA	1.736%
B-82	Duct, gray	M	AA	0.418%
B-83	Ceiling, white	C	XRF	18.819

FLOOR: SIXTH **CATEGORY: 1.01**

BULK SAMPLE #	LOCATION/DESCRIPTION	MATERIAL CONSTRUCTION	SAMPLING METHOD	RESULT
	Stairwell S9:			
	Stair riser, black	M	XRF	1.7
	Stair stringer (outside), white	M	XRF	3.0
	Stair stringer (inside), black	M	XRF	2.3
	Stair hand rail and balusters, black	M	XRF	3.1
	Room 6001:			
	Doors (2) from Room 6001 to 6004, tan/cream	M	XRF	2.0
	Room 6002:			
	Door, tan/cream	M	XRF	2.1
	Room 6003:			
	Doors (2) to Room 6001, tan/cream	M	XRF	2.0
	Stairwell S10:			
	Stair stringer, black	M	XRF	6.3
	Stair riser, black	M	XRF	5.9
	Stair hand rail, black	M	XRF	7.2
	Window sills (2), black		XRF	6.2
	Window sashes (2), black		XRF	5.9
	Window mullions (2), black		XRF	4.7

FLOOR: SIXTH **CATEGORY: 3.07**

BULK SAMPLE #	LOCATION/DESCRIPTION	MATERIAL CONSTRUCTION	SAMPLING METHOD	RESULT
	Room 6004:			
	Door to Stairwell S10, tan/cream	M	XRF	2.1
	Structural steel throughout, cream	M	XRF	11.0
	Baseboard, black		XRF	12.6
	Room 6005:			
	Door, brown	M	XRF	2.3
	Room 6006:			
	Door, brown	M	XRF	2.1
	Room 6007:			
	Door, brown	M	XRF	2.3
	Room 6008:			
	Doors (2), brown	M	XRF	1.9

FLOOR: SIXTH **CATEGORY: UNASSIGNED**

V. INSPECTION RESULTS

FLOOR: BASEMENT **CATEGORY: 1.01**

BULK SAMPLE #	LOCATION/DESCRIPTION	MATERIAL CONSTRUCTION	SAMPLING METHOD	RESULT
	Foyer to Male Cadet Lockers, 0044:			
	Black metal partition screen and poles, black	M	XRF[1]	0.0
	Stairwell risers, Stairwell S6, black	M	XRF	2.1
	Ceiling, white	C	XRF	1.2
B-3	Ceiling, white	C	AA[2]	0.076%[3]
	Door casing next to Elevator E2, black	M	XRF	0.0
	Door casing to janitor closet #34, Room 0045, black	M	XRF	0.0
	Interior door to janitor closet #34, Room 0045, tan/cream	M	XRF	10.5
	Exterior door to janitor closet #34, Room 0045, tan/cream	M	XRF	10.5
	Door to Women Cadet Lockers #35, Stairwell S33, brown	M	XRF	0.0
	Door Casing to Women Cadet Lockers #35, Stairwell S33, brown	M	XRF	0.0
	Elevator E2 door, brown	M	XRF	0.0
	Elevator E2 door casing, brown	M	XRF	0.0
	Door to Room 0029A, tan/cream	M	XRF	0.0
	Door casing and jamb to Room 0029A, black	M	XRF	0.0
	Ceiling, Room 0029A, white	C	XRF	0.0
	Door to Central Gym Mechanical Room #31, tan/cream	M	XRF	0.0
	Door casing to Central Gym Mechanical Room #31, tan/cream	M	XRF	0.0
	Door to Room 0029 by Stairwell S31, white	M	XRF	0.0
	Maintenance Office in West Gym, Room 0046A:			
	Lower one-half walls, gray	B	XRF	0.0
	Upper one-half walls, white	B	XRF	0.0
	Door, light gray	M	XRF	0.0
	Door Casing, light gray	M	XRF	0.0
	Room 0029B:			
	Door, tan/cream	M	XRF	0.0
	Door casing, tan/cream	M	XRF	0.0
	Stairwell S33 :			
	Wall, white		XRF	0.0
	Door, brown	M	XRF	0.0
	Door casing, brown	M	XRF	0.0

[1]XRF = X-Ray Fluorescence Analyzer results in milligrams of lead per square centimeter
[2]AA = Atomic Absorption Method SW846
[3]% = Percent Lead
Material Construction: B=block or brick; C=concrete; M=metal; G=gypsum, wallboard or sheetrock; P=plaster; W=wood

FLOOR: BASEMENT **CATEGORY: 1.02**

BULK SAMPLE #	LOCATION/DESCRIPTION	MATERIAL CONSTRUCTION	SAMPLING METHOD	RESULT

	Hallway 0022:			
	Wall, white	C	XRF	1.1
	Wall, white	C	XRF	1.1
	Ceiling, white	C	XRF	1.1
	Ceiling, white	C	XRF	1.1
B-10	Wall, white		AA	0.060%
	Room 0033:			
	Walls, white		XRF	1.4
	Walls, white		XRF	1.4
	Wall, white		XRF	1.5
	Door to Room 0034, gray	M	XRF	0.3
	Door casing to Room 0038, gray	M	XRF	0.3
B-12	Door and door casing to Room 0034, gray	M	AA	0.250%
	Exterior entrance door, white	M	XRF	11.7
	Interior entrance door, green	M	XRF	11.7
	Ceiling, white	C	XRF	1.4
	Room 0034:			
	Walls and ceiling, white	C	XRF	1.4
	Room 0035:			
	Walls and ceiling, white	C	XRF	1.4
	Walls and ceiling, white	C	XRF	1.5
	Elevator E1			
	door, gray	M	XRF	0.0
	interior wall, gray	M	XRF	0.0
	Room 0008:			
B-14	Ceiling, white	C	AA	0.048%
B-15	Electrical conduit, white	M	AA	0.059%
B-16	Radiator, tan/cream	M	AA	0.181%
	Room 0007:			
	Exterior entrance door, gray	M	XRF	0.0
	Exterior entrance door casing, gray	M	XRF	0.0
	Interior entrance door, brown	M	XRF	0.0
	Interior entrance door casing, brown	M	XRF	0.0
	Concrete wall, yellow	C	XRF	3.9
	Concrete wall, gray	C	XRF	2.0
	Ceiling, white	C	XRF	1.0

FLOOR: BASEMENT **CATEGORY: 2.01**

BULK SAMPLE #	LOCATION/DESCRIPTION	MATERIAL CONSTRUCTION	SAMPLING METHOD	RESULT
	Hallway door casing from Room 0064 to 0073 hall, tan	M	XRF	0.0
	Room 0071:			
	Column, white	M	XRF	2.5
	Insulated duct work, gray		XRF	0.0
	Stairwell S12:			
	Column, red	M	XRF	5.0
	Stair riser, black	M	XRF	2.6
	Stair stringer, black	M	XRF	2.4
	Stair hand rail, black	M	XRF	2.6
	Ceiling, white	M	XRF	0.0
	Door casing, gray	M	XRF	0.0
	Room 0087:			
	Door casing, tan	M	XRF	0.0
	Ceiling, white	C	XRF	0.0
	Room 0088:			
	Door casing to hall 0085, tan	M	XRF	0.0
	Room 0089:			
	Ceiling, white	C	XRF	0.0
	Room 0090:			
	Ceiling, white	C	XRF	0.0
	Door casing to Stairwell S24, tan	M	XRF	0.0
	Room 0091:			
	Ceiling, white		XRF	0.0
	Door casing to Stairwell S24, tan	M	XRF	0.0
	Room 0092:			
	Ceiling, white	C	XRF	0.0
	Room 0093:			
	Ceiling, white	C	XRF	0.0
	Room 0094:			
	Door casing to hall 0085, tan	M	XRF	0.0

	Stairwell S24			
	Stair riser, black	M	XRF	2.2
	Stair stringer, black	M	XRF	2.4
	Stair tread, gray	C	XRF	0.6
	Stair tread, gray	C	XRF	0.6
	Stair tread, gray	C	XRF	1.0
B-91	Stair tread, gray	C	AA	0.013%
	Ceilng, white	C	XRF	0.0
	Room 0095:			
	Wall, one-half, tan	B	XRF	0.8
	Ceiling, white		XRF	0.0
	Stairwell S23			
	Stair riser, black	M	XRF	2.4
	Stair stringer, black	M	XRF	2.5
	Stair hand rail, black	M	XRF	2.5
	Room 0065:			
	Door casing, tan	M	XRF	0.0
	Stairwell S11			
	Stair riser, black	M	XRF	2.5
	Stair stringer, black	M	XRF	2.3
	Stair hand rail, black	M	XRF	2.6
	Walls, tan	B	XRF	0.8
	Room 0067:			
	Door casing to hall 0073, tan	M	XRF	0.0
	Room 0068:			
	Ceiling, white		XRF	0.0
	Room 0069:			
	Ceiling, white		XRF	0.0
	Room 0070:			
	Ceiling, white		XRF	0.0
	Stairwell S22			
	Stair riser, black	M	XRF	2.3
	Stair stringer, black	M	XRF	2.4
	Stair hand rail, black	M	XRF	2.1
	Stair tread, gray	C	XRF	0.6
	Door, black	M	XRF	0.0
	Ceiling, white	C	XRF	0.0
	Room 0072:			
	Door casing, tan	M	XRF	0.0
(B-90)	Ceiling, tan		AA	0.090%
(B-90)	Walls, tan	B	AA	0.090%

FLOOR: BASEMENT **CATEGORY: 2.07**

BULK SAMPLE #	LOCATION/DESCRIPTION	MATERIAL CONSTRUCTION	SAMPLING METHOD	RESULT
	West Gym Mechanical Room 0046:			
	Column bases, gray	C	XRF	1.4
	Platform bases, black	C	XRF	1.9
	Pedestals for water tanks, cream	B	XRF	4.5
	Pedestals for large gate valves	B	XRF	4.3
	Lower perimeter wall, light gray/dark gray	C	XRF	1.3
B-1	Lower perimeter wall, light gray/dark gray	C	AA	0.198%
	Chlorine storage room, exterior block wall, light gray	B	XRF	0.0
	Chlorine storage room, interior block wall, dark gray	B	XRF	1.7
	Lower perimeter wall, light gray/dark gray	C	XRF	1.7
	Interior door casing to hall/Male Cadet Locker room, black	M	XRF	11.5
	Interior door to hall/Male Cadet Locker Room, light gray	M	XRF	0.0
	Exterior door to hall/Male Cadet Lockers, tan/cream	M	XRF	0.0
	Water filtration unit, blue	M	XRF	0.0
	HVAC ducting "Exhaust No. 36", gray	M	XRF	1.6
B-2	Large gate valves, black	M	AA	0.473%
	Interior door to Women Cadet Lockers, tan/cream	M	XRF	5.3
	Water tanks (2), gray		XRF	0.0
	Interior door casing to Women Cadet Lockers, black	M	XRF	0.0
	Stairs to Women Cadet Lockers, gray	M	XRF	3.0
	Stair railings to Women Cadet Lockers, white	M	XRF	3.5
	HVAC ducting, white	M	XRF	0.0
	Central Gym Mechanical Room (0030, 0031, 0031A, 1110, 0063, 0062, 0061, 0059):			
	Floor and baseboard, Room 0030, gray	C	XRF	0.8
	Floor and baseboard, Room 0031, gray	C	XRF	0.9
B-4	Floor and baseboard, Room 0031, gray	C	AA	0.016%
	Wall, Room 0030, white		XRF	0.6
	Wall, Room 0031, white		XRF	0.7
	Wall, Room 1110,white		XRF	0.8
B-5	Wall, Room 0031, white		AA	<0.004%
B-6	Wall, Room 1110, white		AA	<0.005%
	Electrical panels/boxes Rooms 0031, 0031A, green/gray	M	XRF	0.0
	Central Gym Mechanical Room Sub-Basement:			
	Floor, gray	C	XRF	1.1
B-7	Floor, gray	C	AA	0.180%
	Door to Chlorine Room, gray	M	XRF	0.0
	Door casing to Chlorine Room, gray	M	XRF	0.0
	Walls (all), white	C/P	XRF	7.5
	Walls (all), white	C/P	XRF	8.7
	Walls (all), white	C/P	XRF	9.8
	Columns (all), white	B	XRF	6.0
	Columns (all), white	B	XRF	7.0
	Columns (all), white	B	XRF	8.0
	"VSC Filter" unit, blue	M	XRF	0.0
	Platforms for circulation pumps associated with VSC filter, black	C	XRF	1.2
B-8	Platform for VSC Filter unit, black	C	AA	0.025%
	Pully safety guard, yellow	M	XRF	0.0
	Railing to sump area, yellow	M	XRF	0.0

	Room 0073:			
	Wall, tan	B	XRF	0.8
	Wall, tan	B	XRF	0.3
	Wall, tan	B	XRF	1.0
B-85	Wall, tan	C	AA	0.070%
	Wall, tan	B	XRF	0.8
	Wall, tan	B	XRF	0.3
	Wall, tan	B	XRF	1.0
	Door to Elevator E4, brown	M	XRF	0.0
	Door casing to Elevator E4, brown	M	XRF	0.0
	Door casing to Room 0075, tan	M	XRF	0.0
	Room 0074:			
	Door, gray	M	XRF	0.0
	Door casing, tan	M	XRF	0.0
	Ceiling, brown	C	XRF	0.8
	Ceiling, brown	C	XRF	1.0
B-86	Ceiling, brown	C	AA	0.061%
	Room 0075:			
	Wall, tan	B	XRF	0.8
	Wall, tan	B	XRF	0.6
	Wall, tan	C	XRF	0.6
	Wall, tan	C	XRF	1.2
	Wall, tan	C	XRF	1.5
B-87	Wall, tan	C	AA	0.049%
B-88	Wall, tan	C	AA	0.090%
B-89	Wall, tan	C	AA	0.090%
	Piping, blue		XRF	0.0
	Piping, green		XRF	0.0
	Piping, red		XRF	2.8
	Ceiling, white	C	XRF	1.0
B-90	Ceiling, whtie	C	AA	0.034%
	Room 0081:			
	Filter units, blue	M	XRF	0.0
	Filter unit base, gray	C	XRF	0.0
	Filter unit base, black	C	XRF	0.0
	Piping, black		XRF	0.0
	Ceiling, white	C	XRF	0.0
	Room 0083:			
	Ceiling, white	C	XRF	0.0
	Door, gray	M	XRF	0.0
	Door casing, gray	M	XRF	0.0
(B-90)	Ceiling, white	C	AA	0.034%

FLOOR: BASEMENT **CATEGORY: 3.01**

BULK SAMPLE #	LOCATION/DESCRIPTION	MATERIAL CONSTRUCTION	SAMPLING METHOD	RESULT
	Room 0028			
	HVAC ducting, white	M	XRF	0.0
	Door casing, white	M	XRF	0.0
	Ceiling, white	C	XRF	0.0
	Door, white	M	XRF	0.0
	Male Cadet Lockers, Room 0009:			
	Door casing, white	M	XRF	0.0
	Ceiling , white	C	XRF	0.0
	Door, white	M	XRF	0.0
	Swinging doors, white	M	XRF	0.0
	Swinging door casings, white	M	XRF	0.0
	Lockers, yellow	M	XRF	0.0
	Lockers, black	M	XRF	0.0
	Lockers, white	M	XRF	0.0
	Columns, tan/cream	C	XRF	1.5
	Columns, tan/cream	C	XRF	1.8
	Columns, tan/cream	C	XRF	2.0
	Locker window components, tan/cream	M	XRF	0.0
	Double swinging doors and casing by Elevator E1	M	XRF	0.0
	Double swinging doors and casing to Room 0010	M	XRF	0.0
	Male Cadet Showers, Rooms 0012-0021:			
	Ceiling, white	P	XRF	2.0
	False wall, white		XRF	0.0
	Swinging doors, white	M	XRF	0.0
	Swinging door casings, white	M	XRF	0.0
	Hallway 0026:			
	Door, white	M	XRF	0.0
	Door casing, white	M	XRF	0.0
	Brick wall at Stairwell S32 to male lockers, white	B	XRF	0.7
B-9	Brick wall at Stairwell S32 to male lockers, white	B	AA	0.090%
	Room 0023:			
	Door to 0026, tan/cream	M	XRF	0.0
	Door casing to 0026, tan/cream	M	XRF	0.0
	Door to Stairwell S21, tan	M	XRF	0.0
	Door casing to Stairwell 21, tan	M	XRF	0.0
	Room 0024:			
	Door casing, gray	M	XRF	0.0
	Room 0025:			
	Ceiling, white		XRF	0.0
	Wall, tan	B	XRF	0.0

	Stairwell S21:			
	Stair hand rail, black	M	XRF	0.9
	Stair riser, black	M	XRF	0.9
	Stair stringer, black	M	XRF	0.9
	Door to Room 0022, brown	M	XRF	0.0
	Door casing to Room 0022, brown	M	XRF	0.0

FLOOR: BASEMENT **CATEGORY: 4.04**

BULK SAMPLE #	LOCATION/DESCRIPTION	MATERIAL CONSTRUCTION	SAMPLING METHOD	RESULT
	Room 0050:			
B-99	Ramp wall to Women Cadet Locker Room, yellow	B	AA	0.005%
	Room 0050A:			
	Wall , bright yellow	B	XRF	1.1

FLOOR: BASEMENT **CATEGORY: UNASSIGNED**

BULK SAMPLE #	LOCATION/DESCRIPTION	MATERIAL CONSTRUCTION	SAMPLING METHOD	RESULT
	Room 0048:			
	Door, brown	M	XRF	0.0
	Door casing, brown	M	XRF	0.0
	Hallway 0036:			
	Upper one-half stone wall, white		XRF	1.2
	Lower one-half stone wall, gray		XRF	11.0
	Lower one-half stone wall, green		XRF	1.6
	Wood partition wall, white	W	XRF	0.0
	Rear door, brown	M	XRF	0.0
	Rear door casing, brown	M	XRF	0.0
	Room 0036A:			
	Door, brown	M	XRF	0.0
	Door casing, brown	M	XRF	0.0
	Lower 7/8 stone wall, green/white		XRF	1.1
	Lower 7/8 stone wall, green/white		XRF	1.1
	Upper 1/8 stone wall, white		XRF	1.0
	Upper 1/8 stone wall, white		XRF	1.0
B-11	Lower 7/8 stone wall, green/white, composite		AA	0.027%
(B-11)	Upper 1/8 stone wall, green/white, composite		AA	0.027%
	Floor, gray	C	XRF	1.0
	Room 0037:			
	Lower one-half brick/block, gray	B	XRF	18.3
	Stone wall, green		XRF	1.6
	Stone wall, white		XRF	1.5
	HVAC Unit No. 4, dark gray	M	XRF	0.0
	Door to Room 0038, gray	M	XRF	0.0
	Door casing to Room 0038, gray	M	XRF	0.0
	Upper wall to Room 0038, white	C	XRF	0.0
	Room 0038:			
	Wall, gray	B	XRF	18.3
	Stone perimeter wall, green		XRF	12.6
	Door casing to transformer Room, light gray	M	XRF	2.0

	Door to transformer Room, light gray	M	XRF	0.0
	Ski Room 0001, 0002:			
	Perimeter columns, lower half, brown	C	XRF	1.4
	Perimeter walls, white	C	XRF	0.8
	Perimeter walls, white	C	XRF	0.6
	Perimeter walls, white	C	XRF	1.1
	Perimeter walls, white	C	XRF	1.0
	Columns, white	C	XRF	0.8
	Columns, white	C	XRF	0.7
	Columns, white	C	XRF	0.6
B-13	Columns and walls, white	C	AA	0.018%
	Hatch door to Room 0005, black	M	XRF	0.0
	Entrance door, gray	M	XRF	0.0
	Entrance door casing, gray	M	XRF	0.0
	Stairwell S18 to Room 0001, gray	M	XRF	0.0
	Stairwell S18 stair rail to Room 0001, gray	M	XRF	0.0
	Room 0052A:			
B-100	Wall (tile), bright yellow		AA	<0.005%
	Door casings, black	M	XRF	0.0
	Window sash, black	M	XRF	0.0
	Window mullions, black	M	XRF	0.0
	Room 0053:			
(B-100)	Wall (tile), bright yellow		AA	<0.005%
	Door casings, black	M	XRF	0.0
	Window sash, black	M	XRF	0.0
	Window mullions, black	M	XRF	0.0
	Walls (tile), white		XRF	1.0
	Window sash, black	M	XRF	0.0
	Window mullions, black	M	XRF	0.0
B-101	Wall, white	B	AA	<0.004%
	Room 0054:			
	Door to Room 0057, yellow		XRF	16.8
	Door casing to Room 0057, black		XRF	2.0
(B-100)	Walls (tile), bright yellow		AA	<0.005%
	Window sash, black	M	XRF	0.0
	Window mullions, black	M	XRF	0.0
(B-100)	Wall (tile), yellow		AA	<0.005%
	Room 0055:			
(B-100)	Wall, yellow		AA	<0.005%
	Room 0056:			
(B-100)	Wall, yellow		AA	<0.005%
	Room 0057:			
(B-100)	Walls, bright yellow		AA	<0.005%
	Room 0058:			
	Door, yellow	M	XRF	3.2
	Door casing, black	M	XRF	0.0
	Stairwell S9:			
	Stair riser, black	M	XRF	4.8
	Stair stringer (inside), black	M	XRF	4.8

	Stair stringer (outside), white	M	XRF	4.8
	Stair hand rail, black	M	XRF	4.8
	Door casing, black	M	XRF	0.0

FLOOR: FIRST **CATEGORY: 1.01**

BULK SAMPLE #	LOCATION/DESCRIPTION	MATERIAL CONSTRUCTION	SAMPLING METHOD	RESULT
	Hall 1038:			
	Ceiling, yellow		XRF	5.5
	Bathroom 1039:			
	Wall upper one-half, white		XRF	1.4
	Ceiling, white		XRF	1.5
	Stairwell S5:			
	Floor, gray	C	XRF	2.0
	Stair riser and stringers, black	M	XRF	11.5
	Walls, yellow	B	XRF	0.8
	Walls, yellow	B	XRF	0.9
	Walls, yellow	B	XRF	1.0
	Walls, yellow	P	XRF	1.1
B-25	Wall, yellow	P	AA	0.103%
	Door to Stairwell S5, brown	M	XRF	0.0
	Door casing Stairwell S5, brown	M	XRF	0.0
	Room 1057:			
(B-25)	Walls, yellow	B	AA	0.103%
	Room 1069:			
	Door casing, brown	W	XRF	0.0
	Room 1070:			
	Door, brown	M	XRF	0.0
	Door casing, brown	M	XRF	0.0
	Rooms 1071:			
	Wall, yellow	B	XRF	0.0

	Hallway 1086:			
	Walls, yellow	B	XRF	0.8
	Walls, yellow	B	XRF	1.1
	Walls, yellow	B	XRF	1.0
B-27	Walls, yellow	B	AA	<0.003%
B-28	Walls, yellow	B	AA	<0.004%
	Door casing to Room 1087, brown		XRF	0.0
	Swinging door to Rooms 1071, 1072, brown	M	XRF	0.0
	Swinging door casings to Rooms 1071, 1072, brown	M	XRF	0.0
	Door to Room 1087, brown	M	XRF	0.0
	Hallway 1086A:			
B-29	Walls, yellow	B	AA	<0.004%
B-30	Walls, yellow	B	AA	0.004%
	Stairwell S6:			
	Stair stringer, brown	M	XRF	0.0
	Stair riser, brown	M	XRF	0.0
	Room 1083:			
	Ceiling Room 1083, white	P	XRF	0.0
	Stairwell S8:			
	Stair riser, brown	M	XRF	0.0
	Stair stringer, brown	M	XRF	0.0
	Stair hand railing, brown	M	XRF	0.0
	Stairwell S7:			
	Stair stringer (outside), white	M	XRF	3.0
	Stair stringer (inside), black	M	XRF	0.0
	Stair riser, black	M	XRF	0.1
	Stair hand rail, black	M	XRF	0.0
	Elevator E2:			
	Door, brown	M	XRF	0.0
B-37	Radiator outside Elevator E2 and stairs at Stairwell S41, tan/cream	M	AA	8.222%
	Room 1109:			
	Ceiling, white	C	XRF	2.3
	Hallway 1032:			
	Upper wall, yellow	B	XRF	1.7
	Upper wall, yellow	B	XRF	1.5
	Door to outside, brown	M	XRF	0.0
	Door casing to outside, brown	M	XRF	0.0
	Ceiling, white	C	XRF	0.7
	Ceiling, white	C	XRF	0.7
	Ceiling, white	C	XRF	1.1
B-38	Ceiling, white	C	AA	<0.003%

FLOOR: FIRST **CATEGORY: 1.02**

BULK SAMPLE #	LOCATION/DESCRIPTION	MATERIAL CONSTRUCTION	SAMPLING METHOD	RESULT
	Foyer 1041:			
	Faux baseboard, black	B	XRF	0.0
	Swinging doors, brown	M	XRF	0.0
	Panels next to swinging doors, brown	W	XRF	0.0
	Main entrance door, brown	W	XRF	0.0
B-17	Radiator, silver	M	AA	0.778%
	Elevator E1			
	doors, light gray	M	XRF	0.0
	Hall 1040:			
	Wall, yellow	B	XRF	5.5
	Wall, yellow	B	XRF	5.3
	Stairwell S3 faux baseboard, black	B	XRF	0.0
	Faux baseboard, black	B	XRF	0.0
	Hallway to Weight Rooms 1048, 1054:			
	Wall, black	B	XRF	2.0
	Wall, white	B	XRF	1.1
	Wall, white	B	XRF	1.0
	Wall, white	B	XRF	0.8
	Baseboard, gray		XRF	0.8
	Baseboard, gray		XRF	1.1
	HVAC ducting, black	M	XRF	0.0
B-22	Wall, white	B	AA	0.079%
B-23	Baseboard, gray	B	AA	0.043%
	Main Entrance to Rooms 1048, 1054 by Stairwell S21:			
	Lower one-half wall, white		XRF	0.5
	Upper one-half wall, cream		XRF	0.8
B-24	Lower one-half wall, white		AA	<0.009%
	Main Entrance to Rooms 1048, 1054 by Stairwell S21:			
	Lower one-half wall, white		XRF	0.5
	Upper one-half wall, cream		XRF	0.8
B-24	Lower one-half wall, white		AA	<0.009%
	Elevator E3			
	door, dark brown	M	XRF	0.0
	Stairwell S4:			
	Walls, white		XRF	10.9
	Window sash, black		XRF	6.3
	Window sill, black		XRF	6.0
	Window mullions, black		XRF	6.0

	Entrance to Female Cadet Lockers, Stairwell S21:			
	Walls, blue	B	XRF	0.5
	Walls, blue	B	XRF	0.9
	Walls, blue	B	XRF	1.0
B-31	Walls, blue	B	AA	0.091%
B-32	Walls, blue	B	AA	0.097%
	Stair hand rail, black	M	XRF	0.9
	Stair riser, black	M	XRF	0.9
	Stair stringer, black	M	XRF	0.9
B-33	Stair hand rail, black	M	AA	3.098%
	Stairwell S1:			
	wall, yellow	B	XRF	4.5
	Room 1036:			
	Wall and ceiling, white	C	XRF	4.0
	Rooms 1003 and 1004:			
	Office baseboard, black	W	XRF	2.1
	Office walls, white	P	XRF	1.7
	Office ceiling, white	C	XRF	1.7
	Office mullions, white	M	XRF	1.7
	Room 1001:			
	Front foyer ceiling, white	P	XRF	4.5
	Room 1002:			
	Front foyer decorative ceiling, tan/brown	P	XRF	2.1
	Room 1006:			
	Beam and ceiling paint, white	M/C	XRF	4.5
	Room 1007:			
	Office ceiling, white		XRF	5.3

FLOOR: FIRST **CATEGORY: 2.02**

BULK SAMPLE #	LOCATION/DESCRIPTION	MATERIAL CONSTRUCTION	SAMPLING METHOD	RESULT
	Stairwell S11:			
	Stair riser, black	M	XRF	2.5
	Stair stringer, black	M	XRF	2.3
	Stair hand rail, black	M	XRF	2.6
	Support beams, tan	C	XRF	5.0
(B-85)	Walls, tan	B	AA	0.070%
	Room 1114:			
	Ceiling, white		XRF	0.0
	Room 1115:			
	Ceiling, white		XRF	0.0
	Door casing, tan	M	XRF	0.0
	Room 1116:			
	Ceiling, white		XRF	0.0
	Room 1117A:			

	Door to outside, brown	M	XRF	0.0
	Door casing to outside, tan	M	XRF	0.0
	Door casing to 1117, tan	M	XRF	0.0
B-92	Wall, tan	B	AA	0.035%
	Room 1117:			
	Ceiling (rear of lockers), white	P	XRF	0.7
B-93	Ceiling (rear of lockers), white	P	AA	0.072%
	Stairwell S22:			
	Stair riser, black	M	XRF	2.3
	Stair stringer, black	M	XRF	2.4
	Stair hand rail, black	M	XRF	2.1
	Stair tread, gray		XRF	0.6
	Door casing, tan	M	XRF	0.0
	Room 1118:			
	Door casing to hallway 1111, tan	M	XRF	0.0
	Door to pool, black	M	XRF	0.0
	Ceiling, white		XRF	0.0
	Stairwell S23:			
	Stair riser, black	M	XRF	2.4
	Stair stringer, black	M	XRF	2.5
	Stair hand rail, black	M	XRF	2.5
	Door casing, tan	M	XRF	0.0
	Room 1112:			
	Door casing, tan	M	XRF	0.0
	Room 1120:			
	Door casing, tan	M	XRF	0.0
	Ceiling, white		XRF	0.0
	Door to pool, black	M	XRF	0.0
	Room 1121:			
	Door casing to hallway 1111, brown	M	XRF	0.0
	Door casing to Room 1122, brown	M	XRF	0.0
	Door to outside, brown	M	XRF	0.0
	Room 1123:			
(B-93)	Ceiling (rear of lockers), white	P	AA	0.072%
	Room 1124:			
	Ceiling, white	C	XRF	0.0

	Room 1125:			
	Ceiling, white	C	XRF	0.0
B-94	Wall to Room 1128, tan	B	AA	<0.003%
	Room 1126:			
	Ceiling, white	C	XRF	0.0
	Door to Stairwell S24, black	M	XRF	0.0
	Stairwell S24:			
	Stair riser, black	M	XRF	2.2
	Stair stringer, black	M	XRF	2.4
	Stair tread finish, gray		XRF	0.6
	Stair tread finish, gray		XRF	0.6
	Stair tread finish, gray		XRF	1.0
	Room 1129:			
	Door, black	M	XRF	0.0
	Ceiling, white	C	XRF	0.0
	Room 1130:			
	Door, black	M	XRF	0.0
	Ceiling, white	C	XRF	0.0
	Room 1131:			
	Doors (2), black	M	XRF	0.0
	Ceiling, white	C	XRF	0.0
(B-85)	Wall (rear), tan	B	AA	0.070%
	Room 1132:			
	Door casing to pool, black	M	XRF	0.0
	Door casing to 1133, tan	M	XRF	0.0
	Ceiling, white	P	XRF	0.0
	Room 1133:			
	Ceiling, white		XRF	0.0
	Door casing to 1135, tan	M	XRF	0.0
	Room 1134:			
	Ceiling, white		XRF	0.0
	Room 1135:			
	Ceiling, white		XRF	0.0
	Door casings (3), tan	M	XRF	0.0
	Room 1136:			
	Door casing to Stairwell S12, tan	M	XRF	0.0
	Door to outside, brown	M	XRF	0.0
	Stairwell S12:			
	Stair riser, black	M	XRF	2.4
	Stair stringer, black	M	XRF	2.4
	Stair hand rail, black	M	XRF	2.6
	Room 1119:			
	Door to outside, black	M	XRF	0.0
	Diving board supports, tan		XRF	0.0

FLOOR: FIRST **CATEGORY: 2.04**

BULK SAMPLE #	LOCATION/DESCRIPTION	MATERIAL CONSTRUCTION	SAMPLING METHOD	RESULT
	Room 1008:			
	Walls, white	C	XRF	6.3
	Ceiling, white		XRF	2.3

FLOOR: FIRST **CATEGORY: 2.06**

BULK SAMPLE #	LOCATION/DESCRIPTION	MATERIAL CONSTRUCTION	SAMPLING METHOD	RESULT
	Room 1105A:			
	Door, tan/cream	M	XRF	7.0
	Door casing, black	M	XRF	0.0
	Instructional Pool Room 1087:			
	Wall, black	B	XRF	0.0
	Wall, tan	B	XRF	0.0
	Exterior door components, brown	M	XRF	0.0
	Side door components, brown	M	XRF	0.0
	Side door components, black	M	XRF	0.0
	Men's Lockers Room 1098:			
	Entrance doors by Stairwell S41, gray	M	XRF	16.0
	Entrance door casing by Stairwell S41, gray	M	XRF	16.0
	Window sash, brown	W	XRF	0.0
	Window mullions, brown	W	XRF	0.0
B-34	Radiator, tan/cream	M	AA	8.327%
	Walls, yellow	B	XRF	0.5
	Walls, yellow	B	XRF	0.6
	Walls, yellow	B	XRF	0.7
	Walls, yellow	B	XRF	0.8
	Walls, yellow	B	XRF	0.9
	Walls, yellow	B	XRF	1.0
B-35	Walls, yellow	B	AA	0.257%
	Locker room floor, gray	C	XRF	0.8
	Locker room floor, gray	C	XRF	0.9
	Locker room floor, gray	C	XRF	1.0
	Locker room floor, gray	C	XRF	1.1
	Door to Room 1094, gray	M	XRF	0.0
	Door casing to Room 1094, gray	M	XRF	0.0
	Room 1098E:			
	Walls, dark yellow	B	XRF	2.0

	Room 1098F:			
	Door, gray	M	XRF	2.0
	Door casing, gray	M	XRF	2.0
	Room 1099:			
	Door, yellow	M	XRF	2.0
	Door casing, black	M	XRF	2.0
	Room 1100:			
	Door, yellow	M	XRF	2.0
	Door casing, black	M	XRF	2.0
B-36	Shower room ceiling, white	P	AA	0.026%
	Room 1092:			
	Window casings, black	M	XRF	0.0
	Door, tan/cream	M	XRF	6.7
	Door casing, black	M	XRF	0.0
	Room 1094:			
	Door to Room 1097, tan/cream	M	XRF	9.5
	Door casing to Room 1097, black	M	XRF	0.0
	Ceiling and upper wall, white		XRF	0.0
	Door to Room 1096, tan/cream	M	XRF	9.5
	Door casing to Room 1096, black	M	XRF	0.0
	Doors to Room 1095 and Stairwell S9, tan/cream	M	XRF	9.5
	Door casing to Room 1095 and Stairwell S9, black	M	XRF	0.0
	Ceiling and upper wall, white		XRF	0.0
	Room 1096:			
	Window components, black		XRF	0.0
	Room 1097:			
	Door to Room 1096 tan/cream	M	XRF	9.5
	Door casing to Room 1096, black	M	XRF	0.0
	Window casings, black	M	XRF	0.0
	Room 1088:			
	Doors (2), tan/cream	M	XRF	9.5
	Door casings (2), black	M	XRF	0.0
	Room 1091:			
	Door, tan/cream	M	XRF	9.5
	Door casing, black	M	XRF	0.0
	Room 1090:			
	Door, tan/cream	M	XRF	9.5
	Door casing, black	M	XRF	0.0
	Room 1093:			
	Door, tan/cream	M	XRF	9.5
	Door casing, black	M	XRF	0.0

	Room 1089:				
	Door, tan/cream	M	XRF	9.5	
	Door casing, black	M	XRF	0.0	
	Stairwell S9:				
	Stair riser, black	M	XRF	1.7	
	Stair stringer (outside), white	M	XRF	3.0	
	Stair stringer (inside), black	M	XRF	2.3	
	Stair hand rail and balusters, black	M	XRF	3.1	
		M	XRF	3.1	

FLOOR: FIRST **CATEGORY: 3.02**

BULK SAMPLE #	LOCATION/DESCRIPTION	MATERIAL CONSTRUCTION	SAMPLING METHOD	RESULT
	Boxing Gym 1047:			
	Entrance door, brown	W	XRF	0.0
	Entrance door casing, brown	W	XRF	0.0
(B-18)	Steel beams, white	M	AA	10.644%
(B-21)	Plaster ceiling, white	C	AA	0.017%
	Faux baseboard, black	C	XRF	0.0
	Hall 1042:			
(B-18)	Steel beams, white	M	AA	10.644%
(B-21)	Ceiling, white	C	AA	0.017%
	Boxing Gym 1044:			
B-18	Steel beam, white	M	AA	10.644%
B-19	Steel beam, white	M	AA	9.332%
B-20	Steel beam, white	M	AA	9.655%
	Window sill, black	W	XRF	0.0
	Window casing, black	W	XRF	0.0
	Window sill, black	W	XRF	0.0
	Window casing, black	W	XRF	0.0
	Window mullion, black	W	XRF	0.4
	Window mullion, black	W	XRF	0.3
	Windows to hallway, brown	W	XRF	0.0
B-21	Ceiling, white	C	AA	0.017%
	Faux baseboard	C	XRF	0.0
	Door to Room 1045	M	XRF	0.0
	Door casing to Room 1045	M	XRF	0.0
	Weight Rooms 1048, 1054:			
	Lower one-half wall, white	B	XRF	0.5
	Lower one-half wall, white	B	XRF	0.9
	Lower one-half wall, white	B	XRF	1.1
	Upper one-half wall, cream	B	XRF	0.5
	Upper one-half wall, cream	B	XRF	0.9
	Upper one-half wall, cream	B	XRF	1.1
	Baseboard, gray	B	XRF	0.8
	Window sash, white	B	XRF	2.0
B-24A	Lower one-half wall, white	B	AA	0.009%
	Office wall, white	G	XRF	0.0
	Office wall, white	G	XRF	0.1
	Office wall, white	G	XRF	0.3
	Supply room walls, white	G	XRF	0.0
	Supply room walls, white	G	XRF	0.1
	Supply room walls, white	G	XRF	0.3
(B-18)	Steel beams, white	M	AA	10.644%

(B-21)	Ceiling, white Arch door frames, gray	C	AA XRF	0.017% 0.8

FLOOR: FIRST **CATEGORY: 5.01**

BULK SAMPLE #	LOCATION/DESCRIPTION	MATERIAL CONSTRUCTION	SAMPLING METHOD	RESULT
	Room 1008:			
	Walls, white	C	XRF	6.3
	Ceiling, white		XRF	2.3
	Room 1010:			
	Office wall, white	C	XRF	6.3
	Door casing, brown	M	XRF	0.0
	Wall, white	G	XRF	0.0
	Window casing, white	W	XRF	0.0
	Room 1011:			
	Door casing, brown	M	XRF	0.0
	Wall, white	G	XRF	0.0
	Room 1012:			
	Door casing, brown	M	XRF	0.0
	Wall, white	G	XRF	0.0
	Room 1013:			
	Wall, white	G	XRF	0.0
	Room 1014:			
	Wall, white	G	XRF	0.0
	Room 1015:			
	Wall, white	G	XRF	0.0
	Room 1016:			
	Door casing, brown	M	XRF	0.0
	Wall, white	G	XRF	0.0
	Room 1017:			
	Door casing, brown	M	XRF	0.0
	Wall, white	G	XRF	0.0
	Room 1018:			
	Hallway wall, yellow	G	XRF	0.0
	Room 1019:			
	Hallway wall, yellow	G	XRF	0.0
	Room 1020:			
	Door casing, brown	M	XRF	0.0
	Wall, white	G	XRF	0.0
	Room 1020A:			
	Wall, White	G	XRF	0.0
	Room 1021:			
	Wall, White	G	XRF	0.0

Room 1022:			
Wall, white	C	XRF	4.9
Wall, white	G	XRF	0.0
Room 1024:			
Door casing, brown	M	XRF	0.0
Wall, white	C	XRF	6.2
Wall, white	G	XRF	0.0
Wall, beige	G	XRF	0.0
Wall, white	G	XRF	0.0
Wall, white	C	XRF	6.0
Column, white	G	XRF	0.0
Room 1025:			
Door casing, brown	M	XRF	0.0
Wall, white	C	XRF	5.3
Room 1026:			
Wall, yellow	C	XRF	4.5
Hallway wall, yellow	G	XRF	0.0
Hallway wall, yellow	C	XRF	6.2
Hallway fire hose door, red	M	XRF	0.0
Room 1027:			
Door casing, brown	M	XRF	0.0
Column, white	G	XRF	0.0
Wall, white	G	XRF	0.0
Room 1028:			
Door casing, brown	M	XRF	0.0
Wall, white	G	XRF	0.0
Room 1029:			
Door casing, brown	M	XRF	0.0
Projection booth wall, yellow	C	XRF	4.6
Ramp wall, white	C	XRF	0.0
Ramp window casing, brown	W	XRF	0.0
Wall, white	C	XRF	5.7
Room 1030:			
Door casing, brown	M	XRF	0.0
Wall, white	G	XRF	0.0
Wall, white	G	XRF	4.6
Room 1031:			
Office wall, white	C	XRF	5.9
Wall, white	G	XRF	0.0
Room 1033:			
Columns, white		XRF	1.5
Wall, white	B	XRF	1.4
Room 1035:			
Wall, white	B	XRF	1.3
Wall, white	B	XRF	1.4
Wall, white	B	XRF	1.3
Door casing, brown	W	XRF	0.0

FLOOR: FIRST

CATEGORY: 5.02

BULK SAMPLE #	LOCATION/DESCRIPTION	MATERIAL CONSTRUCTION	SAMPLING METHOD	RESULT
	Hallway 1068:			
	Walls, yellow	B	XRF	16.0
	Walls, yellow	B	XRF	15.3
	Room 1059:			
	Door casing, black	M	XRF	0.0
	Room 1060:			
	Door casing to Room 1059, brown		XRF	0.0
	Bath walls, yellow	B	XRF	1.8
	Bath door casing, brown	W	XRF	0.0
	Room 1061:			
	Door casings, brown	W	XRF	0.0
	Weight Room 1062:			
	Door to Room 1061, white	M	XRF	0.0
	Inside of exterior door, white		XRF	0.0
	Walls, upper one-half, white		XRF	0.0
	Ceiling, white		XRF	0.0
	Door casing to Room 1064, tan/cream	M	XRF	2.0
	Door to Room 1064, tan/cream	W	XRF	0.0
	Room 1064:			
	Exterior door casing, tan/cream	W	XRF	2.0
	Exterior door, tan/cream	W	XRF	0.0
	Door to Room 1065, tan/cream	W	XRF	0.0
	Door casing to Room 1065, tan/cream	M	XRF	2.0
	Door from Room 1064 to Room 1066, tan/cream	W	XRF	0.0
	Door casing to Room 1064, tan/cream	M	XRF	2.0
	Room 1065:			
	Wall, gray	P	XRF	1.8
	Room 1066A:			
	Wall, tan/cream	P	XRF	1.0
B-26	Wall, tan/cream		AA	0.008%
	Ceiling, tan/cream	P	XRF	0.0
	Room 1066:			
(B-26)	Wall, tan/cream		AA	0.008%
	Door to Room 1077, tan/cream	W	XRF	0.0
	Door casing to Room 1067, tan/cream	M	XRF	2.0
	Locker Room 1072:			
	Door, brown	M	XRF	0.0
	Door casing, brown	M	XRF	0.0
	Door, brown	M	XRF	0.0
	Door casing, brown	M	XRF	0.0
	Door, brown	M	XRF	0.0
	Door casing, brown	M	XRF	0.0
	Toilet stall partitions Room 1079, yellow	M	XRF	0.0
	Door to Room 1083, brown	M	XRF	0.0
	Door casing to Room 1083, brown	M	XRF	0.0

BULK SAMPLE #	LOCATION/DESCRIPTION	MATERIAL CONSTRUCTION	SAMPLING METHOD	RESULT
	Room 1084:			
	Door, brown	M	XRF	0.0
	Door casing, brown	M	XRF	0.0
	Room 1085:			
	Door, brown	M	XRF	0.0
	Door casing, brown	M	XRF	0.0

FLOOR: FIRST (ACROSS STREET) **CATEGORY: UNASSIGNED**

BULK SAMPLE #	LOCATION/DESCRIPTION	MATERIAL CONSTRUCTION	SAMPLING METHOD	RESULT
	Room 1034A:			
	Ceiling, white		XRF	1.4
	Window sash, brown		XRF	1.7
	Window sill, brown		XRF	1.7
	Window mullions, brown		XRF	1.7
	Room 1141, 1137:			
	Lower wall, gray		XRF	1.5
	Upper wall, white		XRF	1.5
B-98	Lower wall, gray		AA	0.091%
	Ceiling, white	C	XRF	0.0
	Column, white		XRF	1.4
	Room 1137:			
	Door to Room 1138, gray	M	XRF	0.0
	Door casing to Room 1138, black	M	XRF	0.0
	Door casing to Room 1140, gray	M	XRF	0.0

	Room 1138:			
	Door to Room 1139, gray	M	XRF	0.0
	Door casing to Room 1139, gray	M	XRF	0.0
	Room 1142:			
	Doors (2) to Room 1141, gray	M	XRF	0.0
	Doors (2) casing to Room 1141, gray	M	XRF	0.0
	Room 1045:			
	Exterior door, black	M	XRF	10.5
	Exterior door casing, black	M	XRF	10.4
	Column, white		XRF	1.5
	Wall, white		XRF	1.5
	Floor, gray	C	XRF	1.5
	Floor, gray	C	XRF	1.5
	Room 1044:			
	Wall, white		XRF	1.5

FLOOR: SECOND **CATEGORY: 1.01**

BULK SAMPLE #	LOCATION/DESCRIPTION	MATERIAL CONSTRUCTION	SAMPLING METHOD	RESULT
	Elevator E2:			
	Doors, brown	M	XRF	0.0
	Hallway 2027:			
	Hallway coat racks, black	W	XRF	0.0
	Hallway 2021:			
	Hallway wooden benches outside Room 2012, brown	W	XRF	0.0
	Door to Hayes Gym Room 2012, white	M	XRF	3.2
	Door casing to Hayes Gym Room 2012, black	M	XRF	1.0
B-39	Door casing to Hayes Gym Room 2012, black	M	AA	0.106%
	Door casing by Elevator E2, brown	M	XRF	0.0
	Hallway 2014:			
	Walls, yellow	C/P	XRF	4.0
	Door to gym Room 2015, brown	M	XRF	0.0
	Door casing to gym Room 2015, brown	M	XRF	0.0
	Window components, brown		XRF	0.7
	Window components, brown		XRF	0.8
	Window components, brown		XRF	0.9
B-40	Window components, brown		AA	0.720%
	Room 2016:			
	Door to 2015, brown	M	XRF	0.0
	Door casing to 2015, brown	M	XRF	0.0
	Ceiling, white		XRF	0.0

	Hallway 2018:			
(B-39)	Door casing to Hayes Gym, black	M	AA	0.106%
	Walls, yellow	B	XRF	1.1
	Walls, yellow	B	XRF	1.3
	Walls, yellow	B	XRF	1.0
	Ceiling, white		XRF	0.0
B-41	Wall, yellow	B	AA	0.013%
	Stairwell S5:			
	Wall, yellow	B	XRF	19.0
	Door, brown	M	XRF	0.0
	Door casing, brown	M	XRF	0.0
	Stairwell S6:			
	Stair riser, brown	M	XRF	0.0
	Stair stringer, brown	M	XRF	0.0
	Stair baluster, brown	M	XRF	0.0
	Stairwell S7:			
	Stair stringer (outside), white	M	XRF	3.0
	Stair stringer (inside), black	M	XRF	0.0
	Stair riser, black	M	XRF	0.1
	Stair hand rail, black	M	XRF	0.0
	Hallway 2020:			
B-42	Radiator, second floor landing, tan/cream	M	AA	0.295%
	Stairwell S8:			
	Stair stringer (outside), brown	M	XRF	0.0
	Stair stringer (inside), brown	M	XRF	0.0
	Stair riser, brown	M	XRF	0.0
	Stair hand rail, brown	M	XRF	0.0
	Hallway 2027:			
	Door to Room 2058, tan/cream	M	XRF	10.0
	Door casing (2 doors) to Room 2058, black	M	XRF	0.0
	Door to stairs at Stairwell S9, tan/cream	M	XRF	10.3
	Door casing to stairs at Stairwell S9, black	M	XRF	0.0
	Ceiling, white		XRF	0.0
	Stairwell S9:			
	Stair stringer (inside), black	M	XRF	5.1
	Stair stringer (outside), white	M	XRF	2.9
	Stair riser, black	M	XRF	5.0
	Stair hand rail, black	M	XRF	2.8
	Underside of stairs, white	M	XRF	2.0
	Door, tan/cream	M	XRF	9.5
	Door casing, black	M	XRF	0.0

	Hallway 2029:			
	Ceiling, white		XRF	0.0
	Door to hall Room 2033, tan/cream	M	XRF	10.3
	Door casing to hall Room 2033, black	M	XRF	0.0
	Door to Room 2030, tan/cream	M	XRF	9.3
	Hallway 2050:			
	Wall, white		XRF	0.7
	Wall, white		XRF	0.9
	Door to Stairwell S13, brown	M	XRF	4.3
	Door casing to Stairwell S13, brown	M	XRF	4.3
(B-49)	Wall, white		AA	<0.003%
(B-49)	Ceiling, white		AA	<0.003%
	Baseboard, brown	P	XRF	0.0
	Door to Room 2062, brown	M	XRF	0.0
	Door casing to Room 2062, brown	M	XRF	0.0
	Door to closet under Stairwell S14, black	M	XRF	0.0
	Door casing to closet under Stairwell S14, black	M	XRF	0.0
	Stairwell S14:			
	Stair riser, black	M	XRF	2.4
	Stair stringer, black	M	XRF	2.8
	Stair hand rail and baluster, black	M	XRF	2.9
	Hallway 2059:			
	Window mullions, black	M	XRF	0.0
	Window sash, black	M	XRF	0.0
	Window sill, black	M	XRF	0.0
	Exterior window components , white	M	XRF	2.6
	Ceiling, white	M	XRF	0.0
	Room 2060:			
	Door, tan/cream	M	XRF	0.0
	Door casing, black	M	XRF	0.0
	Room 2061:			
	Door, tan/cream	M	XRF	0.0
	Door casing, tan/cream	M	XRF	0.0

FLOOR: SECOND **CATEGORY: 1.02**

BULK SAMPLE #	LOCATION/DESCRIPTION	MATERIAL CONSTRUCTION	SAMPLING METHOD	RESULT
	Hallway 2011:			
(B-39)	Door casings to Hayes Gym, black	M	AA	0.106%

	Hallway 2013:			
(B-39)	Door casings to Hayes Gym, black	M	XRF	0.106%
	Elevator E3 doors, dark brown	M	XRF	0.0
	Window sill, black	W	XRF	13.5
	Window sash, black	W	XRF	12.9
	Window mullions, black	W	XRF	11.9
	Window casing, black	W	XRF	13.5
	Door frame to Room 2012, yellow	C	XRF	21.9
	Room 2001:			
	Window sash, yellow		XRF	3.0
	Window mullions, yellow		XRF	3.2
	Room 2003:			
	Window sill, brown		XRF	0.0
	Window sash, brown		XRF	0.0
	Window mullions, brown		XRF	0.0
	Wall, white	P	XRF	4.0
	Baseboards, brown	W	XRF	2.0
	Room 2004:			
	Walls, white	P	XRF	4.0
	Window sills, brown		XRF	2.0
	Window sash, brown		XRF	2.0
	Window mullions, brown		XRF	2.0
	Baseboard, brown	W	XRF	2.1
	Hallway 2006:			
	Wall, yellow	P	XRF	4.2
	Ceiling		XRF	2.0
	Room 2007:			
	Door casing, white	M	XRF	3.1
	Wall, yellow	P	XRF	3.7
	Ceiling		XRF	2.0
	Stairwell S1:			
	Wall, yellow	P	XRF	3.7
	Stairwell S2:			
	Wall, yellow	P	XRF	3.7
	Elevator E1:			
	Doors, light gray	M	XRF	0.0
	Room 2011:			
	Window sill, brown		XRF	0.0
	Window sash, brown		XRF	0.0
	Stairwell S3:			
	Stair riser, black	M	XRF	11.1
	Stair stringer, black	M	XRF	10.9
	Stair baluster, black	M	XRF	11.5

FLOOR: SECOND **CATEGORY: 2.03**

BULK SAMPLE #	LOCATION/DESCRIPTION	MATERIAL CONSTRUCTION	SAMPLING METHOD	RESULT

	Stairwell S12:			
	Window sashes (2), black	M	XRF	0.0
	Window mullions, black	M	XRF	0.0
	Window casing, gray	M	XRF	0.0
	Door casing to Room 2070, tan	M	XRF	0.0
	Window sashes, black	M	XRF	0.0
	Window mullions, black	M	XRF	0.0
	Window casings, gray	M	XRF	0.0
	Room 2067:			
	Bleacher paint, white	C	AA	0.230%
	Door casings (2), tan	M	XRF	0.0
	Room 2068:			
(B-95)	Bleacher paint, white	C	AA	0.230%
B-96	Door casings (2), tan	M	AA	0.199%
	Room 2070:			
B-95	Bleacher paint (from concrete), white	C	AA	0.230%
B-95A	Bleacher paint (from HVAC duct), white	M	AA	0.061%
	Window sashes (12), black	M	XRF	0.0
	Window mullions (12), black	M	XRF	0.0
	Window casings (12), gray	M	XRF	0.0
	Room 2071:			
	Door casings (2), tan	M	XRF	0.0
	Room 2073:			
	Door casings (2), tan	M	XRF	0.0
(B-95)	Bleacher paint	C	AA	0.061%
	Stairwell S11:			
	Door casing, tan	M	XRF	0.0
	Stair riser, black	M	XRF	2.4
	Stai stringer, black	M	XRF	2.6
	Stair hand rail, black	M	XRF	2.6
(B-85)	Wall, tan	B	AA	0.070%

FLOOR: SECOND **CATEGORY: 3.03**

BULK SAMPLE #	LOCATION/DESCRIPTION	MATERIAL CONSTRUCTION	SAMPLING METHOD	RESULT
	Hayes Gym 2012:			
	Window sills, black	W	XRF	1.9
	Window trim, black	W	XRF	1.8
	Window mullions, black	W	XRF	1.9
	Window sashes, black	W	XRF	2.0
	Underside of elevated track, stained	W	XRF	0.0
	Support beams for elevated track, white	M	XRF	21.3
	Support columns for elevated track, white	M	XRF	20.9
	Pipes for training, climbing, etc., black	M	XRF	0.0

FLOOR: SECOND **CATEGORY: 3.04**

BULK SAMPLE #	LOCATION/DESCRIPTION	MATERIAL CONSTRUCTION	SAMPLING METHOD	RESULT
	Gym 2062:			

	Interior side of door to Room 2050, tan/cream	M	XRF	0.0
	Interior door casing to Room 2050, tan/cream	M	XRF	0.0
	Door casing to Room 2065 (2 doors), brown	M	XRF	0.0
	Door to Room 2059, tan/cream	M	XRF	0.0
	Door casing to Room 2059, tan/cream	M	XRF	0.0
	Room 2009:			
	Wall, white		XRF	3.1
	Ceiling, white		XRF	2.9
	Door to Room 2010, white	M	XRF	3.9
	Door casing to Room 2010, white	M	XRF	4.1
	Ceiling, white		XRF	3.9

FLOOR: SECOND **CATEGORY: 3.05**

BULK SAMPLE #	LOCATION/DESCRIPTION	MATERIAL CONSTRUCTION	SAMPLING METHOD	RESULT
	Room 2008:			
	Wall, decorative		XRF	5.1
	Door casing to Room 2009, white	M	XRF	4.2
	Ceiling, white		XRF	5.0
	Interior door, white	M	XRF	4.2
	North Gym 2065:			
	Painted tile, brown		XRF	0.8
	Painted tile, brown		XRF	0.8
	Painted tile, brown		XRF	0.9
	Painted tile, brown		XRF	0.3
	Painted tile, brown		XRF	0.4
	Painted tile, brown		XRF	0.5
B-51	Painted tile, brown		AA	0.017%
	Door casing to Hallway 2006, brown	M	XRF	4.0
	Door casing to Hallway 2006, brown	M	XRF	3.9
	Door casing to Hallway 2006, brown	M	XRF	3.6
B-52	Painted tile, brown		AA	0.014%
	Room 2063:			
	Door casing to Room 2065, brown	M	XRF	6.9
	Ceiling, white	P	XRF	1.8
	Wall, white	C	XRF	1.8
	Window sashes (5), black		XRF	4.7
	Window mullions (5), black		XRF	4.5
	Window sills (5), black		XRF	4.0
	Exit door casing, brown	M	XRF	4.8
	Door to Stairwell S15, brown	M	XRF	4.0
	Door casing to Stairwell S15, brown	M	XRF	4.3
	Room 2063A:			
	Door, brown	M	XRF	3.0
	Door casing, brown	M	XRF	3.0
	Stairwell S16:			
	Stair riser, black	M	XRF	12.7
	Stair stringer, black	M	XRF	12.5
	Stair hand rail and baluster, black	M	XRF	12.3

FLOOR: SECOND **CATEGORY: 4.01**

BULK SAMPLE #	LOCATION/DESCRIPTION	MATERIAL CONSTRUCTION	SAMPLING METHOD	RESULT
	Squash Courts Hallway 2033:			
	Door casings (19), black	M	XRF	0.0
	Door casings (19), black	M	XRF	0.0
	Door casings (19), black	M	XRF	0.0
	Door casings (19), black	M	XRF	0.0
	Door casings (19), black	M	XRF	0.0
	Door casings (19), black	M	XRF	0.0
	Doors (19), white	W	XRF	0.3
	Doors (19), white	W	XRF	0.4
	Doors (19), white	W	XRF	0.5
	Doors (19), white	W	XRF	0.6
	Doors (19), white	W	XRF	0.8
	Doors (19), white	W	XRF	1.0
	Door jamb, black	W	XRF	0.7
	Door jamb, black	W	XRF	0.8
	Door jamb, black	W	XRF	0.9
	Door jamb, black	W	XRF	1.0
	Door jamb, black	W	XRF	1.1
	Door jamb, black	W	XRF	1.2
	Door threshold, black	W	XRF	0.7
	Door threshold, black	W	XRF	0.8
	Door threshold, black	W	XRF	0.9
	Door threshold, black	W	XRF	1.0
	Door threshold, black	W	XRF	1.1
	Door threshold, black	W	XRF	1.2
B-44	Door jamb, black	W	AA	0.118%
B-45	Door threshold, black	W	AA	0.134%
B-46	Door, white	W	AA	0.381%
	Walls, white	P/C/W	XRF	1.7
	Walls, white	P/C/W	XRF	1.8
	Walls, white	P/C/W	XRF	1.9
	Walls, white	P/C/W	XRF	1.4
	Walls, white	P/C/W	XRF	1.8
	Walls, white	P/C/W	XRF	2.0
	Walls, white	P/C/W	XRF	2.1
	Walls, white	P/C/W	XRF	2.2
	Walls, white	P/C/W	XRF	2.3
	Walls, white	P/C/W	XRF	2.4
	Ceiling by stairs Stairwell S56, light gray	P	XRF	0.0
	Door to Room 2038, white	M	XRF	0.0
	Door casing to Room 2038, white	M	XRF	0.0
	Stairwell S28:			
	Door to Room 2050, tan/cream	M	XRF	8.0
	Door casing to Room 2050, black	M	XRF	0.0
	Door at top of stairs, gray	M	XRF	8.5
	Door casing at top of stairs, black	M	XRF	0.0

FLOOR: SECOND **CATEGORY: 4.02**

BULK SAMPLE #	LOCATION/DESCRIPTION	MATERIAL CONSTRUCTION	SAMPLING METHOD	RESULT
	Gym 2015:			
	Walls, yellow	B	XRF	0.5
	Walls, yellow	B	XRF	0.9

	Walls, yellow	B	XRF	1.0
	Columns, yellow	B	XRF	0.5
	Columns, yellow	B	XRF	0.8
	Room 2017:			
	Door, brown	M	XRF	0.0
	Door casing, brown	M	XRF	0.0

FLOOR: SECOND **CATEGORY: 4.03**

BULK SAMPLE #	LOCATION/DESCRIPTION	MATERIAL CONSTRUCTION	SAMPLING METHOD	RESULT
	Mens Room 2030:			
	Ceiling, white	C	XRF	0.0
	Door (2), tan/cream	M	XRF	9.7
	Door casing (2), black	M	XRF	0.0
	Squash Courts Hallway 2033:			
	Door casings (19), black	M	XRF	0.0
	Door casings (19), black	M	XRF	0.0
	Door casings (19), black	M	XRF	0.0
	Door casings (19), black	M	XRF	0.0
	Door casings (19), black	M	XRF	0.0
	Door casings (19), black	M	XRF	0.0
	Doors (19), white	W	XRF	0.3
	Doors (19), white	W	XRF	0.4
	Doors (19), white	W	XRF	0.5
	Doors (19), white	W	XRF	0.6
	Doors (19), white	W	XRF	0.8
	Doors (19), white	W	XRF	1.0
	Door jamb, black	W	XRF	0.7
	Door jamb, black	W	XRF	0.8
	Door jamb, black	W	XRF	0.9
	Door jamb, black	W	XRF	1.0
	Door jamb, black	W	XRF	1.1
	Door jamb, black	W	XRF	1.2
	Door threshold, black	W	XRF	0.7
	Door threshold, black	W	XRF	0.8
	Door threshold, black	W	XRF	0.9
	Door threshold, black	W	XRF	1.0
	Door threshold, black	W	XRF	1.1
	Door threshold, black	W	XRF	1.2
B-44	Door jamb, black	W	AA	0.118%
B-45	Door threshold, black	W	AA	0.134%
B-46	Door, white	W	AA	0.381%
	Walls, white	P/C/W	XRF	1.7
	Walls, white	P/C/W	XRF	1.8
	Walls, white	P/C/W	XRF	1.9
	Walls, white	P/C/W	XRF	1.4
	Walls, white	P/C/W	XRF	1.8
	Walls, white	P/C/W	XRF	2.0
	Walls, white	P/C/W	XRF	2.1
	Walls, white	P/C/W	XRF	2.2
	Walls, white	P/C/W	XRF	2.3
	Walls, white	P/C/W	XRF	2.4
	Ceiling by stairs Stairwell S56, light gray	P	XRF	0.0
	Door to Room 2038, white	M	XRF	0.0
	Door casing to Room 2038, white	M	XRF	0.0

	Stairwell S56:			
	Door, black	M	XRF	0.0
	Stairwell stringer (outside), black	M	XRF	0.0
	Stairwell stringer (inside), gray	M	XRF	0.0
	Stairwell riser, gray	M	XRF	0.0
	Underside of stairs, white	M	XRF	0.0
	Room 2038:			
	Gallery lower walls, white	B	XRF	0.0
	Gallery upper walls, white	B	XRF	0.4
	Gallery upper walls, white	B	XRF	0.1
	Gallery upper walls, white	B	XRF	1.2
B-47	Gallery upper walls, white	B	AA	0.142%
	Gallery ceiling, white	C	XRF	0.5
	Gallery ceiling, white	C	XRF	1.0
	Gallery ceiling, white	C	XRF	3.5
B-48	Gallery ceiling, white	C	AA	0.145%
	Room 2039:			
	Gallery walls, white		XRF	0.0

FLOOR: SECOND **CATEGORY: 4.04**

BULK SAMPLE #	LOCATION/DESCRIPTION	MATERIAL CONSTRUCTION	SAMPLING METHOD	RESULT
	Room 2022:			
	Door, tan/cream	M	XRF	9.7
	Room 2023:			
	Doors (2), tan/cream	M	XRF	10.7
	Room 2025:			
	Doors (2), tan/cream	M	XRF	9.7
	Room 2026:			
	Door, tan/cream	M	XRF	10.3
	Door casing, black	M	XRF	0.0
	Room 2028:			
	Doors (2 doors), brown	M	XRF	0.0
	Door casings (2 casings), brown	M	XRF	0.0
	Wall, tan	B	XRF	0.0
	Window sash, black		XRF	0.0
	Window sill, black		XRF	0.0
	Window mullions, black		XRF	0.0
	Ceiling and beams, white	C/M	XRF	0.0
	Room 2058:			
	Window mullions on perimeter windows, white	M	XRF	2.6
	Window sash on interior windows, white	M	XRF	2.6
	Window mullions on interior windows, black	M	XRF	0.0
	Window sash on interior windows, black	M	XRF	0.0
B-43	Radiator, tan/cream	M	AA	6.870%
	Ceiling and beams, white	C/M	XRF	0.2
	Ceiling and beams, white	M	XRF	0.3
	Ceiling and beams, white	M	XRF	0.5
	Doors (5), tan/cream	M	XRF	9.7

FLOOR: SECOND **CATEGORY: 4.05**

BULK SAMPLE #	LOCATION/DESCRIPTION	MATERIAL CONSTRUCTION	SAMPLING METHOD	RESULT
	Stairwell S13 and Room 2051:			
	Wall, white		XRF	1.0
B-50	Wall, white		AA	0.562%
	Room 2051A:			
	Wall, gray		XRF	2.0
	Wall, yellow		XRF	2.5
	Wall, black		XRF	3.0
	Ceiling, white		XRF	2.0
	Door to Room 2051H, black	M	XRF	2.0
	Door casing to Room 2051H, gray	M	XRF	2.1
	Room 2051B:			
	Door, brown	M	XRF	3.0
	Door casing, brown	M	XRF	2.9
	Wall, white		XRF	1.0

Closet wall, yellow		XRF	2.0
Closet ceiling, yellow		XRF	2.0
Room 2051C:			
Door, brown	M	XRF	2.7
Door casing, brown	M	XRF	2.9
(interior of room inaccessable)			
Room 2051D:			
Door, brown	M	XRF	3.1
Door casing, brown	M	XRF	2.6
(interior of room inaccessable)			
Room 2051E:			
Door, brown	M	XRF	2.2
Door casing, brown	M	XRF	2.0
Wall, off white		XRF	2.6
Ceiling, off white		XRF	2.0
Room 2051F:			
Door, brown	M	XRF	1.9
Door casing, brown	M	XRF	2.3
Wall, off white		XRF	1.7
Ceiling, off white		XRF	1.9
Room 2051G:			
Door, brown	M	XRF	2.1
Door casing, brown	M	XRF	2.2
Ceiling, off white		XRF	1.9
Wall, off white		XRF	1.7
(interior of room inaccessable)			
Room 2051H:			
Wall, white		XRF	1.5
Wall, white		XRF	1.7
Wall, white		XRF	2.2
Ceiling, off white		XRF	1.9
Room 2051J:			
Door, brown	M	XRF	2.1
Door casing, brown	M	XRF	2.3
Wall, white		XRF	1.7
Ceiling, white		XRF	1.9
Room 2051K:			
Wall, white		XRF	1.0
Mens Room 2051L:			
Door, brown	M	XRF	2.0
Door casing, brown	M	XRF	2.0
Walls, yellow		XRF	2.0
Ceiling, yellow		XRF	2.3
Stairwell S15:			
Stair stringer, mezzanine level, brown	M	XRF	3.0
Stair riser, mezzanine level, brown	M	XRF	3.5
Stair railing and baluster, mezzanine level, brown	M	XRF	3.0

	Door to Room 2063, brown	M	XRF	4.0
	Door casing to Room 2063, brown	M	XRF	4.2
	Wall, yellow	P	XRF	2.5
	Room 2064:			
	Wall, yellow	B	XRF	0.7
	Wall, yellow	B	XRF	0.9
	Wall, yellow	B	XRF	1.2
	Door to Room 2052, brown	M	XRF	0.0
	Door casing to Room 2052, brown	M	XRF	0.0
	Room 2064A:			
	Door, brown	M	XRF	0.0
	Door casing, brown	M	XRF	0.0
	Room 2052:			
	Wall, yellow	B	XRF	0.7
	Wall, yellow	B	XRF	1.0
	Wall, yellow	B	XRF	1.2
	Room 2022:			
	Doors (3), tan/cream	M	XRF	12.8
	Door casings (3), tan/cream	M	XRF	0.0
B-102	Ceiling, white		A	<0.006%
	Room 2023:			
	Doors (2), tan/cream	M	XRF	12.4
	Door casings (2), black	M	XRF	0.0
(B-102)	Ceiling, white		AA	<0.006%
	Room 2024:			
	Doors (2), tan/cream	M	XRF	12.6
	Door casings (2), black	M	XRF	0.0
	Room 2026:			
	Wall, tan	B	XRF	0.0
(B-102)	Ceiling, white	C	AA	<0.006%
	Floor, gray	C	XRF	1.5

FLOOR: THIRD **CATEGORY: 1.01**

BULK SAMPLE #	LOCATION/DESCRIPTION	MATERIAL CONSTRUCTION	SAMPLING METHOD	RESULT
	Elevator E2:			
	Doors, brown	M	XRF	0.0
	Hallway 3030:			
	Door to Room 3033, brown	M	XRF	0.0
	Door casing to Room 3033, brown	M	XRF	0.0
	Room 3031:			
	Door, tan/cream	M	XRF	0.0
	Door casing, black	M	XRF	0.0
	Ceiling, white	C	XRF	5.0
	Room 3032:			
	Ceiling, white	C	XRF	5.0
	Hallway 3034:			
	Hallway ceiling, white		XRF	1.2
	Door to Room 3033, brown	M	XRF	0.0
	Door casing to Room 3033, brown	M	XRF	0.0
	Door to Stairwell S9, tan/cream	M	XRF	9.9
	Door casing to Stairwell S9, black	M	XRF	0.0
	Door to hall Room 3039, tan/cream	M	XRF	10.3
	Door casing to Hallway 3039, black	M	XRF	0.0
	Door to Room 3036, tan/cream	M	XRF	10.3
	Stairwell S7:			
	Stair riser, black	M	XRF	4.2
	Stair stringer (inside), black	M	XRF	4.2
	Stair stringer (outside), white	M	XRF	3.1
	Stair baluster, black	M	XRF	4.2
	Stairwell S9:			
	Stair stringer (inside), black	M	XRF	5.1
	Stair stringer (outside), white	M	XRF	2.9
	Stair riser, black	M	XRF	5.0
	Stair hand rail, black	M	XRF	2.8
	Underside of stairs, white	M	XRF	2.0
	Stairwell S44:			
	Door to Room 3018, tan/cream	M	XRF	0.0
	Door casing to Room 3018, black	M	XRF	0.0
	Stairwell S10:			
	Stair riser, black	M	XRF	6.3
	Stair stringer, black	M	XRF	5.9
	Stair hand rail, black	M	XRF	7.6
	Window sash, black	M	XRF	4.9
	Window sill, black	M	XRF	4.5
	Window mullions, black	M	XRF	4.0

	Stairwell S14:			
	Stair riser, black	M	XRF	6.2
	Stair stringer, black	M	XRF	6.0
	Stair hand rail, black	M	XRF	6.9
	Stair riser, black	M	XRF	2.4
	Stair stringer, black	M	XRF	2.8
	Stair hand rail and baluster, black	M	XRF	2.9
	Hallway 3041:			
	Walls, white	M	XRF	0.8
	Walls, white	M	XRF	0.9
	Walls, white	M	XRF	1.2
	Ceiling, white	M	XRF	1.9
	Ceiling, white	M	XRF	1.9
	Baseboard, black		XRF	0.0
B-58	Wall, white	B	AA	0.136%
	Room 3042:			
	Door Room 3042, tan/cream	M	XRF	7.5
	Door casing Room 3042, black	M	XRF	0.0
	Hallway 3029:			
	Walls, yellow	B	XRF	1.2
	Stairwell S6:			
	Stair riser, brown	M	XRF	0.0
	Stair stringer, brown	M	XRF	0.0
	Stair baluster, brown	M	XRF	0.0
	Hallway 3027:			
	Door casing to Room 3018, yellow	C	XRF	12.9
	Hallway 3023:			
	Walls, yellow	C	XRF	23.9
	Window sash, brown	W	XRF	0.0
	Window sill, brown	W	XRF	0.0
	Window mullions, brown	W	XRF	0.0
	Ceiling. White	C	XRF	0.0
	Stairwell S5 (down):			
	Walls, yellow	C	XRF	18.9
	Door, brown	M	XRF	0.0
	Door casing, brown	M	XRF	0.0
	Risers, black	M	XRF	20.1
	Stringers, black	M	XRF	20.1
	Stairwell S5 (up):			
	Walls, yellow	C	XRF	18.9
	Door, brown	M	XRF	0.0
	Door casing, brown	M	XRF	0.0
	Risers, black	M	XRF	20.1
	Stringers, black	M	XRF	20.1
	Stairwell S16:			
	Stair riser, black	M	XRF	12.7
	Stair stringer, black	M	XRF	12.5
	Stair hand rail and baluster, black	M	XRF	12.3
	Ceiling, yellow		XRF	2.1

	Window sash, black	M	XRF	4.7
	Window sill, black	M	XRF	4.5
	Window mullions, black	M	XRF	4.0
	Weight Room 3033:			
	Upper wall, yellow	B	XRF	0.2
	Lower wall, gray	B	XRF	0.2
	Upper column, yellow	B	XRF	0.8
	Lower column, gray	B	XRF	0.0
	Window sash, black	M	XRF	0.0
	Window mullions, black	M	XRF	0.0
	Ceiling, white	C	XRF	1.1
	Ceiling, white	C	XRF	1.1
	Ceiling, white	C	XRF	1.2
B-53	Ceiling, white	C	AA	0.005%
	Room 3046:			
	Wall, yellow		XRF	2.0
	Ceiling, yellow		XRF	2.1

FLOOR: THIRD **CATEGORY: 1.02**

BULK SAMPLE #	LOCATION/DESCRIPTION	MATERIAL CONSTRUCTION	SAMPLING METHOD	RESULT
	Elevator E3:			
	Doors, brown	M	XRF	0.0
	Room 3019:			
	Doors (2), brown	M	XRF	0.0
	Door casings (2), brown	M	XRF	0.0
	Ceiling, white		XRF	19.9
	Room 3020:			
	Ceiling, white		XRF	19.9
	Room 3021:			
	Door casing, brown	M	XRF	0.0
	Walls Room 3021, white	B	XRF	21.9
	Ceiling Room 3021, white	C	XRF	22.6
	Room 3022:			
	Walls, white	B	XRF	23.2
	Ceiling, white	C	XRF	21.9

	Stairwell S17:			
B-59	Ceiling, white	C	AA	0.085%
	Stair riser, black	M	XRF	9.8
	Stair stringer (outside), black	M	XRF	12.6
	Stair baluster and knewll post, black	M	XRF	9.9
	Stairwell S3:			
	Stair riser, black	M	XRF	9.8
	Stair stringer, black	M	XRF	12.0
	Stair baluster, black	M	XRF	9.6
	Foyer 3015:			
	Ceiling, white		XRF	0.0
	Window sill, brown stain	W	XRF	0.0
	Window sash, brown stain	W	XRF	0.0
	Window mullions, brown stain	W	XRF	0.0
	Elevator E1:			
	Doors, gray	M	XRF	0.0
	Staiwell S1:			
	Walls, yellow	B	XRF	2.8
	Staiwell S2:			
	Walls, yellow	B	XRF	2.8

FLOOR: THIRD **CATEGORY: 2.03**

BULK SAMPLE #	LOCATION/DESCRIPTION	MATERIAL CONSTRUCTION	SAMPLING METHOD	RESULT
	Room 3044:			
	Mechanical room door to roof, brown	M	XRF	0.0
	Mechanical room door casing to roof, brown	M	XRF	0.0
	Mechanical room door casing, tan	M	XRF	0.0
	Structural steel beams, red	M	XRF	3.0
	Room 3045:			
	Door casing, tan	M	XRF	0.0
	Window sill overlooking pool, black		XRF	0.0
	Wall, white	B	XRF	0.6
	Wall, white	B	XRF	0.8
	Wall, white	B	XRF	1.0
B-97	Wall, white	B	AA	0.033%
	Bleacher railings, gray	M	XRF	0.0

FLOOR: THIRD **CATEGORY: 3.03**

BULK SAMPLE #	LOCATION/DESCRIPTION	MATERIAL CONSTRUCTION	SAMPLING METHOD	RESULT
	Room 3018:			
	Elevated track, rail, white	M	XRF	25.2
	Elevated track, structural steel, white	M	XRF	25.3

FLOOR: THIRD **CATEGORY: 4.01**

BULK SAMPLE #	LOCATION/DESCRIPTION	MATERIAL CONSTRUCTION	SAMPLING METHOD	RESULT

	Hallway 3040:			
	Floor, gray	C	XRF	1.2
	Floor, gray	C	XRF	1.2
	Floor, gray	C	XRF	1.2
	Walls, white		XRF	1.3
	Walls, white		XRF	1.5
	Walls, white		XRF	1.7
B-54	Hand rails, black	M	AA	5.933%
	Textured ceiling, white		XRF	0.0
	Textured columns, white		XRF	1.3
	Upper squash court walls, white		XRF	0.5
	Upper squash court walls, white		XRF	0.7
	Upper squash court walls, white		XRF	1.0
B-55	Upper squash court wall, white		AA	0.083%
B-56	Lower squash court wall, white		AA	0.225%
	Window casing to main squash gallery		XRF	2.5
B-57	Floor paint, gray	C	AA	0.180%
	Rooms 2039-2053:			
	Squash court ceilings, off white	C	XRF	2.0
	Stairwell S45:			
	Door to Room 3041, tan/cream	M	XRF	7.9
	Door casing to Room 3041, black	M	XRF	0.0

FLOOR: THIRD

CATEGORY: 4.02

BULK SAMPLE #	LOCATION/DESCRIPTION	MATERIAL CONSTRUCTION	SAMPLING METHOD	RESULT
	Wresting Room 3024:			
	Door from Hallway 3023, brown	M	XRF	0.0
	Door casing from Hallway 3023, brown	M	XRF	0.0
	Walls, yellow	B	XRF	0.7
	Column, yellow	B	XRF	1.2
	Room 3025:			
	Door, brown	M	XRF	0.0
	Door casing, brown	M	XRF	0.0
	Room 3026:			
	Door to Room 3024, brown	M	XRF	0.0
	Door casing to Room 3024, brown	M	XRF	0.0
	Door to Room 3026A, white	M	XRF	6.7
	Door casing to Room 3026A, white	M	XRF	5.9

BULK SAMPLE #	LOCATION/DESCRIPTION	MATERIAL CONSTRUCTION	SAMPLING METHOD	RESULT
	Stairwell S8:			
	Stair stringer (outside), brown	M	XRF	0.0
	Stair stringer (inside), brown	M	XRF	0.0
	Stair riser, brown	M	XRF	0.0
	Stair hand rail, brown	M	XRF	0.0

FLOOR: THIRD **CATEGORY: 4.03**

BULK SAMPLE #	LOCATION/DESCRIPTION	MATERIAL CONSTRUCTION	SAMPLING METHOD	RESULT
	Rooms 2040-2053:			
	Squash court ceilings, off white	C	XRF	2.0

FLOOR: THIRD **CATEGORY: 4.04**

BULK SAMPLE #	LOCATION/DESCRIPTION	MATERIAL CONSTRUCTION	SAMPLING METHOD	RESULT
	Weight Room 3033:			
	Upper wall, yellow	B	XRF	0.2
	Lower wall, gray	B	XRF	0.2
	Upper column, yellow	B	XRF	0.8
	Lower column, gray	B	XRF	0.0
	Window sash, black	M	XRF	0.0
	Window mullions, black	M	XRF	0.0
	Ceiling, white	C	XRF	1.1
	Ceiling, white	C	XRF	1.1
	Ceiling, white	C	XRF	1.2
B-53	Ceiling, white	C	AA	0.005%
	Room 3035:			
	Door, tan/cream	M	XRF	9.4
	Door casing, black	M	XRF	0.0
	Ceiling, white		XRF	1.2
	Room 3036:			
	Door, tan/cream	M	XRF	10.5
	Door casing, black	M	XRF	0.0
	Painted wall tile, yellow		XRF	0.0
	Ceiling, white	C	XRF	1.2
	Hallway 3040:			
	Floor, gray	C	XRF	1.2
	Floor, gray	C	XRF	1.2
	Floor, gray	C	XRF	1.2
	Walls, white		XRF	1.3
	Walls, white		XRF	1.5
	Walls, white		XRF	1.7
B-54	Hand rails, black	M	AA	5.933%
	Textured ceiling, white		XRF	0.0
	Textured columns, white		XRF	1.3
	Upper squash court walls, white		XRF	0.5
	Upper squash court walls, white		XRF	0.7
	Upper squash court walls, white		XRF	1.0
B-55	Upper squash court wall, white		AA	0.083%
B-56	Lower squash court wall, white		AA	0.225%
	Window casing to main squash gallery		XRF	2.5
B-57	Floor paint, gray	C	AA	0.180%

FLOOR: THIRD **CATEGORY: 4.05**

BULK SAMPLE #	LOCATION/DESCRIPTION	MATERIAL CONSTRUCTION	SAMPLING METHOD	RESULT
	Stairwell S13:			
	Door to Room 3043, brown	M	XRF	0.0
	Door casing to Room 3043, brown	M	XRF	0.0
	Stair stringer (new), brown	M	XRF	0.0
	Stair riser (new), brown	M	XRF	0.0
	Stair railing and baluster (new), brown	M	XRF	0.0
(B-79)	Wall, yellow		AA	<0.017%
	Room 3043:			
	Wall, yellow	B	XRF	0.7
	Stairwell S15:			
	Door to Room 3043, brown	M	XRF	0.0
	Door casing to Room 3043, brown	M	XRF	0.0
	Stair stringer (new), brown	M	XRF	0.0
	Stair riser (new), brown	M	XRF	0.0
	Stair railing and baluster (new), brown	M	XRF	0.0
(B-79)	Wall, yellow		AA	<0.017%

FLOOR: THIRD **CATEGORY: 5.01**

BULK SAMPLE #	LOCATION/DESCRIPTION	MATERIAL CONSTRUCTION	SAMPLING METHOD	RESULT
	Rooms 3001, 3002, 3007, 3009:			
	Wall Room 3001, white	C	XRF	2.8
	Ceiling, white		XRF	2.0
	Mens Room 3003:			
	Ceiling, white		XRF	1.9
	Wall, white	C	XRF	2.7
	Rooms 3004, 3005, 3006:			
	Mechanical room walls, green		XRF	2.0
	Mechanical room ceiling, green		XRF	1.7
	Mechanical room door (2), green	M	XRF	1.9
	Mechanical room door casings (2), green	M	XRF	2.0

	Room 3012:			
	Wall, white	C	XRF	2.8
(B-60)	Window sill, black	M	AA	0.371%
	Window sash, black	M	XRF	2.1
	Window mullions, black	M	XRF	2.0
	Ceiling, white	C	XRF	1.5
	Room 3013:			
	Wall, white	C	XRF	2.8
(B-60)	Window sill, black	W	AA	0.371%
	Window sash, black	M	XRF	2.1
	Window mullions, black	M	XRF	2.0
	Ceiling, white		XRF	1.5
	Room 3014:			
	Wall, white	C	XRF	2.7
B-60	Window sill, black	W	AA	0.371%
	Window sash, black	M	XRF	2.1
	Window mullions, black	M	XRF	2.0
	Ceiling, white		XRF	1.5
	Room 3008:			
	Wall (upper only) , white		XRF	1.9
	Ceiling, white		XRF	2.0

FLOOR: THIRD

CATEGORY: UNASSIGNED

BULK SAMPLE #	LOCATION/DESCRIPTION	MATERIAL CONSTRUCTION	SAMPLING METHOD	RESULT
	Room 3016:			
	Mechanical Room door, white	M	XRF	0.0
	Mechanical Room door casing, white	M	XRF	0.0
	Mechanical Room ceiling white		XRF	1.8
	Room 3028:			
	Wall, gray	B	XRF	15.4
	Door, brown	M	XRF	0.0
	Door casing, brown	M	XRF	0.0
	Room 3037:			
	Door, tan/cream	M	XRF	10.0
	Door casing, black	M	XRF	0.0
	Room 3038:			
	Door, tan/cream	M	XRF	9.7
	Door casing, black	M	XRF	0.0

FLOOR: FOURTH **CATEGORY: 1.01**

BULK SAMPLE #	LOCATION/DESCRIPTION	MATERIAL CONSTRUCTION	SAMPLING METHOD	RESULT
	Stairwell S9:			
	Stair stringer (inside), black	M	XRF	5.1
	Stair stringer (outside), white	M	XRF	2.9
	Stair riser, black	M	XRF	5.0
	Stair hand rail, black	M	XRF	2.8
	Underside of stairs, white	M	XRF	2.0
	Door, tan/cream	M	XRF	6.0
	Door casing, black	M	XRF	0.0
	Window mullions, black	M	XRF	0.0
	Hallway 4023:			
	Ceiling, white	C	XRF	0.3
	Ceiling, white	C	XRF	0.9
	Ceiling, white	C	XRF	1.0
B-61	Ceiling, white	C	AA	0.054%
	Doors (11) to Rooms 4024, 4025, 4026 4027, 4028, Stairwell S9, tan/cream	M	XRF	6.9
	Stairwell S10:			
	Stair riser, black	M	XRF	6.3
	Stair stringer, black	M	XRF	5.9
	Stair hand rail, black	M	XRF	7.6
	Window sash, black	M	XRF	4.9
	Window sill, black	M	XRF	4.5
	Window mullions, black	M	XRF	4.0
	Stairwell S14:			
	Stair riser, black	M	XRF	6.2
	Stair stringer, black	M	XRF	6.0
	Stair railings, black	M	XRF	6.9
	Hallway 4056:			
	Wall, off-white		XRF	0.8
	Wall, off-white		XRF	0.9
	Wall, off-white		XRF	1.1
B-65	Wall, off-white		AA	0.198%
	Ceiling, white	C	XRF	0.8
	Ceiling, white	C	XRF	0.9
	Ceiling, white	C	XRF	1.1
	Window sills (2), black		XRF	6.6
	Window sashes (2), black		XRF	6.8
	Window mullions (2, black		XRF	6.9
	Door to Room 4003, gray	M	XRF	0.0
	Door casing to Room 4003, black	M	XRF	0.0
	Room 4004:			
	Interior door, white	M	XRF	0.0
	Interior door casing, brown	M	XRF	0.0
	Exterior door, gray	M	XRF	0.0
	Room 4005:			
	Window sash, black	M	XRF	0.0
	Window mullions, black	M	XRF	0.0
	Exterior sash, white	M	XRF	3.2

	Exterior mullions, white	M	XRF	2.9
	Ceiling, white	C	XRF	0.0
	Room 4006:			
	Door, tan/cream	M	XRF	2.7
	Door casing, black	M	XRF	0.0
	Window sash , black	M	XRF	0.0
	Window mullions, black	M	XRF	0.0
	Ceiling, white	C	XRF	6.9
	Room 4007:			
	Ceiling, white	C	XRF	0.0
	Ladder to fan room, light tan/cream	M	XRF	0.0
	Door casing by ramp to Room 4003, black	M	XRF	0.0
	Elevator E2			
	Doors, brown	M	XRF	0.0
	Room 4008:			
	Walls, yellow	B	XRF	0.9
	Ceiling, white	C	XRF	0.0
	Stairwell S7:			
	Stair riser, black	M	XRF	4.2
	Stair stringer (inside), black	M	XRF	4.2
	Stair stringer (outside), white	M	XRF	3.1
	Stair baluster, black	M	XRF	4.2
	Stairwell S6:			
	Stair riser, brown	M	XRF	0.0
	Stair stringer, brown	M	XRF	0.0
	Stair baluster, brown	M	XRF	0.0
	Stairwell S5 (down):			
	Walls, yellow	C	XRF	18.9
	Door, brown	M	XRF	0.0
	Door casing, brown	M	XRF	0.0
	Risers, black	M	XRF	20.1
	Stringers, black	M	XRF	20.1
	Hallway 4009:			
	Wall, yellow	C	XRF	3.0
	Window sashes (3), yellow	W	XRF	2.6
	Window mullions (3), yellow	W	XRF	3.1
	Ceiling, white	C	XRF	0.0
	Door to Room 4014, brown	M	XRF	0.0
	Door casing to Room 4014, brown	M	XRF	0.0
B-73	Radiator, yellow	M	AA	0.089%
	Room 4011:			
	Mechanical room wall, yellow	C	XRF	3.0
	Mechanical room wall, yellow	B	XRF	0.8
	Ceiling, white	C	XRF	6.0
	Floor, gray	C	XRF	1.5
	Door, brown	M	XRF	0.0
	Door casing, brown	M	XRF	0.0
	Stairwell S46:			

Stair riser, brown	M	XRF	18.0
Stair stringer, brown	M	XRF	18.2
Ceiling, white	C	XRF	11.8
Room 4010:			
Wall, yellow	C	XRF	1.5
Wall, yellow	C	XRF	1.5
Door, brown	M	XRF	0.0
Door casing, brown	M	XRF	0.0
Room 4019:			
Door, white	M	XRF	0.0
Door casing, white	M	XRF	0.0
Ceiling, white	C	XRF	0.0
Stairwell S8:			
Stair stringer outside Stairwell S8, brown	M	XRF	0.0
Stair stringer inside Stairwell S8, brown	M	XRF	0.0
Stair riser Stairwell S8, brown	M	XRF	0.0
Stair hand rail Stairwell S8, brown	M	XRF	0.0

FLOOR: FOURTH **CATEGORY: 3.06**

BULK SAMPLE #	LOCATION/DESCRIPTION	MATERIAL CONSTRUCTION	SAMPLING METHOD	RESULT
	Room 4002:			
	Door, gray	M	XRF	0.0
	Door casing, gray	M	XRF	0.0
	Lower wall, gray		XRF	0.8
B-67	Lower wall, gray		AA	0.061%
	Upper wall, white		XRF	0.9
B-68	Upper wall, white		AA	0.059%
	Ceiling, white		XRF	1.0
B-69	Ceiling, white		AA	0.060%
	Room 4003:			
	Door to Room 4005, gray		XRF	0.0
	Room 4003A:			
	Door, red/white/blue	W	XRF	0.0
	Door casing, red/white/blue	W	XRF	0.0
	Wall exterior, red	G	XRF	0.0
	Wall exterior, white	G	XRF	0.0
	Wall exterior, blue	G	XRF	0.0
	Window casing exterior, red/white/blue	W	XRF	0.0
	Stair riser, white	W	XRF	0.0
	Stair stringer, white	W	XRF	0.0
	Stair hand rail, white	W	XRF	0.0
	Room 4003D:			
	Wall exterior, red	G	XRF	0.0
	Wall exterior, white	G	XRF	0.0
	Wall exterior, blue	G	XRF	0.0

FLOOR: FOURTH **CATEGORY: 4.02**

BULK SAMPLE #	LOCATION/DESCRIPTION	MATERIAL CONSTRUCTION	SAMPLING METHOD	RESULT

	Hallway 4014:			
	Ceiling, white	C	XRF	0.0
	Door to Room 4019, brown	M	XRF	0.0
	Door casing to Room 4019, brown	M	XRF	0.0
	Stairwell S38:			
	Stair riser, brown	M	XRF	0.0
	Stair stringer, brown	M	XRF	0.0
	Stair hand rail, brown	M	XRF	0.0
	Room 4015:			
	Door, white	M	XRF	0.0
	Door casing, white	M	XRF	0.0
	Wall, white		XRF	1.3
	Room 4016:			
	Door, white	M	XRF	0.0
	Door casing, white	M	XRF	0.0
	Wall, white		XRF	1.3
	Room 4017:			
	Door, white	M	XRF	0.0
	Door casing, white	M	XRF	0.0
B-74	Wall, white		AA	<0.009%
	Room 4018:			
	Door, white	M	XRF	0.0
	Door casing, white	M	XRF	0.0
	Wall, white		XRF	1.3
	Room 4020:			
	Door, white	M	XRF	0.0
	Door casing, white	M	XRF	0.0
	Door, brown	M	XRF	0.0
	Door casing, brown	M	XRF	0.0

	Room 4022:			
	Wall, white		XRF	1.1
	Wall, white		XRF	1.3
	Room 4014A:			
	Door, brown	M	XRF	0.0
	Door casing, brown	M	XRF	0.0

FLOOR: FOURTH **CATEGORY: 4.03**

BULK SAMPLE #	LOCATION/DESCRIPTION	MATERIAL CONSTRUCTION	SAMPLING METHOD	RESULT
	Room 4029:			
	Door, tan/cream	M	XRF	6.2
	Door casing, black	M	XRF	0.0
	Room 4030:			
	Door, tan/cream	M	XRF	6.9
	Door casing, black	M	XRF	0.0
(B-61)	Ceiling, white	C	AA	0.054%
	Room 4031:			
	Door, tan/cream	M	XRF	7.0
	Door casing, black	M	XRF	0.0
	Hallway 4033:			
(B-61)	Ceiling, white	C	AA	0.054%
	Door to Room 4047, tan/cream	M	XRF	6.2
	Door casing to Room 4047, black	M	XRF	0.0
	Door to Room 4035, tan/cream	M	XRF	6.9
	Door casing to Room 4035, black	M	XRF	0.0
	Room 4034:			
	Ceiling, white	C	XRF	0.0
	Door to outside, brown	M	XRF	0.0
	Door casing to outside, brown	M	XRF	0.0
	Room 4035:			
	Wall, yellow	B	XRF	0.0
	Wall (tile), yellow		XRF	0.0
	Wall, yellow	C	XRF	0.0
	Room 4037:			
	Door casing, brown	M	XRF	0.0
(B-62)	Wall, white		AA	<0.005%
	Room 4038:			
	Door casing, brown	M	XRF	0.0
	Room 4039:			
(B-62)	Wall, white		AA	<0.005%

	Room 4040:			
	Door casing, brown	M	XRF	0.0
	Room 4041:			
(B-62)	Wall, white		AA	<0.005%
	Room 4043:			
	Door, white	W	XRF	0.0
	Door casing, black	W	XRF	0.0
(B-62)	Wall, white		AA	<0.005%
	Door to Room 4034, brown	W	XRF	0.0
	Door casing to Room 4034, brown	W	XRF	0.0
	Room 4044:			
	Wall, white		XRF	0.6
	Wall, white		XRF	0.6
	Wall, white		XRF	0.9
B-62	Wall, white		AA	<0.005%
	Room 4045:			
	Door, brown	M	XRF	0.0
	Door casing, brown	M	XRF	0.0
	Perimeter floor I-beam, red	M	XRF	2.1
	Room 4046:			
(B-62)	Wall, white		AA	<0.005%
	Room 4047:			
	Wall, yellow	C	XRF	0.0
	Wall, yellow	B	XRF	0.0
(B-61)	Ceiling, white	C	AA	0.054%
	Ceiling, white	C	XRF	0.6
	Ceiling, white	C	XRF	0.9
	Ceiling, white	C	XRF	1.1
	Room 4048:			
	Door casing, brown	M	XRF	0.0
B-64	Wall, white		AA	0.011%
	Room 4049:			
B-63	Wall, white		AA	<0.014%
	Room 4050:			
	Door casing, brown	M	XRF	0.0
(B-63)	Wall, white		AA	<0.014%
	Room 4051:			
	Wall, white		AA	0.011%
	Room 4052:			
	Door casing, brown	M	XRF	0.0
(B-63)	Wall, white		AA	<0.014%
	Room 4053:			
(B-64)	Wall, white		AA	0.011%
	Room 4055:			
	Door, white	W	XRF	0.0

	Door casing, black	W	XRF	0.0
	Wall, white	C	XRF	0.0
	Room 4058:			
(B-63)	Wall, white		AA	<0.014%
	Room 4057:			
	Door casing, brown	M	XRF	0.0
(B-63)	Wall, white		AA	<0.014%
	Room 4059:			
	Door casing, brown	M	XRF	0.0
(B-64)	Wall, white		AA	0.011%
	Room 4060:			
(B-63)	Wall, white		AA	<0.014%
	Stairwell S48:			
	Door, tan/cream	M	XRF	6.6
	Door casing, black	M	XRF	0.0

FLOOR: FOURTH **CATEGORY: 4.04**

BULK SAMPLE #	LOCATION/DESCRIPTION	MATERIAL CONSTRUCTION	SAMPLING METHOD	RESULT
	Room 4024:			
	Lower walls, black	B	XRF	0.0
	Upper walls, gray	B	XRF	0.0
	Wall stripe, yellow	B	XRF	0.0
(B-61)	Ceiling, white	C	AA	0.054%
	Interior window sash, black	M	XRF	0.0
	Interior window mullions, black	M	XRF	0.0
	Exterior window sash, white	M	XRF	2.9
	Exterior window mullions, white	M	XRF	3.1
	Interior doors (3), black	M	XRF	6.5
	Interior door casings (3), black	M	XRF	0.0
	Doors (3), tan/cream	M	XRF	6.5
	Door casings (3), black	M	XRF	0.0
	Room 4025:			
	Doors (3), tan/cream	M	XRF	6.2
	Door casings (3), black	M	XRF	0.0
	Wall (tile), yellow		XRF	0.0
	Window sashes, black	M	XRF	0.0
	Window sashes, black	M	XRF	0.1
	Window sashes, black	M	XRF	0.2
	Window sashes, black	M	XRF	0.2
	Window mullions, black	M	XRF	0.0
	Window mullions, black	M	XRF	0.1
	Window mullions, black	M	XRF	0.2
	Window mullions, black	M	XRF	0.2
	Exterior window components, sashes, white	M	XRF	2.9
	Exterior window components, mullions, white	M	XRF	3.0
B-70	Door casing interior, red	M	AA	0.238%
(B-61)	Ceiling, white	C	AA	0.054%
	Room 4026:			
	Wall, yellow		XRF	1.1

B-72	Wall, yellow		AA	0.016%
	Door to Hallway 4023, tan/cream	M	XRF	2.1
	Door casing to Hallway 4023, black	M	XRF	0.0
	Door to Room 4025, red/yellow	M	XRF	0.0
	Door casing to Room 4025, red	M	XRF	0.0
	Ceiling, white		XRF	0.0
	Room 4027:			
	Door, tan/cream	M	XRF	7.0
	Door casing, black	M	XRF	0.0
	Lower walls, yellow	B	XRF	0.0
	Upper walls, black	B	XRF	0.0
	Ceiling, black	C	XRF	0.0
	Wall stripe, gray	B	XRF	0.0
	Window sash, black	M	XRF	0.0
	Window mullions, black	M	XRF	0.0
	Exterior window sash, white	M	XRF	2.9
	Exterior window mullions, white	M	XRF	3.1
	I-beam supports, red	M	XRF	0.0
	Door tan/cream	M	XRF	6.1
	Door casing, black	M	XRF	0.0
	Room 4028:			
	Door, tan/cream	M	XRF	6.7
	Door casing, black	M	XRF	0.0
	Walls (tile), yellow		XRF	0.0
	Window sash, black	M	XRF	0.0
	Window sill, black	M	XRF	0.0
	Window sash exterior, white	M	XRF	2.9
	Window sill exterior, white	M	XRF	3.0
	Duct, white	M	XRF	0.0
B-71	Duct, white	M	AA	0.035%
(B-61)	Ceiling, white		AA	0.054%

FLOOR: FOURTH **CATEGORY: 4.05**

BULK SAMPLE #	LOCATION/DESCRIPTION	MATERIAL CONSTRUCTION	SAMPLING METHOD	RESULT
	Room 4061:			
	Doors (2) Room 4061, brown	M	XRF	0.0
	Door casings (2) Room 4061, brown	M	XRF	0.0
	Walls Room 4061, yellow	B	XRF	0.3
	Stairwell S13:			
B-78	Walls, yellow	C	AA	<0.009%
	Stair riser, brown	M	XRF	0.0
	Stair stringer, brown	M	XRF	0.0
	Stair hand rail, brown	M	XRF	0.0
	Walls, yellow	B	XRF	0.0
	Stairwell S15:			
B-79	Walls, yellow	C	AA	<0.017%
	Stair riser, brown	M	XRF	0.0
	Stair stringer, brown	M	XRF	0.0
	Stair hand rail, brown	M	XRF	0.0
	Walls, yellow	B	XRF	0.0

FLOOR: FOURTH **CATEGORY: UNASSIGNED**

BULK SAMPLE #	LOCATION/DESCRIPTION	MATERIAL CONSTRUCTION	SAMPLING METHOD	RESULT
	Room 4012:			
	Wall, off-white		XRF	16.3
	Ceiling, white	C	XRF	0.0
	Door to Stairwell S46, off-white	M	XRF	0.0
	Door casing to Stairwell 4S6, off-white	M	XRF	0.0
	Door to Room 4013, brown	M	XRF	0.0
	Door casing to Room 4013, brown	M	XRF	0.0
	Door to Room 4012A, brown	M	XRF	0.0
	Door casing to Room 4012A, brown	M	XRF	0.0
	Window sash by Room 4012A, white		XRF	2.1
	Window mullion by Room 4012A, white		XRF	1.9

FLOOR: FIFTH **CATEGORY: 1.01**

BULK SAMPLE #	LOCATION/DESCRIPTION	MATERIAL CONSTRUCTION	SAMPLING METHOD	RESULT
	Room 5002:			
	Door to Stairwell S9, tan/cream	M	XRF	6.2
	Door casing to Stairwell S9, black	M	XRF	0.0
	Ceiling, white	C	XRF	0.9
	Room 5004:			
	Door, tan/cream	M	XRF	6.8
	Door casing, black	M	XRF	0.0
	Wall (tile), yellow		XRF	0.0
	Door to Room 5002, tan/cream	M	XRF	6.0
	Door casing to Room 5002, black	M	XRF	0.0
	Ceiling, white	C	XRF	1.0
B-76	Ceiling, white	C	AA	<0.009%
	Window bars, black	M	XRF	0.0
	(Note: Windows are unaccesible due to window bars)			
	Floor, gray	C	XRF	0.0
	Baseboard, black		XRF	0.0
	Stairwell S10:			
(B-65)	Stairwell wall, white		AA	0.198%
	Door to Stairwell S13, brown	M	XRF	0.0
	Door casing to Stairwell S13, brown	M	XRF	0.0
	Stair stringer, black	M	XRF	6.3
	Stair riser, black	M	XRF	5.9
	Stair hand rail, black	M	XRF	7.2
	Window sills (2), black	M	XRF	6.2
	Window sashes (2), black	M	XRF	5.9
	Window mullions (2), black	M	XRF	4.7
	Ceiling, white	C	XRF	0.9
B-77	Ceiling, white	C	AA	0.181%
	Stairwell S9:			
	Stair riser, black	M	XRF	1.0
	Stair riser, black	M	XRF	1.7
	Stair stringer (outside), white	M	XRF	3.0
	Stair stringer (inside), black	M	XRF	2.3
	Stair hand rail and balusters, black	M	XRF	3.1
	Window sash, black	M	XRF	0.0

Window mullions, black	M	XRF	0.0

FLOOR: FIFTH **CATEGORY: 4.02**

BULK SAMPLE #	LOCATION/DESCRIPTION	MATERIAL CONSTRUCTION	SAMPLING METHOD	RESULT
	Room 5001:			
	Ceiling, white	C	XRF	0.0
	Hand rails, brown	M	XRF	0.0
	Door to Stairwell S8, brown	M	XRF	0.0
	Door casing to Stairwell S8, brown	M	XRF	0.0
	Stairwell S28:			
	Stair riser, brown	M	XRF	0.0
	Stair stringer, brown	M	XRF	0.0
	Stair hand rail, brown	M	XRF	0.0
	Ceiling, white	C	XRF	0.0

FLOOR: FIFTH **CATEGORY: 4.03**

BULK SAMPLE #	LOCATION/DESCRIPTION	MATERIAL CONSTRUCTION	SAMPLING METHOD	RESULT
	Room 5005:			
	Door to Stairwell S9, tan/cream	M	XRF	6.8
	Door casing to Stairwell S9, black	M	XRF	0.0
	Ceiling, tan/cream	C	XRF	0.0
	Door to Room 5003, tan/cream	M	XRF	6.5

	Room 5006:			
	Walls (tile), white		XRF	0.0
	Interior door, cream	M	XRF	6.0
	Interior door casing, cream	M	XRF	6.0
	Exterior door, brown	M	XRF	0.0
	Exterior door casing, brown	M	XRF	0.0
	Window sash, black	M	XRF	2.2
	Window mullions, black	M	XRF	2.2
	Floor, gray	C	XRF	0.0
	Ceiling, white	C	XRF	1.2
B-75	Ceiling, white	C	AA	0.016%
	Room 5007:			
	Door to Stairwell S10, tan/cream	M	XRF	8.9
	Door casing to Stairwell S10, black	M	XRF	0.0
	Ceiling, white	C	XRF	0.0

FLOOR: FIFTH **CATEGORY: UNASSIGNED**

BULK SAMPLE #	LOCATION/DESCRIPTION	MATERIAL CONSTRUCTION	SAMPLING METHOD	RESULT
	Room 5010:			
	Door, tan/cream	M	XRF	7.8
	Door, tan/cream	M	XRF	14.8
	Door, tan/cream	M	XRF	12.0
	Door casings (3), black	M	XRF	0.0
(B-80)	Floor, gray	C	AA	0.457%
	Door casings (2), white	M	XRF	2.0
	Room 5011:			
	Window sill, gray	M	XRF	1.4
	Window sash, gray	M	XRF	0.0
	Window mullions, gray	M	XRF	0.0
	Floor, gray	C	XRF	1.2
B-80	Floor, gray	C	AA	0.457%
B-81	Exterior window sash, white	M	AA	1.736%
(B-81)	Exterior window mullions, white	M	AA	1.736%
B-82	Duct, gray	M	AA	0.418%
B-83	Ceiling, white	C	XRF	18.819
	Stairwell S49:			
	Door, gray	M	XRF	0.0
	Door casing, black	M	XRF	0.0

FLOOR: SIXTH **CATEGORY: 1.01**

BULK SAMPLE #	LOCATION/DESCRIPTION	MATERIAL CONSTRUCTION	SAMPLING METHOD	RESULT
	Stairwell S9:			
	Stair riser, black	M	XRF	1.0
	Stair riser, black	M	XRF	1.7
	Stair stringer (outside), white	M	XRF	3.0
	Stair stringer (inside), black	M	XRF	2.3
	Stair hand rail and balusters, black	M	XRF	3.1
	Window sash, black	M	XRF	0.0
	Window mullions, black	M	XRF	0.0

	Room 6001:			
	Doors (2) from Room 6001 to 6004, tan/cream	M	XRF	2.0
	Door casings (2) from Room 6001 to 6004, tan/cream	M	XRF	0.0
	Room 6002:			
	Door, tan/cream	M	XRF	2.1
	Door casing, black	M	XRF	0.0
	Room 6002:			
	Doors (2) to Room 6001, tan/cream	M	XRF	2.0
	Stairwell S10:			
	Door to roof, brown	M	XRF	0.0
	Door casing to roof, brown	M	XRF	0.0
	Door to Room 6009A, brown	M	XRF	0.0
	Door casing to Room 6009A, brown	M	XRF	0.0
B-77	Ceiling, white	C	AA	0.181%
	Walls, white			
	Stair stringer, black	M	XRF	6.3
	Stair riser, black	M	XRF	5.9
	Stair hand rail, black	M	XRF	7.2
	Window sills (2), black	M	XRF	6.2
	Window sashes (2), black	M	XRF	5.9
	Window mullions (2), black	M	XRF	4.7

FLOOR: SIXTH **CATEGORY: 3.07**

BULK SAMPLE #	LOCATION/DESCRIPTION	MATERIAL CONSTRUCTION	SAMPLING METHOD	RESULT
	Room 6004:			
	Door to Stairwell S10, tan/cream	M	XRF	2.1
	Door casing to Stairwell S10, black	M	XRF	0.0
B-84	Lower wall, brown		AA	<0.013%
	Mid wall, white			
	Structural steel throughout, cream	M	XRF	11.0
	Baseboard, black		XRF	12.6
	Room 6005:			
	Door, brown	M	XRF	2.3
	Door casing, brown	M	XRF	0.0
	Room 6006:			
	Door, brown	M	XRF	2.1
	Door casing, brown	M	XRF	0.0
	Room 6007:			
	Door, brown	M	XRF	2.3
	Door casing, brown	M	XRF	0.0
	Room 6008:			
	Doors (2), brown	M	XRF	1.9
	Door casings, brown	M	XRF	0.0

FLOOR: SIXTH **CATEGORY: UNASSIGNED**

BULK SAMPLE #	LOCATION/DESCRIPTION	MATERIAL CONSTRUCTION	SAMPLING METHOD	RESULT

	Room 6009A:			
	Catwalk, silver	M	XRF	16.0
	Room 6009B:			
	Catwalk, silver	M	XRF	16.0
	Room 6009:			
	Support beams, silver	M	XRF	15.9
	Catwalk, silver	M	XRF	16.2
	EXTERIOR SURFACES			
	Room 1122:			
	Window casing, white	W	XRF	5.0
	Room 1121:			
	Door, brown		XRF	0.0
	Door casing, brown		XRF	0.0
	Room 1136:			
	Door, brown		XRF	0.0
	Door casing, brown		XRF	0.0
	Stairwell S25:			
	Doors (2), brown		XRF	0.0
	Door casings (2), brown		XRF	0.0
B-103	Hand rail, black	M	AA	0.434%
	Room 1124:			
	Window casing near Room 1024 and 1033, white		XRF	5.0
	Window grates, black	M	XRF	11.4
	Room 1117A:			
	Door, brown		XRF	0.0
	Door casing, brown		XRF	0.0
	Room 1134:			
	Door Room 1034, brown		XRF	0.0
	Door casing Room 1034, black		XRF	0.0
	Room 1133:			
	Door casing Room 1033, black		XRF	0.0

Room 1150:		
Door Room 1150, black	XRF	5.0
Door casing Room 1150, black	XRF	4.8
Room 1095:		
Door Room 1095, gray	XRF	0.0
Door casing Room 1095, gray	XRF	0.0

INTENTIONALLY BLANK

Appendix D ACM Inventory

ASBESTOS SURVEY REPORT
UPDATED ZERO-BASED STUDY
ARVIN GYMNASIUM
WEST POINT ACADEMY

PROJECT NO. D3329-0003
APRIL 30, 1993

ASBESTOS SURVEY REPORT

TABLE OF CONTENTS

EXECUTIVE SUMMARY 1

ASBESTOS SURVEY REPORT 2

TABLE 1: INVENTORY OF ASBESTOS-CONTAINING MATERIALS 7

TABLE 2: SUSPECT ASBESTOS-CONTAINING MATERIALS LIST (ACM) 24

TABLE 3: BULK SAMPLE LOG 31

TABLE 4: COST ESTIMATES 52

TABLE 5: COST ESTIMATE BY FUND YEAR AND CATEGORY 55

TABLE 2: SUSPECT ASBESTOS-CONTAINING MATERIALS LIST

MATERIAL CODE	MATERIAL DESCRIPTION	MATERIAL TYPE	QUANTITY	FRIABLE NO/LOW MODERATE/HIGH	NUMBER OF SAMPLES	ASBESTOS YES/NO
1	BREECHING INSULATION ON AHU, ROOM 0066	TSI	10,000 SF	HIGH	1	YES
2	PIPE FITTING REPLACEMENT INSULATION, WHITE FIBROUS TYPE, ROOM 0075	TSI	10 SF	HIGH	3	NO
3	PIPE FITTING INSULATION, GREATER THAN 6 INCH OUTER DIAMETER, ROOM 0075	TSI	195 LN	HIGH	3	NO
4	PIPE FITTING INSULATION, LESS THAN 6 INCH OUTER DIAMETER	TSI	585 LN	HIGH	3	NO
5	TANK INSULATION, ROOM 0075	TSI	50 SF	HIGH	1	YES
6	PIPE FITTING PATCHING MUD ON FIBER GLASS, ROOM 0075	TSI	10 LN	HIGH	3	NO
	PIPE RUN INSULATION, GREATER THAN 6 INCH OUTER DIAMETER, ROOM 0081	TSI	286 LF	HIGH	3	YES
8	TANK INSULATION, TANK #2, ROOM 0081	TSI	450 SF	HIGH	3	YES
9	PIPE HANGER INSULATION, ROOM 0081	TSI	12 LN	HIGH	3	YES
10	RESILIENT FLOOR COVERING, 9 X 9 INCH TILES, GREY WITH WHITE SPECS	MM	1,620 SF	NO	1	YES
10.5	RESILIENT FLOOR COVERING MASTIC , UNDER 9 X 9 INCH TILES, GREY WITH WHITE SPECS	MM	1,620 SF	NO	1	ASSUMED
11	RESILIENT FLOOR COVERING, 9 X 9 INCH TILES, WHITE WITH BEIGE	MM	3,715 SF	NO	1	YES
11.5	RESILIENT FLOOR COVERING MASTIC, UNDER 9 X 9 INCH TILES, WHITE WITH BEIGE	MM	3,715 SF	NO	1	ASSUMED
	REPLACEMENT CEILING TILE, 1 X 1 FOOT TILES, INTER- LOCKING GRID	MM	1,449 SF	HIGH	1	NO

TABLE 2: SUSPECT ASBESTOS-CONTAINING MATERIALS LIST

RIAL CODE	MATERIAL DESCRIPTION	MATERIAL TYPE	QUANTITY	FRIABLE NO/LOW MODERATE/HIGH	NUMBER OF SAMPLES	ASBESTOS YES/NO
13	SUSPENDED CEILING PANELS, 2 X 4 FOOT TILES, FISSURED	MM	320 SF	HIGH	1	NO
14	TRANSITE CEILING PANELS, 2 X 2 FOOT TILES	MM	34,710 SF	NO	1	YES
15	PIPE INSULATION, TAR OVER HORSE HAIR	TSI	15 LF	HIGH	1	YES
16	PIPE RUN INSULATION, LESS THAN 6 INCH OUTER DIAMETER	TSI	8,590 LF	HIGH	1	YES
17	WALLBOARD	MM	33,985 SF	LOW	3	NO
18	JOINT COMPOUND ON WALLBOARD	MM	33,985 SF	LOW	9	NO
1'	PIPE FITTING INSULATION ON GLASS FIBER RUN INSULATION, GREATER THAN 6 INCH OUTER DIAMETER	TSI	70 UN	HIGH	1	YES
20	PIPE RUN INSULATION, GREATER THAN 6 INCH OUTER DIAMETER	TSI	4,946 LF	HIGH	1	YES
21	TANK INSULATION, TANK #1, ROOM 0037	TSI	16 SF	HIGH	1	YES
22	SPRAY APPLIED FIRE-PROOFING, ROOM 0041	SM	800 SF	HIGH	7	NO
23	BREECHING INSULATION ON AHU	TSI	17,790 SF	LOW	1	YES
24	PIPE FITTING INSULATION, GREATER THAN 6 INCH OUTER DIAMETER, ROOM 0059	TSI	20 UN	HIGH	3	NO
5	BREECHING INSULATION ON AHU, ROOM 0059 (LABELED NON- ASBESTOS)	TSI	10 SF	HIGH	3	NO
F	DEBRIS ON FLOOR, ROOM 0004	MM	500 SF	HIGH	1	YES

TABLE 2: SUSPECT ASBESTOS-CONTAINING MATERIALS LIST

MATERIAL CODE	MATERIAL DESCRIPTION	MATERIAL TYPE	QUANTITY	FRIABLE NO/LOW MODERATE/HIGH	NUMBER OF SAMPLES	ASBESTOS YES/NO
27	FLEXIBLE CONNECTOR, ROOM 0046	MM	30 SF	LOW	1	NO
28	TANK INSULATION, ROOM 0040	TSI	500 SF	HIGH	3	YES
29	RESILIENT FLOOR COVERING, 12 X 12 INCH TILES, WHITE WITH BROWN STREAKS	MM	27,136 SF	NO	1	NO
29.5	RESILIENT FLOOR COVERING MASTIC, UNDER 12 X 12 INCH TILES, WHITE WITH BROWN STREAKS	MM	27,136 SF	NO	1	ASSUMED
30	SUSPENDED CEILING PANELS 2 X 4 FOOT TILES, FISSURED	MM	27,136 SF	HIGH	1	NO
31	CEILING TILE, 1 X 1 FOOT TILES, FISSURED	MM	12,170 SF	HIGH	1	NO
32	CEILING TILE MASTIC, UNDER 1 X 1 FOOT TILES, FISSURED	MM	12,160 SF	NO	1	NO
33	RESILIENT FLOOR COVERING, 12 X 12 INCH TILES, TAN WITH WHITE STREAKS	MM	14,425 SF	NO	1	NO
33.5	RESILIENT FLOOR COVERING MASTIC, UNDER12 X 12 INCH TILES, TAN WITH WHITE STREAKS	MM	14,425 SF	NO	1	ASSUMED
34	RESILIENT FLOOR COVERING, 12 X 12 INCH TILES, BEIGE WITH WHITE SPECS	MM	445 SF	NO	1	NO
34.5	RESILIENT FLOOR COVERING MASTIC, UNDER 12 X 12 INCH TILES, BEIGE WITH	MM	445 SF	NO	1	ASSUMED
35	RESILIENT FLOOR COVERING, 9 X 9 INCH TILES, BEIGE WITH MAROON MULTI- COLOR	MM	160 SF	NO	1	YES
35.5	RESILIENT FLOOR COVERING MASTIC, UNDER 9 X 9 INCH TILES, BEIGE WITH MAROON MULTI- COLOR	MM	160 SF	NO	1	ASSUMED
36	SUSPENDED CEILING PANELS, 2 X2 FOOT TILES, FISSURED	MM	2,680 SF	HIGH	1	NO

TABLE 2: SUSPECT ASBESTOS-CONTAINING MATERIALS LIST

ERIAL CODE	MATERIAL DESCRIPTION	MATERIAL TYPE	QUANTITY	FRIABLE NO/LOW MODERATE/HIGH	NUMBER OF SAMPLES	ASBESTOS YES/NO
37	RESILIENT FLOOR COVERING, UNOLEUM, BROWN	MM	880 SF	NO	1	NO
38	RESILIENT FLOOR COVERING, 9 X 9 INCH TILES, RED WITH WHITE AND BLACK SPECS	MM	7,500 SF	NO	1	NO
38.5	RESILIENT FLOOR COVERING MASTIC, UNDER 9 X 9 INCH TILES, RED WITH WHITE AND BLACK SPECS	MM	7,500 SF	NO	1	ASSUMED
39	RESILIENT FLOOR COVERING, 9 X 9 INCH TILES, GREEN	MM	3,500 SF	NO	1	YES
39.5	RESILIENT FLOOR COVERING MASTIC, UNDER 9 X 9 INCH TILES, GREEN	MM	3,500 SF	NO	1	ASSUMED
40	RESILIENT FLOOR COVERING, 9 X 9 INCH TILES, GREY	MM	1,250 SF	NO	1	YES
	RESILIENT FLOOR COVERING MASTIC, UNDER 9 X 9 INCH TILES, GREY	MM	1,250 SF	NO	1	ASSUMED
41	RESILIENT FLOOR COVERING, 9 X 9 INCH TILES, BROWN	MM	1,250 SF	NO	1	YES
41.5	RESILIENT FLOOR COVERING MASTIC, UNDER 9 X 9 INCH TILES, BROWN	MM	1,250 SF	NO	1	ASSUMED
42	RESILIENT FLOOR COVERING, 12 X 12 INCH TILES, GREY WITH BLUE AND WHITE SPECS	MM	20 SF	NO	1	NO
42.5	RESILIENT FLOOR COVERING UNDER, MASTIC 12 X 12 INCH TILES, GREY WITH BLUE AND	MM	20 SF	NO	1	ASSUMED
43	RESILIENT FLOOR COVERING, 9 X 9 INCH TILES, DARK GREEN WITH WHITE STREAKS	MM	600 SF	NO	1	YES
43.5	RESILIENT FLOOR COVERING MASTIC, UNDER 9 X 9 INCH TILES, DARK GREEN WITH WHITE STREAKS	MM	600 SF	NO	1	ASSUMED
	RESILIENT FLOOR COVERING, 9 X 9 INCH TILES, WHITE WITH GREEN STREAKS	MM	150 SF	LOW	1	YES

TABLE 2: SUSPECT ASBESTOS-CONTAINING MATERIALS LIST

TERIAL ODE	MATERIAL DESCRIPTION	MATERIAL TYPE	QUANTITY	FRIABLE NO/LOW MODERATE/HIGH	NUMBER OF SAMPLES	ASBESTOS YES/NO
44.5	RESILIENT FLOOR COVERING MASTIC, UNDER 9 X 9 INCH TILES, WHITE WITH GREEN STREAKS	MM	150 SF	LOW	1	YES
45	MASTIC, UNDER 1 X 1 FOOT PRESSED WOOD CEILING TILES	MM	3,930 SF	NO	1	NO
46	RESILIENT FLOOR COVERING TAR PAPER, UNDER 9 X 9 INCH TILES, WHITE WITH GREEN STREAKS	MM	300 SF	NO	1	NO
47	RESILIENT FLOOR COVERING, 9 X 9 INCH TILES, BLACK	MM	2,500 SF	NO	1	YES
47.5	RESILIENT FLOOR COVERING MASTIC, UNDER 9 X 9 INCH TILES, BLACK	MM	2,500 SF	NO	1	ASSUMED
48	RESILIENT FLOOR COVERING, 9 X 9 INCH TILES, GREY WITH WHITE STREAKS	MM	3,740 SF	NO	1	YES
48.5	RESILIENT FLOOR COVERING MASTIC, UNDER 9 X 9 INCH TILES, GREY WITH WHITE STREAKS	MM	3,740 SF	NO	1	ASSUMED
49	MASTIC FROM OLD CEILING TILES, ROOM 1033	MM	8,960 SF	NO	1	NO
50	TAR PAPER OVER HORSE HAIR (ASBESTOS INSULATION ASSUMED UNDERNEATH), ROOM 1145	MM	3,030 SF	HIGH	1	ASSUMED
51	CRAWL SPACE DEBRIS, ROOM 1145	MM	6,000 SF	NO	1	NO
52	RESILIENT FLOOR COVERING, 12 X 12 INCH TILES, CREAM WITHTAN STREAKS	MM	600 SF	NO	1	NO
52.5	RESILIENT FLOOR COVERING MASTIC, UNDER 12 X 12 INCH TILES, CREAM WITH TAN STREAKS	MM	600 SF	NO	1	ASSUMED
53	SQUASH COURT WALL COVERING, ROOM 2039	MM	1,460 SF	NO	1	NO
54	SUSPENDED CEILING PANELS 2 X 2 FOOT TILES, FISSURED WITH RANDOM DOT	MM	26,000 SF	HIGH	1	NO

TABLE 2: SUSPECT ASBESTOS-CONTAINING MATERIALS LIST

TERIAL CODE	MATERIAL DESCRIPTION	MATERIAL TYPE	QUANTITY	FRIABLE NO/LOW MODERATE/HIGH	NUMBER OF SAMPLES	ASBEST. YES/NO
55	RESILIENT FLOOR COVERING, LINOLEUM, GREEN	MM	120 SF	NO	1	NO
56	FLEXIBLE CONNECTOR, ROOM 3004	MM	10 SF	NO	1	NO
57	RESILIENT FLOOR COVERING, 9 X 9 INCH TILES, LIGHT BLUE WITH WHITE STREAKS	MM	400 SF	NO	1	YES
57.5	RESILIENT FLOOR COVERING MASTIC, UNDER 9 X 9 INCH TILES, LIGHT BLUE WITH WHITE STREAKS	MM	400 SF	NO	1	ASSUMED
58	RESILIENT FLOOR COVERING, LINOLEUM, CHOCOLATE	MM	500 SF	NO	1	NO
58.5	RESILIENT FLOOR COVERING MASTIC, UNDER LINOLEUM, CHOCOLATE	MM	500 SF	NO	1	NO
	SPRAY APPLIED FIRE-PROOFING, ROOM 4010	SM	120 SF	NO	7	NO
60	ELECTRIC CONDUIT WRAP, ROOM 0038	MM	8 LF	NO	1	NO
61	FIRE DOOR INSULATION	MM	8 UN	NO	0	ASSUMED
62	DEBRIS	MM	6,195 SF	HIGH	0	YES
63	WALLBOARD COMPOSITE	MM	30,000 SF	LOW	9	NO
64	ROOF COMPOSITE, CRANDAL POOL	MM	9,000 SF	LOW	2	NO
65	ROOF FLASHING, CRANDAL POOL	MM	1,500 SF	LOW	2	NO
	ROOF FLASHING CEMENT, CRANDAL POOL	MM	1,500 SF	LOW	2	YES

TABLE 2: SUSPECT ASBESTOS-CONTAINING MATERIALS LIST

ERIAL ODE	MATERIAL DESCRIPTION	MATERIAL TYPE	QUANTITY	FRIABLE NO/LOW MODERATE/HIGH	NUMBER OF SAMPLES	ASBESTOS YES/NO
67	PLASTER, OLYMPIC POOL FACILITY BUILDING	SM	8,180 SF	NO	7	NO
68	PLASTER, MAIN BUILDING	SM	110,225 SF	NO	13	NO

TABLE 3 : BULK SAMPLE LOG

SAMPLE NO.	DATE	MATERIAL	RESULTS OF ANALYSIS
1 A	5/2/92	BREECHING INSULATION ON AHU, ROOM 0066, POOL MECHANICAL EQUIPMENT ROOM	ASBESTOS CHRYSOTILE 25% FIBROUS GLASS 15% MINERAL FILLER 40% OPAQUES 20%
2 A	5/2/92	PIPE FITTING REPLACEMENT INSULATION, WHITE FIBROUS TYPE, ROOM 0075	ASBESTOS NONE DETECTED FIBROUS GLASS 100%
2 B	5/2/92	PIPE FITTING REPLACEMENT INSULATION, WHITE FIBROUS TYPE, ROOM 0075	ASBESTOS NONE DETECTED FIBROUS GLASS 100%
2 C	5/2/92	PIPE FITTING REPLACEMENT INSULATION, WHITE FIBROUS TYPE, ROOM 0075	ASBESTOS NONE DETECTED FIBROUS GLASS 100%
3 A	5/2/92	PIPE FITTING INSULATION, GREATER THAN 6 INCH OUTER DIAMETER, ROOM 0075	ASBESTOS NONE DETECTED FIBROUS GLASS 60% MINERAL FILLER 40%
3 B	5/2/92	PIPE FITTING INSULATION, GREATER THAN 6 INCH OUTER DIAMETER, THIRD FLOOR, POOL MECHANICAL SPACE	ASBESTOS NONE DETECTED FIBROUS GLASS 40% MINERAL FILLER 50% OPAQUES 10%
3 C	5/2/92	PIPE FITTING INSULATION, GREATER THAN 6 INCH OUTER DIAMETER, THIRD FLOOR, POOL, MECHANICAL SPACE	ASBESTOS NONE DETECTED CELLULOSE 5% FIBROUS GLASS 40% MINERAL FILLER 50% OPAQUES 5%

TABLE 3 : BULK SAMPLE LOG

SAMPLE NO.	DATE	MATERIAL	RESULTS OF ANALYSIS
4 A	5/2/92	PIPE FITTING INSULATION, LESS THAN 6 INCH OUTER DIAMETER, BASEMENT POOL MECHANICAL EQUIPMENT ROOM	ASBESTOS NONE DETECTED FIBROUS GLASS 35% MINERAL FILLER 45% OPAQUES 20%
4 B	5/2/92	PIPE FITTING INSULATION, LESS THAN 6 INCH OUTER DIAMETER, ROOM 0085, OLYMPIC POOL FACILITY	ASBESTOS NONE DETECTED FIBROUS GLASS 40% MINERAL FILLER 60%
4 C	5/2/92	PIPE FITTING INSULATION, LESS THAN 6 INCH OUTER DIAMETER, ROOM 1131	ASBESTOS NONE DETECTED FIBROUS GLASS 40% MINERAL FILLER 60%
5 A	5/2/92	TANK INSULATION, ROOM 0075, BASEMENT, POOL MECHANICAL EQUIPMENT ROOM	ASBESTOS CHRYSOTILE 90% OPAQUES 10%
6 A	5/2/92	PIPE FITTING PATCHING MUD, ON FIBER GLASS, ROOM 0075, BASEMENT, POOL MECHANICAL EQUIPMENT ROOM	ASBESTOS NONE DETECTED FIBROUS GLASS 35% MINERAL FILLER 65%
6 B	5/2/92	PIPE FITTING PATCHING MUD, ON FIBER GLASS, ROOM 0075, BASEMENT, POOL MECHANICAL EQUIPMENT ROOM	ASBESTOS NONE DETECTED FIBROUS GLASS 35% MINERAL FILLER 65%
6 C	5/2/92	PIPE FITTING PATCHING MUD, ON FIBER GLASS, ROOM 0075, BASEMENT, POOL MECHANICAL EQUIPMENT ROOM	ASBESTOS NONE DETECTED FIBROUS GLASS 30% MINERAL FILLER 70%

TABLE 3 : BULK SAMPLE LOG

SAMPLE NO.	DATE	MATERIAL	RESULTS OF ANALYSIS
7 A	5/2/92	PIPE RUN INSULATION, GREATER THAN 6 INCH OUTER DIAMETER, BASEMENT, POOL MECHANICAL EQUIPMENT ROOM	ASBESTOS AMOSITE 20% MINERAL FILLER 80%
8 A	5/2/92	TANK INSULATION, TANK #2, ROOM 0081, BASEMENT, POOL MECHANICAL EQUIPMENT ROOM	ASBESTOS CHRYSOTILE 60% MINERAL FILLER 30% OPAQUES 10%
9 A	5/2/92	PIPE HANGER INSULATION, ROOM 0081, BASEMENT, POOL MECHANICAL EQUIPMENT ROOM	ASBESTOS AMOSITE 20% MINERAL FILLER 65% OPAQUES 15%
10 A	5/2/92	RESILIENT FLOOR COVERING, 9 X 9 INCH TILES, GREY WITH WHITE SPECS, BASEMENT STAIRWELL S-12	ASBESTOS CHRYSOTILE 2% MINERAL FILLER 40% ORGANIC BINDERS 58%
10.5 M	5/2/92	RESILIENT FLOOR COVERING MASTIC , UNDER 9 X 9 INCH TILES, GREY WITH WHITE SPECS, BASEMENT STAIRWELL S-12	ASBESTOS NONE DETECTED MINERAL FILLER 30% ORGANIC BINDERS 70%
11 A	5/2/92	RESILIENT FLOOR COVERING, 9 X 9 INCH TILES, WHITE WITH BEIGE, BASEMENT, STAIRWELL S-12	ASBESTOS CHRYSOTILE 2% MINERAL FILLER 58% ORGANIC BINDERS 40%
11.5 M	5/2/92	RESILIENT FLOOR COVERING, MASTIC, UNDER 9 X 9 INCH TILES, WHITE WITH BEIGE, BASEMENT, STAIRWELL S-12	ASBESTOS NONE DETECTED MINERAL FILLER 40% ORGANIC BINDERS 60%

TABLE 3 : BULK SAMPLE LOG

SAMPLE NO.	DATE	MATERIAL	RESULTS OF ANALYSIS
12 A	5/2/92	REPLACEMENT CEILING TILE, 1 X 1 FOOT TILES, INTER- LOCKING GRID, CORRIDOR BY 0064	ASBESTOS NONE DETECTED CELLULOSE 40% FIBROUS GLASS 60%
13 A	5/2/92	SUSPENDED CEILING PANELS, 2 X 4 FOOT TILES, FISSURED, VISITING LOCKER ROOM, ROOM 1126	ASBESTOS NONE DETECTED CELLULOSE 50% FIBROUS GLASS 20% MINERAL FILLER 30%
14 A	5/2/92	TRANSITE CEILING PANELS, 2 X 2 FOOT TILES, ROOM 1119	ASBESTOS CHRYSOTILE 45% MINERAL FILLER 55%
15 A	5/2/92	PIPE INSULATION, TAR OVER HORSE HAIR, ROOM 0036 A	ASBESTOS CHRYSOTILE 10% CELLULOSE 20% MINERAL FILLER 70%
16 A	5/2/92	PIPE RUN INSULATION, LESS THAN 6 INCH OUTER DIAMETER, BASEMENT, WOOD SHOP, ROOM 0036A	ASBESTOS CHRYSOTILE 50% CELLULOSE 20% MINERAL FILLER 10% ORGANIC BINDERS 15% OPAQUES 5%
17 A	5/2/92	WALLBOARD, BASEMENT WOOD SHOP, ROOM 0036A	ASBESTOS NONE DETECTED CELLULOSE 5% MINERAL FILLER 95%
17 B	5/2/92	WALLBOARD, ROOM 3001	ASBESTOS NONE DETECTED CELLULOSE 30% MINERAL FILLER 50% OPAQUES 20%

TABLE 3 : BULK SAMPLE LOG

SAMPLE NO.	DATE	MATERIAL	RESULTS OF ANALYSIS
.7 C	5/2/92	WALLBOARD, HIGH VOLTAGE NO. 1, ROOM 1145	ASBESTOS NONE DETECTED CELLULOSE 10% MINERAL FILLER 90%
18 A	5/2/92	JOINT COMPOUND ON WALLBOARD, BASEMENT, WOOD SHOP, ROOM 0037	ASBESTOS NONE DETECTED MINERAL FILLER 100%
18 B	5/2/92	JOINT COMPOUND ON WALLBOARD, ROOM 303	ASBESTOS CHRYSOTILE 2% MINERAL FILLER 80% OPAQUES 18%
19 A	5/2/92	PIPE FITTING INSULATION ON GLASS FIBER RUN INSULATION, GREATER THAN 6 INCH OUTER DIAMETER, BASEMENT, MECHANICAL ROOM NO. 1, ROOM 0037	ASBESTOS CHRYSOTILE 30% CELLULOSE 15% FIBROUS GLASS 10% MINERAL FILLER 45%
20 A	5/2/92	PIPE RUN INSULATION, GREATER THAN 6 INCH OUTER DIAMETER , BASEMENT, MECHANICAL ROOM NO. 1, ROOM 0037	ASBESTOS CHRYSOTILE 60% MINERAL FILLER 40%
21 A	5/2/92	TANK INSULATION, TANK #1, BASEMENT, MECHANICAL ROOM NO. 1, ROOM 0037	ASBESTOS CHRYSOTILE 75% FIBROUS GLASS 5% OPAQUES 20%
22 A	5/2/92	SPRAY APPLIED FIRE-PROOFING, ROOM 0041	ASBESTOS NONE DETECTED FIBROUS GLASS 70% MINERAL FILLER 30%

TABLE 3 : BULK SAMPLE LOG

SAMPLE NO.	DATE	MATERIAL	RESULTS OF ANALYSIS
22 B	5/2/92	SPRAY APPLIED FIRE-PROOFING, BASEMENT, ABANDONED POOL, ROOM 0041	ASBESTOS NONE DETECTED FIBROUS GLASS 70% MINERAL FILLER 30%
22 C	5/2/92	SPRAY APPLIED FIRE-PROOFING, BASEMENT, ABANDONED POOL, ROOM 0041	ASBESTOS NONE DETECTED FIBROUS GLASS 65% MINERAL FILLER 35%
22 D	5/2/92	SPRAY APPLIED FIRE-PROOFING, BASEMENT, ABANDONED POOL, ROOM 0041	ASBESTOS NONE DETECTED FIBROUS GLASS 65% MINERAL FILLER 35%
22 E	5/2/92	SPRAY APPLIED FIRE-PROOFING, BASEMENT, ABANDONED POOL, ROOM 0041	ASBESTOS NONE DETECTED FIBROUS GLASS 70% MINERAL FILLER 30%
22 F	5/2/92	SPRAY APPLIED FIRE-PROOFING, BASEMENT, ABANDONED POOL, ROOM 0041	ASBESTOS NONE DETECTED FIBROUS GLASS 70% MINERAL FILLER 30%
22 G	5/2/92	SPRAY APPLIED FIRE-PROOFING, BASEMENT, ABANDONED POOL, ROOM 0041	ASBESTOS NONE DETECTED FIBROUS GLASS 70% MINERAL FILLER 30%
23 A	5/2/92	BREECHING INSULATION ON AHU, ROOM 0025	ASBESTOS CHRYSOTILE 95% OPAQUES 5%

TABLE 3 : BULK SAMPLE LOG

SAMPLE NO.	DATE	MATERIAL	RESULTS OF ANALYSIS
24 A	5/2/92	PIPE FITTING INSULATION, GREATER THAN 6 INCH OUTER DIAMETER, POOL TUNNEL, ROOM 0059	ASBESTOS NONE DETECTED FIBROUS GLASS 40% MINERAL FILLER 60%
24 B	5/2/92	PIPE FITTING INSULATION, GREATER THAN 6 INCH OUTER DIAMETER, POOL TUNNEL, ROOM 0059	ASBESTOS NONE DETECTED FIBROUS GLASS 40% MINERAL FILLER 60%
24 C	5/2/92	PIPE FITTING INSULATION, GREATER THAN 6 INCH OUTER DIAMETER, POOL MECHANICAL ROOM, SUB-BASEMENT, ROOM 0059	ASBESTOS NONE DETECTED FIBROUS GLASS 30% MINERAL FILLER 70%
25 A	5/2/92	BREECHING INSULATION ON AHU, POOL MECHANICAL ROOM, SUB-BASEMENT, ROOM 0059, (LABELED NON- ASBESTOS)	ASBESTOS NONE DETECTED FIBROUS GLASS 40% MINERAL FILLER 45% OPAQUES 15%
25 B	5/2/92	BREECHING INSULATION ON AHU, POOL MECHANICAL ROOM, SUB-BASEMENT, ROOM 0059, (LABELED NON- ASBESTOS)	ASBESTOS NONE DETECTED FIBROUS GLASS 40% MINERAL FILLER 50% OPAQUES 10%
25 C	5/2/92	BREECHING INSULATION ON AHU, POOL MECHANICAL ROOM, SUB-BASEMENT, ROOM 0059, (LABELED NON- ASBESTOS)	ASBESTOS NONE DETECTED FIBROUS GLASS 40% MINERAL FILLER 60%
26 A	5/2/92	DEBRIS ON FLOOR, CRAWLSPACE OFF OF POOL TUNNEL, ROOM 0004	ASBESTOS CHRYSOTILE 2% CELLULOSE 10% FIBROUS GLASS 25% SYNTHETIC 3% MINERAL FILLER 60%

TABLE 3 : BULK SAMPLE LOG

SAMPLE NO.	DATE	MATERIAL	RESULTS OF ANALYSIS
27 A	5/2/92	FLEXIBLE CONNECTOR, ROOM 0046	ASBESTOS NONE DETECTED CELLULOSE 90% OPAQUES 10%
28 A	5/2/92	TANK INSULATION, ROOM 0040	ASBESTOS NONE DETECTED FIBROUS GLASS 45% MINERAL FILLER 35% OPAQUES 20%
28 B	5/2/92	TANK INSULATION, ROOM 0040	ASBESTOS CHRYSOTILE 80% MINERAL FILLER 10% OPAQUES 10%
28 C	5/2/92	TANK INSULATION, ROOM 0040	ASBESTOS CHRYSOTILE 80% MINERAL FILLER 10% OPAQUES 10%
29 A	5/2/92	RESILIENT FLOOR COVERING,12 X 12 INCH TILES, WHITE WITH BROWN STREAKS, WOMEN'S LOCKER ROOM, ROOM 0050	ASBESTOS NONE DETECTED MINERAL FILLER 40% OPAQUES 60%
29.5 M	5/2/92	RESILIENT FLOOR COVERING MASTIC, UNDER 12 X 12 INCH TILES, WHITE WITH BROWN STREAKS, WOMEN'S LOCKER ROOM, ROOM 0050	ASBESTOS CHRYSOTILE 10% FIBROUS GLASS TRACE MINERAL FILLER 30% OPAQUES 60%
30 A	5/2/92	SUSPENDED CEILING PANELS, 2 X 4 FOOT TILES, FISSURED, WOMEN'S LOCKER ROOM, ROOM 0050	ASBESTOS NONE DETECTED CELLULOSE 30% FIBROUS GLASS 40% MINERAL FILLER 30%

TABLE 3 : BULK SAMPLE LOG

SAMPLE NO.	DATE	MATERIAL	RESULTS OF ANALYSIS
31 A	5/2/92	CEILING TILE, 1 X 1 FOOT TILES, FISSURED, SPORTS MEDICINE, ROOM 1059	ASBESTOS NONE DETECTED FIBROUS GLASS 100% OPAQUES TRACE
32 A	5/2/92	CEILING TILE MASTIC, UNDER 1 X 1 FOOT TILES, FISSURED, SPORTS MEDICINE, ROOM 1059	ASBESTOS NONE DETECTED FIBROUS GLASS 5% ORGANIC BINDERS 95%
33 A	5/2/92	RESILIENT FLOOR COVERING,12 X 12 INCH TILES, TAN WITH WHITE STREAKS, ROOM 1061	ASBESTOS NONE DETECTED MINERAL FILLER 60% ORGANIC BINDERS 40%
33.5 A	5/2/92	RESILIENT FLOOR COVERING MASTIC, UNDER 12 X 12 INCH TILES, TAN WITH WHITE STREAKS, ROOM 1061	ASBESTOS CHRYSOTILE 15% CELLULOSE 10% MINERAL FILLER 35% ORGANIC BINDERS 40%
34 A	5/2/92	RESILIENT FLOOR COVERING, 12 X 12 INCH TILES, BEIGE WITH WHITE SPECS, ROOM 1064	ASBESTOS NONE DETECTED MINERAL FILLER 40% ORGANIC BINDERS 60%
35 A	5/2/92	RESILIENT FLOOR COVERING, 9 X 9 INCH TILES, BEIGE WITH MAROON MULTI- COLOR, ROOM 1069	ASBESTOS CHRYSOTILE 3% MINERAL FILLER 40% ORGANIC BINDERS 57%
35.5 A	5/2/92	RESILIENT FLOOR COVERING MASTIC, UNDER 9 X 9 INCH TILES, BEIGE WITH MAROON MULTI-COLOR, ROOM 1069	ASBESTOS CHRYSOTILE 15% MINERAL FILLER 20% ORGANIC BINDERS 65%

TABLE 3 : BULK SAMPLE LOG

PLE NO.	DATE	MATERIAL	RESULTS OF ANALYSIS
36 A	5/2/92	SUSPENDED CEILING PANEL, 2 X 2 FOOT TILES, FISSURED, ROOM 1098	ASBESTOS NONE DETECTED FIBROUS GLASS 70% ORGANIC BINDERS 20% OPAQUES 10%
37 A	5/2/92	RESILIENT FLOOR COVERING, LINOLEUM, BROWN, ROOM 1088	ASBESTOS NONE DETECTED CELLULOSE 35% ORGANIC BINDERS 65%
38 A	5/2/92	RESILIENT FLOOR COVERING, 9 X 9 INCH TILES, RED WITH WHITE AND BLACK SPECS, ROOM 1054	ASBESTOS NONE DETECTED MINERAL FILLER 10% ORGANIC BINDERS 40% OPAQUES 50%
38.5 M	5/2/92	RESILIENT FLOOR COVERING MASTIC, UNDER 9 X 9 INCH TILES, RED WITH WHITE AND BLACK SPECS, ROOM 1054	ASBESTOS NONE DETECTED CELLULOSE 75% SYNTHETIC 5% MINERAL FILLER TRACE ORGANIC BINDERS 20%
39 A	5/2/92	RESILIENT FLOOR COVERING, 9 X 9 INCH TILES, GREEN, ODIA EQUIPMENT ROOM, ROOM 0048	ASBESTOS CHRYSOTILE 2% MINERAL FILLER 40% ORGANIC BINDERS 58%
39.5 M	5/2/92	RESILIENT FLOOR COVERING MASTIC, UNDER 9 X 9 INCH TILES, GREEN, ODIA EQUIPMENT ROOM, ROOM 0048	ASBESTOS CHRYSOTILE 3% CELLULOSE 7% MINERAL FILLER 35% ORGANIC BINDERS 55%
40 A	5/2/92	RESILIENT FLOOR COVERING, 9 X 9 INCH TILES, GREY, ROOM 0048	ASBESTOS CHRYSOTILE 5% MINERAL FILLER 35% ORGANIC BINDERS 60%

TABLE 3 : BULK SAMPLE LOG

SAMPLE NO.	DATE	MATERIAL	RESULTS OF ANALYSIS
40.5 M	5/2/92	RESILIENT FLOOR COVERING MASTIC, UNDER 9 X 9 INCH TILES, GREY, ROOM 1048	ASBESTOS NONE DETECTED CELLULOSE 35% MINERAL FILLER 15% ORGANIC BINDERS 50%
41 A	5/2/92	RESILIENT FLOOR COVERING, 9 X 9 INCH TILES, BROWN, ODIA EQUIPMENT ROOM, ROOM 0048	ASBESTOS CHRYSOTILE 3% CELLULOSE 2% MINERAL FILLER 40% ORGANIC BINDERS 55%
41.5 M	5/2/92	RESILIENT FLOOR COVERING MASTIC, UNDER 9 X 9 INCH TILES, BROWN, ODIA EQUIPMENT ROOM, ROOM 0048	ASBESTOS NONE DETECTED CELLULOSE 50% MINERAL FILLER 10% ORGANIC BINDERS 40%
42 A	5/2/92	RESILIENT FLOOR COVERING, 12 X 12 INCH TILES, GREY WITH BLUE AND WHITE SPECS, ODIA EQUIPMENT ROOM, ROOM 0048	ASBESTOS NONE DETECTED MINERAL FILLER 100%
42.5 M	5/2/92	RESILIENT FLOOR COVERING MASTIC, UNDER 12 X 12 INCH TILES, GREY WITH BLUE AND WHITE SPECS, ODIA EQUIPMENT ROOM, ROOM 0048	ASBESTOS NONE DETECTED CELLULOSE 5% MINERAL FILLER 20% ORGANIC BINDERS 75%
43 A	5/2/92	RESILIENT FLOOR COVERING, 9 X 9 INCH TILES, DARK GREEN WITH WHITE STREAKS, ROOM 1003	ASBESTOS CHRYSOTILE 3% CELLULOSE 2% MINERAL FILLER 40% ORGANIC BINDERS 55%
43.5 M	5/2/92	RESILIENT FLOOR COVERING MASTIC, UNDER 9 X 9 INCH TILES, DARK GREEN WITH WHITE STREAKS, ROOM 1003	ASBESTOS NONE DETECTED CELLULOSE 60% MINERAL FILLER 10% ORGANIC BINDERS 30%

TABLE 3 : BULK SAMPLE LOG

SAMPLE NO.	DATE	MATERIAL	RESULTS OF ANALYSIS
44 A	5/2/92	RESILIENT FLOOR COVERING, 9 X 9 INCH TILES, WHITE WITH GREEN STREAKS, ROOM 1003	ASBESTOS CHRYSOTILE 2% MINERAL FILLER 48% ORGANIC BINDERS 50%
44.5 M	5/2/92	RESILIENT FLOOR COVERING MASTIC, UNDER 9 X 9 INCH TILES, WHITE WITH GREEN STREAKS, ROOM 1003	ASBESTOS CHRYSOTILE TRACE CELLULOSE 20% MINERAL FILLER 30% ORGANIC BINDERS 50%
45 A	5/2/92	MASTIC, UNDER 1 X 1 FOOT PRESSED WOOD CEILING TILES, ROOM 1003	ASBESTOS NONE DETECTED ORGANIC BINDERS 100%
46 A	5/2/92	RESILIENT FLOOR COVERING TAR PAPER, UNDER 9 X 9 INCH TILES, WHITE WITH GREEN STREAKS, ROOM 1003	ASBESTOS NONE DETECTED CELLULOSE 80% ORGANIC BINDERS 20%
47 A	5/2/92	RESILIENT FLOOR COVERING AND MASTIC, 9 X 9 INCH TILES, BLACK, ROOM 1033	ASBESTOS CHRYSOTILE 5% CELLULOSE 5% MINERAL FILLER 40% ORGANIC BINDERS 50%
48 A	5/2/92	RESILIENT FLOOR COVERING, 9 X 9 INCH TILES, GREY WITH WHITE STREAKS, ROOM 1033	ASBESTOS CHRYSOTILE 3% CELLULOSE 2% MINERAL FILLER 45% ORGANIC BINDERS 50%
48.5 M	5/2/92	RESILIENT FLOOR COVERING MASTIC, UNDER 9 X 9 INCH TILES, GREY WITH WHITE STREAKS, ROOM 1033	ASBESTOS NONE DETECTED CELLULOSE 10% MINERAL FILLER 30% ORGANIC BINDERS 60%

TABLE 3 : BULK SAMPLE LOG

SAMPLE NO.	DATE	MATERIAL	RESULTS OF ANALYSIS
49 A	5/2/92	MASTIC FROM OLD CEILING TILES, ROOM 1033	ASBESTOS NONE DETECTED CELLULOSE 35% MINERAL FILLER 5% OPAQUES 60%
49 B	5/2/92	MASTIC FROM OLD CEILING TILES, ROOM 1033	ASBESTOS NONE DETECTED MINERAL FILLER 5% OPAQUES 95%
50 A	5/2/92	TAR PAPER OVER HORSE HAIR (ASBESTOS INSULATION ASSUMED UNDERNEATH), ROOM 1145	ASBESTOS NONE DETECTED CELLULOSE 80% SYNTHETIC 5% ORGANIC BINDER 15%
51 A	5/2/92	CRAWL SPACE DEBRIS, ROOM 1145	ASBESTOS NONE DETECTED CELLULOSE 30% FIBROUS GLASS 40% MINERAL FILLER 30%
52 A	5/2/92	RESILIENT FLOOR COVERING, 12 X 12 INCH TILES, CREAM WITH TAN STREAKS, ROOM 2038	ASBESTOS NONE DETECTED MINERAL FILLER 40% ORGANIC BINDERS 60%
52.5 M	5/2/92	RESILIENT FLOOR COVERING MASTIC, UNDER 12 X 12 INCH TILES, CREAM WITH TAN STREAKS	ASBESTOS NONE DETECTED CELLULOSE 10% MINERAL FILLER 30% ORGANIC BINDERS 60%
53 A	5/2/92	SQUASH COURT WALL COVERING, ROOM 2039	ASBESTOS NONE DETECTED CELLULOSE 40% MINERAL FILLER 5% OPAQUES 55%

TABLE 3 : BULK SAMPLE LOG

SAMPLE NO.	DATE	MATERIAL	RESULTS OF ANALYSIS
54 A	5/2/92	SUSPENDED CEILING PANEL, 2 X 2 FOOT TILES, FISSURED WITH RANDOM DOT, ROOM 2062	ASBESTOS NONE DETECTED CELLULOSE 30% FIBROUS GLASS 45% MINERAL FILLER 25%
55 A	5/2/92	RESILIENT FLOOR COVERING, LINOLEUM, GREEN, ROOM 3013	ASBESTOS NONE DETECTED CELLULOSE 20% MINERAL FILLER 30% ORGANIC BINDERS 50%
56 A	5/2/92	FLEXIBLE CONNECTOR, ROOM 3004	ASBESTOS NONE DETECTED CELLULOSE 100%
57 A	5/2/92	RESILIENT FLOOR COVERING, 9 X 9 INCH TILES, LIGHT BLUE WITH WHITE STREAKS, ROOM 3036	ASBESTOS CHRYSOTILE 3% CELLULOSE 2% MINERAL FILLER 40% ORGANIC BINDERS 55%
57.5 M	5/2/92	RESILIENT FLOOR COVERING MASTIC, UNDER 9 X 9 INCH TILES, LIGHT BLUE WITH WHITE STREAKS, ROOM 3036	ASBESTOS NONE DETECTED CELLULOSE 5% MINERAL FILLER 35% ORGANIC BINDERS 60%
58 A	5/2/92	RESILIENT FLOOR COVERING, LINOLEUM, CHOCOLATE	ASBESTOS NONE DETECTED CELLULOSE 30% ORGANIC BINDERS 70%
58.5 M	5/2/92	RESILIENT FLOOR COVERING MASTIC, UNDER LINOLEUM, CHOCOLATE	ASBESTOS NONE DETECTED CELLULOSE 65% FIBROUS GLASS 10% VERMICULITE 25%

TABLE 3 : BULK SAMPLE LOG

SAMPLE NO.	DATE	MATERIAL	RESULTS OF ANALYSIS
59 A	5/2/92	SPRAY APPLIED FIRE-PROOFING, ROOM 4010	ASBESTOS NONE DETECTED CELLULOSE 5% FIBROUS GLASS 75% SYNTHETIC TRACE MINERAL FILLER 20%
59 B	5/2/92	SPRAY APPLIED FIRE-PROOFING, ROOM 4010	ASBESTOS NONE DETECTED FIBROUS GLASS 80% MINERAL FILLER 10% ORGANIC BINDERS 10%
59 C	5/2/92	SPRAY APPLIED FIRE-PROOFING, ROOM 4010	ASBESTOS NONE DETECTED FIBROUS GLASS 80% MINERAL FILLER 20%
59 D	5/2/92	SPRAY APPLIED FIRE-PROOFING, ROOM 4010	ASBESTOS NONE DETECTED FIBROUS GLASS 70% MINERAL FILLER 30%
59 E	5/2/92	SPRAY APPLIED FIRE-PROOFING, ROOM 4010	ASBESTOS NONE DETECTED FIBROUS GLASS 70% MINERAL FILLER 30%
59 F	5/2/92	SPRAY APPLIED FIRE-PROOFING, ROOM 4010	ASBESTOS NONE DETECTED FIBROUS GLASS 75% MINERAL FILLER 20% OPAQUES 5%
59 G	5/2/92	SPRAY APPLIED FIRE-PROOFING, ROOM 4010	ASBESTOS NONE DETECTED FIBROUS GLASS 70% MINERAL FILLER 30%

TABLE 3 : BULK SAMPLE LOG

SAMPLE NO.	DATE	MATERIAL	RESULTS OF ANALYSIS
60 A	5/2/92	ELECTRIC CONDUIT WRAP, ROOM 0038	ASBESTOS NONE DETECTED CELLULOSE 90% ORGANIC BINDERS 5% OPAQUES 5%
63 A	4/15/93	WALLBOARD COMPOSITE	ASBESTOS NONE DETECTED CELLULOSE 10% MINERAL FILLER 20% VERMICULITE 70%
63 B	4/15/93	WALLBOARD COMPOSITE	ASBESTOS NONE DETECTED CELLULOSE 20% MINERAL FILLER 30% VERMICULITE 50%
63 C	4/15/93	WALLBOARD COMPOSITE	ASBESTOS NONE DETECTED CELLULOSE 20% MINERAL FILLER 50% VERMICULITE 30%
63 D	4/15/93	WALLBOARD COMPOSITE	ASBESTOS NONE DETECTED CELLULOSE 20% MINERAL FILLER 40% VERMICULITE 40%
63 E	4/15/93	WALLBOARD COMPOSITE	ASBESTOS NONE DETECTED CELLULOSE 10% MINERAL FILLER 40% VERMICULITE 50%
63 F	4/15/93	WALLBOARD COMPOSITE	ASBESTOS NONE DETECTED CELLULOSE 10% MINERAL FILLER 60% VERMICULITE 30%

TABLE 3 : BULK SAMPLE LOG

SAMPLE NO.	DATE	MATERIAL	RESULTS OF ANALYSIS
63 G	4/15/93	WALLBOARD COMPOSITE	ASBESTOS NONE DETECTED CELLULOSE 30% MINERAL FILLER 40% VERMICULITE 30%
63 H	4/15/93	WALLBOARD COMPOSITE	ASBESTOS NONE DETECTED CELLULOSE 10% MINERAL FILLER 60% VERMICULITE 30%
63 I	4/15/93	WALLBOARD COMPOSITE	ASBESTOS NONE DETECTED CELLULOSE 10% MINERAL FILLER 60% VERMICULITE 30%
64 A	4/15/93	ROOF COMPOSITE, CRANDALL POOL	ASBESTOS NONE DETECTED CELLULOSE 10% FIBROUS GLASS 20% MINERAL FILLER 30% ORGANIC BINDER 40%
64 B	4/15/93	ROOF COMPOSITE, CRANDALL POOL	ASBESTOS NONE DETECTED CELLULOSE 10% FIBROUS GLASS 20% MINERAL FILLER 30% ORGANIC BINDER 40%
65 A	4/15/93	ROOF FLASHING, CRANDALL POOL	ASBESTOS NONE DETECTED MINERAL FILLER 50% ORGANIC BINDER 50%
65 B	4/15/93	ROOF FLASHING, CRANDALL POOL	ASBESTOS NONE DETECTED MINERAL FILLER 50% ORGANIC BINDER 50%

TABLE 3 : BULK SAMPLE LOG

SAMPLE NO.	DATE	MATERIAL	RESULTS OF ANALYSIS
65 A	4/15/93	ROOF FLASHING CEMENT, CRANDALL POOL	ASBESTOSCHRYSOTILE 15% MINERAL FILLER 15% ORGANIC BINDER 70%
66 B	4/15/93	ROOF FLASHING CEMENT, CRANDALL POOL	ASBESTOS CHRYSOTILE 20% MINERAL FILLER 20% ORGANIC BINDER 60%
67 A	5/2/92	PLASTER, OLYMPIC POOL FACILITY BUILDING	ASBESTOS NONE DETECTED MINERAL FILLER 100%
67 B	5/2/92	PLASTER, OLYMPIC POOL FACILITY BUILDING, BASEMENT, LAUNDRY ROOM, ROOM 0074	ASBESTOS NONE DETECTED MINERAL FILLER 100%
67 C	5/2/92	PLASTER, OLYMPIC POOL FACILITY BUILDING, BASEMENT, VISITING LOCKER ROOM NO. 12, ROOM 0093	ASBESTOS NONE DETECTED MINERAL FILLER 100%
67 D	5/2/92	PLASTER, OLYMPIC POOL FACILITY BUILDING, BASEMENT, VISITING LOCKER ROOM NO. 12, STAIRWELL TO BASEMENT, S-12	ASBESTOS NONE DETECTED MINERAL FILLER 100%
67 E	5/2/92	PLASTER, OLYMPIC POOL FACILITY BUILDING, FIRST FLOOR, OFFICER'S LOCKER ROOM, ROOM 1133	ASBESTOS NONE DETECTED MINERAL FILLER 80% OPAQUES 20%

TABLE 3 : BULK SAMPLE LOG

SAMPLE NO.	DATE	MATERIAL	RESULTS OF ANALYSIS
67 F	5/2/92	PLASTER, OLYMPIC POOL FACILITY BUILDING, FIRST FLOOR, STAIRWELL S-22	ASBESTOS NONE DETECTED MINERAL FILLER 90% OPAQUES 10%
67 G	5/2/92	PLASTER, OLYMPIC POOL FACILITY BUILDING, FIRST FLOOR, CUSTODIAL MAINTENANCE SUPPLY ROOM 1120	ASBESTOS NONE DETECTED MINERAL FILLER 90% OPAQUES 10%
68 A	5/2/92	PLASTER, MAIN BUILDING, ROOM 0025	ASBESTOS NONE DETECTED MINERAL FILLER 100%
68 B	5/2/92	PLASTER, MAIN BUILDING, ROOM 0016	ASBESTOS NONE DETECTED MINERAL FILLER 90% OPAQUES 10%
68 C	5/2/92	PLASTER, MAIN BUILDING, ROOM 0053	ASBESTOS NONE DETECTED MINERAL FILLER 100%
68 D	5/2/92	PLASTER, MAIN BUILDING, ROOM 0053	ASBESTOS NONE DETECTED MINERAL FILLER 100%
68 E	5/2/92	PLASTER, MAIN BUILDING, ROOM 1062	ASBESTOS NONE DETECTED MINERAL FILLER 90% OPAQUES 10%

TABLE 3 : BULK SAMPLE LOG

SAMPLE NO.	DATE	MATERIAL	RESULTS OF ANALYSIS
68 F	5/2/92	PLASTER, MAIN BUILDING, ROOM 1036	ASBESTOS NONE DETECTED MINERAL FILLER 100%
68 G	5/2/92	PLASTER, MAIN BUILDING, ROOM 1029	ASBESTOS NONE DETECTED MINERAL FILLER 100%
68 H	5/2/92	PLASTER, MAIN BUILDING, SECOND FLOOR BY S-13	ASBESTOS NONE DETECTED MINERAL FILLER 70% OPAQUES 30%
68 I	5/2/92	PLASTER, MAIN BUILDING, ROOM 3009	ASBESTOS NONE DETECTED MINERAL FILLER 80% OPAQUES 20%
68 J	5/2/92	PLASTER, MAIN BUILDING, ROOM 4012	ASBESTOS NONE DETECTED MINERAL FILLER 70% OPAQUES 30%
68 K	5/2/92	PLASTER, MAIN BUILDING, ROOM 4016	ASBESTOS NONE DETECTED MINERAL FILLER 90% OPAQUES 10%
68 L	5/2/92	PLASTER, MAIN BUILDING, FIFTH FLOOR BY S10	ASBESTOS NONE DETECTED MINERAL FILLER 80% OPAQUES 20%

TABLE 3 : BULK SAMPLE LOG

SAMPLE NO.	DATE	MATERIAL	RESULTS OF ANALYSIS
68 M	5/2/92	PLASTER, MAIN BUILDING, ROOM 5008	ASBESTOS NONE DETECTED MINERAL FILLER 100%

ATC Associates Inc.
104 E. 25th St., 10th Floor, New York, NY 10010-2917
(212) 353-8280 Fax (212) 353 8306

BULK ASBESTOS ANALYSIS RESULTS

Client : ATC Woburn

Project: 90712-60-001
West Point
Arvin Gym

Batch # : 10784
Date Collected : 3/27/98

SAMPLE INFORMATION	Asbestos Result	Fibrous Material	Non-Fibrous Material	NOB Result
Field # : 001 Date Analyzed: 3/31/98 Color : Light Blue Location : Basement corridor #A032 Type of Mat: 12x12 green/blue FT Homogenity : Y By : JA/RP Method : EPA-600/R-93/116 PLM.NOB-PLM/TEM	NONE-DETECTED			23.9 % Organic 4.6 % Residue 71.5 % Carbonate
Comment:				
Field # : 002 Date Analyzed: 3/31/98 Color : Black Location : Basement corridor #A032 Type of Mat: Mastic Homogenity : Y By : JA/RP Method : EPA-600/R-93/116 PLM.NOB-PLM/TEM	NONE-DETECTED			70.1 % Organic 26.3 % Residue 3.6 % Carbonate
Comment:				
Field # : 003 Date Analyzed: 3/31/98 Color : Yellow Location : Basement corridor #A032 Type of Mat: Cove-based mastic Homogenity : Y By : JA/RP Method : EPA-600/R-93/116 PLM.NOB-PLM/TEM	NONE-DETECTED			43.6 % Organic 1.6 % Residue 54.8 % Carbonate
Comment:				
Field # : 004 Date Analyzed: 3/31/98 Color : Tan Location : 1st floor B-112 corridor near P.T. Type of Mat: 12x12 lt tan w/ brown/white specks Homogenity : Y By : JA/RP Method : EPA-600/R-93/116 PLM.NOB-PLM/TEM	NONE-DETECTED			26.4 % Organic 15.2 % Residue 58.4 % Carbonate
Comment:				
Field # : 005 Date Analyzed: 3/31/98 Color : Yellow Location : 1st floor B-112 corridor near P.T. Type of Mat: Mastic Homogenity : Y By : JA/RP Method : EPA-600/R-93/116 PLM.NOB-PLM/TEM	NONE-DETECTED			61.6 % Organic 27.6 % Residue 10.8 % Carbonate
Comment:				

Legend: TRACE = LESS THAN LIMIT OF QUANTITATION (<0.25%)
Note 1: For point counts the limit of quantitation of 0.25% is based on one asbestos point counted over 400 non-empty points.
Note 2: >1% asbestos by weight is considered an ACM (Asbestos Containing Material).

Analyst:

Reviewed and Signed for the Company by:

Director of Laboratory Services

ATC Associates Inc.
104 E. 25th St., 10th Floor, New York, NY 10010-2917
(212) 353-8280 Fax (212) 353 8306

BULK ASBESTOS ANALYSIS RESULTS

lient : ATC Woburn

roject: 90712-60-001
West Point
Arvin Gym

Batch # : 10784
Date Collected : 3/27/98

SAMPLE INFORMATION	Asbestos Result	Fibrous Material	Non-Fibrous Material	NOB Result
ield # : 006 Date Analyzed: 3/31/98)lor : Yellow)cation : 1st floor B-112 corridor near P.T. ype of Mat: Cove based mastic)mogenity : Y By : JA/RP ethod : ELAP+EPA PLM,NOB-PLM/TEM	Trace% CHRYSOTILE			41.2 % Organic 9.8 % Residue 49.0 % Carbonate
Comment:				
ield # : 007 Date Analyzed: 3/31/98)lor : Black)cation : 3rd flr strge closet adj to catwalk ype of Mat: 9x9 black FT)mogenity : Y By : JA eth : ELAP+EPA PLM	10 % CHRYSOTILE	1 % Cellulose	42 % Mineral Filler 47 % Organic Binders	
Comment:				
eld # : 008 Date Analyzed: 3/31/98)lor : Black)cation : 3rd floor N gym projection rm #3004 ype of Mat: Mastic)mogenity : Y By : JA thod : ELAP+EPA PLM	5 % CHRYSOTILE	3 % Cellulose	30 % Mineral Filler 62 % Organic Binders	
Comment:				
eld # : 009 Date Analyzed: 3/31/98)lor : Tan)cation : 3rd floor above N gym ype of Mat: Brick tile glue dab)mogenity : Y By : JA thod : ELAP+EPA PLM	NONE-DETECTED	2 % Cellulose	98 % Mineral Filler	
Comment:				
eld # : 010 Date Analyzed: 3/31/98)lor : Off White)cation : 3rd floor above N gym ype of Mat: Pipe insulation)mogenity : Y By : JA thod : ELAP+EPA PLM	27 % AMOSITE 9 % CROCIDOLITE	1 % Cellulose	63 % Mineral Filler	
Comment:				

Legend: TRACE = LESS THAN LIMIT OF QUANTITATION (<0.25%)
Note 1: For point counts the limit of quantitation of 0.25% is based on one asbestos point counted over 400 non-empty points.
Note 2: >1% asbestos by weight is considered an ACM (Asbestos Containing Material).

Analyst:

Reviewed and Signed for the Company by:

Director of Laboratory Services

ATC Associates Inc.
104 E. 25th St., 10th Floor, New York, NY 10010-2917
(212) 353-8280 Fax (212) 353 8306

BULK ASBESTOS ANALYSIS RESULTS

Client : ATC Woburn

Project: 90712-60-001
West Point
Arvin Gym

Batch # : 10784
Date Collected : 3/27/98

SAMPLE INFORMATION	Asbestos Result	Fibrous Material	Non-Fibrous Material	NOB Result
Field # : 012 Date Analyzed: 3/31/98 Color : Tan Location : 3rd floor above N gym Type of Mat: 2x2 drop ceiling Homogenity : Y By : JA Method : ELAP+EPA PLM	NONE-DETECTED	48 % Cellulose 38 % Fiberglass	14 % Mineral Filler	
Comment:				
Field # : 013 Date Analyzed: 3/31/98 Color : Tan Location : 3rd floor above N gym Type of Mat: Cinder block mortar H enity : Y By : JA M d : ELAP+EPA PLM	NONE-DETECTED		100 % Mineral Filler	
Comment:				
Field # : 014 Date Analyzed: 3/31/98 Color : Tan Location : 3rd floor office area #3010 Type of Mat: 2x4 drop ceiling Homogenity : Y By : JA Method : ELAP+EPA PLM	NONE-DETECTED	43 % Cellulose 40 % Fiberglass	17 % Mineral Filler	
Comment:				
Field # : 015 Date Analyzed: 3/31/98 Color : Brown Location : 3rd floor corridor #3027 Type of Mat: Cove based mastic Homogenity : Y By : JA/RP Method : ELAP+EPA PLM,NOB-PLM/TEM	NONE-DETECTED			49.6 % Organic 46.3 % Residue 4.1 % Carbonate
Comment:				
Field # : 016 Date Analyzed: 3/31/98 Color : Black Location : 3rd floor corridor #3040 Type of Mat: Dust vacuum in vents insulation Homogenity : Y By : JA Method : ELAP+EPA PLM	NONE-DETECTED	48 % Cellulose 2 % Fiberglass 27 % Synthetic	23 % Mineral Filler	
Comment:				

Legend: TRACE = LESS THAN LIMIT OF QUANTITATION (<0.25%)
Note 1: For point counts the limit of quantitation of 0.25% is based on one asbestos point counted over 400 non-empty points.
Note 2: >1% asbestos by weight is considered an ACM (Asbestos Containing Material).

Analyst:

Reviewed and Signed for the Company by:

Director of Laboratory Services

ATC Associates Inc.
104 E. 25th St., 10th Floor, New York, NY 10010-2917
(212) 353-8280 Fax (212) 353 8306

BULK ASBESTOS ANALYSIS RESULTS

Client : ATC Woburn

Project: 90712-60-001
West Point
Arvin Gym

Batch # . 10734
Date Collected : 3/27/98

SAMPLE INFORMATION	Asbestos Result	Fibrous Material	Non-Fibrous Material	NOB Result
Field # : 017 Date Analyzed: 3/31/98 Color : Off White Location : 3rd flr corr #3040 squash gallery Type of Mat: Plaster ceiling skim coat Homogenity : Y By : JA Method : ELAP+EPA PLM	NONE-DETECTED		98 % Mineral Filler 2 % Paint	
Comment:				
Field # : 018 Date Analyzed: 3/31/98 Color : Tan Location : 3rd flr corr #3040 squash gallery Type of Mat: Plaster ceiling brown coat Homogenity : Y By : JA Method : ELAP+EPA PLM	NONE-DETECTED	Trace% Cellulose	100 % Mineral Filler	
Comment:				
Field # : 019 Date Analyzed: 3/31/98 Color : Off White Location : 3rd flr corr #3040 squash gallery Type of Mat: Plaster ceiling skim coat Homogenity : Y By : JA Method : ELAP+EPA PLM	NONE-DETECTED		97 % Mineral Filler 3 % Paint	
Comment:				
Field # : 020 Date Analyzed: 3/31/98 Color : Tan Location : 3rd flr corr #3040 squash gallery Type of Mat: Plaster ceiling skim coat Homogenity : Y By : JA Method : ELAP+EPA PLM	NONE-DETECTED		100 % Mineral Filler	
Comment:				
Field # : 021 Date Analyzed: 3/31/98 Color : Brown Location : 3rd floor free weights #3033 Type of Mat: 12x12 stick on ceiling tile Homogenity : Y By : JA Method : ELAP+EPA PLM	NONE-DETECTED	95 % Cellulose	4 % Mineral Filler 1 % Paint	
Comment:				

Legend: TRACE = LESS THAN LIMIT OF QUANTITATION (<0.25%)
Note 1: For point counts the limit of quantitation of 0.25% is based on one asbestos point counted over 400 non-empty points.
Note 2: > 1% asbestos by weight is considered an ACM (Asbestos Containing Material).

Analyst:

Reviewed and Signed for the Company by:

Director of Laboratory Services

ATC Associates Inc.
104 E. 25th St., 10th Floor, New York, NY 10010-2917
(212) 353-8280 Fax (212) 353 8306

BULK ASBESTOS ANALYSIS RESULTS

Client : ATC Woburn

Project: 90712-60-001
West Point
Arvin Gym

Batch # : 10784
Date Collected : 3/27/98

SAMPLE INFORMATION	Asbestos Result	Fibrous Material	Non-Fibrous Material	NOB Result
Field # : 022 Date Analyzed: 3/31/98 Color : Brown Location : 3rd floor freeweights #3033 Type of Mat: 12x12 glue dab Homogenity : Y By : JA/RP Method : ELAP+EPA PLM.NOB-PLM/TEM	NONE-DETECTED			59.0 % Organic 39.4 % Residue 1.6 % Carbonate
Comment:				
Field # : 023 Date Analyzed: 3/31/98 Color : Black Location : 4th floor gym locker room #4003 Type of Mat: Black metal pipe coating Homogenity : Y By : JA Method : ELAP+EPA PLM	NONE-DETECTED	2 % Cellulose	18 % Mineral Filler 80 % Organic Binders	
Comment: Not enough for gravimetric				
Field # : 024 Date Analyzed: 3/31/98 Color : Gray Location : 4th floor break room #4026 Type of Mat: 9x9 gray w/ orange FT Homogenity : Y By : JA Method : ELAP+EPA PLM	8 % CHRYSOTILE	2 % Cellulose	40 % Mineral Filler 50 % Organic Binders	
Comment:				
Field # : 025 Date Analyzed: 3/31/98 Color : Black Location : 4th floor break room #4026 Type of Mat: Mastic Homogenity : Y By : JA/RP Method : ELAP+EPA PLM.NOB-PLM/TEM	NONE-DETECTED			70.4 % Organic 21.6 % Residue 8.0 % Carbonate
Comment:				
Field # : 026 Date Analyzed: 3/31/98 Color : Brown Location : 4th floor break room #4026 Type of Mat: 12x12 stick on ceiling tile Homogenity : Y By : JA Method : ELAP+EPA PLM	NONE-DETECTED	96 % Cellulose	3 % Mineral Filler 1 % Paint	
Comment:				

Legend: TRACE = LESS THAN LIMIT OF QUANTITATION (<0.25%)
Note 1: For point counts the limit of quantitation of 0.25% is based on one asbestos point counted over 400 non-empty points.
Note 2: > 1% asbestos by weight is considered an ACM (Asbestos Containing Material).

Analyst:

Reviewed and Signed for the Company by:

Director of Laboratory Services

ATC Associates Inc.
104 E. 25th St., 10th Floor, New York, NY 10010-2917
(212) 353-8280 Fax (212) 353 8306

BULK ASBESTOS ANALYSIS RESULTS

lient : ATC Woburn

roject: 90712-60-001
West Point
Arvin Gym

Batch # : 10784
Date Collected : 3/27/98

SAMPLE INFORMATION	Asbestos Result	Fibrous Material	Non-Fibrous Material	NOB Result
ield # : 027 Date Analyzed: 3/31/98 olor : Brown ocation : 4th floor break room #4026 ype of Mat: 12x12 glue dab omogenity : Y By : JA/RP ethod : ELAP+EPA PLM.NOB-PLM/TEM	NONE-DETECTED			55.5 % Organic 44.5 % Residue 0.0 % Carbonate
Comment:				
ield # : 028 Date Analyzed: 3/31/98 olor : Brown ocation : 4th floor break room #4026 ype of Mat: 6x12 brown FT omogenity : Y By : JA/RP ethod : ELAP+EPA PLM.NOB-PLM/TEM	4.3 % CHRYSOTILE			29.5 % Organic 17.2 % Residue 49.0 % Carbonate
Comment:				
ield # : 029 Date Analyzed: 3/31/98 olor : Black ocation : 4th floor break room #4026 ype of Mat: Mastic omogenity : Y By : JA/RP ethod : ELAP+EPA PLM.NOB-PLM/TEM	NONE-DETECTED			74.4 % Organic 16.7 % Residue 8.9 % Carbonate
Comment:				

Legend: TRACE = LESS THAN LIMIT OF QUANTITATION (<0.25%)
Note 1: For point counts the limit of quantitation of 0.25% is based on one asbestos point counted over 400 non-empty points.
Note 2: >1% asbestos by weight is considered an ACM (Asbestos Containing Material).

Analyst: JA

Reviewed and Signed for the Company by:

Director of Laboratory Services

BULK ASBESTOS ANALYSIS RESULTS

PLM Analysis Methodology

The samples were analyzed by industry accepted methods in accordance with EPA and ELAP methods using Polarized Light Microscopy (PLM) with dispersion staining in conjunction with stereoscopical analysis. Point counts are performed on samples regulated by these agencies. The Environmental Laboratory Approval Program (ELAP) has determined that analysis of non-friable organically bound materials (i.e. floor tile, roofing, etc.) is not reliable when performed by Polarized Light Microscopy (PLM) method. Therefore, if this analysis included that of non-friable materials under PLM and the results were negative, ATC must add this disclaimer to maintain our ELAP accreditation:

"Polarized light microscopy is not consistently reliable in detecting asbestos in floor coverings and similar non-friable organically bound materials. Quantitative Transmission Electron Microscopy is currently the only method that can be used to determine if this material can be considered or treated as non-asbestos containing".

Samples that are layered and analyzed by the gravimetric method as composites (NESHAP, AHERA) should be considered positive if results are between trace and 1%, unless every layer is analyzed separately.

ATC has the capability of performing TEM confirmation if so desired.

All bulk sample reports are checked and reviewed two times. Unused portions of samples are archived for three months unless client requests special handling. This report must not be used by the client to claim product endorsement by NIST or any agency of the U.S. government.

ATC Associates Inc. is not responsible for sample collection and analytical procedures not performed by our laboratory. This report may not be reproduced in part without the laboratory permission.

ATC Associates will not be liable for analytical results from samples that are not prepared according to the standard methods (EPA, ELAP, etc.) used by the laboratory (e.g. composite samples from different locations or samples with insufficient volumes).

Laboratory Equipment

Laboratory analysis was accomplished utilizing Olympus BH-2 Microscopes.

Quality Control

ATC Associates Inc. is accredited by NVLAP (Lab Code 1187-00) and NY State DOH ELAP (Lab ID 10879) for bulk and air fiber analyses. ATC participates in the Bulk Asbestos Sample Quality Assurance Programs for NVLAP and ELAP and maintains an in-house QC/QA program for bulk samples whereby 10% of all submitted samples are reanalyzed and documented in a Quality Control Manual. ATC also participates in a quarterly round robin QC/QA program for bulk samples with several accredited laboratories throughout the United States. Current and past QC/QA program results are available in the laboratory for inspection.

Accuracy and Precision

The phase abundances provided by point count may be considered within the limits of variability inherent in the method employed. The sample results are accurate to within +/-5-10 percent measured by the calibrated visual estimate method. For point counts the detection limit of 0.25% is based on one asbestos point counted over 400 non-empty points.

The analyses were supervised by Milena Lowd, Director of Laboratory Services, who has extensive experience in asbestos analysis by PLM and other methods. Please contact me regarding any questions relating to these materials at 212-353-8280 Ext. 247.

Sincerely,

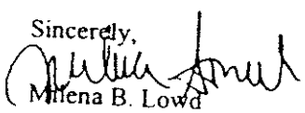

Milena B. Lowd
Director of Laboratory Services

ATC Associates Inc.
104 E. 25th St., 10th Floor, New York, NY 10010-2917
(212) 353-8280 Fax (212) 353 8306

BULK ASBESTOS ANALYSIS RESULTS

lient : ATC Woburn

roject: 90712-60-001
West Point
Arvin Gym

Batch # : 10833
Date Collected : 4/01/98

SAMPLE INFORMATION	Asbestos Result	Fibrous Material	Non-Fibrous Material	NOB Result
ield # : 001 Date Analyzed: 4/06/98 olor : White ocation : 5th floor plaster ceiling ype of Mat: Plaster white coat omogenity : Y By : MW ethod : ELAP+EPA PLM	NONE-DETECTED	Trace% Cellulose	98 % Mineral Filler 2 % Paint	
Comment:				
ield # : 002 Date Analyzed: 4/06/98 olor : Tan ocation : 5th plaster ceiling ype of Mat: Plaster brown coat don. omogenity : Y By : MW ethod : ELAP+EPA PLM	NONE-DETECTED	Trace% Cellulose	100 % Mineral Filler	
Comment:				
ield # : 003 Date Analyzed: 4/06/98 olor : Tan ocation : 6th floor mech. room ype of Mat: Troweled-on plaster omogenity : Y By : MW ethod : ELAP+EPA PLM	NONE-DETECTED	Trace% Cellulose	90 % Mineral Filler 10 % Perlite	
Comment:				
ield # : 04 Date Analyzed: 4/06/98 olor : Tan ocation : 3rd floor room #3026A ype of Mat: 12x12 cream w/ gray streaks FT omogenity : Y By : MW/RP ethod : ELAP+EPA PLM.NOB-PLM/TEM	Trace% CHRYSOTILE			25.8 % Organic 5.9 % Residue 68.3 % Carbonate
Comment:				
ield # : 05 Date Analyzed: 4/06/98 olor : Black ocation : 3rd floor room #3026A ype of Mat: Mastic omogenity : Y By : MW/RP ethod : ELAP+EPA PLM.NOB-PLM/TEM	NONE-DETECTED			90.0 % Organic 7.9 % Residue 2.1 % Carbonate
Comment:				

Legend: TRACE = LESS THAN LIMIT OF QUANTITATION (<0.25%)
Note 1: For point counts the limit of quantitation of 0.25% is based on one asbestos point counted over 400 non-empty points.
Note 2: >1% asbestos by weight is considered an ACM (Asbestos Containing Material).

Analyst:

Reviewed and Signed for the Company by:

Director of Laboratory Services

ATC Associates Inc.
104 E. 25th St., 10th Floor, New York, NY 10010-2917
(212) 353-8280 Fax (212) 353 8306

BULK ASBESTOS ANALYSIS RESULTS

Client : ATC Woburn

Project: 90712-60-001
West Point
Arvin Gym

Batch # : 10833
Date Collected : 4/01/98

SAMPLE INFORMATION	Asbestos Result	Fibrous Material	Non-Fibrous Material	NOB Result
ield # : 06 Date Analyzed: 4/06/98 olor : Black/Gray ocation : 3rd floor mech. room #3035 ype of Mat: HVAC gasket material omogenity : N By : MW/RP ethod : EPA-600/R-93/116 PLM,NOB-PLM/TEM	NONE-DETECTED			59.9 % Organic 4.0 % Residue 36.1 % Carbonate
Comment: Layers not separable				
ield # : 07 Date Analyzed: 4/06/98 olor : Blue ocation : 3rd floor mech. room #3026 ype of Mat: 9x9 sky blue and white fit omogenity : Y By : MW ethod : EPA-600/R-93/116 PLM	10 % CHRYSOTILE	Trace% Cellulose	50 % Mineral Filler 40 % Organic Binders	
Comment:				
: 08 Date Analyzed: 4/06/98 : Blue ocation : 3rd floor mech. room #3026 ype of Mat: Mastic room #3026 omogenity : Y By : MW/RP thod : EPA-600/R-93/116 PLM,NOB-PLM/TEM	NONE-DETECTED			85.6 % Organic 9.6 % Residue 4.8 % Carbonate
Comment:				

Legend: TRACE = LESS THAN LIMIT OF QUANTITATION (<0.25%)
Note 1: For point counts the limit of quantitation of 0.25% is based on one asbestos point counted over 400 non-empty points.
Note 2: > 1% asbestos by weight is considered an ACM (Asbestos Containing Material).

Analyst: MW 4/6/98

Reviewed and Signed for the Company by:

Director of Laboratory Services

BULK ASBESTOS ANALYSIS RESULTS

PLM Analysis Methodology

The samples were analyzed by industry accepted methods in accordance with EPA and ELAP methods using Polarized Light Microscopy (PLM) with dispersion staining in conjunction with stereoscopical analysis. Point counts are performed on samples regulated by these agencies. The Environmental Laboratory Approval Program (ELAP) has determined that analysis of non-friable organically bound materials (i.e. floor tile, roofing, etc.) is not reliable when performed by Polarized Light Microscopy (PLM) method. Therefore, if this analysis included that of non-friable materials under PLM and the results were negative, ATC must add this disclaimer to maintain our ELAP accreditation:

> "Polarized light microscopy is not consistently reliable in detecting asbestos in floor coverings and similar non-friable organically bound materials. Quantitative Transmission Electron Microscopy is currently the only method that can be used to determine if this material can be considered or treated as non-asbestos containing".

Samples that are layered and analyzed by the gravimetric method as composites (NESHAP, AHERA) should be considered positive if results are between trace and 1%, unless every layer is analyzed separately.

ATC has the capability of performing TEM confirmation if so desired.

All bulk sample reports are checked and reviewed two times. Unused portions of samples are archived for three months unless client requests special handling. This report must not be used by the client to claim product endorsement by NIST or any agency of the U.S. government.

ATC Associates Inc. is not responsible for sample collection and analytical procedures not performed by our laboratory. This report may not be reproduced in part without the laboratory permission.

ATC Associates will not be liable for analytical results from samples that are not prepared according to the standard methods (EPA, ELAP, etc.) used by the laboratory (e.g. composite samples from different locations or samples with insufficient volumes).

Laboratory Equipment

Laboratory analysis was accomplished utilizing Olympus BH-2 Microscopes.

Quality Control

ATC Associates Inc. is accredited by NVLAP (Lab Code 1187-00) and NY State DOH ELAP (Lab ID 10879) for bulk and air fiber analyses. ATC participates in the Bulk Asbestos Sample Quality Assurance Programs for NVLAP and ELAP and maintains an in-house QC/QA program for bulk samples whereby 10% of all submitted samples are reanalyzed and documented in a Quality Control Manual. ATC also participates in a quarterly round robin QC/QA program for bulk samples with several accredited laboratories throughout the United States. Current and past QC/QA program results are available in the laboratory for inspection.

Accuracy and Precision

The phase abundances provided by point count may be considered within the limits of variability inherent in the method employed. The sample results are accurate to within +/-5-10 percent measured by the calibrated visual estimate method. For point counts the detection limit of 0.25% is based on one asbestos point counted over 400 non-empty points.

The analyses were supervised by Milena Lowd, Director of Laboratory Services, who has extensive experience in asbestos analysis by PLM and other methods. Please contact me regarding any questions relating to these materials at 212-353-8280 Ext. 247.

Sincerely,

Milena B. Lowd
Director of Laboratory Services

ATC Associates Inc.
104 E. 25th St., 10th Floor, New York, NY 10010-2917
(212) 353-8280 Fax (212) 353 8306

BULK ASBESTOS ANALYSIS RESULTS

Client : ATC Woburn

Project: 90712-60-001
West Point
Arvin Gym

Batch # : 10886
Date Collected : 4/09/98

SAMPLE INFORMATION	Asbestos Result	Fibrous Material	Non-Fibrous Material	NOB Result
Field # : 001 Date Analyzed: 4/10/98 Color : Black Location : Roof from core ARB5-1 Type of Mat: Black vapor barrier Homogenity : Y By : YP/RP Method : ELAP+EPA PLM,NOB-PLM/TEM	NONE-DETECTED			44.1 % Organic 35.7 % Residue 20.2 % Carbonate
Comment:				
Field # : 002 Date Analyzed: 4/10/98 Color : Yellow Location : Roof from core ARB4.2 Type of Mat: Yellow sponge material genity : Y By : YP od : ELAP+EPA PLM	NONE-DETECTED	100 % Foam		
Comment:				
ield # : 003 Date Analyzed: 4/10/98 Color : Black Location : Roof from core ARB4.2 Type of Mat: Black vapor barrier Homogenity : Y By : YP/RP Method : ELAP+EPA PLM,NOB-PLM/TEM	Trace% CHRYSOTILE			88.2 % Organic 6.7 % Residue 7.1 % Carbonate
Comment:				
Field # : 004 Date Analyzed: 4/10/98 Color : Black Location : Roof from core ARB.2 Type of Mat: Black tar-like material Homogenity : Y By : YP Method : ELAP+EPA PLM/PREP	NONE-DETECTED			95.9 % Organic 0.0 % Residue 4.1 % Carbonate
Comment:				
Field # : 005 Date Analyzed: 4/10/98 Color : Yellow Location : Roof from core ERB5.1 Type of Mat: Light yellow sponge material Homogenity : Y By : YP Method : ELAP+EPA PLM	NONE-DETECTED	100 % Foam		
Comment:				

Legend: TRACE = LESS THAN LIMIT OF QUANTITATION (<0.25%)
Note 1: For point counts the limit of quantitation of 0.25% is based on one asbestos point counted over 400 non-empty points.
Note 2: >1% asbestos by weight is considered an ACM (Asbestos Containing Material).

nalyst:

Reviewed and Signed for the Company by:

Director of Laboratory Services

ATC Associates Inc.
104 E. 25th St., 10th Floor, New York, NY 10010-2917
(212) 353-8280 Fax (212) 353 8306

BULK ASBESTOS ANALYSIS RESULTS

Client : ATC Woburn

Project: 90712-60-001
West Point
Arvin Gym

Batch # : 10886
Date Collected : 4/09/98

SAMPLE INFORMATION	Asbestos Result	Fibrous Material	Non-Fibrous Material	NOB Result
Field # : 006 Date Analyzed: 4/10/98 Color : Black Location : Roof from core ERB5.1 Type of Mat: Black-shiny tar material Homogenity : Y By : YP Method : ELAP+EPA PLM/PREP	NONE-DETECTED			97.0 % Organic 0.4 % Residue 2.6 % Carbonate
Comment:				
Field # : 007 Date Analyzed: 4/10/98 Color : Black Location : Roof from core ERB5.1 Type of Mat: Black stringlike rubbery material Homogenity : Y By : YP/RP Method : ELAP+EPA PLM,NOB-PLM/TEM	NONE-DETECTED			94.1 % Organic 1.8 % Residue 4.1 % Carbonate
Comment:				
Field # : 008 Date Analyzed: 4/10/98 Color : Black Location : 2nd floor squash court #9 C-2 2044 Type of Mat: Black tar felt Homogenity : Y By : YP Method : ELAP+EPA PLM/PREP	NONE-DETECTED			95.4 % Organic 0.0 % Residue 4.6 % Carbonate
Comment:				
Field # : 009 Date Analyzed: 4/10/98 Color : Black Location : 2nd floor squash court #7 C-2 2034 Type of Mat: Black tar felt Homogenity : Y By : YP Method : ELAP+EPA PLM/PREP	NONE-DETECTED			96.4 % Organic 0.0 % Residue 3.6 % Carbonate
Comment:				

Legend: TRACE = LESS THAN LIMIT OF QUANTITATION (<0.25%)
Note 1: For point counts the limit of quantitation of 0.25% is based on one asbestos point counted over 400 non-empty points.
Note 2: > 1% asbestos by weight is considered an ACM (Asbestos Containing Material).

Analyst:

Reviewed and Signed for the Company by:

Director of Laboratory Services

BULK ASBESTOS ANALYSIS RESULTS

PLM Analysis Methodology

The samples were analyzed by industry accepted methods in accordance with EPA and ELAP methods using Polarized Light Microscopy (PLM) with dispersion staining in conjunction with stereoscopical analysis. Point counts are performed on samples regulated by these agencies. The Environmental Laboratory Approval Program (ELAP) has determined that analysis of non-friable organically bound materials (i.e. floor tile, roofing, etc.) is not reliable when performed by Polarized Light Microscopy (PLM) method. Therefore, if this analysis included that of non-friable materials under PLM and the results were negative, ATC must add this disclaimer to maintain our ELAP accreditation:

> "Polarized light microscopy is not consistently reliable in detecting asbestos in floor coverings and similar non-friable organically bound materials. Quantitative Transmission Electron Microscopy is currently the only method that can be used to determine if this material can be considered or treated as non-asbestos containing".

Samples that are layered and analyzed by the gravimetric method as composites (NESHAP, AHERA) should be considered positive if results are between trace and 1%, unless every layer is analyzed separately.

ATC has the capability of performing TEM confirmation if so desired.

All bulk sample reports are checked and reviewed two times. Unused portions of samples are archived for three months unless client requests special handling. This report must not be used by the client to claim product endorsement by NIST or any agency of the U.S. government.

ATC Associates Inc. is not responsible for sample collection and analytical procedures not performed by our laboratory. This report may not be reproduced in part without the laboratory permission.

ATC Associates will not be liable for analytical results from samples that are not prepared according to the standard methods (EPA, ELAP, etc.) used by the laboratory (e.g. composite samples from different locations or samples with insufficient volumes).

Laboratory Equipment

Laboratory analysis was accomplished utilizing Olympus BH-2 Microscopes.

Quality Control

ATC Associates Inc. is accredited by NVLAP (Lab Code 1187-00) and NY State DOH ELAP (Lab ID 10879) for bulk and air fiber analyses. ATC participates in the Bulk Asbestos Sample Quality Assurance Programs for NVLAP and ELAP and maintains an in-house QC/QA program for bulk samples whereby 10% of all submitted samples are reanalyzed and documented in a Quality Control Manual. ATC also participates in a quarterly round robin QC/QA program for bulk samples with several accredited laboratories throughout the United States. Current and past QC/QA program results are available in the laboratory for inspection.

Accuracy and Precision

The phase abundances provided by point count may be considered within the limits of variability inherent in the method employed. The sample results are accurate to within +/-5-10 percent measured by the calibrated visual estimate method. For point counts the detection limit of 0.25% is based on one asbestos point counted over 400 non-empty points.

The analyses were supervised by Milena Lowd, Director of Laboratory Services, who has extensive experience in asbestos analysis by PLM and other methods. Please contact me regarding any questions relating to these materials at 212-353-8280 Ext. 247.

Sincerely,

Milena B. Lowd
Director of Laboratory Services

ATC Associates Inc.
104 E. 25th St., 10th Floor, New York, NY 10010-2917
(212) 353-8280 Fax (212) 353 8306

BULK ASBESTOS ANALYSIS RESULTS

Client : ATC Woburn

Project: 90712-60-001
West Point
Arvin Gym

Batch # : 10877
Date Collected : 4/08/98

SAMPLE INFORMATION	Asbestos Result	Fibrous Material	Non-Fibrous Material	NOB Result
Field # : 1 Date Analyzed: 4/09/98 Color : Black Location : 2nd flr central gym in lite vault Type of Mat: Putty sealant Homogenity : Y By : EC Method : ELAP+EPA PLM	24 % CHRYSOTILE	6 % Cellulose	10 % Mineral Filler 60 % Organic Binders	
Comment:				
Field # : 2 Date Analyzed: 4/09/98 Color : Black/Brown Location : 2nd floor N gym under wood Type of Mat: Tar Homogenity : N By : EC/RP Method : ELAP+EPA PLM,NOB-PLM/TEM	NONE-DETECTED			75.1 % Organic 18.0 % Residue 6.9 % Carbonate
Comment:				
Field # : 3 Date Analyzed: 4/09/98 Color : Brown Location : 2nd floor hole in Hays gym floor Type of Mat: Debris Homogenity : N By : EC Method : ELAP+EPA PLM	NONE-DETECTED	50 % Cellulose 1 % Fiberglass	49 % Mineral Filler	
Comment:				

Legend: TRACE = LESS THAN LIMIT OF QUANTITATION (<0.25%)
Note 1: For point counts the limit of quantitation of 0.25% is based on one asbestos point counted over 400 non-empty points.
Note 2: > 1% asbestos by weight is considered an ACM (Asbestos Containing Material).

Analyst: A

Reviewed and Signed for the Company by:

Director of Laboratory Services

BULK ASBESTOS ANALYSIS RESULTS

PLM Analysis Methodology

The samples were analyzed by industry accepted methods in accordance with EPA and ELAP methods using Polarized Light Microscopy (PLM) with dispersion staining in conjunction with stereoscopical analysis. Point counts are performed on samples regulated by these agencies. The Environmental Laboratory Approval Program (ELAP) has determined that analysis of non-friable organically bound materials (i.e. floor tile, roofing, etc.) is not reliable when performed by Polarized Light Microscopy (PLM) method. Therefore, if this analysis included that of non-friable materials under PLM and the results were negative, ATC must add this disclaimer to maintain our ELAP accreditation:

> "Polarized light microscopy is not consistently reliable in detecting asbestos in floor coverings and similar non-friable organically bound materials. Quantitative Transmission Electron Microscopy is currently the only method that can be used to determine if this material can be considered or treated as non-asbestos containing".

Samples that are layered and analyzed by the gravimetric method as composites (NESHAP, AHERA) should be considered positive if results are between trace and 1%, unless every layer is analyzed separately.

ATC has the capability of performing TEM confirmation if so desired.

All bulk sample reports are checked and reviewed two times. Unused portions of samples are archived for three months unless client requests special handling. This report must not be used by the client to claim product endorsement by NIST or any agency of the U.S. government.

ATC Associates Inc. is not responsible for sample collection and analytical procedures not performed by our laboratory. This report may not be reproduced in part without the laboratory permission.

ATC Associates will not be liable for analytical results from samples that are not prepared according to the standard methods (EPA, ELAP, etc.) used by the laboratory (e.g. composite samples from different locations or samples with insufficient volumes).

Laboratory Equipment

Laboratory analysis was accomplished utilizing Olympus BH-2 Microscopes.

Quality Control

ATC Associates Inc. is accredited by NVLAP (Lab Code 1187-00) and NY State DOH ELAP (Lab ID 10879) for bulk and air fiber analyses. ATC participates in the Bulk Asbestos Sample Quality Assurance Programs for NVLAP and ELAP and maintains an in-house QC/QA program for bulk samples whereby 10% of all submitted samples are reanalyzed and documented in a Quality Control Manual. ATC also participates in a quarterly round robin QC/QA program for bulk samples with several accredited laboratories throughout the United States. Current and past QC/QA program results are available in the laboratory for inspection.

Accuracy and Precision

The phase abundances provided by point count may be considered within the limits of variability inherent in the method employed. The sample results are accurate to within +/-5-10 percent measured by the calibrated visual estimate method. For point counts the detection limit of 0.25% is based on one asbestos point counted over 400 non-empty points.

The analyses were supervised by Milena Lowd, Director of Laboratory Services, who has extensive experience in asbestos analysis by PLM and other methods. Please contact me regarding any questions relating to these materials at 212-353-8280 Ext. 247.

Sincerely,

Milena B. Lowd
Director of Laboratory Services

ATC Associates Inc.
104 E. 25th St., 10th Floor, New York, NY 10010-2917
(212) 353-8280 Fax (212) 353 8306

BULK ASBESTOS ANALYSIS RESULTS

Client : ATC Peekskill

Project: 90712-60
Westpoint
Arvin Gym

Batch # : 10719
Date Collected : 3/24/98

SAMPLE INFORMATION	Asbestos Result	Fibrous Material	Non-Fibrous Material	NOB Result
Field # : 001 Date Analyzed: 3/25/98 Color : Black Location : 6th floor outside tunnel exit Type of Mat: Vapor barrier Homogenity : Y By : EC/MP Method : ELAP+EPA PLM,NOB-PLM/TEM	NONE-DETECTED			61.5 % Organic 36.7 % Residue 1.8 % Carbonate
Comment:				
Field # : 002 Date Analyzed: 3/25/98 Color : Black Location : 6th floor outside around CNR Type of Mat: Vapor barrier Homogenity : Y By : EC/MP Method : ELAP+EPA PLM,NOB-PLM/TEM	NONE-DETECTED			95.7 % Organic 3.9 % Residue 0.4 % Carbonate
Comment:				
Field # : 003 Date Analyzed: 3/25/98 Color : Tan Location : 6th floor outside of main lobby Type of Mat: Putty Homogenity : Y By : EC/MP Method : ELAP+EPA PLM,NOB-PLM/TEM	NONE-DETECTED			52.9 % Organ. 2.6 % Residue 44.5 % Carbonate
Comment:				
Field # : 004 Date Analyzed: 3/25/98 Color : Black Location : 6th floor across from green gate Type of Mat: Vapor barrier Homogenity : Y By : EC Method : ELAP+EPA PLM/PREP	NONE-DETECTED			97.8 % Organic 0.6 % Residue 1.6 % Carbonate
Comment: Total residue less than 1%				
Field # : 005 Date Analyzed: 3/25/98 Color : Tan Location : 6th floor CNR of bldg. Type of Mat: Sidewalk putty Homogenity : Y By : EC/MP Method : ELAP+EPA PLM,NOB-PLM/TEM	NONE-DETECTED			87.9 % Organic 5.4 % Residue 6.7 % Carbonate
Comment:				

Legend: TRACE = LESS THAN LIMIT OF QUANTITATION (<0.25%)
Note 1: For point counts the limit of quantitation of 0.25% is based on one asbestos point counted over 400 non-empty points.
Note 2: >1% asbestos by weight is considered an ACM (Asbestos Containing Material).

Analyst:

EC/MP

Reviewed and Signed for the Company by:

Director of Laboratory Services

BULK ASBESTOS ANALYSIS RESULTS

PLM Analysis Methodology

The samples were analyzed by industry accepted methods in accordance with EPA and ELAP methods using Polarized Light Microscopy (PLM) with dispersion staining in conjunction with stereoscopical analysis. Point counts are performed on samples regulated by these agencies. The Environmental Laboratory Approval Program (ELAP) has determined that analysis of non-friable organically bound materials (i.e. floor tile, roofing, etc.) is not reliable when performed by Polarized Light Microscopy (PLM) method. Therefore, if this analysis included that of non-friable materials under PLM and the results were negative, ATC must add this disclaimer to maintain our ELAP accreditation:

> "Polarized light microscopy is not consistently reliable in detecting asbestos in floor coverings and similar non-friable organically bound materials. Quantitative Transmission Electron Microscopy is currently the only method that can be used to determine if this material can be considered or treated as non-asbestos containing".

Samples that are layered and analyzed by the gravimetric method as composites (NESHAP, AHERA) should be considered positive if results are between trace and 1%, unless every layer is analyzed separately.

ATC has the capability of performing TEM confirmation if so desired.

All bulk sample reports are checked and reviewed two times. Unused portions of samples are archived for three months unless client requests special handling. This report must not be used by the client to claim product endorsement by NIST or any agency of the U.S. government.

ATC Associates Inc. is not responsible for sample collection and analytical procedures not performed by our laboratory. This report may not be reproduced in part without the laboratory permission.

ATC Associates will not be liable for analytical results from samples that are not prepared according to the standard methods (EPA, ELAP, etc.) used by the laboratory (e.g. composite samples from different locations or samples with insufficient volumes).

Laboratory Equipment

Laboratory analysis was accomplished utilizing Olympus BH-2 Microscopes.

Quality Control

ATC Associates Inc. is accredited by NVLAP (Lab Code 1187-00) and NY State DOH ELAP (Lab ID 10879) for bulk and air fiber analyses. ATC participates in the Bulk Asbestos Sample Quality Assurance Programs for NVLAP and ELAP and maintains an in-house QC/QA program for bulk samples whereby 10% of all submitted samples are reanalyzed and documented in a Quality Control Manual. ATC also participates in a quarterly round robin QC/QA program for bulk samples with several accredited laboratories throughout the United States. Current and past QC/QA program results are available in the laboratory for inspection.

Accuracy and Precision

The phase abundances provided by point count may be considered within the limits of variability inherent in the method employed. The sample results are accurate to within +/-5-10 percent measured by the calibrated visual estimate method. For point counts the detection limit of 0.25% is based on one asbestos point counted over 400 non-empty points.

The analyses were supervised by Milena Lowd, Director of Laboratory Services, who has extensive experience in asbestos analysis by PLM and other methods. Please contact me regarding any questions relating to these materials at 212-353-8280 Ext. 247.

Sincerely,

Milena B. Lowd
Director of Laboratory Services

ATC Associates Inc.
104 E. 25th St., 10th Floor, New York, NY 10010-2917
(212) 353-8280 Fax (212) 353 8306

BULK ASBESTOS ANALYSIS RESULTS

Client : ATC Woburn

Project: 90712-60-001
Arvin Gym
West Point

Batch # : 10613
Date Collected : 3/12/98

SAMPLE INFORMATION	Asbestos Result	Fibrous Material	Non-Fibrous Material	NOB Result
Field # : 1 Date Analyzed: 3/16/98 Color : Tan/Black Location : 2.5 floor bldg C-1 W stair landing Type of Mat: Window caulking Homogenity : N By : MW Method : ELAP+EPA PLM	10 % CHRYSOTILE	Trace% Cellulose 10 % Fiberglass	30 % Mineral Filler 50 % Organic Binders	
Comment:				
Field # : 4 Date Analyzed: 3/16/98 Color : Off White Location : 2nd flr stair corridor #2050 Type of Mat: White coat plaster wall Homogenity : Y By : MW Method : ELAP+EPA PLM	NONE-DETECTED	Trace% Cellulose	98 % Mineral Filler 2 % Paint	
Comment:				
Field # : 5 Date Analyzed: 3/16/98 Color : Tan Location : 2nd floor stair corridor #2050 Type of Mat: Brown coat plaster wall Homogenity : Y By : MW Method : ELAP+EPA PLM	NONE-DETECTED	Trace% Cellulose	100 % Mineral Filler	
Comment:				
Field # : 6 Date Analyzed: 3/16/98 Color : White Location : 2nd floor corriodr #2014 bldg. F Type of Mat: White coat plaster wall Homogenity : Y By : MW Method : ELAP+EPA PLM	NONE-DETECTED	Trace% Cellulose	98 % Mineral Filler 2 % Paint	
Comment:				
Field # : 7 Date Analyzed: 3/16/98 Color : Tan Location : 2nd floor corridor #2014 bldg. F Type of Mat: Brown coat plaster wall Homogenity : Y By : MW Method : ELAP+EPA PLM	NONE-DETECTED	trace% Cellulose	100 % Mineral Filler	
Comment:				

Legend: TRACE = LESS THAN LIMIT OF QUANTITATION (<0.25%)
Note 1: For point counts the limit of quantitation of 0.25% is based on one asbestos point counted over 400 non-empty points.
Note 2: >1% asbestos by weight is considered an ACM (Asbestos Containing Material).

Analyst:

Reviewed and Signed for the Company by:

Director of Laboratory Services

ATC Associates Inc.
104 E. 25th St., 10th Floor, New York, NY 10010-2917
(212) 353-8280 Fax (212) 353 8306

BULK ASBESTOS ANALYSIS RESULTS

Client : ATC Woburn

Project: 90712-60-001
Arvin Gym
West Point

Batch # : 10613
Date Collected : 3/12/98

SAMPLE INFORMATION	Asbestos Result	Fibrous Material	Non-Fibrous Material	NOB Result
Field # : 8 Date Analyzed: 3/16/98 Color : Tan Location : 2nd floor corridor #2014 bldg. F Type of Mat: Tan/white 12x12 floor tile Homogenity : Y By : MW Method : ELAP+EPA PLM	3.6 % CHRYSOTILE	1.4 % Cellulose	50 % Mineral Filler 45 % Organic Binders	
Comment:				
Field # : 9 Date Analyzed: 3/16/98 Color : Black Location : 2nd floor corridor #2014 bldg. F Type of Mat: Mastic beneath floor tile Homogenity : Y By : MW/RP Method : ELAP+EPA PLM,NOB-PLM/TEM	NONE-DETECTED			72.2 % Organic 8.3 % Residue 19.5 % Carbonate
Comment:				
Field # : 11 Date Analyzed: 3/16/98 Color : Black Location : 2nd flr stair landing #1086A bldg F Type of Mat: Mastic below floor tile Homogenity : Y By : MW/RP Method : ELAP+EPA PLM,NOB-PLM/TEM	NONE-DETECTED			75.7 % Organic 8.8 % Residue 15.5 % Carbonate
Comment:				
Field # : 13 Date Analyzed: 3/16/98 Color : Black Location : 3rd flr corridor #3027 bldg. F Type of Mat: Mastic below floor tile Homogenity : Y By : MW/RP Method : ELAP+EPA PLM,NOB-PLM/TEM	NONE-DETECTED			74.1 % Organic 15.8 % Residue 10.1 % Carbonate
Comment:				
Field # : 13P Date Analyzed: 3/16/98 Color : Off White Location : 3rd flr S stairwell off of corridor Type of Mat: Mastic below floor tile Homogenity : Y By : MW Method : ELAP+EPA PLM	NONE-DETECTED	Trace% Cellulose	100 % Mineral Filler Trace% Paint	
Comment:				

Legend: TRACE = LESS THAN LIMIT OF QUANTITATION (<0.25%)
Note 1: For point counts the limit of quantitation of 0.25% is based on one asbestos point counted over 400 non-empty points.
Note 2: >1% asbestos by weight is considered an ACM (Asbestos Containing Material).

Analyst: MW & MW/RP

Reviewed and Signed for the Company by:

Director of Laboratory Services

ATC Associates Inc.
104 E. 25th St., 10th Floor, New York, NY 10010-2917
(212) 353-8280 Fax (212) 353 8306

BULK ASBESTOS ANALYSIS RESULTS

Client : ATC Woburn

Project: 90712-60-001
Arvin Gym
West Point

Batch # : 10613
Date Collected : 3/12/98

SAMPLE INFORMATION	Asbestos Result	Fibrous Material	Non-Fibrous Material	NOB Result
Field # : 14 Date Analyzed: 3/16/98 Color : Tan Location : 3rd flr S strwll off of corr bldg F Type of Mat: Plastesr wall brown coat Homogenity : Y By : MW Method : ELAP+EPA PLM	NONE-DETECTED		100 % Mineral Filler	
Comment:				
Field # : 15 Date Analyzed: 3/16/98 Color : Tan Location : 1st floor sports med #1069 bldg F Type of Mat: Beige w/ brown floor tile Homogenity : Y By : MW/RP Method : ELAP+EPA PLM,NOB-PLM/TEM	NONE-DETECTED			31.2 % Organic 3.6 % Residue 65.2 % Carbonate
Comment:				
Field # : 16 Date Analyzed: 3/16/98 Color : Black Location : 1st flr sports med office bldg F Type of Mat: Mastic Homogenity : Y By : MW Method : ELAP+EPA PLM	13 % CHRYSOTILE	7 % Cellulose 5 % Fiberglass	15 % Mineral Filler 60 % Organic Binders	
Comment:				
Field # : 17 Date Analyzed: 3/16/98 Color : Tan Location : 1st floor #1064 vestibule bldg F Type of Mat: Beige w/ tan/white floor tile Homogenity : Y By : MW/RP Method : ELAP+EPA PLM,NOB-PLM/TEM	NONE-DETECTED			29.5 % Organic 14.0 % Residue 56.5 % Carbonate
Comment:				
Field # : 17M Date Analyzed: 3/16/98 Color : Tan Location : Type of Mat: Mastic Homogenity : Y By : MW Method : ELAP+EPA PLM	NONE-DETECTED	5 % Cellulose	15 % Mineral Filler 80 % Organic Binders	
Comment: Not enough for NOB				

Legend: TRACE = LESS THAN LIMIT OF QUANTITATION (<0.25%)
Note 1: For point counts the limit of quantitation of 0.25% is based on one asbestos point counted over 400 non-empty points.
Note 2: >1% asbestos by weight is considered an ACM (Asbestos Containing Material).

Analyst: MW & MW/RP

Reviewed and Signed for the Company by:

Director of Laboratory Services

ATC Associates Inc.
104 E. 25th St., 10th Floor, New York, NY 10010-2917
(212) 353-8280 Fax (212) 353 8306

BULK ASBESTOS ANALYSIS RESULTS

Client : ATC Woburn

Project: 90712-60-001
Arvin Gym
West Point

Batch # : 10613
Date Collected : 3/12/98

SAMPLE INFORMATION	Asbestos Result	Fibrous Material	Non-Fibrous Material	NOB Result
Field # : 18 Date Analyzed: 3/16/98 Color : Tan Location : 6th floor volleyball gym Type of Mat: Ceiling tile Homogenity : Y By : MW Method : EPA-600/R-93/116 PLM	NONE-DETECTED	90 % Cellulose	10 % Mineral Filler Trace% Paint	

Comment:

Legend: TRACE = LESS THAN LIMIT OF QUANTITATION (<0.25%)
Note 1: For point counts the limit of quantitation of 0.25% is based on one asbestos point counted over 400 non-empty points.
Note 2: > 1% asbestos by weight is considered an ACM (Asbestos Containing Material).

Analyst: MW & MW

Reviewed and Signed for the Company by:

Director of Laboratory Services

BULK ASBESTOS ANALYSIS RESULTS

PLM Analysis Methodology

The samples were analyzed by industry accepted methods in accordance with EPA and ELAP methods using Polarized Light Microscopy (PLM) with dispersion staining in conjunction with stereoscopical analysis. Point counts are performed on samples regulated by these agencies. The Environmental Laboratory Approval Program (ELAP) has determined that analysis of non-friable organically bound materials (i.e. floor tile, roofing, etc.) is not reliable when performed by Polarized Light Microscopy (PLM) method. Therefore, if this analysis included that of non-friable materials under PLM and the results were negative, ATC must add this disclaimer to maintain our ELAP accreditation:

"Polarized light microscopy is not consistently reliable in detecting asbestos in floor coverings and similar non-friable organically bound materials. Quantitative Transmission Electron Microscopy is currently the only method that can be used to determine if this material can be considered or treated as non-asbestos containing".

Samples that are layered and analyzed by the gravimetric method as composites (NESHAP, AHERA) should be considered positive if results are between trace and 1%, unless every layer is analyzed separately.

ATC has the capability of performing TEM confirmation if so desired.

All bulk sample reports are checked and reviewed two times. Unused portions of samples are archived for three months unless client requests special handling. This report must not be used by the client to claim product endorsement by NIST or any agency of the U.S. government.

ATC Associates Inc. is not responsible for sample collection and analytical procedures not performed by our laboratory. This report may not be reproduced in part without the laboratory permission.

ATC Associates will not be liable for analytical results from samples that are not prepared according to the standard methods (EPA, ELAP, etc.) used by the laboratory (e.g. composite samples from different locations or samples with insufficient volumes).

Laboratory Equipment

Laboratory analysis was accomplished utilizing Olympus BH-2 Microscopes.

Quality Control

ATC Associates Inc. is accredited by NVLAP (Lab Code 1187-00) and NY State DOH ELAP (Lab ID 10879) for bulk and air fiber analyses. ATC participates in the Bulk Asbestos Sample Quality Assurance Programs for NVLAP and ELAP and maintains an in-house QC/QA program for bulk samples whereby 10% of all submitted samples are reanalyzed and documented in a Quality Control Manual. ATC also participates in a quarterly round robin QC/QA program for bulk samples with several accredited laboratories throughout the United States. Current and past QC/QA program results are available in the laboratory for inspection.

Accuracy and Precision

The phase abundances provided by point count may be considered within the limits of variability inherent in the method employed. The sample results are accurate to within +/-5-10 percent measured by the calibrated visual estimate method. For point counts the detection limit of 0.25% is based on one asbestos point counted over 400 non-empty points.

The analyses were supervised by Milena Lowd, Director of Laboratory Services, who has extensive experience in asbestos analysis by PLM and other methods. Please contact me regarding any questions relating to these materials at 212-353-8280 Ext. 247.

Sincerely,

Milena B. Lowd
Director of Laboratory Services

HYGEIA LABORATORIES, INC.

600 West Cummings Park, Suite 1900 • Woburn, MA 01801
781-933-5074 • FAX 781-938-1487

David D'Alleva
ATC Associates Inc
600 West Cummings Park
Suite 6500
Woburn, MA 01801-6350

June 13, 1998

Dear David D'Alleva,

Enclosed find the analytical results of samples tested for asbestos content using the EPA method as defined in Perkins, R.L. and B.W. Harvey, July 1993. " Method for the Determination of Asbestos in Bulk Materials " 61 pp. (EPA/600/R-93/116). The percentages of material reported are visual estimates based on the procedures defined in the reference already cited. When reported percentages of asbestos are less than ten percent, the client has the option of choosing to accept the reported concentration or request that the sample be reanalyzed using the EPA point count procedure. The results presented in this report apply to the items tested. Polarized-light microscopy is not consistently reliable in detecting asbestos in floor tiles. Confirmation by Transmission Electron Microscopy(TEM) is recommended for negative floor tile samples and is ***required*** by NYELAP.

The EPA recognized the following as asbestos: *chrysotile, crocidolite, amosite, tremolite, actinolite* and *anthophyllite*. To qualify as asbestos containing, the material must be determined to contain greater than one percent (1%) asbestos. The abbreviation "TR" or "<1" is used in the report to indicate that trace amounts of that material have been identified.

No responsibility is assumed by **Hygeia** for the accuracy of results that might be influenced by the use of improper collection techniques or equipment. Reported concentrations of minerals in bulk materials will be based solely on the analysis of materials received and data provided by client.

A copy of this report will be retained for three years from date of issue unless the client requests in writing that it be retained for a longer period. This report must not be used by the client to claim product endorsement by NVLAP or any agency of the United States Government. This report shall not be reproduced except in full, without the written approval of the laboratory.

Questions about these results should be addressed to the undersigned.
Sincerely,

Michael Manning, Senior Analyst
Mark Bushey, Optical Laboratory Supervisor

Enclosure
LAB BATCH ID: WO9704; CLIENT PROJECT ID: 10117.00001
Client #: 560

Hygeia Laboratories, Inc

Client Name:	ATC Associates Inc	Client #:	560
Batch:	WO 9704	Client Reference:	N/A
Method:	EPA/600/R-93/116	Date Received:	6/12/98
Client Project:	10117.00001	Report Date:	6/13/98

LAB ID	Field ID	Color	*ASBESTOS*						*NON-ASBESTOS*						
			CHR	AMO	CRO	ACT	TRE	ANT	FBG	MNW	CEL	HAR	SYN	OTH	NON
B104331	001	grey	0	0	0	0	0	0	0	0	0	0	0	0	100

Description: Block material on copper
Location:
Comments:

Analyzed ◉

LAB ID	Field ID	Color	*ASBESTOS*						*NON-ASBESTOS*						
			CHR	AMO	CRO	ACT	TRE	ANT	FBG	MNW	CEL	HAR	SYN	OTH	NON
B104332	002	grey	0	0	0	0	0	0	0	0	0	0	0	0	100

Description: Block material on copper
Location:
Comments:

Analyzed ◉

Asbestos Codes: CHR = Chrysotile AMO = Amosite CRO = Crocidolite ACT = Actinolite TRE = Tremolite
ANT = Anthophyllite

Non-Asbestos Codes: FBG = Fiberglass MNW = Mineral Wool CEL = Cellulose HAR = Hair SYN = Synthetic
OTH = Other NON = Non-Fibrous Minerals

* Results are in percentage.

Mark Bushey, Analyst

ATC Associates Inc.
104 E. 25th St., 10th Floor, New York, NY 10010-2917
(212) 353-8280 Fax (212) 353 8306

BULK ASBESTOS ANALYSIS RESULTS

lient : ATC Woburn

roject: 90712-60-001
Arvin Gym
West Point

Batch # : 10621
Date Collected : 3/16/98

SAMPLE INFORMATION	Asbestos Result	Fibrous Material	Non-Fibrous Material	NOB Result
Field # : 1 Date Analyzed: 3/17/98 Color : Tan Location : 4th floor mech. room bldg F Type of Mat: Spray-on Homogenity : Y By : EC Method : ELAP+EPA PLM	NONE-DETECTED	1 % Cellulose 59 % Fiberglass	40 % Mineral Filler	
Comment:				
Field # : 2 Date Analyzed: 3/17/98 Color : Tan Location : Basement mech rm F001 bldg C-1 Type of Mat: Spray-on [illegible]enity : Y By : EC [illegible] : ELAP+EPA PLM	NONE-DETECTED	3 % Cellulose 60 % Fiberglass 2 % Insects	35 % Mineral Filler	
Comment:				
Field # : 3 Date Analyzed: 3/17/98 Color : Off White Location : Sub-bsmt new stairs bldg C-1 Type of Mat: Debris Homogenity : Y By : EC Method : ELAP+EPA PLM	22 % CHRYSOTILE 22 % AMOSITE	5 % Cellulose 16 % Fiberglass	35 % Mineral Filler	
Comment:				
Field # : 4 Date Analyzed: 3/17/98 Color : Tan Location : Sub-basement SW corner bldg C-1 Type of Mat: Debris Homogenity : Y By : EC Method : ELAP+EPA PLM	22 % CHRYSOTILE	3 % Cellulose	75 % Mineral Filler	
Comment:				
Field # : 5 Date Analyzed: 3/17/98 Color : Brown Location : Bsmt corr. around intramural pool Type of Mat: Duct covering Homogenity : Y By : EC Method : ELAP+EPA PLM	NONE-DETECTED	98 % Cellulose	2 % Paint	
Comment:				

Legend: TRACE = LESS THAN LIMIT OF QUANTITATION (<0.25%)
Note 1: For point counts the limit of quantitation of 0.25% is based on one asbestos point counted over 400 non-empty points.
Note 2: >1% asbestos by weight is considered an ACM (Asbestos Containing Material).

Analyst:

Reviewed and Signed for the Company by:

Director of Laboratory Services

ATC Associates Inc.
104 E. 25th St., 10th Floor, New York, NY 10010-2917
(212) 353-8280 Fax (212) 353 8306

BULK ASBESTOS ANALYSIS RESULTS

ient : ATC Woburn

oject: 90712-60-001
Arvin Gym
West Point

Batch # : 10621
Date Collected : 3/16/98

SAMPLE INFORMATION	Asbestos Result	Fibrous Material	Non-Fibrous Material	NOB Result
ield # : 6 Date Analyzed: 3/17/98 olor : Tan ocation : Bsmt corr. around int. pool ype of Mat: Duct insulation omogenity : Y By : EC ethod : ELAP+EPA PLM	80 % CHRYSOTILE	3 % Cellulose	17 % Mineral Filler	
Comment:				
ield # : 7 Date Analyzed: 3/17/98 olor : Black/White ocation : 4th floor mech room bldg. F ype of Mat: Vibration dampening omogenity : N By : EC/RP ethod : ELAP+EPA PLM,NOB-PLM/TEM	NONE-DETECTED			22.5 % Organic 63.6 % Residue 13.9 % Carbonate
Comment: Composite analysis				
Field # : 8 Date Analyzed: 3/17/98 Color : Off White Location : 1st floor mech. room bldg. B Type of Mat: Pipe insulation Homogenity : Y By : EC Method : ELAP+EPA PLM	6 % CHRYSOTILE 18 % AMOSITE	1 % Cellulose 10 % Fiberglass	65 % Mineral Filler	
Comment:				

Legend: TRACE = LESS THAN LIMIT OF QUANTITATION (<0.25%)
Note 1: For point counts the limit of quantitation of 0.25% is based on one asbestos point counted over 400 non-empty points.
Note 2: > 1% asbestos by weight is considered an ACM (Asbestos Containing Material).

Analyst:

Reviewed and Signed for the Company by:

Director of Laboratory Services

BULK ASBESTOS ANALYSIS RESULTS

PLM Analysis Methodology

The samples were analyzed by industry accepted methods in accordance with EPA and ELAP methods using Polarized Light Microscopy (PLM) with dispersion staining in conjunction with stereoscopical analysis. Point counts are performed on samples regulated by these agencies. The Environmental Laboratory Approval Program (ELAP) has determined that analysis of non-friable organically bound materials (i.e. floor tile, roofing, etc.) is not reliable when performed by Polarized Light Microscopy (PLM) method. Therefore, if this analysis included that of non-friable materials under PLM and the results were negative, ATC must add this disclaimer to maintain our ELAP accreditation:

> "Polarized light microscopy is not consistently reliable in detecting asbestos in floor coverings and similar non-friable organically bound materials. Quantitative Transmission Electron Microscopy is currently the only method that can be used to determine if this material can be considered or treated as non-asbestos containing".

Samples that are layered and analyzed by the gravimetric method as composites (NESHAP, AHERA) should be considered positive if results are between trace and 1%, unless every layer is analyzed separately.

ATC has the capability of performing TEM confirmation if so desired.

All bulk sample reports are checked and reviewed two times. Unused portions of samples are archived for three months unless client requests special handling. This report must not be used by the client to claim product endorsement by NIST or any agency of the U.S. government.

ATC Associates Inc. is not responsible for sample collection and analytical procedures not performed by our laboratory. This report may not be reproduced in part without the laboratory permission.

ATC Associates will not be liable for analytical results from samples that are not prepared according to the standard methods (EPA, ELAP, etc.) used by the laboratory (e.g. composite samples from different locations or samples with insufficient volumes).

Laboratory Equipment

Laboratory analysis was accomplished utilizing Olympus BH-2 Microscopes.

Quality Control

ATC Associates Inc. is accredited by NVLAP (Lab Code 1187-00) and NY State DOH ELAP (Lab ID 10879) for bulk and air fiber analyses. ATC participates in the Bulk Asbestos Sample Quality Assurance Programs for NVLAP and ELAP and maintains an in-house QC/QA program for bulk samples whereby 10% of all submitted samples are reanalyzed and documented in a Quality Control Manual. ATC also participates in a quarterly round robin QC/QA program for bulk samples with several accredited laboratories throughout the United States. Current and past QC/QA program results are available in the laboratory for inspection.

Accuracy and Precision

The phase abundances provided by point count may be considered within the limits of variability inherent in the method employed. The sample results are accurate to within +/-5-10 percent measured by the calibrated visual estimate method. For point counts the detection limit of 0.25% is based on one asbestos point counted over 400 non-empty points.

The analyses were supervised by Milena Lowd, Director of Laboratory Services, who has extensive experience in asbestos analysis by PLM and other methods. Please contact me regarding any questions relating to these materials at 212-353-8280 Ext. 247.

Sincerely,

Milena B. Lowd
Director of Laboratory Services

HYGEIA LABORATORIES, INC.

00 West Cummings Park, Suite 1900 • Woburn, MA 01801
81 -5074 • FAX 781-938-1487

May 29, 1998

David D'Alleva
ATC Associates Inc
600 West Cummings Park
Suite 6500
Woburn, MA 01801-6350

Dear David D'Alleva,

Enclosed find the analytical results of samples tested for asbestos content using the EPA method as defined in Perkins, R.L. and B.W. Harvey, July 1993. " Method for the Determination of Asbestos in Bulk Materials " 61 pp. (EPA/600/R-93/116). The percentages of material reported are visual estimates based on the procedures defined in the reference already cited. When reported percentages of asbestos are less than ten percent, the client has the option of choosing to accept the reported concentration or request that the sample be reanalyzed using the EPA point count procedure. The results presented in this report apply to the items tested. Polarized-light microscopy is not consistently reliable in detecting asbestos in floor tiles. Confirmation by Transmission Electron Microscopy(TEM) is recommended for negative floor tile samples and is ***required*** by NYELAP.

The EPA recognized the following as asbestos: *chrysotile, crocidolite, amosite, tremolite, actinolite* and *anthophyllite*. To qualify as asbestos containing, the material must be determined to contain greater than one percent (1%) asbestos. The abbreviation "TR" or "<1" is used in the report to indicate that trace amounts of that material have been identified.

No responsibility is assumed by **Hygeia** for the accuracy of results that might be influenced by the use of improper collection techniques or equipment. Reported concentrations of minerals in bulk materials will be based solely on the analysis of materials received and data provided by client.

A copy of this report will be retained for three years from date of issue unless the client requests in writing that it be retained for a longer period. This report must not be used by the client to claim product endorsement by NVLAP or any agency of the United States Government. This report shall not be reproduced except in full, without the written approval of the laboratory.

Questions about these results should be addressed to the undersigned.
Sincerely,

Michael Manning, Senior Analyst
Mark Bushey, Optical Laboratory Supervisor

Enclosure
LAB BATCH ID: WO9523; CLIENT PROJECT ID: 10117.00001
Client #: 560

Hygeia Laboratories, Inc

ATC Associates Inc
WO 9523
EPA/600/R-93/116
Project: 10117.00001

Client #: 560
Client Reference: Sasalsi Assoc./USMA Arvin Gym
Date Received: 5/19/98
Report Date: 5/29/98

	Field ID	Color	ASBESTOS						NON-ASBESTOS						
			CHR	AMO	CRO	ACT	TRE	ANT	FBG	MNW	CEL	HAR	SYN	OTH	NON
17	01A	Black	0	0	0	0	0	0	0	0	0	0	0	0	100

tion: Natatorium wall
n: Bldg. A (F) - Old
ents:
Analyzed

ID	Field ID	Color	ASBESTOS						NON-ASBESTOS						
			CHR	AMO	CRO	ACT	TRE	ANT	FBG	MNW	CEL	HAR	SYN	OTH	NON
618	02A	Black	0	0	0	0	0	0	0	0	20	0	0	0	80

iption: North foundation wall
ion: Bldg. B
nents:
Analyzed

tos Codes: CHR = Chrysotile AMO = Amosite CRO = Crocidolite ACT = Actinolite TRE = Tremolite
ANT = Anthophyllite

Asbestos Codes: FBG = Fiberglass MNW = Mineral Wool CEL = Cellulose HAR = Hair SYN = Synthetic
OTH = Other NON = Non-Fibrous Minerals

1 ts are in percentage.

hael Manning, Analyst

INTENTIONALLY BLANK